BROCHURE

Baldor-Reliance® chiller/cooling tower

Reliability for wet and humid environments

Chiller/cooling tower motors
HVAC motors

Protection against environmental factors is key to reliability and extended motor performance. Baldor-Reliance chiller/cooling tower motors offer a complete package in a both TEAO and TEFC designs with additional sealing to minimize moisture entry points. A robust cast iron frame and corrosion resistant hardware stand up to the harshest environments. These motors are inverter duty and have internal bearing protection installed.

Applications:
For use in the airstream on chillers and cooling towers. Designed for wet, high humidity environments.

Electrical features:
- 1.15 Service Factor
- Moisture resistant copper windings
- 1 - 100 Hp NEMA Premium® ratings available
- Suitable for inverter use per NEMA MG1 Part 31.4.4.2

Mechanical features:
- TEAO and TEFC design
- AEGIS® internal bearing protection ring installed on -G extensions
- Space heaters
- Stainless steel hardware and nameplate
- Corrosion resistant finish
- Moisture resistant grease
- Severe duty cast iron construction*
- IP55 ingress protection
- Four barrier shaft sealing system on drive-end
  - Lip contact seal
  - V-ring slinger
  - Dome slinger
  - Double sealed bearings
- Strategically placed drains for optimal moisture removal
- Gaskets on conduit box for increased ingress protection

Chiller/cooling tower motors

TEAO enclosure:
TEAO enclosure eliminates the external fan and the need for a motor opening in the opposite drive end. Motors use the application to their advantage by utilizing the ventilation in the application.

Space heaters:
Heating strips are used in the insulation to prevent moisture build-up by warming the motor's electrical windings. Condensation occurs when humid air comes in contact with the cool metal of motor, which, over time will corrode and degrade the performance.

Lead separator gasket:
The lead separator gasket serves as two main functions. It prevents moisture from entering the stator via the conduit box and secondly it separates and protects the leads.

Conduit box lid gasket:
The gasket serves as a moisture barrier for the conduit box. It blocks moisture from entering, and it ensures a tight seal every time the conduit box is closed.

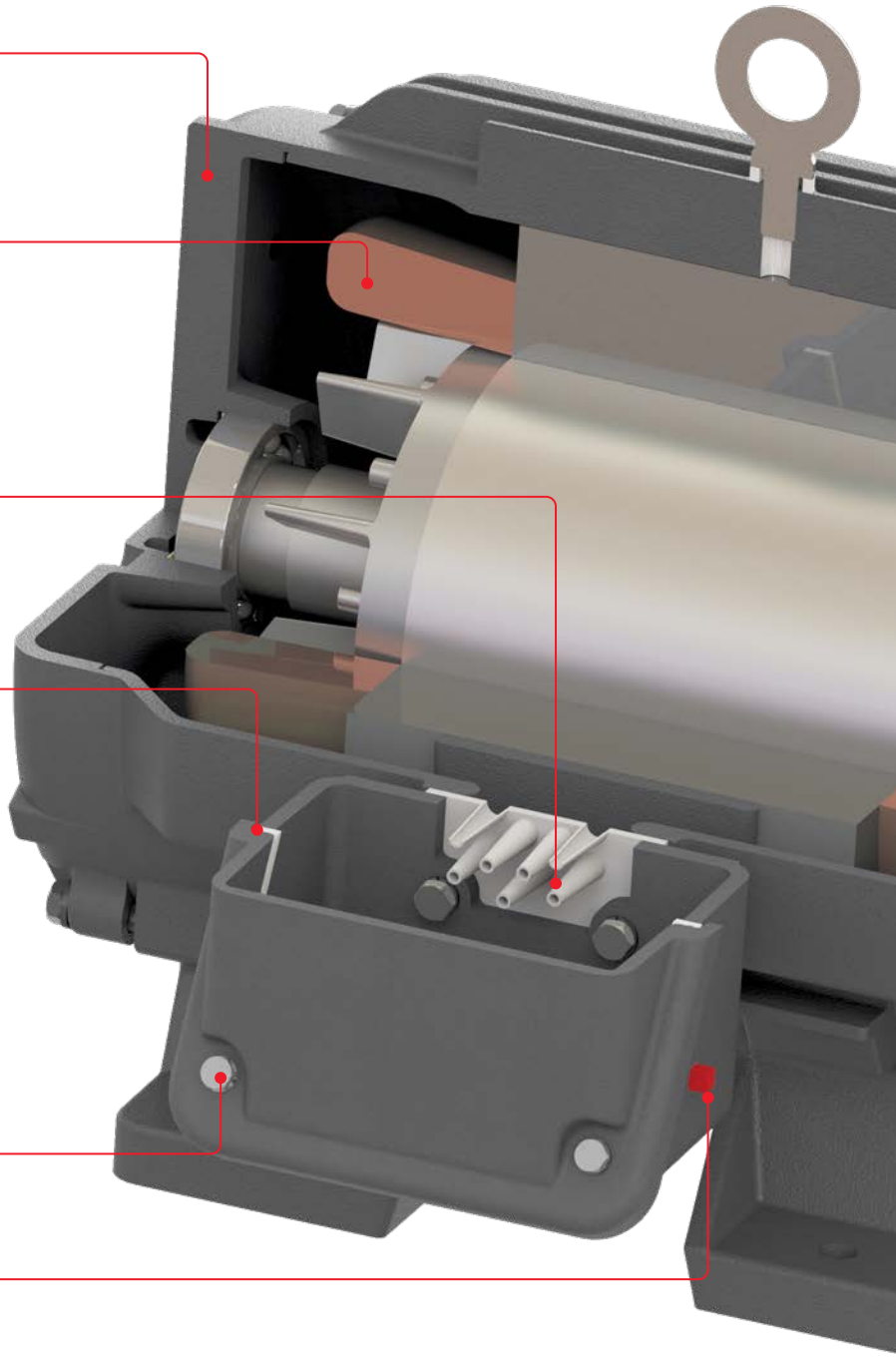

Stainless steel hardware:
Stainless steel hardware is essential for humid or wet environments.

Conduit box plugs:
Threaded plugs at each end of the conduit box makes the removal of moisture simple.

Horizontal drains on each end:
T-drains conveniently located at each end of the motor allow for condensation to escape.

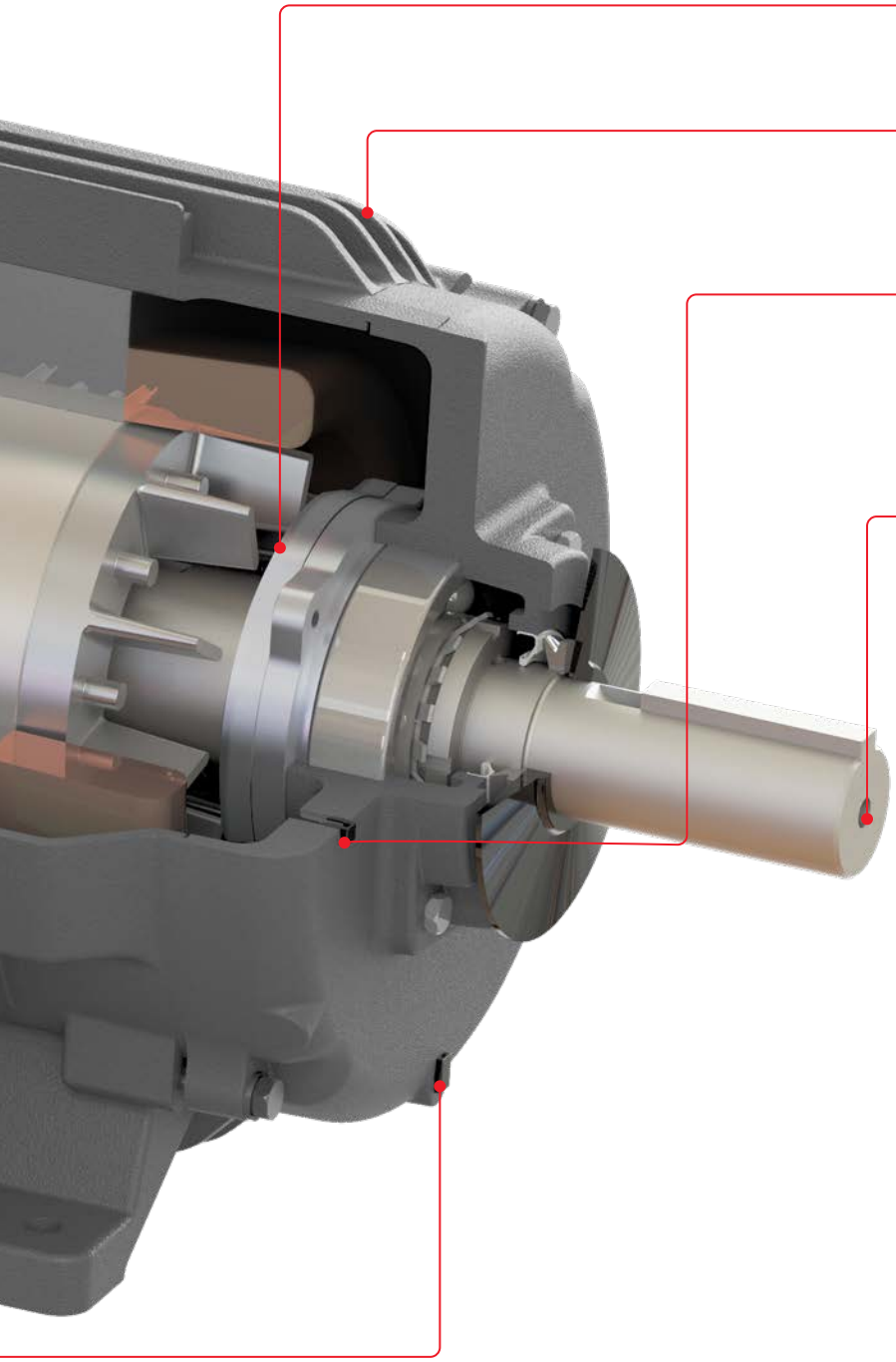

AEGIS bearing protection ring
For protection against shaft currents and designed for longevity with a 3 year warranty

Cast iron construction:
Cast Iron construction with an epoxy paint finish gives the motor a robust advantage over the corrosive environment.

Face drains on each end:
For vertical shaft up or down applications. Two face drains at each end prevent moisture from building up inside the motor. T-drains are strategically placed to allow efficient drainage in the motor.

Vertical lifting provisions:
In addition to the eyebolt, the motors come equipped for vertical lifting. A tapped drive end shaft and opposite drive end endplate allow the motor to be lifted vertically. The eyebolt can be easily installed for any desirable lifting configuration.

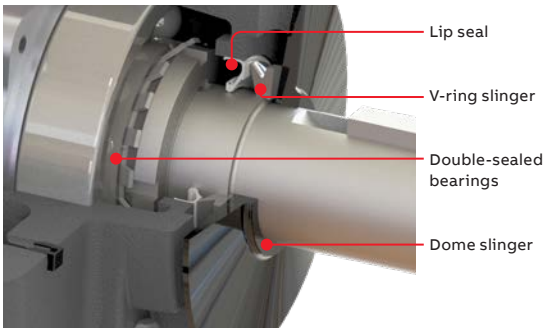

A four layer barrier system consisting of a lip contact seal, v-ring slinger, double-sealed bearings, and dome slinger provide protection against the ingress of water when the motor is mounted in any position.

Chiller/cooling tower motor, three phase, TEFC, shaft ground

1 thru 100 Hp

AEGIS INSTALLED

Hp	RPM	NEMA frame	Catalog number	"C" dim.	Aprx. wt. (lb.)	Full load efficiency (a)	Voltage	Full load amps
1	1800	143T	ECTM3581T-G	12.54	55	85.5	230/460	1.5
			ECTM3581T-5G	12.54	55	85.5	575	1.5
	1200	145T	ECTM3582T-G	12.54	56	82.5	230/460	1.7
			ECTM3582T-5G	12.54	56	82.5	575	1.7
1.5	1800	145T	ECTM3584T-G	12.54	61	86.5	230/460	2.3
			ECTM3584T-5G	12.54	61	86.5	575	2.3
	1200	182T	ECTM3667T-G	15.24	99	87.5	230/460	2.5
			ECTM3667T-5G	15.24	99	87.5	575	2.5
2	1800	145T	ECTM3587T-G	12.54	62	86.5	230/460	2.9
			ECTM3587T-5G	12.54	62	86.5	575	2.9
	1200	184T	ECTM3664T-G	15.24	123	88.5	230/460	3.15
			ECTM3664T-5G	15.24	123	88.5	575	3.15
3	1800	182T	ECTM3661T-G	15.24	105	89.5	230/460	4.1
			ECTM3661T-5G	15.24	105	89.5	575	4.1
	1200	213T	ECTM3764T-G	18.45	173	89.5	230/460	4.5
			ECTM3764T-5G	18.45	173	89.5	575	4.5
5	1800	184T	ECTM3665T-G	15.24	107	89.5	230/460	6.6
			ECTM3665T-5G	15.24	107	89.5	575	6.6
	1200	215T	ECTM3768T-G	18.45	195	89.5	230/460	7.4
			ECTM3768T-5G	18.45	195	89.5	575	7.4
7.5	1800	213T	ECTM3770T-G	18.45	170	91.7	230/460	9.5
			ECTM3770T-5G	18.45	170	91.7	575	9.5
	1200	254T	ECTM2276T-G	23.28	278	91	230/460	11
			ECTM2276T-5G	23.28	278	91	575	11
10	1800	215T	ECTM3774T-G	18.45	232	91.7	230/460	12.2
			ECTM3774T-5G	18.45	232	91.7	575	12.2
	1200	256T	ECTM2332T-G	23.28	290	91	230/460	14.1
			ECTM2332T-5G	23.28	290	91	575	14.1
15	1800	254T	ECTM2333T-G	23.28	270	92.4	230/460	18.1
			ECTM2333T-5G	23.28	270	92.4	575	18.1
	1200	284T	ECTM4100T-G	27.76	391	91.7	230/460	21
			ECTM4100T-5G	27.76	391	91.7	575	21

(a) Full load efficiency is at 1800 RPM and low speed efficiency is not published.
Red catalog number indicates NEW product.

Cast iron frame

AEGIS INSTALLED

Hp	RPM	NEMA frame	Catalog number	"C" dim.	Aprx. wt. (lb.)	Full load efficiency (a)	Voltage	Full load amps
20	1800	256T	ECTM2334T-G	23.30	289	93	230/460	24
			ECTM2334T-5G	23.30	289	93	575	24
	1200	286T	ECTM4102T-G	27.76	399	91.7	230/460	27
			ECTM4102T-5G	27.76	399	91.7	575	27
25	1800	284T	ECTM4103T-G	27.76	388	93.6	230/460	30
			ECTM4103T-5G	27.76	388	93.6	575	30
	1200	324T	ECTM4111T-G	30.39	445	93	230/460	32
			ECTM4111T-5G	30.39	445	93	575	32
30	1800	286T	ECTM4104T-G	27.76	430	93.6	230/460	38
			ECTM4104T-5G	27.76	430	93.6	575	38
	1200	326T	ECTM4117T-G	30.28	604	93	230/460	39
			ECTM4117T-5G	30.28	604	93	575	39
40	1800	324T	ECTM4110T-G	30.28	570	94.1	230/460	48
			ECTM4110T-5G	30.28	570	94.1	575	48
	1200	364T	ECTM4308T-G	33.48	899	94.1	230/460	49.4
			ECTM4308T-5G	33.48	899	94.1	575	49.4
50	1800	326T	ECTM4115T-G	30.28	650	94.5	230/460	58
			ECTM4115T-5G	30.28	650	94.5	575	58
	1200	365T	ECTM4312T-G	33.48	902	94.1	230/460	61.7
			ECTM4312T-5G	33.48	902	94.1	575	61.7
60	1800	364T	ECTM4314T-G	33.44	912	95	230/460	67.8
			ECTM4314T-5G	33.44	912	95	575	67.8
	1200	404T	ECTM4403T-G	38.04	1187	95	230/460	69
			ECTM4403T-5G	38.04	1187	95	575	69
75	1800	365T	ECTM4316T-G	33.48	955	95.4	230/460	84.9
			ECTM4316T-5G	33.48	955	95.4	575	84.9
	1200	405T	ECTM4404T-G	38.04	1229	94.5	230/460	86.8
			ECTM4404T-5G	38.04	1229	94.5	575	86.8
100	1800	405T	ECTM4400T-4G	38.04	1203	95.4	230/460	112
	1200	444T	ECTM4409T-4G	44.75	1828	95	230/460	119

(a) Full load efficiency is at 1800 RPM and low speed efficiency is not published.
Red catalog number indicates NEW product.

Cast iron frame

Chiller/cooling tower, three phase, TEAO, with internal shaft ground

3 thru 60 Hp

AEGIS INSTALLED

Hp	RPM	NEMA frame	Catalog number	"C" dim.	Aprx. wt. (lb.)	Full load efficiency	Voltage	Full load amps	Airflow ft./min.
3	1800	184	**ECTM3611T-G-AO**	16.32	116	87.5	230/380-415	4.8	1200
	1200	213T	**ECTM3704T-G-AO**	17.45	140	89.5	230/460	4.6	1200
5	1800	184T	**ECTM3615T-G-AO**	17.45	134	88.5	230/380-415	7.4	1200
		184T	**ECTM3665T-G-AO**	13.68	100	87.5	208-230/460	6.9	1200
	1200	213T	**ECTM3708T-G-AO**	18.95	185	89.5	230/460	7.2	1200
		215T	**ECTM3768T-G-AO**	19.54	206	87.5	208-230/460	7.5	1200
7-1/2	1800	213T	**ECTM3770T-G-AO**	19.54	164	89.5	208-230/460	10.3	1500
	1200	254T	**ECTM2276T-G-AO**	22.16	179	89.5	208-230/460	10.9	1500
10	1800	215T	**ECTM3774T-G-AO**	19.54	170	89.5	208-230/460	13	1500
	1200	256T	**ECTM2332T-G-AO**	23	275	89.5	230/460	14.4	1500
15	1800	254T	**ECTM2333T-G-AO**	22.16	236	91	208-230/460	18.5	1500
	1200	284T	**ECTM4100T-G-AO**	25.63	345	91.7	230/460	20	1500
20	1800	256T	**ECTM2334T-G-AO**	23.91	245	91	230/460	25	1500
25	1800	284T	**ECTM4103T-G-AO**	25.78	343	92.4	230/460	29	1500
30	1800	286T	**ECTM4104T-G-AO**	25.78	363	92.4	230/460	36	1500
40	1800	324T	**ECTM4110T-G-AO**	28.38	529	93	230/460	47	2000
50	1800	326T	**ECTM4115T-G-AO**	28.38	598	94.5	230/460	58	2000
60	1800	364T	**ECTM4314T-G-AO**	29.7	835	95	230/460	68	2000

Red catalog number indicates NEW product.

Cast iron frame

Chiller/cooling tower motor

Cast iron, three phase

Hp	RPM	NEMA frame	Catalog number	"C" dim.	Aprx. wt. (lb.)	Full load eff.	Voltage	Full load amps	Airflow ft./min.
TEAO - Standard efficient									
5	1800	184T	**CTM3665T**	13.68	105	87.5	208-230/460	6.9	1200
	1200	215T	**CTM3768T**	19.54	211	87.5	208-230/460	7.5	1200
7.5	1800	213T	**CTM3770T**	19.54	164	89.5	208-230/460	10.3	1500
	1200	254T	**CTM2276T**	22.16	229	89.5	208-230/460	10.9	1500
10	1800	215T	**CTM3774T**	19.54	169	89.5	208-230/460	13	1500
	1200	256T	**CTM2332T**	23.00	290	89.5	230/460	14.4	1500
15	1800	254T	**CTM2333T**	22.16	236	91.0	208-230/460	18.5	1500
20	1800	256T	**CTM2334T**	23.91	245	91.0	230/460	25	1500
25	1800	284T	**CTM4103T**	25.78	315	92.4	230/460	29	1500
30	1800	286T	**CTM4104T**	25.78	322	92.4	230/460	36	1500
40	1800	324T	**CTM4110T**	28.38	554	93.0	230/460	47	2000
TEAO - Premium efficient									
3	1800	213T	**ECTM3611T-57**	16.32	116	87.5	230/380-415	4.8	1200
	1200	213T	**ECTM3704T**	17.45	140	89.5	230/460	4.6	1200
5	1800	213T	**ECTM3615T-57**	17.45	134	88.5	230/380-415	7.4	1200
		184T	**ECTM3665T**	13.68	119	89.5	208-230/460	6.6	1200
	1200	215T	**ECTM3768T**	19.54	226	90.2	230/460	7.3	1200
7.5	1800	213T	**ECTM3770T**	19.54	170	91.7	208-230/460	9.5	1500
	1200	254T	**ECTM2276T**	23.00	302	91.0	230/460	11	1500
10	1800	213T	**ECTM3774T**	19.54	231	91.7	208-230/460	12.2	1500
	1200	256T	**ECTM2332T**	23.00	322	91.0	230/460	14.4	1500
15	1800	254T	**ECTM2333T**	23.00	268	92.4	230/460	18.1	1500
	1200	284T	**ECTM4100T**	25.63	382	91.7	230/460	20	1500
20	1800	256T	**ECTM2334T**	23.00	303	93.0	230/460	24	1500
25	1800	284T	**ECTM4103T**	25.63	420	93.6	230/460	30	1500
30	1800	286T	**ECTM4104T**	25.63	437	93.6	230/460	38	1500
40	1800	324T	**ECTM4110T**	28.38	578	94.1	230/460	48	1500
50	1800	326T	**ECTM4115T**	28.38	700	94.5	230/460	58	2000
60	1800	364T	**ECTM4314T**	29.70	835	95.0	230/460	68	2000
Chiller/Cooling tower motor, two speed, TEFC									
10/2.5	1800/900	215T	**CTM1760T**	19.32	210	89.5	460	14.3	
15/3.75	1800/900	254T	**CTM1761T**	24.78	290	90.2	460	18.1	
20/5	1800/900	256T	**CTM1762T**	24.78	299	91	460	23.6	
25/6.25	1800/900	284T	**CTM1763T**	27.93	342	91.7	460	32	
30/7.5	1800/900	286T	**CTM1764T**	27.93	333	91.7	460	36	
40/10	1800/900	324T	**CTM1765T**	30.28	629	92.4	460	48	
50/12.5	1800/900	326T	**CTM1766T**	30.28	657	90.2	460	63	
60/15	1800/900	364T	**CTM1767T**	33.44	836	93	460	69.6	

Cast iron frame

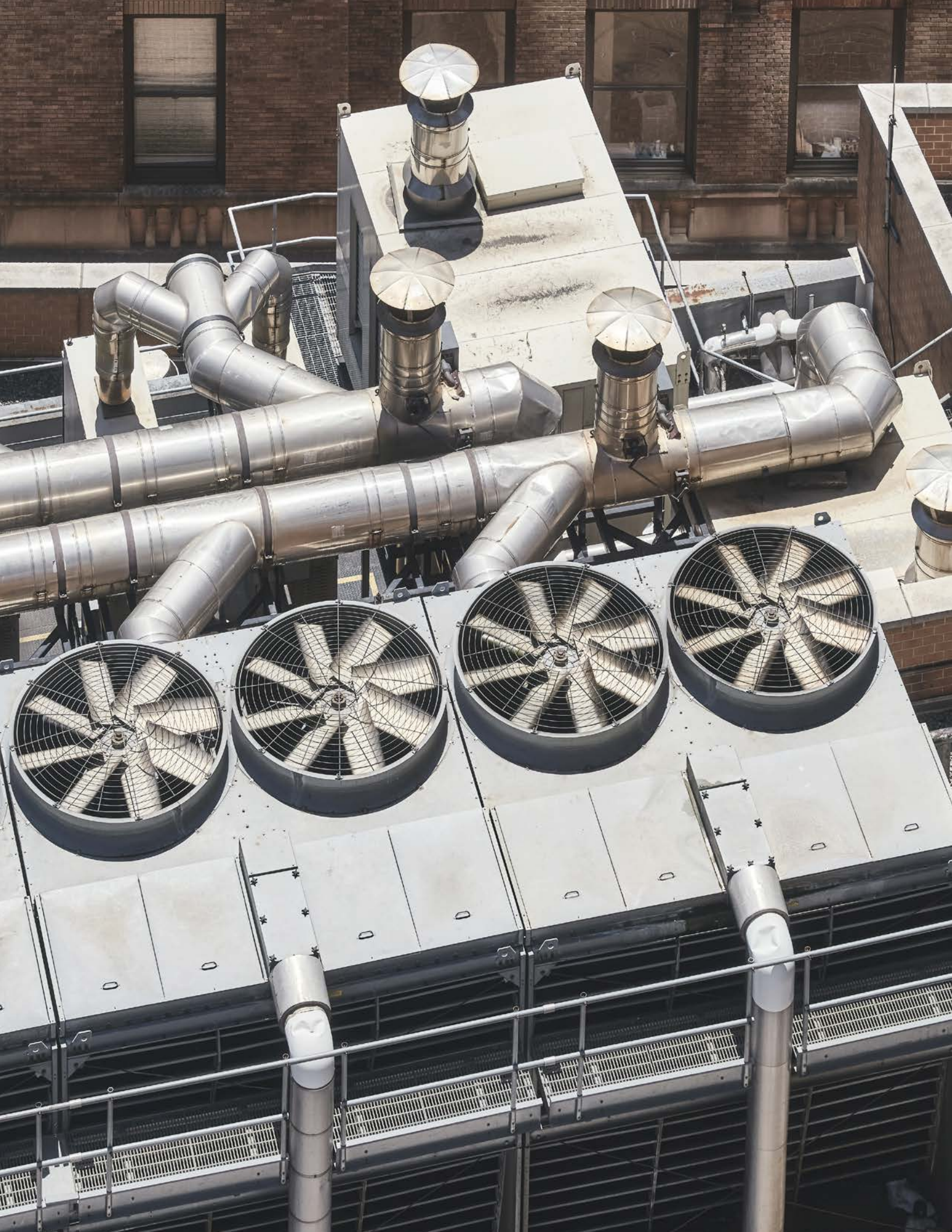

—

ABB Motors and Mechanical Inc.
5711 R.S. Boreham, Jr. Street
Fort Smith, AR 72901
Ph: 1.479.646.4711

new.abb.com/motors-generators

9AKK107623 02.2022 Printshop 1,000