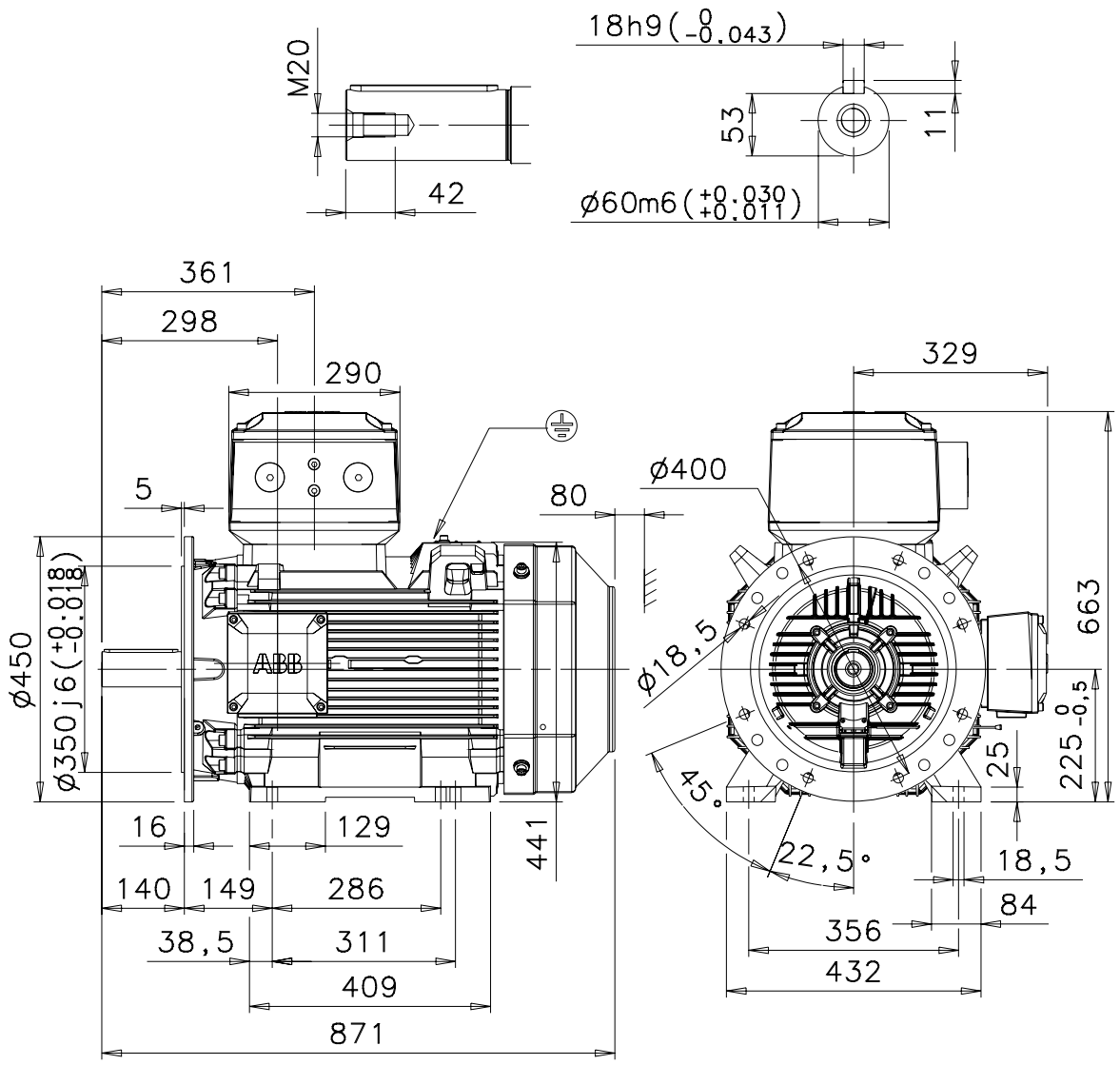

Additional information:

Dimension Print	Motor Type: M3JP 225SM_4-12 B35, V35 (G)	Document No: 3GZF500222-55 B 14 JP 225 A
Description: SQUIRREL CAGE MOTOR WITH SEPARATE TERMINAL BOX.		

Unit:	ABB Oy, Motors and Generators	Issued by:	M.Kontio	Replaces:
Date:	23.06.2015	Approved by:	T.Kuusisto	Replaced by:

ABB Oy	Customer Reference:	ABB