Relion® 670 series

Line differential protection RED670 2.0 ANSI Application Manual

Power and productivity
for a better world™

Document ID: 1MRK 505 307-UUS
Issued: May 2014
Revision: -
Product version: 2.0

Copyright

Trademarks

Warranty

Please inquire about the terms of warranty from your nearest ABB representative.

Disclaimer

The data, examples and diagrams in this manual are included solely for the concept or product description and are not to be deemed as a statement of guaranteed properties. All persons responsible for applying the equipment addressed in this manual must satisfy themselves that each intended application is suitable and acceptable, including that any applicable safety or other operational requirements are complied with. In particular, any risks in applications where a system failure and/or product failure would create a risk for harm to property or persons (including but not limited to personal injuries or death) shall be the sole responsibility of the person or entity applying the equipment, and those so responsible are hereby requested to ensure that all measures are taken to exclude or mitigate such risks.

This document has been carefully checked by ABB but deviations cannot be completely ruled out. In case any errors are detected, the reader is kindly requested to notify the manufacturer. Other than under explicit contractual commitments, in no event shall ABB be responsible or liable for any loss or damage resulting from the use of this manual or the application of the equipment.

Conformity

This product complies with the directive of the Council of the European Communities on the approximation of the laws of the Member States relating to electromagnetic compatibility (EMC Directive 2004/108/EC) and concerning electrical equipment for use within specified voltage limits (Low-voltage directive 2006/95/EC). This conformity is the result of tests conducted by ABB in accordance with the product standard EN 60255-26 for the EMC directive, and with the product standards EN 60255-1 and EN 60255-27 for the low voltage directive. The product is designed in accordance with the international standards of the IEC 60255 series and ANSI C37.90.

Table of contents

Section 1 Introduction

1.1 This manual

The application manual contains application descriptions and setting guidelines sorted per function. The manual can be used to find out when and for what purpose a typical protection function can be used. The manual can also provide assistance for calculating settings.

1.2 Intended audience

This manual addresses the protection and control engineer responsible for planning, pre-engineering and engineering.

The protection and control engineer must be experienced in electrical power engineering and have knowledge of related technology, such as protection schemes and communication principles.

1.3 Product documentation

1.3.1 Product documentation set

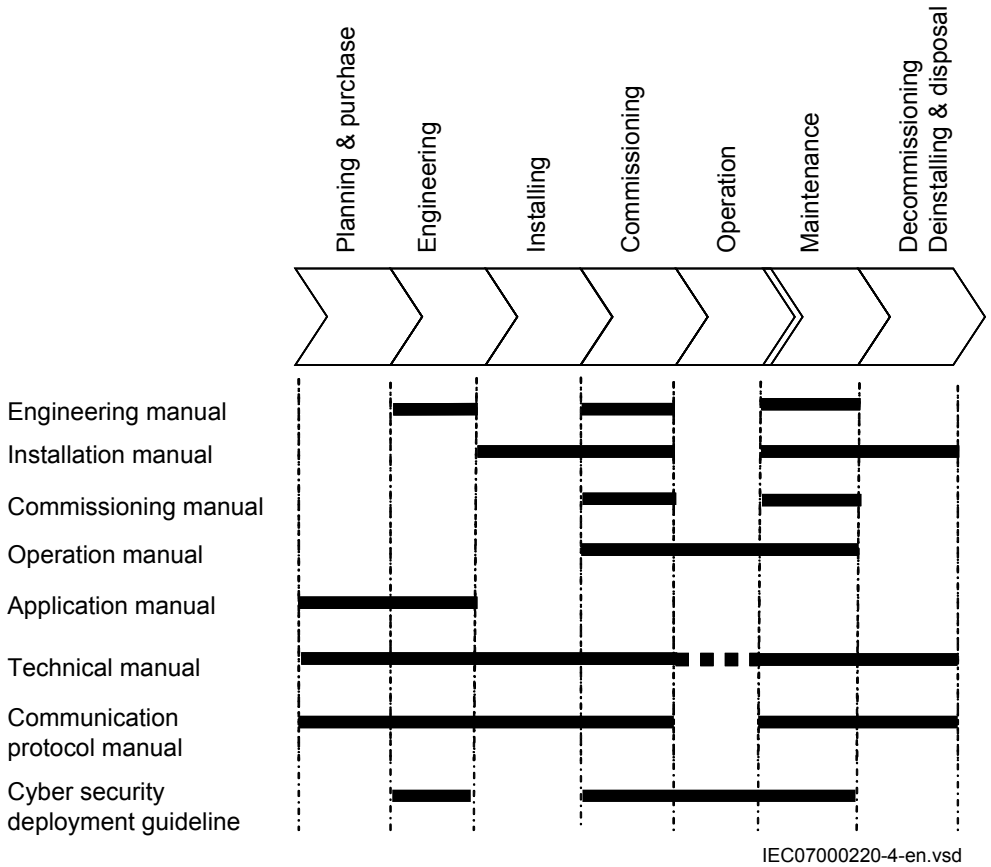

Figure 1: The intended use of manuals throughout the product lifecycle

The engineering manual contains instructions on how to engineer the IEDs using the various tools available within the PCM600 software. The manual provides instructions on how to set up a PCM600 project and insert IEDs to the project structure. The manual also recommends a sequence for the engineering of protection and control functions, LHMI functions as well as communication engineering for IEC 60870-5-103, IEC 61850 and DNP3.

The installation manual contains instructions on how to install the IED. The manual provides procedures for mechanical and electrical installation. The chapters are organized in the chronological order in which the IED should be installed.

The commissioning manual contains instructions on how to commission the IED. The manual can also be used by system engineers and maintenance personnel for assistance during the testing phase. The manual provides procedures for the checking of external circuitry and energizing the IED, parameter setting and configuration as well as verifying settings by secondary injection. The manual describes the process of testing an IED in a substation which is not in service. The chapters are organized in the chronological order in which the IED should be commissioned. The relevant procedures may be followed also during the service and maintenance activities.

The operation manual contains instructions on how to operate the IED once it has been commissioned. The manual provides instructions for the monitoring, controlling and setting of the IED. The manual also describes how to identify disturbances and how to view calculated and measured power grid data to determine the cause of a fault.

The application manual contains application descriptions and setting guidelines sorted per function. The manual can be used to find out when and for what purpose a typical protection function can be used. The manual can also provide assistance for calculating settings.

The technical manual contains application and functionality descriptions and lists function blocks, logic diagrams, input and output signals, setting parameters and technical data, sorted per function. The manual can be used as a technical reference during the engineering phase, installation and commissioning phase, and during normal service.

The communication protocol manual describes the communication protocols supported by the IED. The manual concentrates on the vendor-specific implementations.

The point list manual describes the outlook and properties of the data points specific to the IED. The manual should be used in conjunction with the corresponding communication protocol manual.

The cyber security deployment guideline describes the process for handling cyber security when communicating with the IED. Certification, Authorization with role based access control, and product engineering for cyber security related events are described and sorted by function. The guideline can be used as a technical reference during the engineering phase, installation and commissioning phase, and during normal service.

1.3.2 Document revision history

Document revision/date	History
-/May 2014	First release

1.3.3 Related documents

Documents related to RED670	Identify number
Application manual	1MRK 505 307-UUS
Commissioning manual	1MRK 505 309-UUS
Product guide	1MRK 505 310-BUS
Technical manual	1MRK 505 308-UUS
Type test certificate	1MRK 505 310-TUS

670 series manuals	Identify number
Operation manual	1MRK 500 118-UUS
Engineering manual	1MRK 511 308-UUS
Installation manual	1MRK 514 019-UUS
Communication protocol manual, DNP3	1MRK 511 301-UUS
Communication protocol manual, IEC 61850 Edition 2	1MRK 511 303-UUS
Accessories guide	1MRK 514 012-BUS
Connection and Installation components	1MRK 513 003-BEN
Test system, COMBITEST	1MRK 512 001-BEN

1.4 Document symbols and conventions

1.4.1 Symbols

The electrical warning icon indicates the presence of a hazard which could result in electrical shock.

The warning icon indicates the presence of a hazard which could result in personal injury.

The caution hot surface icon indicates important information or warning about the temperature of product surfaces.

The caution icon indicates important information or warning related to the concept discussed in the text. It might indicate the presence of a hazard which could result in corruption of software or damage to equipment or property.

The information icon alerts the reader of important facts and conditions.

The tip icon indicates advice on, for example, how to design your project or how to use a certain function.

Although warning hazards are related to personal injury, it is necessary to understand that under certain operational conditions, operation of damaged equipment may result in degraded process performance leading to personal injury or death. It is important that the user fully complies with all warning and cautionary notices.

1.4.2 Document conventions

- Abbreviations and acronyms in this manual are spelled out in the glossary. The glossary also contains definitions of important terms.
- Push button navigation in the LHMI menu structure is presented by using the push button icons.
  For example, to navigate between the options, use ↑ and ↓.
- HMI menu paths are presented in bold.
  For example, select **Main menu/Settings**.
- LHMI messages are shown in Courier font.
  For example, to save the changes in non-volatile memory, select `Yes` and press ↵.
- Parameter names are shown in italics.
  For example, the function can be enabled and disabled with the *Operation* setting.
- Each function block symbol shows the available input/output signal.
  - the character ^ in front of an input/output signal name indicates that the signal name may be customized using the PCM600 software.
  - the character * after an input/output signal name indicates that the signal must be connected to another function block in the application configuration to achieve a valid application configuration.
- Logic diagrams describe the signal logic inside the function block and are bordered by dashed lines.

- Signals in frames with a shaded area on their right hand side represent setting parameter signals that are only settable via the PST or LHMI.
- If an internal signal path cannot be drawn with a continuous line, the suffix -int is added to the signal name to indicate where the signal starts and continues.
- Signal paths that extend beyond the logic diagram and continue in another diagram have the suffix ”-cont.”

- Dimensions are provided both in inches and mm. If it is not specifically mentioned then the dimension is in mm.

1.4.3 IEC61850 edition 1 / edition 2 mapping

Table 1: IEC61850 edition 1 / edition 2 mapping

Function block name	Edition 1 logical nodes	Edition 2 logical nodes
AEGPVOC	AEGGAPC	AEGPVOC
AGSAL	SECLLN0 AGSAL	AGSAL
ALMCALH		ALMCALH
ALTIM		ALTIM
ALTMS		ALTMS
ALTRK		ALTRK
BCZSPDIF	BCZSPDIF	BCZSPDIF
BCZTPDIF	BCZTPDIF	BCZTPDIF
BDCGAPC	SWSGGIO	BDCGAPC
BRCPTOC	BRCPTOC	BRCPTOC
BTIGAPC	B16IFCVI	BTIGAPC
BUSPTRC_B1	BBSPLLN0 BUSPTRC	LLN0 BUSPTRC
BUSPTRC_B2	BUSPTRC	BUSPTRC
BUSPTRC_B3	BUSPTRC	BUSPTRC
BUSPTRC_B4	BUSPTRC	BUSPTRC
BUSPTRC_B5	BUSPTRC	BUSPTRC
BUSPTRC_B6	BUSPTRC	BUSPTRC
BUSPTRC_B7	BUSPTRC	BUSPTRC
BUSPTRC_B8	BUSPTRC	BUSPTRC
BUSPTRC_B9	BUSPTRC	BUSPTRC
BUSPTRC_B10	BUSPTRC	BUSPTRC
BUSPTRC_B11	BUSPTRC	BUSPTRC
BUSPTRC_B12	BUSPTRC	BUSPTRC
Table continues on next page		

Function block name	Edition 1 logical nodes	Edition 2 logical nodes
BUSPTRC_B13	BUSPTRC	BUSPTRC
BUSPTRC_B14	BUSPTRC	BUSPTRC
BUSPTRC_B15	BUSPTRC	BUSPTRC
BUSPTRC_B16	BUSPTRC	BUSPTRC
BUSPTRC_B17	BUSPTRC	BUSPTRC
BUSPTRC_B18	BUSPTRC	BUSPTRC
BUSPTRC_B19	BUSPTRC	BUSPTRC
BUSPTRC_B20	BUSPTRC	BUSPTRC
BUSPTRC_B21	BUSPTRC	BUSPTRC
BUSPTRC_B22	BUSPTRC	BUSPTRC
BUSPTRC_B23	BUSPTRC	BUSPTRC
BUSPTRC_B24	BUSPTRC	BUSPTRC
BUTPTRC_B1	BBTPLLN0 BUTPTRC	LLN0 BUTPTRC
BUTPTRC_B2	BUTPTRC	BUTPTRC
BUTPTRC_B3	BUTPTRC	BUTPTRC
BUTPTRC_B4	BUTPTRC	BUTPTRC
BUTPTRC_B5	BUTPTRC	BUTPTRC
BUTPTRC_B6	BUTPTRC	BUTPTRC
BUTPTRC_B7	BUTPTRC	BUTPTRC
BUTPTRC_B8	BUTPTRC	BUTPTRC
BZNSPDIF_A	BZNSPDIF	BZNSGAPC BZNSPDIF
BZNSPDIF_B	BZNSPDIF	BZNSGAPC BZNSPDIF
BZNTPDIF_A	BZNTPDIF	BZNTGAPC BZNTPDIF
BZNTPDIF_B	BZNTPDIF	BZNTGAPC BZNTPDIF
CBPGAPC	CBPLLN0 CBPMMXU CBPPTRC HOLPTOV HPH1PTOV PH3PTOC PH3PTUC RP3PDOP	LLN0 CBPPTRC HOLPTOV HPH1PTOV PH3PTOC PH3PTUC RP3PDOP
CCPDSC	CCRPLD	CCPDSC
CCRBRF	CCRBRF	CCRBRF
CCSRBRF	CCSRBRF	CCSRBRF
CCSSPVC	CCSRDIF	CCSSPVC
Table continues on next page		

Function block name	Edition 1 logical nodes	Edition 2 logical nodes
CMMXU	CMMXU	CMMXU
CMSQI	CMSQI	CMSQI
COUVGAPC	COUVLLN0 COUVPTOV COUVPTUV	LLN0 COUVPTOV COUVPTUV
CVGAPC	GF2LLN0 GF2MMXN GF2PHAR GF2PTOV GF2PTUC GF2PTUV GF2PVOC PH1PTRC	LLN0 GF2MMXN GF2PHAR GF2PTOV GF2PTUC GF2PTUV GF2PVOC PH1PTRC
CVMMXN	CVMMXN	CVMMXN
DPGAPC	DPGGIO	DPGAPC
DRPRDRE	DRPRDRE	DRPRDRE
ECPSCH	ECPSCH	ECPSCH
ECRWPSCH	ECRWPSCH	ECRWPSCH
EF4PTOC	EF4LLN0 EF4PTRC EF4RDIR GEN4PHAR PH1PTOC	LLN0 EF4PTRC EF4RDIR GEN4PHAR PH1PTOC
EFPIOC	EFPIOC	EFPIOC
ETPMMTR	ETPMMTR	ETPMMTR
FDPSPDIS	FDPSPDIS	FDPSPDIS
FMPSPDIS	FMPSPDIS	FMPSPDIS
FRPSPDIS	FPSRPDIS	FPSRPDIS
FTAQFVR	FTAQFVR	FTAQFVR
FUFSPVC	SDDRFUF	FUFSPVC
GENPDIF	GENPDIF	LLN0 GENGAPC GENPDIF GENPHAR GENPTRC
GOPPDOP	GOPPDOP	LLN0 GOPPDOP PH1PTRC
GRPTTR	GRPTTR	LLN0 GRPTTR GRPTUC
GSPTTR	GSPTTR	GSPTTR
GUPPDUP	GUPPDUP	LLN0 GUPPDUP PH1PTRC
Table continues on next page		

Function block name	Edition 1 logical nodes	Edition 2 logical nodes
HZPDIF	HZPDIF	HZPDIF
INDCALCH		INDCALH
ITBGAPC	IB16FCVB	ITBGAPC
L3CPDIF	L3CPDIF	LLN0 L3CGAPC L3CPDIF L3CPHAR L3CPTRC
L4UFCNT	L4UFCNT	L4UFCNT
L6CPDIF	L6CPDIF	LLN0 L6CGAPC L6CPDIF L6CPHAR L6CPTRC
LAPPGAPC	LAPPLLN0 LAPPPDUP LAPPPUPF	LLN0 LAPPPDUP LAPPPUPF
LCCRPTRC	LCCRPTRC	LCCRPTRC
LCNSPTOC	LCNSPTOC	LCNSPTOC
LCNSPTOV	LCNSPTOV	LCNSPTOV
LCP3PTOC	LCP3PTOC	LCP3PTOC
LCP3PTUC	LCP3PTUC	LCP3PTUC
LCPTTR	LCPTTR	LCPTTR
LCZSPTOC	LCZSPTOC	LCZSPTOC
LCZSPTOV	LCZSPTOV	LCZSPTOV
LD0LLN0	LLN0	LLN0
LDLPSCH	LDLPDIF	LDLPSCH
LDRGFC	STSGGIO	LDRGFC
LEXPDIS	LEXPDIS	LLN0 LEXPDIS LEXPTRC
LFPTTR	LFPTTR	LFPTTR
LMBRFLO	LMBRFLO	LMBRFLO
LOVPTUV	LOVPTUV	LOVPTUV
LPHD	LPHD	LPHD
LT3CPDIF	LT3CPDIF	LLN0 LT3CGAPC LT3CPDIF LT3CPHAR LT3CPTRC
Table continues on next page		

Function block name	Edition 1 logical nodes	Edition 2 logical nodes
LT6CPDIF	LT6CPDIF	LLN0 LT6CGAPC LT6CPDIF LT6CPHAR LT6CPTRC
MVGAPC	MVGGIO	MVGAPC
NS2PTOC	NS2LLN0 NS2PTOC NS2PTRC	LLN0 NS2PTOC NS2PTRC
NS4PTOC	EF4LLN0 EF4PTRC EF4RDIR GEN4PHAR PH1PTOC	LLN0 EF4PTRC EF4RDIR PH1PTOC
OC4PTOC	OC4LLN0 GEN4PHAR PH3PTOC PH3PTRC	LLN0 GEN4PHAR PH3PTOC PH3PTRC
OEXPVPH	OEXPVPH	OEXPVPH
OOSPPAM	OOSPPAM	LLN0 OOSPPAM OOSPTRC
OV2PTOV	GEN2LLN0 OV2PTOV PH1PTRC	LLN0 OV2PTOV PH1PTRC
PAPGAPC	PAPGAPC	PAPGAPC
PCFCNT	PCGGIO	PCFCNT
PH4SPTOC	OCNDLLN0 GEN4PHAR PH1BPTOC PH1PTRC	LLN0 GEN4PHAR PH1BPTOC PH1PTRC
PHPIOC	PHPIOC	PHPIOC
PRPSTATUS	RCHLCCH	RCHLCCH SCHLCCH
PSLPSCH	ZMRPSL	PSLPSCH
PSPPPAM	PSPPPAM	LLN0 PSPPPAM PSPPTRC
QCBAY	QCBAY	LLN0
QCRSV	QCRSV	QCRSV
REFPDIF	REFPDIF	REFPDIF
ROTIPHIZ	ROTIPHIZ	LLN0 ROTIPHIZ ROTIPTRC
ROV2PTOV	GEN2LLN0 PH1PTRC ROV2PTOV	LLN0 PH1PTRC ROV2PTOV

Table continues on next page

Function block name	Edition 1 logical nodes	Edition 2 logical nodes
SAPFRC	SAPFRC	SAPFRC
SAPTOF	SAPTOF	SAPTOF
SAPTUF	SAPTUF	SAPTUF
SCCVPTOC	SCCVPTOC	SCCVPTOC
SCILO	SCILO	SCILO
SCSWI	SCSWI	SCSWI
SDEPSDE	SDEPSDE	LLN0 SDEPSDE SDEPTOC SDEPTOV SDEPTRC
SESRSYN	RSY1LLN0 AUT1RSYN MAN1RSYN SYNRSYN	LLN0 AUT1RSYN MAN1RSYN SYNRSYN
SINGLELCCH		SCHLCCH
SLGAPC	SLGGIO	SLGAPC
SMBRREC	SMBRREC	SMBRREC
SMPPTRC	SMPPTRC	SMPPTRC
SP16GAPC	SP16GGIO	SP16GAPC
SPC8GAPC	SPC8GGIO	SPC8GAPC
SPGAPC	SPGGIO	SPGAPC
SSCBR	SSCBR	SSCBR
SSIMG	SSIMG	SSIMG
SSIML	SSIML	SSIML
STBPTOC	STBPTOC	STBPTOC
STEFPHIZ	STEFPHIZ	STEFPHIZ
STTIPHIZ	STTIPHIZ	STTIPHIZ
SXCBR	SXCBR	SXCBR
SXSWI	SXSWI	SXSWI
T2WPDIF	T2WPDIF	LLN0 T2WGAPC T2WPDIF T2WPHAR T2WPTRC
T3WPDIF	T3WPDIF	LLN0 T3WGAPC T3WPDIF T3WPHAR T3WPTRC
TCLYLTC	TCLYLTC	TCLYLTC
TCMYLTC	TCMYLTC	TCMYLTC
Table continues on next page		

Function block name	Edition 1 logical nodes	Edition 2 logical nodes
TEIGAPC	TEIGGIO	TEIGAPC
TMAGAPC	TMAGGIO	TMAGAPC
TR1ATCC	TR1ATCC	TR1ATCC
TR8ATCC	TR8ATCC	TR8ATCC
TRPTTR	TRPTTR	TRPTTR
UV2PTUV	GEN2LLN0 PH1PTRC UV2PTUV	LLN0 PH1PTRC UV2PTUV
VDCPTOV	VDCPTOV	VDCPTOV
VDSPVC	VDRFUF	VDSPVC
VMMXU	VMMXU	VMMXU
VMSQI	VMSQI	VMSQI
VNMMXU	VNMMXU	VNMMXU
VRPVOC	VRLLN0 PH1PTRC PH1PTUV VRPVOC	LLN0 PH1PTRC PH1PTUV VRPVOC
VSGAPC	VSGGIO	VSGAPC
WRNCALH		WRNCALH
ZC1PPSCH	ZPCPSCH	ZPCPSCH
ZC1WPSCH	ZPCWPSCH	ZPCWPSCH
ZCLCPSCH	ZCLCPLAL	LLN0 ZCLCPSCH
ZCPSCH	ZCPSCH	ZCPSCH
ZCRWPSCH	ZCRWPSCH	ZCRWPSCH
ZCVPSOF	ZCVPSOF	ZCVPSOF
ZGVPDIS	ZGVLLN0 PH1PTRC ZGVPDIS ZGVPTUV	LLN0 PH1PTRC ZGVPDIS ZGVPTUV
ZMCAPDIS	ZMCAPDIS	ZMCAPDIS
ZMCPDIS	ZMCPDIS	ZMCPDIS
ZMFCPDIS	ZMFCLLN0 PSFPDIS ZMFPDIS	LLN0 PSFPDIS ZMFPDIS
ZMFPDIS	ZMFLLN0 PSFPDIS ZMFPDIS	LLN0 PSFPDIS ZMFPDIS
ZMHPDIS	ZMHPDIS	ZMHPDIS
ZMMAPDIS	ZMMAPDIS	ZMMAPDIS
ZMMPDIS	ZMMPDIS	ZMMPDIS
Table continues on next page		

Function block name	Edition 1 logical nodes	Edition 2 logical nodes
ZMQAPDIS	ZMQAPDIS	ZMQAPDIS
ZMQPDIS	ZMQPDIS	ZMQPDIS
ZMRAPDIS	ZMRAPDIS	ZMRAPDIS
ZMRPDIS	ZMRPDIS	ZMRPDIS
ZMRPSB	ZMRPSB	ZMRPSB
ZSMGAPC	ZSMGAPC	ZSMGAPC

Section 2 Application

2.1 General IED application

RED670 is used for the protection, control and monitoring of overhead lines and cables in all types of networks. The IED can be used from distribution up to the highest voltage levels. It is suitable for the protection of heavily loaded lines and multi-terminal lines where the requirement for tripping is one-, two-, and/or three-pole. The IED is also suitable for protection of cable feeders to generator block transformers.

The phase segregated current differential protection provides an excellent sensitivity for high resistive faults and gives a secure phase selection. The availability of six stabilized current inputs per phase allows use on multi-breaker arrangements in three terminal applications or up to five terminal applications with single breaker arrangements. The communication between the IEDs involved in the differential scheme is based on the IEEE C37.94 standard and can be duplicated for important installations when required for redundancy reasons. Charging current compensation allows high sensitivity also on long overhead lines and cables.

A full scheme distance protection is included to provide independent protection in parallel with the differential scheme in case of a communication channel failure for the differential scheme. The distance protection then provide protection for the entire line including the remote end back up capability either in case of a communications failure or via use of an independent communication channel to provide a fully redundant scheme of protection (that is a second main protection scheme). Eight channels for intertrip and other binary signals are available in the communication between the IEDs.

A high impedance differential protection can be used to protect T-feeders or line reactors.

The auto-reclose for single-, two- and/or three pole reclosing includes priority circuits for multi-breaker arrangements. It co-operates with the synchronism check function with high-speed or delayed reclosing.

High set instantaneous phase and ground overcurrent, four step directional or non-directional delayed phase and ground overcurrent, thermal overload and two step under- and overvoltage functions are examples of the available functions allowing the user to fulfill any application requirement.

The IED can also be provided with a full control and interlocking functionality including co-operation with the synchronism check function to allow integration of the main or back-up control.

Disturbance recording and fault locator are available to allow independent post-fault analysis after primary disturbances. The Disturbance recorder will also show remote station currents, as received to this IED, time compensated with measure communication time.

Out of Step function is available to separate power system sections close to electrical centre at occurring out of step.

RED670 can be used in applications with IEC 61850-9-2LE process bus with up to four merging units (MU) depending on other functionality included in the IED.

Each MU has eight analogue channels, normally four currents and four voltages. Conventional and Merging Unit channels can be mixed freely in the application.

If IEC 61850-9-2LE communication is interrupt, data from the merging units (MU) after the time for interruption will be incorrect. Both data stored in the IED and displayed on the local HMI will be corrupt. For this reason it is important to connect signal from respective MU units (SMPLLOST) to the disturbance recorder.

The logic is prepared with a graphical tool. The advanced logic capability allows special applications such as automatic opening of disconnectors in multi-breaker arrangements, closing of breaker rings, load transfer logics etc. The graphical configuration tool ensures simple and fast testing and commissioning.

A loop testing function allows complete testing including remote end IED when local IED is set in test mode.

Communication via optical connections ensures immunity against disturbances.

2.2 Main protection functions

2	= number of basic instances
0-3	= option quantities
3-A03	= optional function included in packages A03 (refer to ordering details)

IEC 61850	ANSI	Function description	Line Differential
			RED670
Differential protection			
HZPDIF	87	1Ph high impedance differential protection	0-3
REFPDIF	87N	Restricted earth fault protection, low impedance	0–2

Table continues on next page

IEC 61850	ANSI	Function description	Line Differential
			RED670
L3CPDIF	87L	Line differential protection, 3 CT sets, 2–3 line ends	1
L6CPDIF	87L	Line differential protection, 6 CT sets, 3–5 line ends	1
LT3CPDIF	87LT	Line differential protection, 3 CT sets, with inzone transformers, 2–3 line ends	1
LT6CPDIF	87LT	Line differential protection, 6 CT sets, with inzone transformers, 3–5 line ends	1
LDLPSCH	87L	Line differential protection logic	1
LDRGFC	11REL	Additional security logic for differential protection	0-1
Impedance protection			
ZMQPDIS, ZMQAPDIS	21	Distance protection zone, quadrilateral characteristic	0-5
ZDRDIR	21D	Directional impedance quadrilateral	0-2
ZMCAPDIS	21	Additional distance measuring zone, quadrilateral characteristic	
ZMCPDIS, ZMCAPDIS	21	Distance measuring zone, quadrilateral characteristic for series compensated lines	0-5
ZDSRDIR	21D	Directional impedance quadrilateral, including series compensation	0-2
FDPSPDIS	21	Phase selection, quadrilateral characteristic with fixed angle	0-2
ZMHPDIS	21	Fullscheme distance protection, mho characteristic	0-5
ZMMPDIS, ZMMAPDIS	21	Fullscheme distance protection, quadrilateral for ground faults	0-5
ZDMRDIR	21D	Directional impedance element for mho characteristic	0-2
ZDARDIR		Additional distance protection directional function for ground faults	0-2
ZSMGAPC		Mho impedance supervision logic	0-1
FMPSPDIS	21	Faulty phase identification with load enchroachment	0-2
ZMRPDIS, ZMRAPDIS	21	Distance protection zone, quadrilateral characteristic, separate settings	0-5
FRPSPDIS	21	Phase selection, quadrilateral characteristic with fixed angle	0-2
ZMFPDIS	21	High speed distance protection	0–1
ZMFCPDIS	21	High speed distance protection for series compensated lines	0–1
ZMRPSB	68	Power swing detection	0-1
PSLPSCH		Power swing logic	0-1
PSPPPAM	78	Pole slip/out-of-step protection	0-1
OOSPPAM	78	Out-of-step protection	0–1
ZCVPSOF		Automatic switch onto fault logic, voltage and current based	0-1
PPLPHIZ		Phase preference logic	0-1

2.3 Back-up protection functions

IEC 61850	ANSI	Function description	Line Differential RED670
Current protection			
PHPIOC	50	Instantaneous phase overcurrent protection	0-3
OC4PTOC	51_67[1)]	Four step phase overcurrent protection	0-3
EFPIOC	50N	Instantaneous residual overcurrent protection	0-1
EF4PTOC	51N 67N[2)]	Four step residual overcurrent protection	0-3
NS4PTOC	46I2	Four step directional negative phase sequence overcurrent protection	0-2
SDEPSDE	67N	Sensitive directional residual overcurrent and power protection	0-1
LCPTTR	26	Thermal overload protection, one time constant, Celsius	0–2
LFPTTR	26	Thermal overload protection, one time constant, Fahrenheit	0–2
CCRBRF	50BF	Breaker failure protection	0-2
STBPTOC	50STB	Stub protection	0-2
CCPDSC	52PD	Pole discordance protection	0-2
GUPPDUP	37	Directional underpower protection	0-2
GOPPDOP	32	Directional overpower protection	0-2
BRCPTOC	46	Broken conductor check	1
VRPVOC	51V	Voltage restrained overcurrent protection	0-3
Voltage protection			
UV2PTUV	27	Two step undervoltage protection	0-2
OV2PTOV	59	Two step overvoltage protection	0-2
ROV2PTOV	59N	Two step residual overvoltage protection	0-2
OEXPVPH	24	Overexcitation protection	0-1
VDCPTOV	60	Voltage differential protection	0-2
LOVPTUV	27	Loss of voltage check	1
PAPGAPC	27	Radial feeder protection	0–1
Frequency protection			
SAPTUF	81	Underfrequency protection	0-2
SAPTOF	81	Overfrequency protection	0-2
SAPFRC	81	Rate-of-change frequency protection	0-2
Multipurpose protection			

Table continues on next page

IEC 61850	ANSI	Function description	Line Differential RED670
CVGAPC		General current and voltage protection	0-4
General calculation			
SMAIHPAC		Multipurpose filter	0-6

1) 67 requires voltage
2) 67N requires voltage

2.4 Control and monitoring functions

IEC 61850	ANSI	Function description	Line Differential RED670
Control			
SESRSYN	25	Synchrocheck, energizing check and synchronizing	0-2
SMBRREC	79	Autorecloser	0-4
APC8	3	Apparatus control for single bay, max 8 apparatuses (1CB) incl. interlocking	0-1
APC15	3	Apparatus control for single bay, max 15 apparatuses (2CBs) incl. interlocking	0-1
QCBAY		Apparatus control	1
LOCREM		Handling of LRswitch positions	1
LOCREMCTRL		LHMI control of PSTO	1
SLGAPC		Logic rotating switch for function selection and LHMI presentation	15
VSGAPC		Selector mini switch	20
DPGAPC		Generic communication function for Double Point indication	16
SPC8GAPC		Single point generic control 8 signals	5
AUTOBITS		AutomationBits, command function for DNP3.0	3
SINGLECMD		Single command, 16 signals	4
I103CMD		Function commands for IEC 60870-5-103	1
I103GENCMD		Function commands generic for IEC 60870-5-103	50
I103POSCMD		IED commands with position and select for IEC 60870-5-103	50
I103IEDCMD		IED commands for IEC 60870-5-103	1
I103USRCMD		Function commands user defined for IEC 60870-5-103	1
Secondary system supervision			
CCSSPVC	87	Current circuit supervision	0-2
FUFSPVC		Fuse failure supervision	0-3
VDSPVC	60	Fuse failure supervision based on voltage difference	0-3

Table continues on next page

IEC 61850	ANSI	Function description	Line Differential
			RED670
Logic			
SMPPTRC	94	Tripping logic	1-6
TMAGAPC		Trip matrix logic	12
ALMCALH		Logic for group alarm	5
WRNCALH		Logic for group warning	5
INDCALH		Logic for group indication	5
AND, OR, INV, PULSETIMER, GATE, TIMERSET, XOR, LLD, SRMEMORY, RSMEMORY		Configurable logic blocks	40-280
ANDQT, ORQT, INVERTERQT, XORQT, SRMEMORYQT, RSMEMORYQT, TIMERSETQT, PULSETIMERQT, INVALIDQT, INDCOMBSPQT, INDEXTSPQT		Configurable logic blocks Q/T	0–1
SLGAPC, VSGAPC, AND, OR, PULSETIMER, GATE, TIMERSET, XOR, LLD, SRMEMORY, INV		Extension logic package	0–1
FXDSIGN		Fixed signal function block	1
B16I		Boolean 16 to Integer conversion	18
BTIGAPC		Boolean 16 to Integer conversion with Logic Node representation	16
IB16		Integer to Boolean 16 conversion	18
ITBGAPC		Integer to Boolean 16 conversion with Logic Node representation	16
TEIGAPC		Elapsed time integrator with limit transgression and overflow supervision	12
Monitoring			

Table continues on next page

IEC 61850	ANSI	Function description	Line Differential
			RED670
CVMMXN, CMMXU, VMMXU, CMSQI, VMSQI, VNMMXU		Measurements	6
AISVBAS		Function block for service value presentation of secondary analog inputs	1
EVENT		Event function	20
DRPRDRE, A1RADR, A2RADR, A3RADR, A4RADR, B1RBDR, B2RBDR, B3RBDR, B4RBDR, B5RBDR, B6RBDR		Disturbance report	1
SPGAPC		Generic communication function for Single Point indication	64
SP16GAPC		Generic communication function for Single Point indication 16 inputs	16
MVGAPC		Generic communication function for Measured Value	24
BINSTATREP		Logical signal status report	3
RANGE_XP		Measured value expander block	66
SSIMG	63	Gas medium supervision	21
SSIML	71	Liquid medium supervision	3
SSCBR		Circuit breaker monitoring	0-2
LMBRFLO		Fault locator	1
I103MEAS		Measurands for IEC 60870-5-103	1
I103MEASUSR		Measurands user defined signals for IEC 60870-5-103	3
I103AR		Function status auto-recloser for IEC 60870-5-103	1
I103EF		Function status earth-fault for IEC 60870-5-103	1
I103FLTPROT		Function status fault protection for IEC 60870-5-103	1
I103IED		IED status for IEC 60870-5-103	1
I103SUPERV		Supervison status for IEC 60870-5-103	1
I103USRDEF		Status for user defiend signals for IEC 60870-5-103	20
L4UFCNT		Event counter with limit supervision	30
Metering			
PCFCNT		Pulse-counter logic	16
ETPMMTR		Function for energy calculation and demand handling	6

2.5 Communication

IEC 61850	ANSI	Function description	Line Differential RED670
Station communication			
LONSPA, SPA		SPA communication protocol	1
ADE		LON communication protocol	1
HORZCOMM		Network variables via LON	1
PROTOCOL		Operation selection between SPA and IEC 60870-5-103 for SLM	1
RS485PROT		Operation selection for RS485	1
RS485GEN		RS485	1
DNPGEN		DNP3.0 communication general protocol	1
DNPGENTCP		DNP3.0 communication general TCP protocol	1
CHSERRS485		DNP3.0 for EIA-485 communication protocol	1
CH1TCP, CH2TCP, CH3TCP, CH4TCP		DNP3.0 for TCP/IP communication protocol	1
CHSEROPT		DNP3.0 for TCP/IP and EIA-485 communication protocol	1
MST1TCP, MST2TCP, MST3TCP, MST4TCP		DNP3.0 for serial communication protocol	1
DNPFREC		DNP3.0 fault records for TCP/IP and EIA-485 communication protocol	1
IEC61850-8-1		Parameter setting function for IEC 61850	1
GOOSEINTLKRCV		Horizontal communication via GOOSE for interlocking	59
GOOSEBINRCV		Goose binary receive	16
GOOSEDPRCV		GOOSE function block to receive a double point value	64
GOOSEINTRCV		GOOSE function block to receive an integer value	32
GOOSEMVRCV		GOOSE function block to receive a measurand value	60
GOOSESPRCV		GOOSE function block to receive a single point value	64
MULTICMDRCV, MULTICMDSND		Multiple command and transmit	60/10

Table continues on next page

IEC 61850	ANSI	Function description	Line Differential
			RED670
FRONT, LANABI, LANAB, LANCDI, LANCD		Ethernet configuration of links	1
GATEWAY		Ethernet configuration of link one	1
OPTICAL103		IEC 60870-5-103 Optical serial communication	1
RS485103		IEC 60870-5-103 serial communication for RS485	1
AGSAL		Generic security application component	1
LD0LLN0		IEC 61850 LD0 LLN0	1
SYSLLN0		IEC 61850 SYS LLN0	1
LPHD		Physical device information	1
PCMACCS		IED Configuration Protocol	1
SECALARM		Component for mapping security events on protocols such as DNP3 and IEC103	1
FSTACCS		Field service tool access via SPA protocol over ethernet communication	1
ACTIVLOG		Activity logging parameters	1
ALTRK		Service Tracking	1
SINGLELCCH		Single ethernet port link status	1
PRPSTATUS		Dual ethernet port link status	1
		Process bus communication IEC 61850-9-2 1)	
PRP		IEC 62439-3 parallel redundancy protocol	0-1
Remote communication			
		Binary signal transfer receive/transmit	6/36
		Transmission of analog data from LDCM	1
		Receive binary status from remote LDCM	6/3/3
Scheme communication			
ZCPSCH	85	Scheme communication logic for distance or overcurrent protection	0-1
ZC1PPSCH	85	Phase segregated scheme communication logic for distance protection	0-1
ZCRWPSCH	85	Current reversal and weak-end infeed logic for distance protection	0-1
ZC1WPSCH	85	Current reversal and weak-end infeed logic for phase segregated communication	0-1
ZCLCPSCH		Local acceleration logic	0-1

Table continues on next page

IEC 61850	ANSI	Function description	Line Differential
			RED670
ECPSCH	85	Scheme communication logic for residual overcurrent protection	0-1
ECRWPSCH	85	Current reversal and weak-end infeed logic for residual overcurrent protection	0-1
DTT		Direct transfer trip	0-1

1) Only included for 9-2LE products

2.6 Basic IED functions

Table 2: Basic IED functions

IEC 61850 or function name	Description
INTERRSIG	Self supervision with internal event list
SELFSUPEVLST	Self supervision with internal event list
TIMESYNCHGEN	Time synchronization module
SYNCHBIN, SYNCHCAN, SYNCHCMPPS, SYNCHLON, SYNCHPPH, SYNCHPPS, SYNCHSNTP, SYNCHSPA, SYNCHCMPPS	Time synchronization
TIMEZONE	Time synchronization
DSTBEGIN, DSTENABLE, DSTEND	GPS time synchronization module
IRIG-B	Time synchronization
SETGRPS	Number of setting groups
ACTVGRP	Parameter setting groups
TESTMODE	Test mode functionality
CHNGLCK	Change lock function
SMBI	Signal matrix for binary inputs
SMBO	Signal matrix for binary outputs
SMMI	Signal matrix for mA inputs
SMAI1 - SMAI20	Signal matrix for analog inputs
3PHSUM	Summation block 3 phase
ATHSTAT	Authority status
ATHCHCK	Authority check

Table continues on next page

IEC 61850 or function name	Description
AUTHMAN	Authority management
FTPACCS	FTP access with password
SPACOMMMAP	SPA communication mapping
SPATD	Date and time via SPA protocol
DOSFRNT	Denial of service, frame rate control for front port
DOSLANAB	Denial of service, frame rate control for OEM port AB
DOSLANCD	Denial of service, frame rate control for OEM port CD
DOSSCKT	Denial of service, socket flow control
GBASVAL	Global base values for settings
PRIMVAL	Primary system values
ALTMS	Time master supervision
ALTIM	Time management
ALTRK	Service tracking
ACTIVLOG	Activity logging parameters
FSTACCS	Field service tool access via SPA protocol over ethernet communication
PCMACCS	IED Configuration Protocol
SECALARM	Component for mapping security events on protocols such as DNP3 and IEC103
DNPGEN	DNP3.0 communication general protocol
DNPGENTCP	DNP3.0 communication general TCP protocol
CHSEROPT	DNP3.0 for TCP/IP and EIA-485 communication protocol
MSTSER	DNP3.0 for serial communication protocol
OPTICAL103	IEC 60870-5-103 Optical serial communication
RS485103	IEC 60870-5-103 serial communication for RS485
IEC61850-8-1	Parameter setting function for IEC 61850
HORZCOMM	Network variables via LON
LONSPA	SPA communication protocol
LEDGEN	General LED indication part for LHMI

Section 3 Configuration

3.1 Introduction

There are four different software alternatives with which the IED can be ordered. The intention is that these configurations shall suit most applications with minor or no changes. The few changes required on binary input and outputs can be done from the signal matrix tool in the PCM600 engineering platform.

The main protection functions are switched *Disabled* at delivery. Back-up functions that are not generally used are also set to*Disabled*.

The configurations are:

- Single-breaker arrangement. Three-pole tripping arrangement.
- Single breaker arrangement. Single-pole tripping arrangement.
- Multi breaker arrangement. Three-pole tripping arrangement.
- Multi breaker arrangement. Single-pole tripping arrangement.

The Multi-breaker arrangement includes breaker-and-a-half and ring-breaker arrangements.

The number of IO must be ordered to the application where more IO is foreseen for the single-pole tripping arrangements respectively the multi-breaker arrangement.

The basic delivery includes one binary input module and one binary output module, which is sufficient for the default configured IO to trip and close circuit breaker.

All IEDs can be reconfigured with the help of the ACT configuration tool in the PCM600 engineering platform. The IED can be adapted to special applications and special logic can be developed, such as logic for automatic opening of disconnectors and closing of ring bays, automatic load transfer from one busbar to the other, and so on.

On request, ABB is available to support the re-configuration work, either directly or to do the design checking.

Optional functions and optional IO ordered will not be configured at delivery. It should be noted that the standard only includes one binary input and one binary output module and only the key functions such as tripping are connected to the outputs. The required total IO must be calculated and specified at ordering.

Hardware modules are configured with the hardware configuration tool in the PCM600 engineering platform.

The application configuration tool, which is part of the PCM600 engineering platform, will further to the four arrangements above include also alternatives for each of them with all of the software options configured. These can then be used directly or as assistance of how to configure the options. As the number of options can vary all alternatives possible cannot be handled.

The configurations are as far as found necessary provided with application comments to explain why the signals have been connected in the special way. This is of course for the special application features created, not “standard” functionality.

Application configuration diagrams and connection diagrams for the maximum application can be found in separate document, refer to section ""

3.2 Description of configuration RED670

3.2.1 Introduction

3.2.1.1 Description of configuration A31

The configuration of the IED is shown in Figure 2.

This configuration is used in applications with single breakers with single or double busbars. The protection scheme includes a 3–phase tripping and 3–phase autoreclosing scheme with a synchronism check.

The differential protection for up to 3 CT sets, 2–3 line ends is the main protection function. It is available with communication modules for single or redundant channels and can be used in two- or multi-terminal arrangements. Optional distance protection can be provided.

Measuring functions for S, P, Q, I, V, PF, f are available for local presentation on the local HMI and/or remote presentation. The availability of additional analog inputs allows connection of separate metering cores and a calibration parameter on the measurement function allows calibration at site to very high accuracy.

Optional functions can be ordered and include functions such as full control, local and remote, directional ground fault, out-of-step protection, frequency protection, and so on. These optional functions must be added to the configuration and loaded into the IED after delivery.

The following should be noted. The configuration is made with the binary input and binary output boards in the basic IED delivery. In many cases this is sufficient, in other cases, for example with full control of all apparatuses included more IO cards are required. Our proposal for a full version with control is to use two binary input modules and one binary output module. For systems without substation automation, a second binary output board might be required.

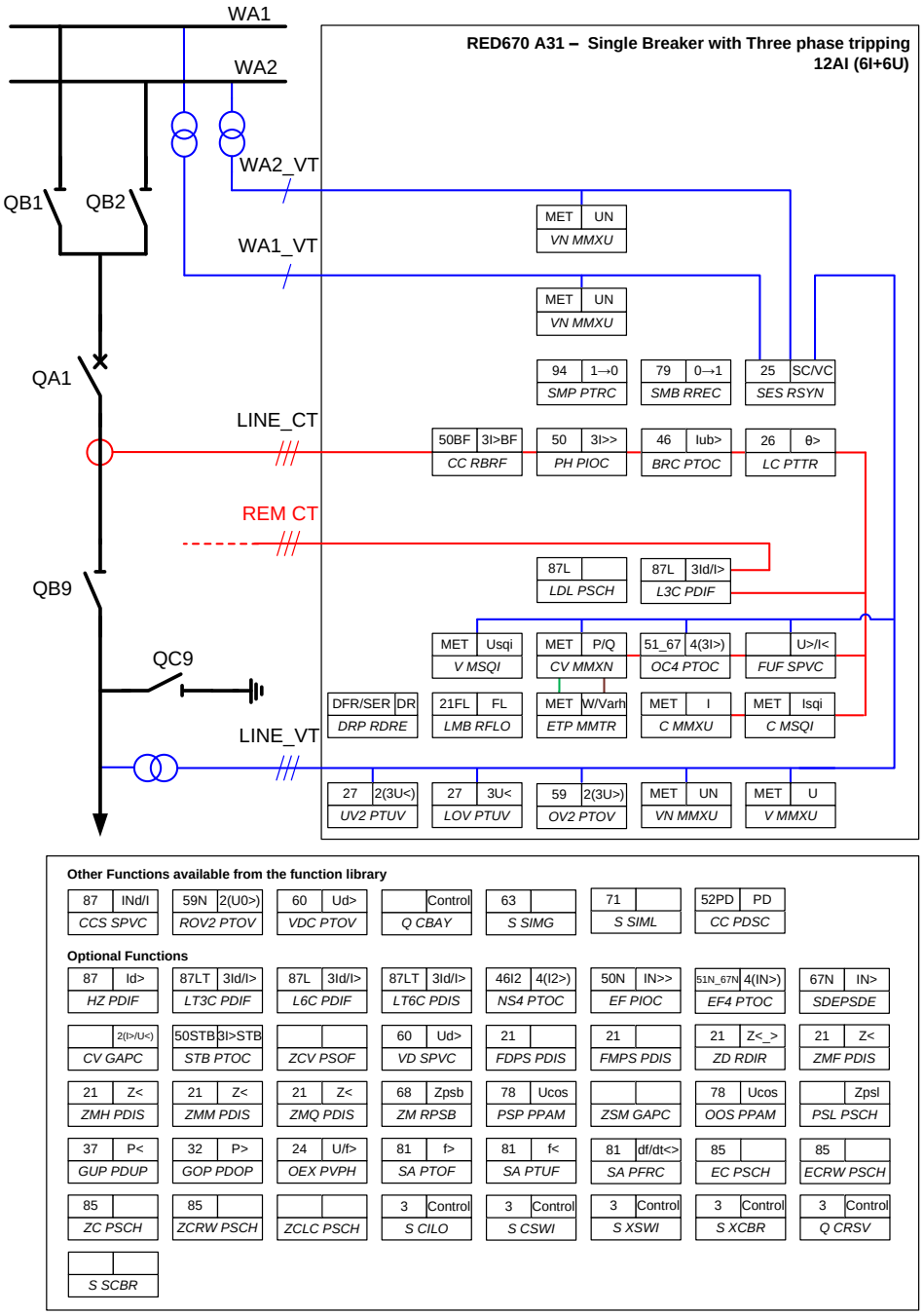

Figure 2: Configuration diagram for configuration A31

3.2.1.2 Description of configuration A32

The configuration of the IED is shown in Figure 3.

This configuration is used in applications with single breakers with single or double busbars. The protection scheme includes a 1–phase tripping and 1– or 3–phase autoreclosing scheme with a synchronism check.

The differential protection for up to 3 CT sets, 2–3 line ends is the main protection function. It is available with communication modules for single or redundant channels and can be used in two- or multi-terminal arrangements.

Measuring functions for S, P, Q, I, V, PF, f are available for local presentation on the local HMI and/or remote presentation. The availability of additional analog inputs allows connection of separate metering cores and a calibration parameter on the measurement function allows calibration at site to very high accuracy.

Optional functions can be ordered and include functions such as full control, local and remote, directional earth fault, out-of-step protection, frequency protection, and so on. These optional functions must be added to the configuration and loaded into the IED after delivery.

The following should be noted. The configuration is made with the binary input and binary output boards in the basic IED delivery. In many cases this is sufficient, in other cases e.g. with full control of all apparatuses included more IO cards are required. Our proposal for a full version with control is to use three binary input modules and two binary output module. For systems without substation automation, a second binary output board might be required.

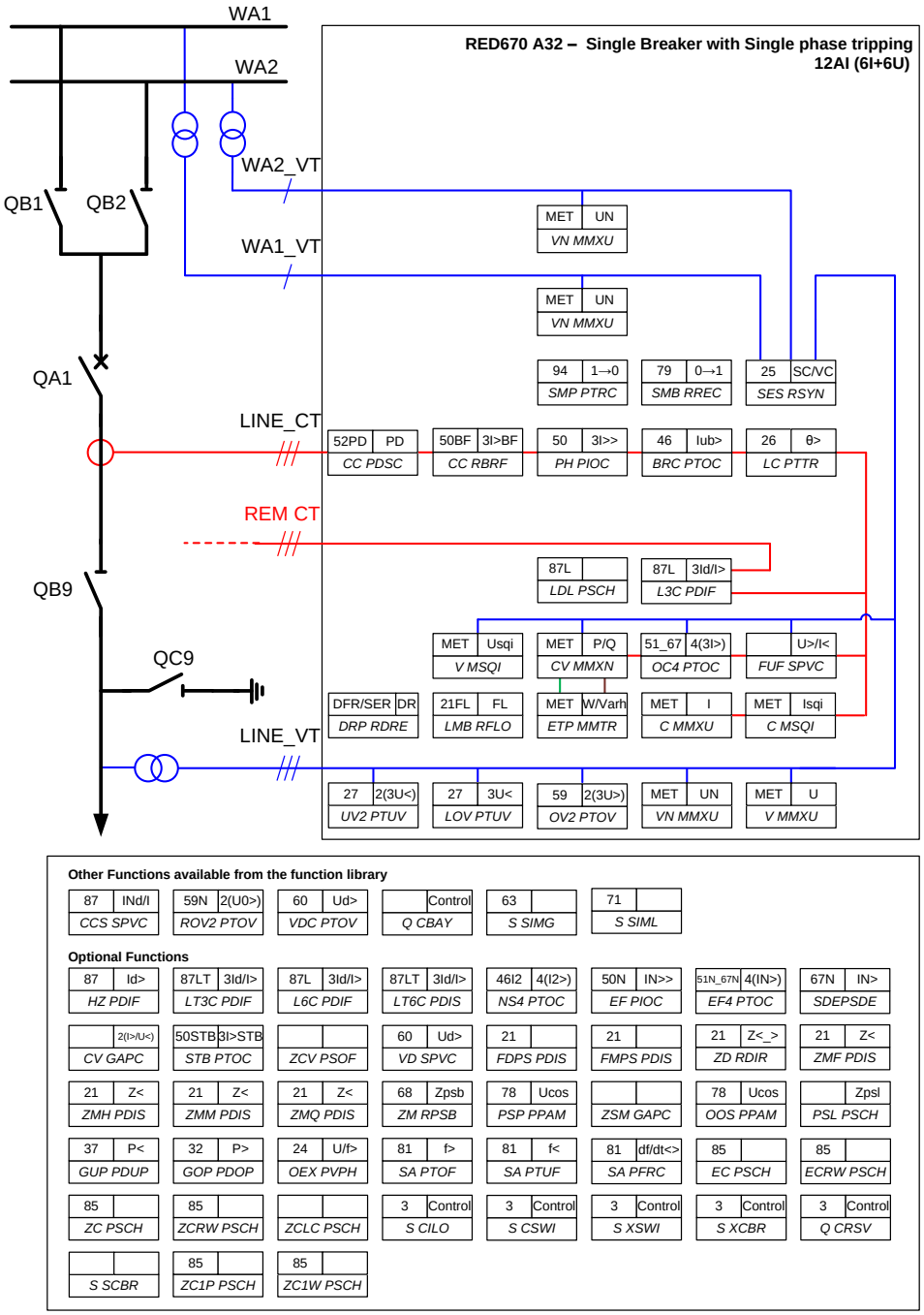

Figure 3: Configuration diagram for configuration A32

3.2.1.3 Description of configuration B31

The configuration of the IED is shown in Figure 4.

This configuration is used in applications with multi-breakers such as breaker-and-a-half breaker or ring busbar arrangements. The protection scheme includes a 3–phase tripping and 3–phase autoreclosing scheme with a synchronism check. Due to the multi-breaker involved there are two auto-reclosers and two synchronism check devices with a priority circuit to allow one to close first.

The differential protection for up to 6 CT sets, 3–5 line ends is the main protection function. It is available with communication modules for single or redundant channels and can be used in two or multi-terminal arrangements.

Measuring functions for S, P, Q, I, V, PF, f are available for local presentation on the local HMI and/or remote presentation. The availability of additional analog inputs allows connection of separate metering cores and a calibration parameter on the measurement function allows calibration at site to very high accuracy.

Optional functions can be ordered and include functions such as full control, local and remote, directional ground fault, out-of-step protection, frequency protection, and so on. These optional functions must be added to the configuration and loaded into the IED after delivery.

The following should be noted. The configuration is made with the binary input and binary output boards in the basic IED delivery. In many cases this is sufficient, in other cases, for example with full control of all apparatuses included more IO cards are required. Our proposal for a full version with control is to use two binary input modules and one binary output module. For systems without substation automation, a second binary output board might be required.

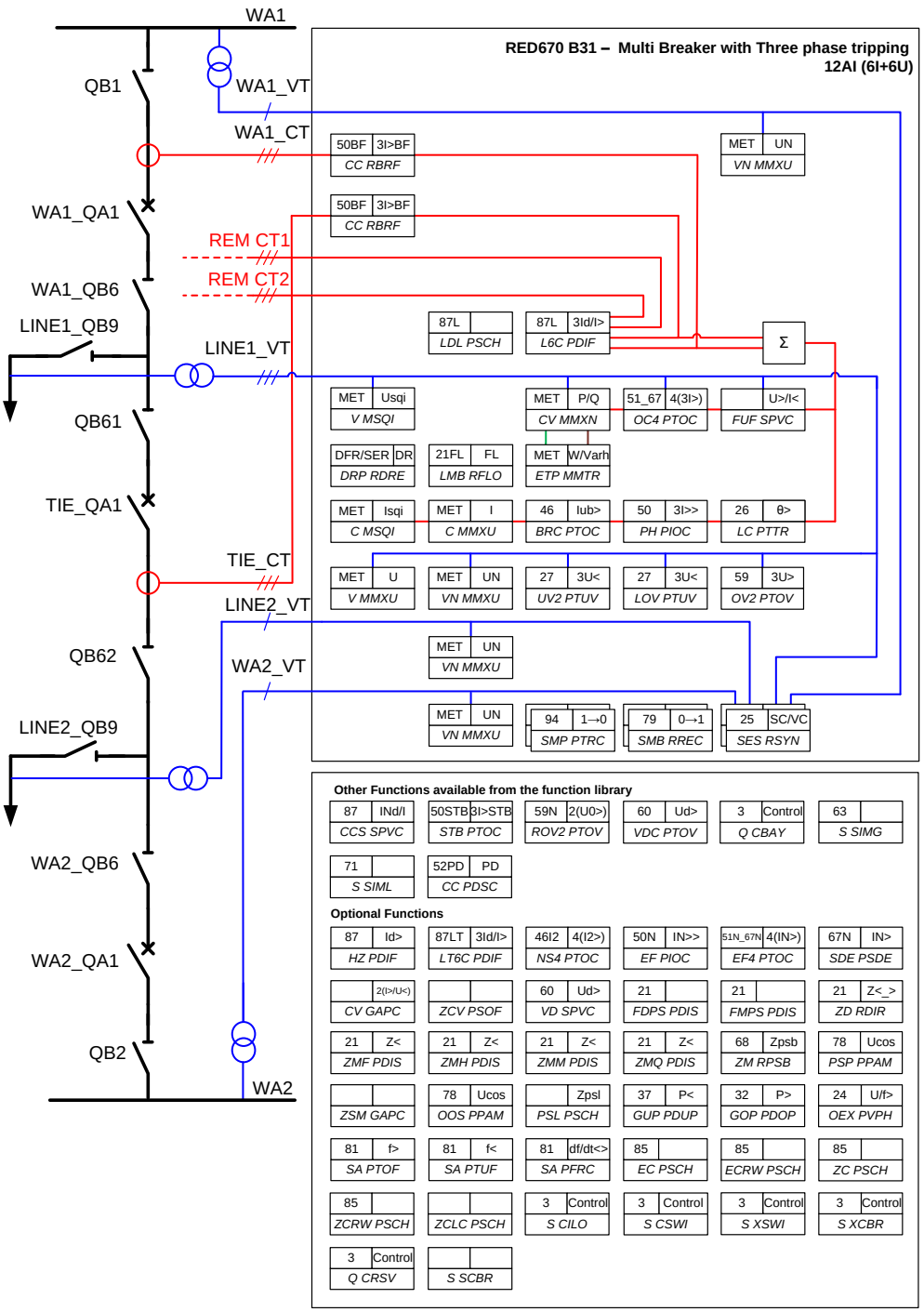

Figure 4: Configuration diagram for configuration B31

3.2.1.4 Description of configuration B32

This configuration is used in applications with multi-breakers such as breaker-and-a-half or ring-busbar arrangements. The protection scheme includes a 1– or 3–phase tripping and 1– or 3–phase autoreclosing scheme with a synchronism check. Due to the multi-breaker involved, there are two autoreclosers and two synchronism check devices with a priority circuit to allow one to close first.

The differential protection for up to 6 CT sets, 3–5 line ends is the main protection function. It is available with communication modules for single or redundant channels and can be used in two- or multi-terminal arrangements.

Measuring functions for S, P, Q, I, V, PF, f are available for local presentation on the local HMI and/or remote presentation. The availability of additional analog inputs allows connection of separate metering cores and a calibration parameter on the measurement function allows calibration at site to very high accuracy.

Optional functions can be ordered and include functions such as full control, local and remote, directional ground fault, out-of-step protection, frequency protection, and so on. These optional functions must be added to the configuration and loaded into the IED after delivery.

The following should be noted. The configuration is made with the binary input and binary output boards in the basic IED delivery. In many cases this is sufficient, in other cases, for example with full control of all apparatuses included more IO cards are required. Our proposal for a full version with control is to use two binary input modules and two binary output modules. For systems without substation automation, a second binary output board might be required.

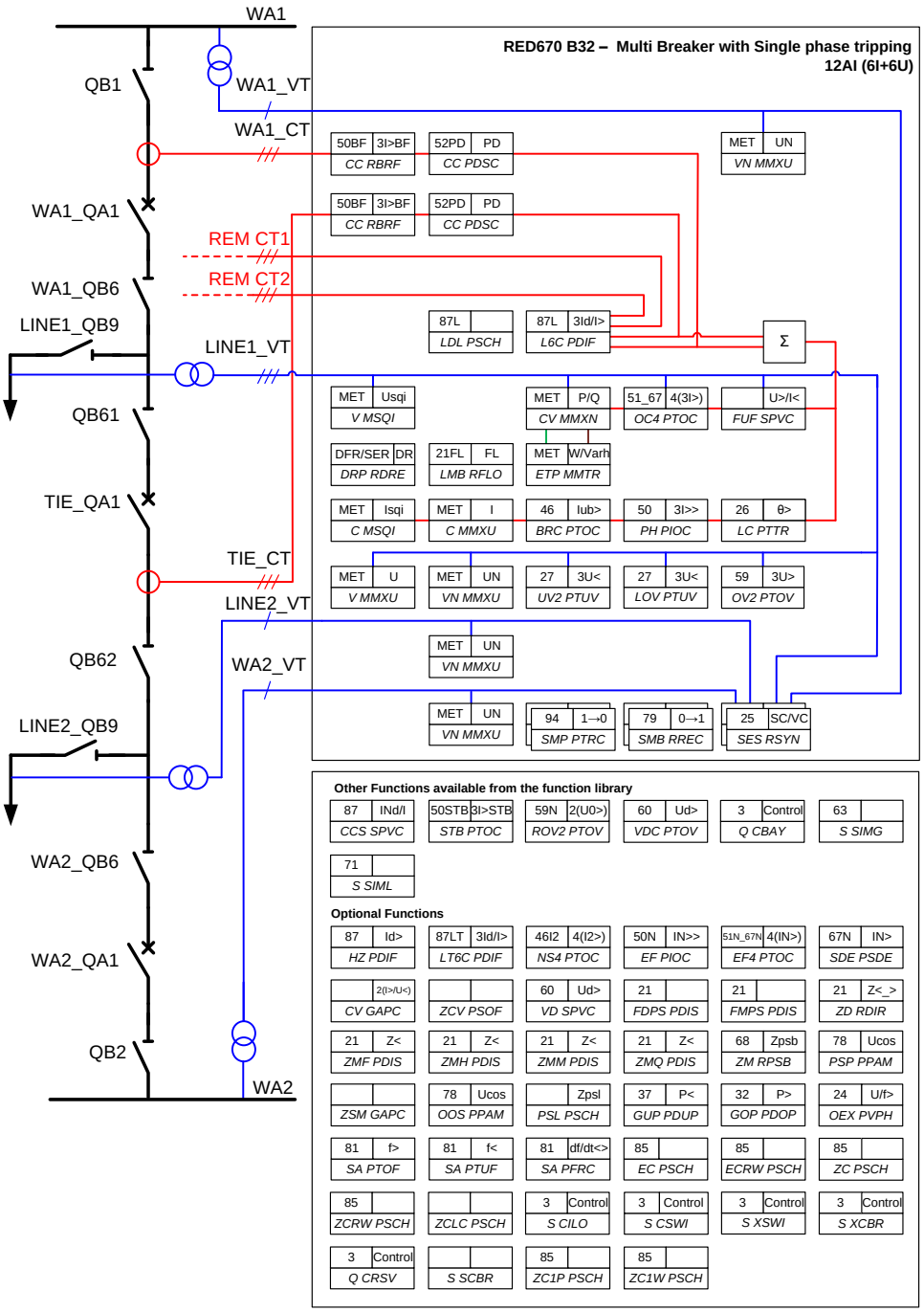

Figure 5: Configuration diagram for configuration B32

Section 4 Analog inputs

4.1 Analog inputs

4.1.1 Introduction

Analog input channels must be configured and set properly in order to get correct measurement results and correct protection operations. For power measuring and all directional and differential functions the directions of the input currents must be defined in order to reflect the way the current transformers are installed/connected in the field (primary and secondary connections). Measuring and protection algorithms in the IED use primary system quantities. Setting values are in primary quantities as well and it is important to set the data about the connected current and voltage transformers properly.

A reference *PhaseAngleRef* can be defined to facilitate service values reading. This analog channels phase angle will always be fixed to zero degrees and all other angle information will be shown in relation to this analog input. During testing and commissioning of the IED the reference channel can be changed to facilitate testing and service values reading.

The availability of VT inputs depends on the ordered transformer input module (TRM) type.

4.1.2 Setting guidelines

The available setting parameters related to analog inputs are depending on the actual hardware (TRM) and the logic configuration made in PCM600.

4.1.2.1 Setting of the phase reference channel

All phase angles are calculated in relation to a defined reference. An appropriate analog input channel is selected and used as phase reference. The parameter *PhaseAngleRef* defines the analog channel that is used as phase angle reference.

Example

The setting *PhaseAngleRef=7* shall be used if a phase-to-ground voltage (usually the A phase-to-ground voltage connected to VT channel number 7 of the analog card) is selected to be the phase reference.

Setting of current channels

The direction of a current to the IED is depending on the connection of the CT. Unless indicated otherwise, the main CTs are supposed to be Wye (star) connected and can be connected with the grounding point to the object or from the object. This information must be set in the IED. The convention of the directionality is defined as follows: A positive value of current, power, and so on means that the quantity has the direction into the object and a negative value means direction out from the object. For directional functions the direction into the object is defined as Forward and the direction out from the object is defined as Reverse. See figure 7

A positive value of current, power, and so on (forward) means that the quantity has a direction towards the object. - A negative value of current, power, and so on (reverse) means a direction away from the object. See figure 7.

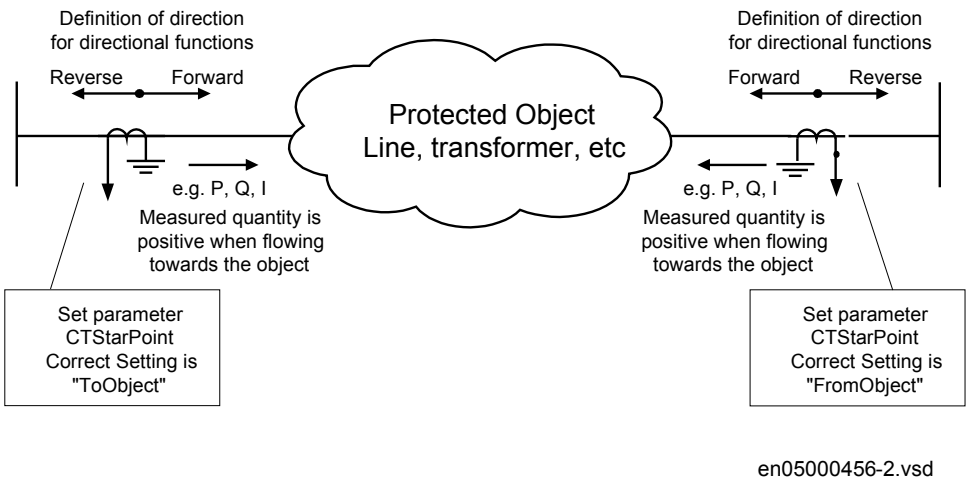

Figure 7: Internal convention of the directionality in the IED

With correct setting of the primary CT direction, *CT_WyePoint* set to *FromObject* or *ToObject*, a positive quantities always flowing towards the object and a direction defined as Forward always is looking towards the object. The following examples show the principle.

Example 1

Two IEDs used for protection of two objects.

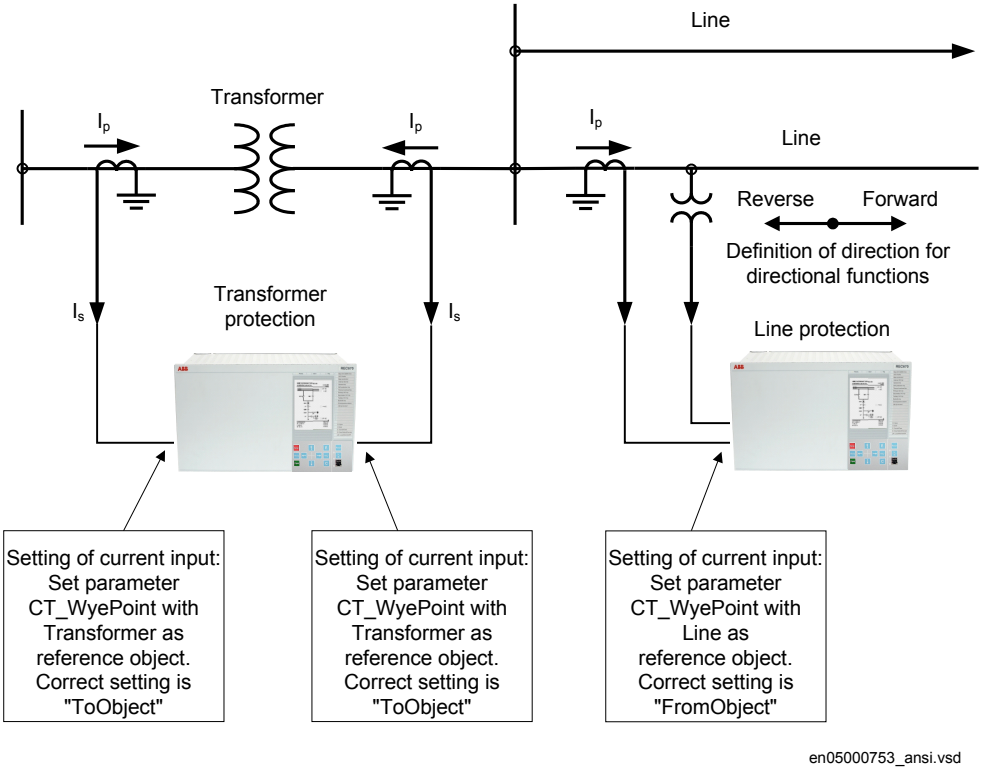

Figure 8: Example how to set CT_WyePoint parameters in the IED

The figure 8 shows the normal case where the objects have their own CTs. The settings for CT direction shall be done according to the figure. To protect the line the direction of the directional functions of the line protection shall be set to *Forward*. This means that the protection is looking towards the line.

Example 2

Two IEDs used for protection of two objects and sharing a CT.

Figure 9: Example how to set CT_WyePoint parameters in the IED

This example is similar to example 1, but here the transformer is feeding just one line and the line protection uses the same CT as the transformer protection does. The CT direction is set with different reference objects for the two IEDs though it is the same current from the same CT that is feeding the two IEDs. With these settings the directional functions of the line protection shall be set to *Forward* to look towards the line.

Example 3

One IED used to protect two objects.

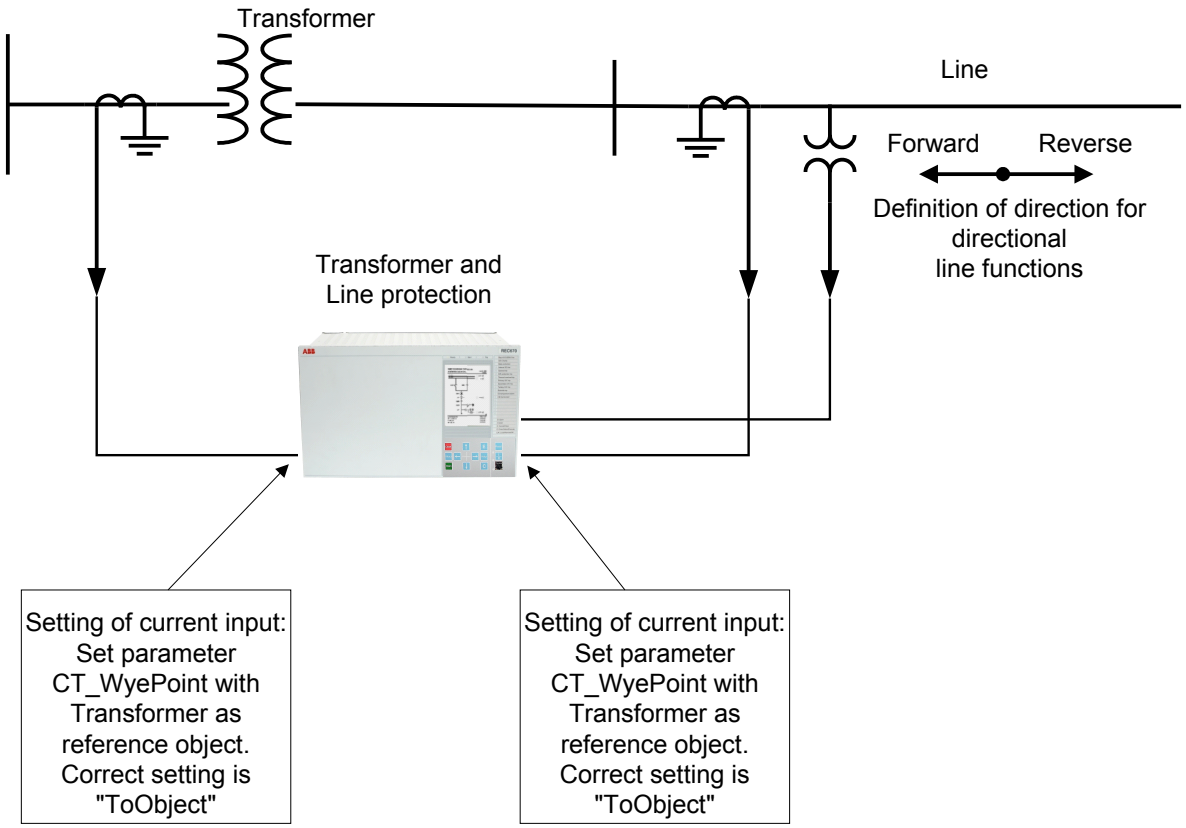

en05000461_ansi.vsd

Figure 10: Example how to set CT_WyePoint parameters in the IED

In this example one IED includes both transformer and line protection and the line protection uses the same CT as the transformer protection does. For both current input channels the CT direction is set with the transformer as reference object. This means that the direction Forward for the line protection is towards the transformer. To look towards the line the direction of the directional functions of the line protection must be set to *Reverse*. The direction *Forward*/*Reverse* is related to the reference object that is the transformer in this case.

When a function is set to *Reverse* and shall protect an object in reverse direction it shall be noted that some directional functions are not symmetrical regarding the reach in forward and reverse direction. It is in first hand the reach of the directional criteria that can differ. Normally it is not any limitation but it is advisable to have it in mind and check if it is acceptable for the application in question.

If the IED has a sufficient number of analog current inputs an alternative solution is shown in figure 11. The same currents are fed to two separate groups of inputs and the

line and transformer protection functions are configured to the different inputs. The CT direction for the current channels to the line protection is set with the line as reference object and the directional functions of the line protection shall be set to *Forward* to protect the line.

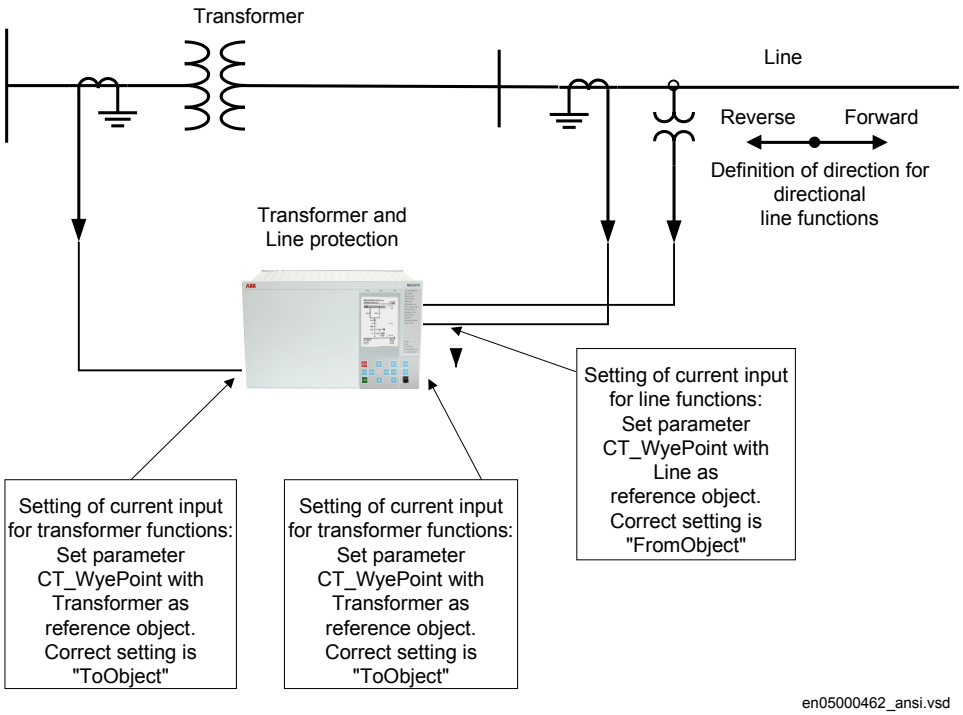

Figure 11: Example how to set CT_WyePoint parameters in the IED

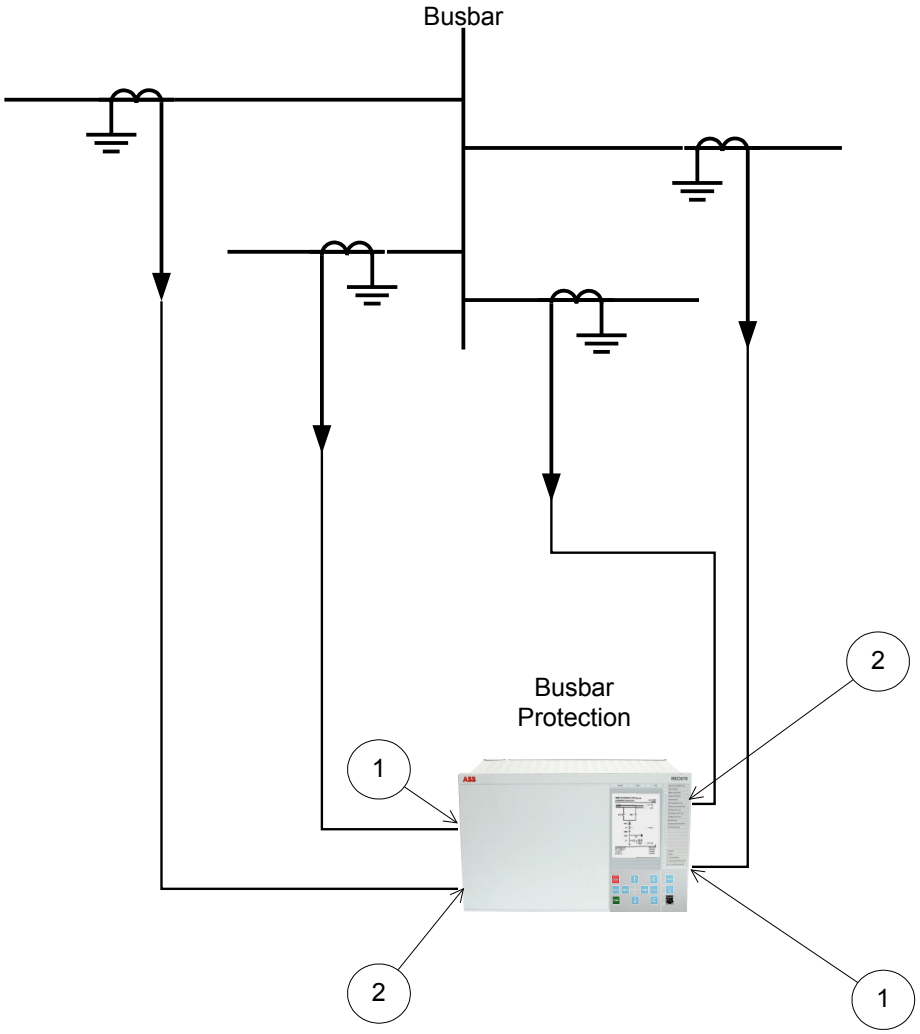

en06000196_ansi.vsd

Figure 12: Example how to set CT_WyePoint parameters in the IED

For busbar protection it is possible to set the *CT_WyePoint* parameters in two ways.

The first solution will be to use busbar as a reference object. In that case for all CT inputs marked with 1 in figure 12, set *CT_WyePoint = ToObject*, and for all CT inputs marked with 2 in figure 12, set *CT_WyePoint = FromObject*.

The second solution will be to use all connected bays as reference objects. In that case for all CT inputs marked with 1 in figure 12, set *CT_WyePoint = FromObject*, and for all CT inputs marked with 2 in figure 12, set *CT_WyePoint = ToObject*.

Regardless which one of the above two options is selected busbar differential protection will behave correctly.

The main CT ratios must also be set. This is done by setting the two parameters *CTsec* and *CTprim* for each current channel. For a 1000/5 A CT the following setting shall be used:

- *CTprim = 1000* (value in A)
- *CTsec =5* (value in A).

Examples on how to connect, configure and set CT inputs for most commonly used CT connections

Figure 13 defines the marking of current transformer terminals commonly used around the world:

In the SMAI function block, you have to set if the SMAI block is measuring current or voltage. This is done with the parameter: *AnalogInputType*: Current/voltage. The *ConnectionType*: phase -phase/ phase-earth and *GlobalBaseSel*.

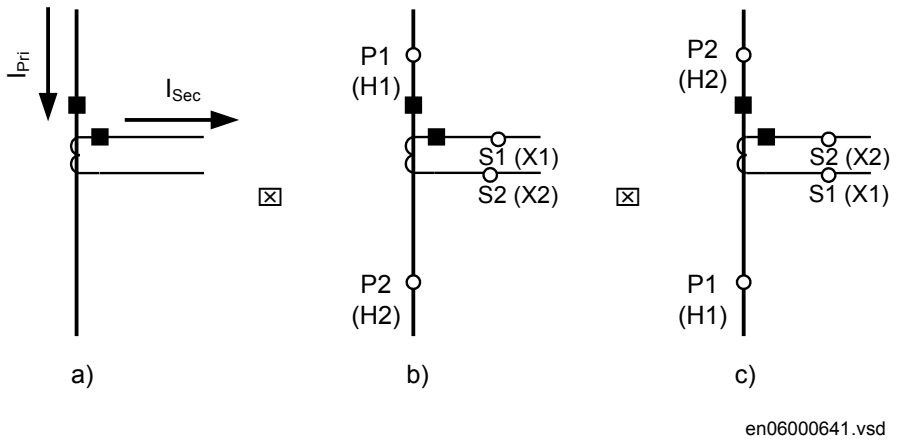

Figure 13: Commonly used markings of CT terminals

Where:

a) is symbol and terminal marking used in this document. Terminals marked with a square indicates the primary and secondary winding terminals with the same (that is, positive) polarity

b) and c) are equivalent symbols and terminal marking used by IEC (ANSI) standard for CTs. Note that for these two cases the CT polarity marking is correct!

It shall be noted that depending on national standard and utility practices, the rated secondary current of a CT has typically one of the following values:

- 1A
- 5A

However in some cases the following rated secondary currents are used as well:

- 2A
- 10A

The IED fully supports all of these rated secondary values.

It is recommended to:

- use 1A rated CT input into the IED in order to connect CTs with 1A and 2A secondary rating
- use 5A rated CT input into the IED in order to connect CTs with 5A and 10A secondary rating

Example on how to connect a wye connected three-phase CT set to the IED

Figure 14 gives an example about the wiring of a wye connected three-phase CT set to the IED. It gives also an overview of the actions which are needed to make this measurement available to the built-in protection and control functions within the IED as well.

For correct terminal designations, see the connection diagrams valid for the delivered IED.

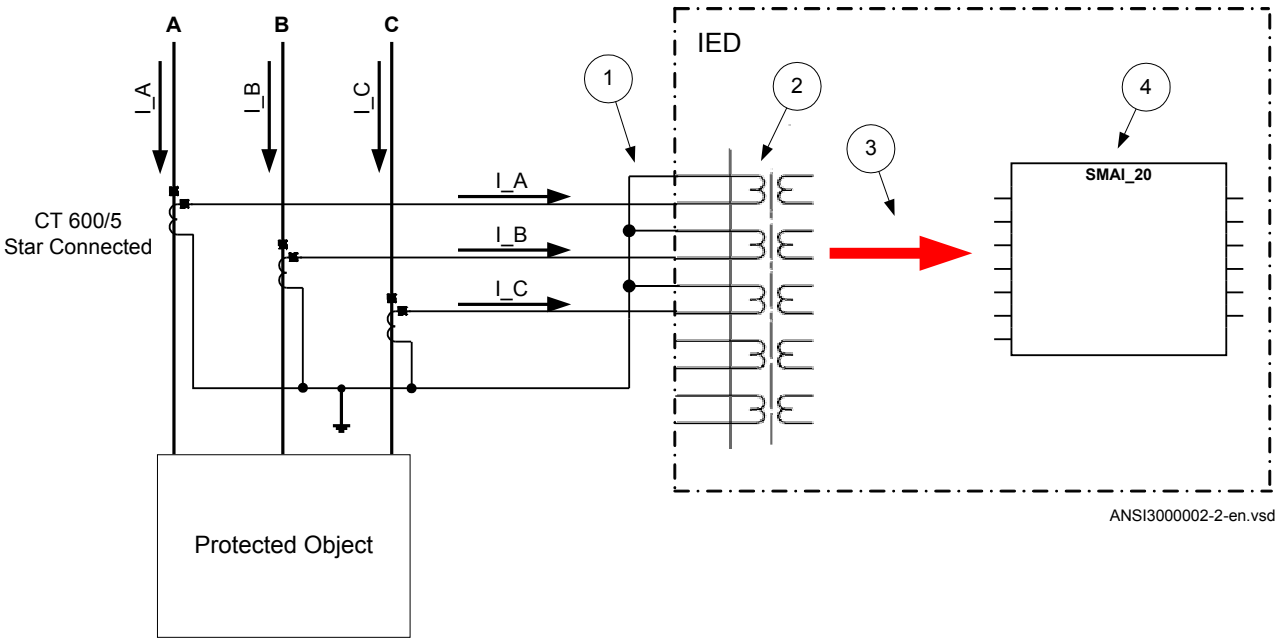

Figure 14: Wye connected three-phase CT set with wye point towards the protected object

Where:

1) The drawing shows how to connect three individual phase currents from a wye connected three-phase CT set to the three CT inputs of the IED.

2) The current inputs are located in the TRM. It shall be noted that for all these current inputs the following setting values shall be entered for the example shown in Figure14.
'

- CTprim=600A
- CTsec=5A
- CTStarPoint=ToObject

Inside the IED only the ratio of the first two parameters is used. The third parameter (CTStarPoint=ToObject) as set in this example causes no change on the measured currents. In other words, currents are already measured towards the protected object.

Table continues on next page

3) These three connections are the links between the three current inputs and the three input channels of the preprocessing function block 4). Depending on the type of functions, which need this current information, more than one preprocessing block might be connected in parallel to the same three physical CT inputs.

4) The preprocessing block that has the task to digitally filter the connected analog inputs and calculate:

- fundamental frequency phasors for all three input channels
- harmonic content for all three input channels
- positive, negative and zero sequence quantities by using the fundamental frequency phasors for the first three input channels (channel one taken as reference for sequence quantities)

These calculated values are then available for all built-in protection and control functions within the IED, which are connected to this preprocessing function block. For this application most of the preprocessing settings can be left to the default values.
If frequency tracking and compensation is required (this feature is typically required only for IEDs installed in power plants), then the setting parameters DFTReference shall be set accordingly.
Section SMAI in this manual provides information on adaptive frequency tracking for the signal matrix for analogue inputs (SMAI).

5) AI3P in the SMAI function block is a grouped signal which contains all the data about the phases L1, L2, L3 and neutral quantity; in particular the data about fundamental frequency phasors, harmonic content and positive sequence, negative and zero sequence quantities are available.
AI1, AI2, AI3, AI4 are the output signals from the SMAI function block which contain the fundamental frequency phasors and the harmonic content of the corresponding input channels of the preprocessing function block.
AIN is the signal which contains the fundamental frequency phasors and the harmonic content of the neutral quantity; this data is calculated by the preprocessing function block on the basis of the inputs GRPL1, GRPL2 and GRPL3.

Another alternative is to have the star point of the three-phase CT set as shown in the figure below:

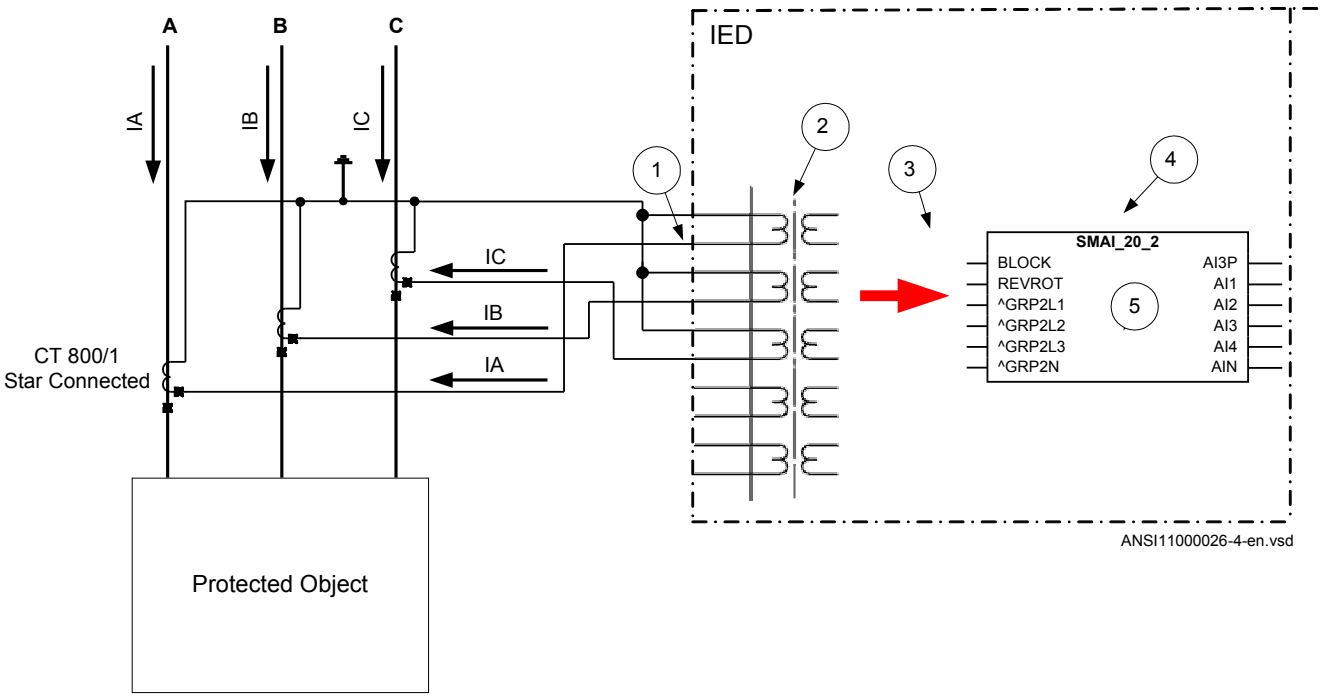

Figure 15: Wye connected three-phase CT set with its star point away from the protected object

In the example in figure 15 case everything is done in a similar way as in the above described example (figure 14). The only difference is the setting of the parameter *CTStarPoint* of the used current inputs on the TRM (item 2 in the figure):

- *CTprim*=600A
- *CTsec*=5A
- *CTWyePoint*=FromObject

Inside the IED only the ratio of the first two parameters is used. The third parameter as set in this example will negate the measured currents in order to ensure that the currents are measured towards the protected object within the IED.

A third alternative is to have the residual/neutral current from the three-phase CT set connected to the IED as shown in the figure below.

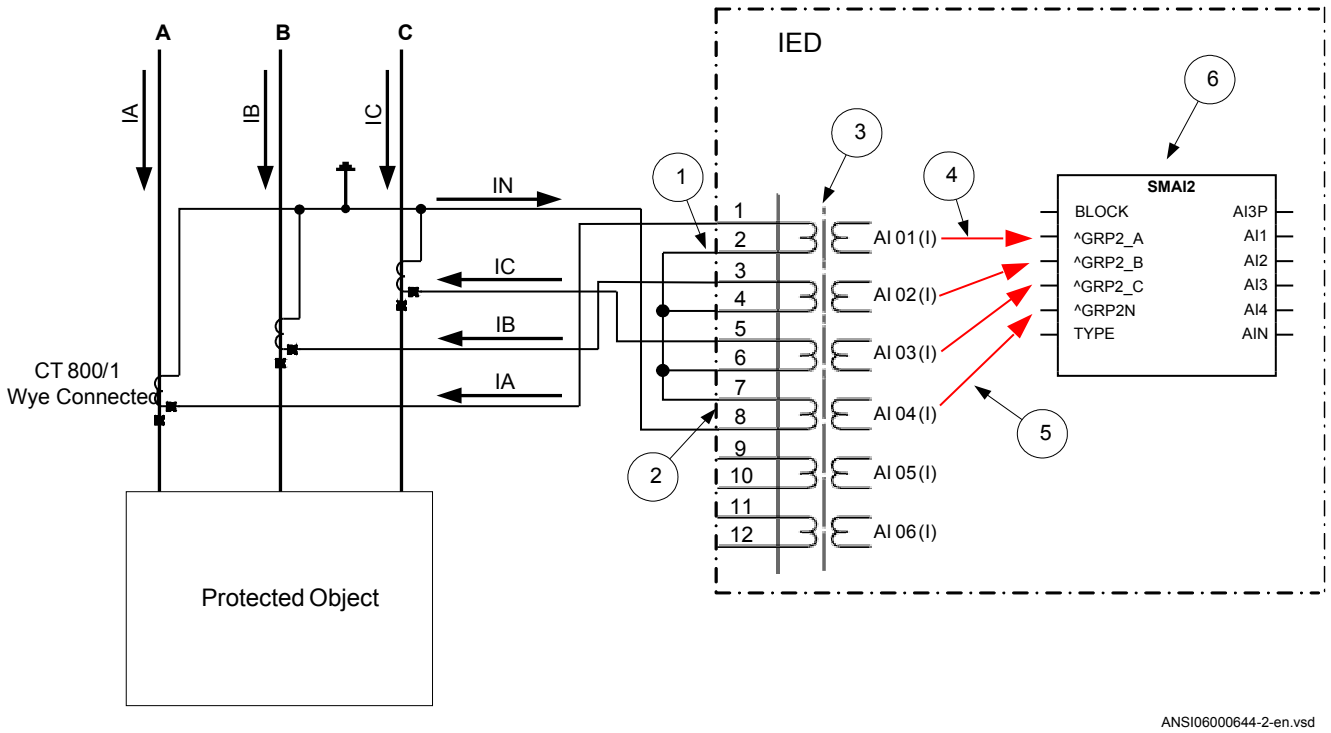

Figure 16: Wye connected three-phase CT set with its star point away from the protected object and the residual/ neutral current connected to the IED

Where:

1) The drawing shows how to connect three individual phase currents from a wye connected three-phase CT set to the three CT inputs of the IED.

2) shows how to connect residual/neutral current from the three-phase CT set to the fourth inputs in the IED. It shall be noted that if this connection is not made, the IED will still calculate this current internally by vectorial summation of the three individual phase currents.

3) is the TRM where these current inputs are located. It shall be noted that for all these current inputs the following setting values shall be entered.

- CTprim=800A
- CTsec=1A
- CTStarPoint=FromObject
- ConnectionType=Ph-N

Inside the IED only the ratio of the first two parameters is used. The third parameter as set in this example will have no influence on the measured currents (that is, currents are already measured towards the protected object).

4) are three connections made in the Signal Matrix tool (SMT), Application configuration tool (ACT), which connects these three current inputs to the first three input channels on the preprocessing function block 6). Depending on the type of functions, which need this current information, more than one preprocessing block might be connected in parallel to these three CT inputs.

Table continues on next page

5) is a connection made in the Signal Matrix tool (SMT), Application configuration tool (ACT), which connects the residual/neutral current input to the fourth input channel of the preprocessing function block 6). Note that this connection in SMT shall not be done if the residual/neutral current is not connected to the IED. In that case the pre-processing block will calculate it by vectorial summation of the three individual phase currents.

6) is a Preprocessing block that has the task to digitally filter the connected analog inputs and calculate:

- fundamental frequency phasors for all four input channels
- harmonic content for all four input channels
- positive, negative and zero sequence quantities by using the fundamental frequency phasors for the first three input channels (channel one taken as reference for sequence quantities)

These calculated values are then available for all built-in protection and control functions within the IED, which are connected to this preprocessing function block in the configuration tool. For this application most of the preprocessing settings can be left to the default values.
If frequency tracking and compensation is required (this feature is typically required only for IEDs installed in the generating stations), then the setting parameters DFTReference shall be set accordingly.

Example how to connect delta connected three-phase CT set to the IED

Figure 17 gives an example how to connect a delta connected three-phase CT set to the IED. It gives an overview of the required actions by the user in order to make this measurement available to the built-in protection and control functions in the IED as well.

For correct terminal designations, see the connection diagrams valid for the delivered IED.

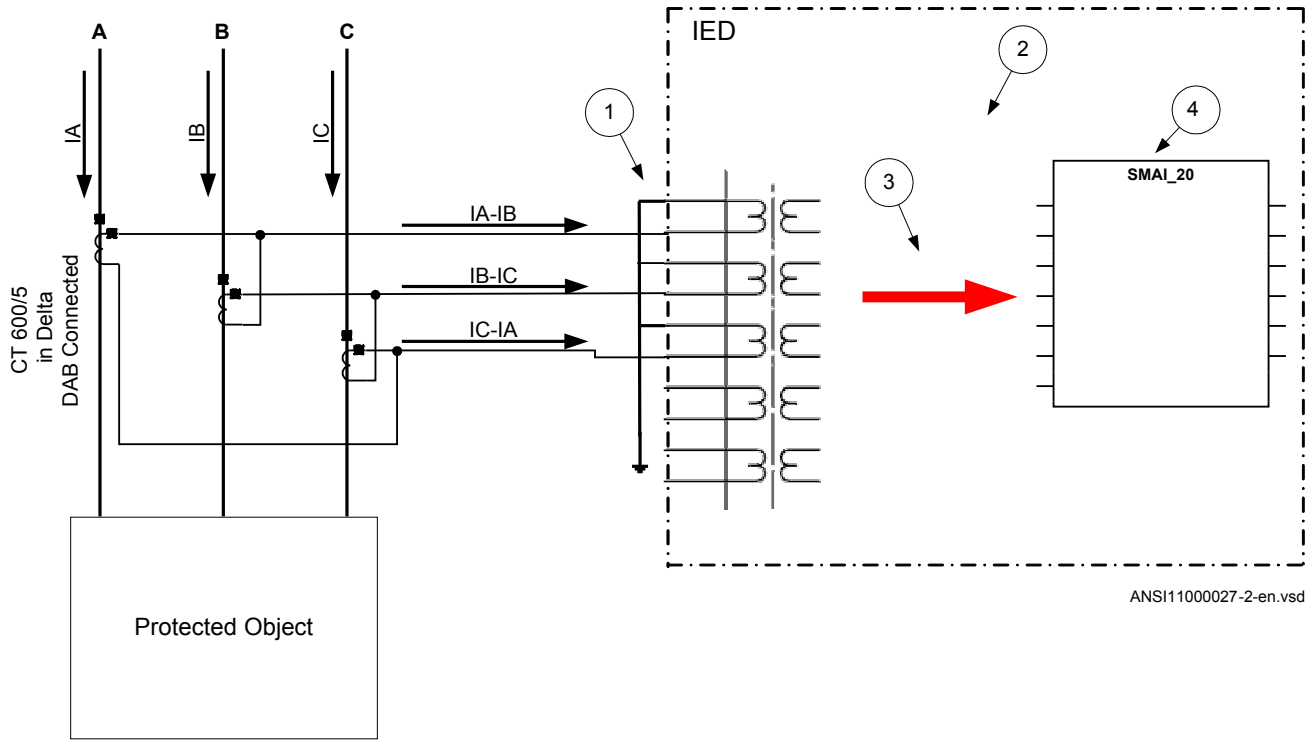

Figure 17: Delta DAB connected three-phase CT set

Where:

1) shows how to connect three individual phase currents from a delta connected three-phase CT set to three CT inputs of the IED.

2) is the TRM where these current inputs are located. It shall be noted that for all these current inputs the following setting values shall be entered.
CT_{prim}=600A
CT_{sec}=5A

- *CTWyePoint=ToObject*
- *ConnectionType=Ph-Ph*

3) are three connections made in Signal Matrix Tool (SMT), Application configuration tool (ACT), which connect these three current inputs to first three input channels of the preprocessing function block 4). Depending on the type of functions which need this current information, more then one preprocessing block might be connected in parallel to these three CT inputs.

4) is a Preprocessing block that has the task to digitally filter the connected analog inputs and calculate:

- fundamental frequency phasors for all three input channels
- harmonic content for all three input channels
- positive, negative and zero sequence quantities by using the fundamental frequency phasors for the first three input channels (channel one taken as reference for sequence quantities)

These calculated values are then available for all built-in protection and control functions within the IED, which are connected to this preprocessing function block. For this application most of the preprocessing settings can be left to the default values.
If frequency tracking and compensation is required (this feature is typically required only for IEDs installed in the generating stations) then the setting parameters *DFTReference* shall be set accordingly.

Another alternative is to have the delta connected CT set as shown in figure 18:

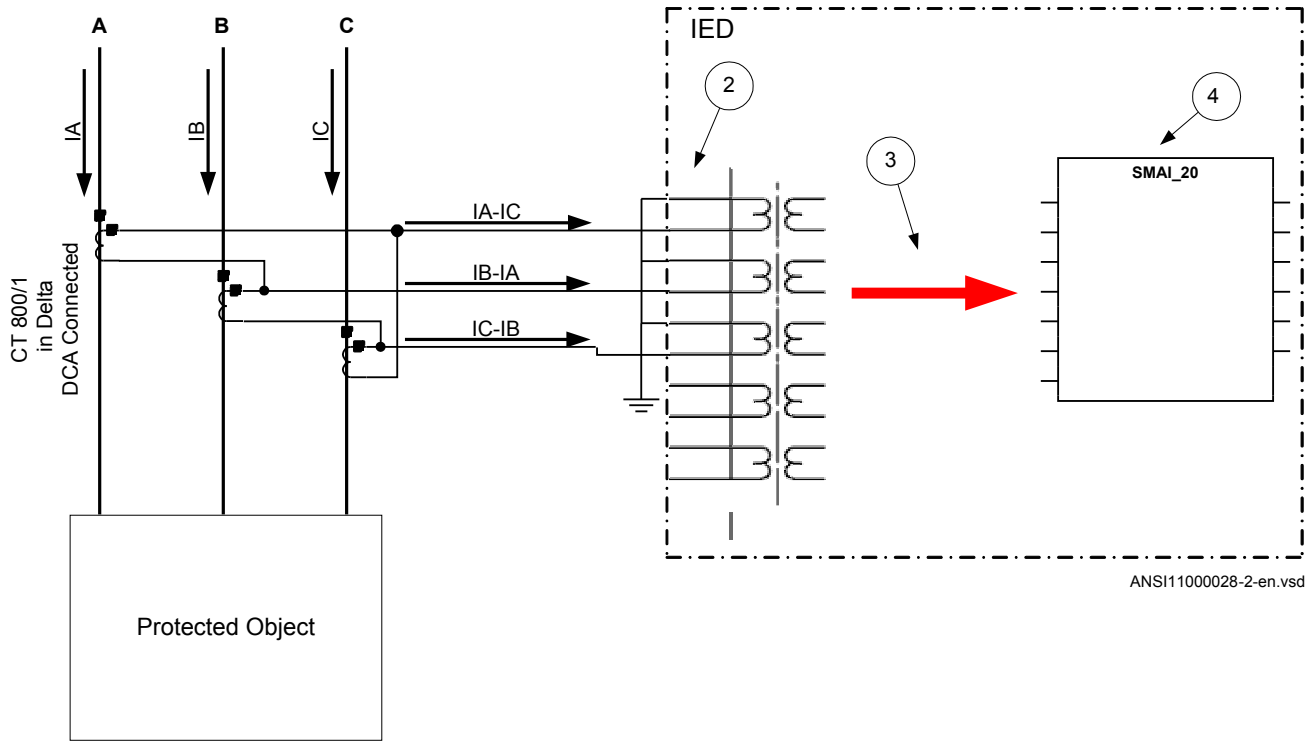

Figure 18: Delta DAC connected three-phase CT set

In this case, everything is done in a similar way as in the above described example, except that for all used current inputs on the TRM the following setting parameters shall be entered:

CT_{prim}=800A

CT_{sec}=1A

- *CTWyePoint*=ToObject
- *ConnectionType=Ph-Ph*

It is important to notice the references in SMAI. As inputs at *Ph-Ph* are expected to be A-B, B-Crespectively C-A we need to tilt 180º by setting *ToObject*.

Example how to connect single-phase CT to the IED

Figure 19 gives an example how to connect the single-phase CT to the IED. It gives an overview of the required actions by the user in order to make this measurement available to the built-in protection and control functions within the IED as well.

For correct terminal designations, see the connection diagrams valid for the delivered IED.

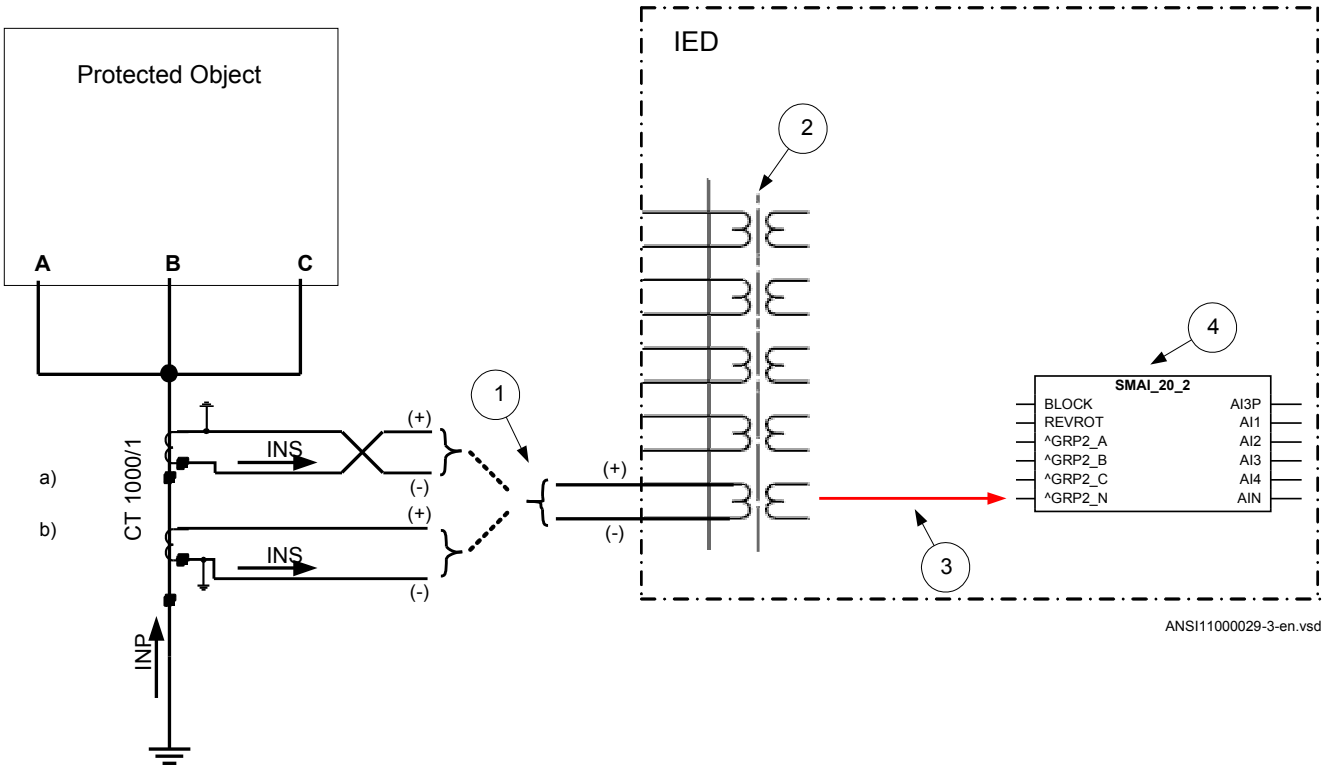

Figure 19: Connections for single-phase CT input

Where:

1) shows how to connect single-phase CT input in the IED.

2) is TRM where these current inputs are located. It shall be noted that for all these current inputs the following setting values shall be entered.
For connection (a) shown in figure 19:
*CT*prim = 1000 A
*CT*sec = 1A
CTWyePoint=ToObject

For connection (b) shown in figure 19:
*CT*prim = 1000 A
*CT*sec = 1A
CTWyePoint=FromObject

3) shows the connection made in SMT tool, which connect this CT input to the fourth input channel of the preprocessing function block 4).

4) is a Preprocessing block that has the task to digitally filter the connected analog inputs and calculate values. The calculated values are then available for all built-in protection and control functions within the IED, which are connected to this preprocessing function block. If frequency tracking and compensation is required (this feature is typically required only for IEDs installed in the power plants) then the setting parameters *DFTReference* shall be set accordingly.

Setting of voltage channels

As the IED uses primary system quantities the main VT ratios must be known to the IED. This is done by setting the two parameters *VTsec* and *VTprim* for each voltage channel. The phase-to-phase value can be used even if each channel is connected to a phase-to-ground voltage from the VT.

Example

Consider a VT with the following data:

$$\frac{132\text{kV}}{\sqrt{3}} \Big/ \frac{120\text{V}}{\sqrt{3}}$$

(Equation 1)

The following setting should be used: *VTprim=132* (value in kV) *VTsec=120* (value in V)

Examples how to connect, configure and set VT inputs for most commonly used VT connections

Figure 20 defines the marking of voltage transformer terminals commonly used around the world.

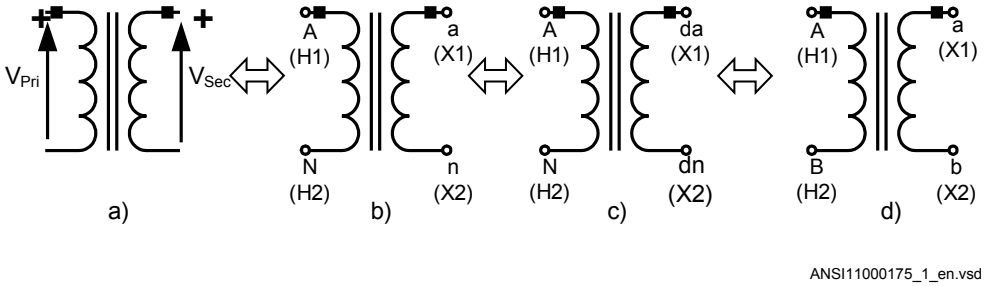

Figure 20: Commonly used markings of VT terminals

Where:

a) is the symbol and terminal marking used in this document. Terminals marked with a square indicate the primary and secondary winding terminals with the same (positive) polarity

b) is the equivalent symbol and terminal marking used by IEC (ANSI) standard for phase-to-ground connected VTs

c) is the equivalent symbol and terminal marking used by IEC (ANSI) standard for open delta connected VTs

d) is the equivalent symbol and terminal marking used by IEC (ANSI) standard for phase-to-phase connected VTs

It shall be noted that depending on national standard and utility practices the rated secondary voltage of a VT has typically one of the following values:

- 100 V
- 110 V
- 115 V
- 120 V
- 230 V

The IED fully supports all of these values and most of them will be shown in the following examples.

Examples on how to connect a three phase-to-ground connected VT to the IED

Figure 21 gives an example on how to connect the three phase-to-ground connected VT to the IED. It as well gives overview of required actions by the user in order to make this measurement available to the built-in protection and control functions within the IED.

For correct terminal designations, see the connection diagrams valid for the delivered IED.

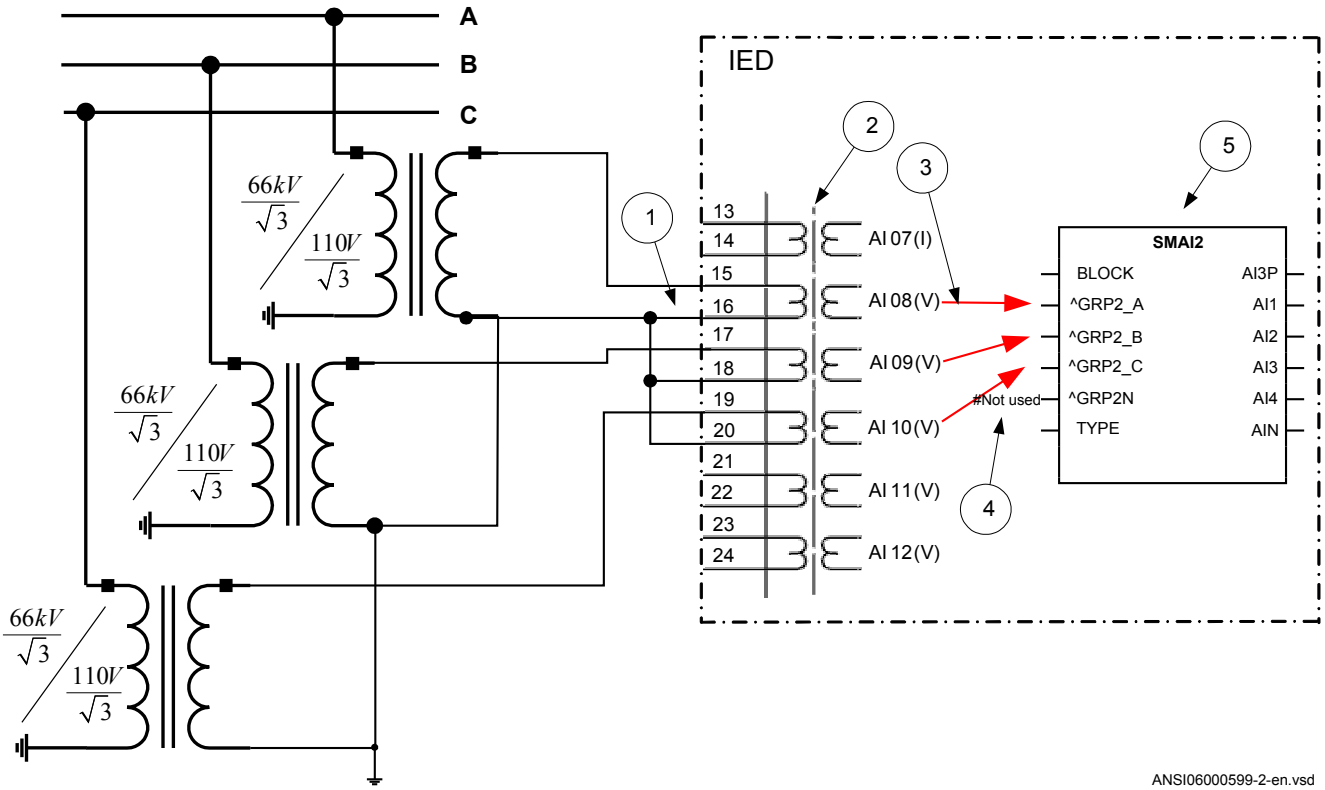

Figure 21: A Three phase-to-ground connected VT

Where:

1) shows how to connect three secondary phase-to-ground voltages to three VT inputs on the IED

2) is the TRM where these three voltage inputs are located. For these three voltage inputs, the following setting values shall be entered:
VTprim = 66 kV
VTsec = 110 V
Inside the IED, only the ratio of these two parameters is used. It shall be noted that the ratio of the entered values exactly corresponds to ratio of one individual VT.

$$\frac{66}{110} = \frac{66/\sqrt{3}}{110/\sqrt{3}}$$

(Equation 2)

Table continues on next page

3) are three connections made in Signal Matrix Tool (SMT), which connect these three voltage inputs to first three input channels of the preprocessing function block 5). Depending on the type of functions which need this voltage information, more then one preprocessing block might be connected in parallel to these three VT inputs.

4) shows that in this example the fourth (that is, residual) input channel of the preprocessing block is not connected in SMT tool. Thus the preprocessing block will automatically calculate 3Vo inside by vectorial sum from the three phase to ground voltages connected to the first three input channels of the same preprocessing block. Alternatively, the fourth input channel can be connected to open delta VT input, as shown in figure 23.

5) is a Preprocessing block that has the task to digitally filter the connected analog inputs and calculate:

- fundamental frequency phasors for all four input channels
- harmonic content for all four input channels
- positive, negative and zero sequence quantities by using the fundamental frequency phasors for the first three input channels (channel one taken as reference for sequence quantities)

These calculated values are then available for all built-in protection and control functions within the IED, which are connected to this preprocessing function block in the configuration tool. For this application most of the preprocessing settings can be left to the default values. However the following settings shall be set as shown here:
VBase=66 kV (that is, rated Ph-Ph voltage)
If frequency tracking and compensation is required (this feature is typically required only for IEDs installed in the generating stations) then the setting parameters *DFTReference* shall be set accordingly.

Example on how to connect a phase-to-phase connected VT to the IED

Figure 22 gives an example how to connect a phase-to-phase connected VT to the IED. It gives an overview of the required actions by the user in order to make this measurement available to the built-in protection and control functions within the IED as well. It shall be noted that this VT connection is only used on lower voltage levels (that is, rated primary voltage below 40 kV).

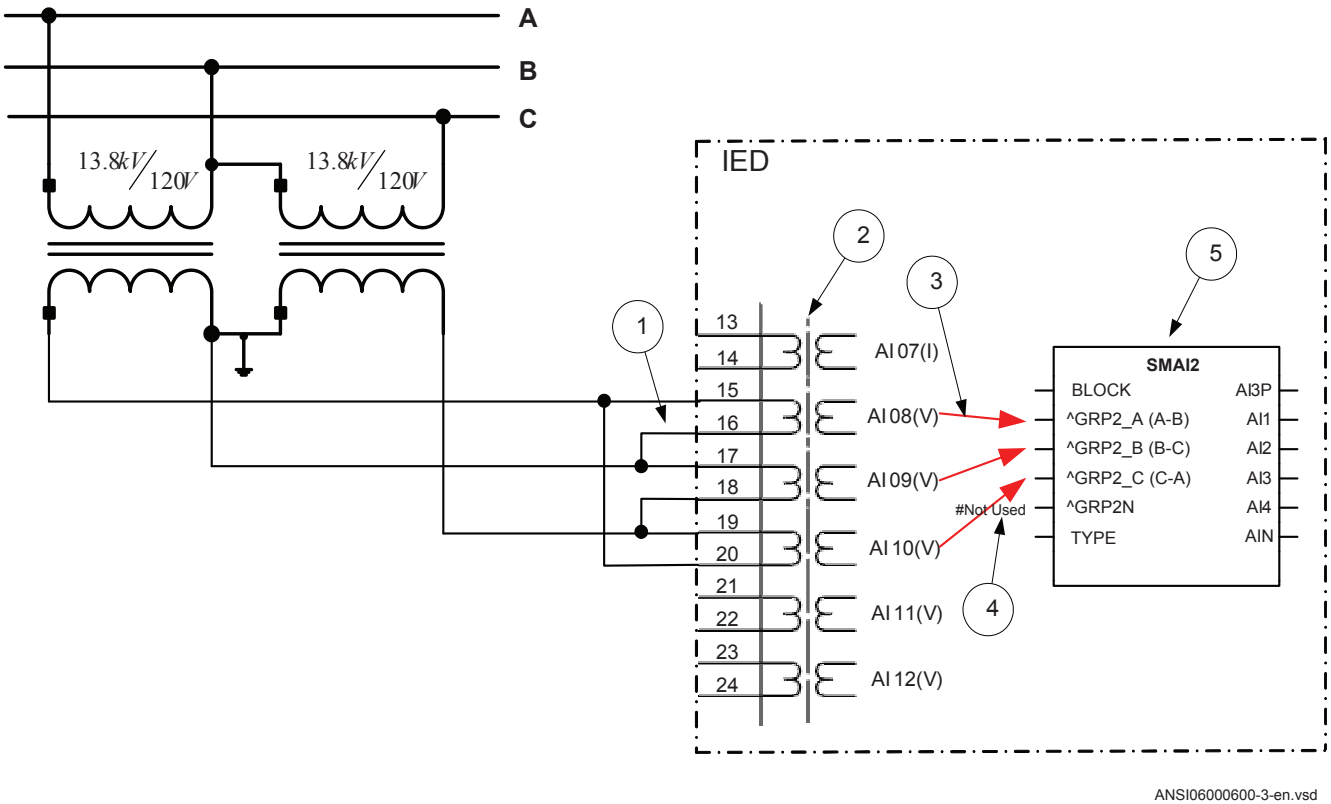

Figure 22: A Two phase-to-phase connected VT

Where:

1) shows how to connect the secondary side of a phase-to-phase VT to the VT inputs on the IED

2) is the TRM where these three voltage inputs are located. It shall be noted that for these three voltage inputs the following setting values shall be entered:
VTprim=13.8 kV
VTsec=120 V
Please note that inside the IED only ratio of these two parameters is used.

Table continues on next page

3) are three connections made in the Signal Matrix tool (SMT), Application configuration tool (ACT), which connects these three voltage inputs to first three input channels of the preprocessing function block 5). Depending on the type of functions, which need this voltage information, more than one preprocessing block might be connected in parallel to these three VT inputs

4) shows that in this example the fourth (that is, residual) input channel of the preprocessing block is not connected in SMT. Note. If the paameters V_A, V_B, V_C, V_N should be used the open delta must be connected here.

5) Preprocessing block has a task to digitally filter the connected analog inputs and calculate:

- fundamental frequency phasors for all four input channels
- harmonic content for all four input channels
- positive, negative and zero sequence quantities by using the fundamental frequency phasors for the first three input channels (channel one taken as reference for sequence quantities)

These calculated values are then available for all built-in protection and control functions within the IED, which are connected to this preprocessing function block in the configuration tool. For this application most of the preprocessing settings can be left to the default values. However the following settings shall be set as shown here:
ConnectionType=Ph-Ph
VBase=13.8 kV
If frequency tracking and compensation is required (this feature is typically required only for IEDs installed in the generating stations) then the setting parameters *DFTReference* shall be set accordingly.

Example on how to connect an open delta VT to the IED for high impedance grounded or ungrounded netwoeks

Figure 23 gives an example about the wiring of an open delta VT to the IED for high impedance grounded or ungrounded power systems. It shall be noted that this type of VT connection presents a secondary voltage proportional to 3V0 to the IED.

In case of a solid ground fault close to the VT location the primary value of 3Vo will be equal to:

$$3Vo = \sqrt{3} \cdot V_{Ph-Ph} = 3 \cdot V_{Ph-Gnd}$$

(Equation 3)

The primary rated voltage of an open Delta VT is always equal to $V_{Ph\text{-}Gnd}$. Three series connected VT secondary windings gives a secondary voltage equal to three times the individual VT secondary winding rating. Thus the secondary windings of open delta VTs quite often have a secondary rated voltage equal to one third of the rated phase-to-phase VT secondary voltage (110/3V in this particular example).

Figure 23 gives overview of required actions by the user in order to make this measurement available to the built-in protection and control functions within the IED as well.

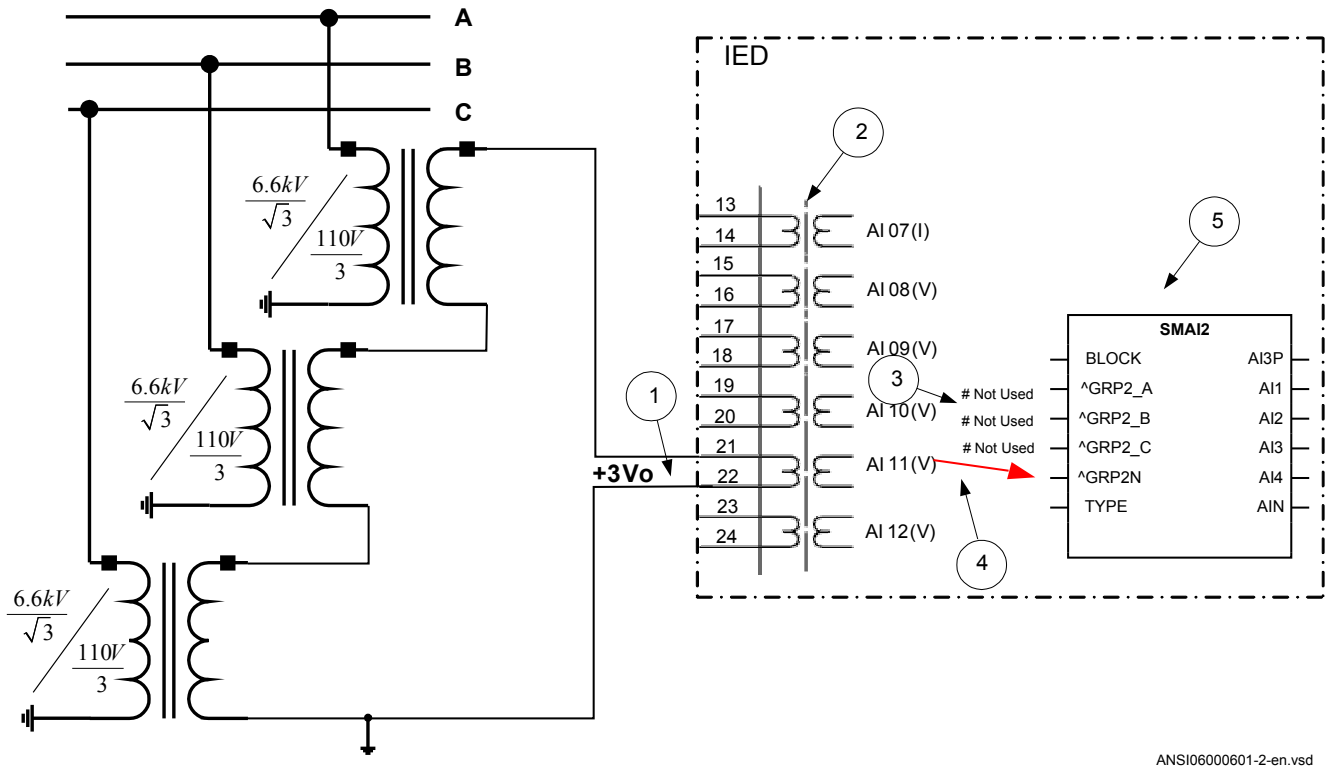

Figure 23: Open delta connected VT in high impedance grounded power system

Where:

1) shows how to connect the secondary side of the open delta VT to one VT input on the IED.

+3Vo shall be connected to the IED

2) is the TRM where this voltage input is located. It shall be noted that for this voltage input the following setting values shall be entered:

$$VTprim = \sqrt{3} \cdot 6.6 = 11.43kV$$

(Equation 4)

$$VT\sec = 3 \cdot \frac{110}{3} = 110V$$

(Equation 5)

Inside the IED, only the ratio of these two parameters is used. It shall be noted that the ratio of the entered values exactly corresponds to ratio of one individual open delta VT.

$$\frac{\sqrt{3} \cdot 6.6}{110} = \frac{6.6/\sqrt{3}}{110/3}$$

(Equation 6)

3) shows that in this example the first three input channel of the preprocessing block is not connected in SMT tool or ACT tool.

4) shows the connection made in Signal Matrix Tool (SMT), Application configuration tool (ACT), which connect this voltage input to the fourth input channel of the preprocessing function block 5).

5) is a Preprocessing block that has the task to digitally filter the connected analog input and calculate:

- fundamental frequency phasors for all four input channels
- harmonic content for all four input channels
- positive, negative and zero sequence quantities by using the fundamental frequency phasors for the first three input channels (channel one taken as reference for sequence quantities)

These calculated values are then available for all built-in protection and control functions within the IED, which are connected to this preprocessing function block in the configuration tool. For this application most of the preprocessing settings can be left to the default values. If frequency tracking and compensation is required (this feature is typically required only for IEDs installed in the generating stations) then the setting parameters *DFTReference* shall be set accordingly.

Example how to connect the open delta VT to the IED for low impedance grounded or solidly grounded power systems

Figure 24 gives an example about the connection of an open delta VT to the IED for low impedance grounded or solidly grounded power systems. It shall be noted that this type of VT connection presents secondary voltage proportional to $3V_0$ to the IED.

In case of a solid ground fault close to the VT location the primary value of 3Vo will be equal to:

$$3Vo = \frac{V_{Ph-Ph}}{\sqrt{3}} = V_{Ph-Gnd}$$

(Equation 7)

The primary rated voltage of such VT is always equal to VPh-Gnd. Therefore, three series connected VT secondary windings will give the secondary voltage equal only to one individual VT secondary winding rating. Thus the secondary windings of such open delta VTs quite often has a secondary rated voltage close to rated phase-to-phase VT secondary voltage, that is, 115V or 115/√3V as in this particular example. Figure 24 gives an overview of the actions which are needed to make this measurement available to the built-in protection and control functions within the IED.

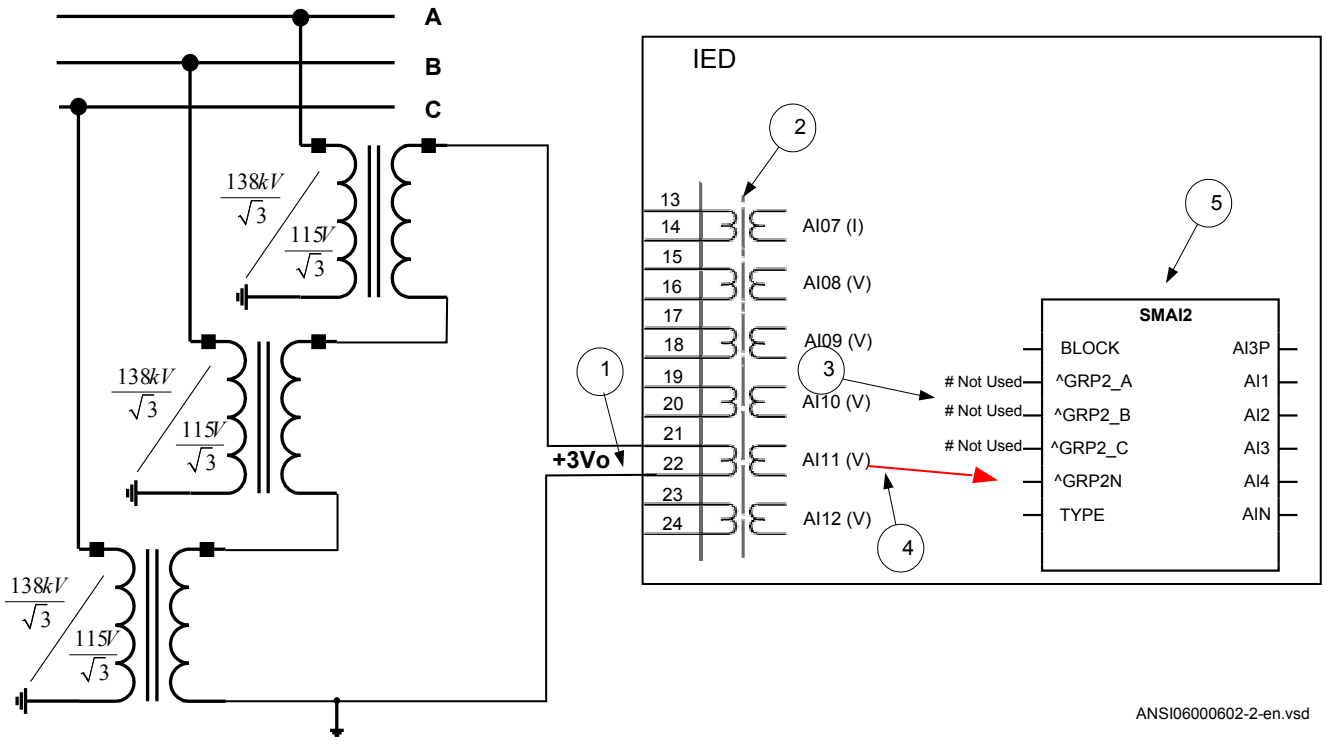

Figure 24: Open delta connected VT in low impedance or solidly grounded power system

Where:

1) shows how to connect the secondary side of open delta VT to one VT input in the IED.

+3Vo shall be connected to the IED.

2) is TRM where this voltage input is located. It shall be noted that for this voltage input the following setting values shall be entered:

$$VTprim = \sqrt{3} \cdot \frac{138}{\sqrt{3}} = 138kV$$

(Equation 8)

$$VT\sec = \sqrt{3} \cdot \frac{115}{\sqrt{3}} = 115V$$

(Equation 9)

Inside the IED, only the ratio of these two parameters is used. It shall be noted that the ratio of the entered values exactly corresponds to ratio of one individual open delta VT.

$$\frac{138}{115} = \frac{138/\sqrt{3}}{115/\sqrt{3}}$$

(Equation 10)

3) shows that in this example the first three input channel of the preprocessing block is not connected in SMT tool.

4) shows the connection made in Signal Matrix Tool (SMT), which connect this voltage input to the fourth input channel of the preprocessing function block 4).

5) preprocessing block has a task to digitally filter the connected analog inputs and calculate:

- fundamental frequency phasors for all four input channels
- harmonic content for all four input channels
- positive, negative and zero sequence quantities by using the fundamental frequency phasors for the first three input channels (channel one taken as reference for sequence quantities)

These calculated values are then available for all built-in protection and control functions within the IED, which are connected to this preprocessing function block in the configuration tool. For this application most of the preprocessing settings can be left to the default values.
If frequency tracking and compensation is required (this feature is typically required only for IEDs installed in the generating stations) then the setting parameters *DFTReference* shall be set accordingly.

Example on how to connect a neutral point VT to the IED

Figure 25 gives an example on how to connect a neutral point VT to the IED. This type of VT connection presents secondary voltage proportional to V_0 to the IED.

In case of a solid ground fault in high impedance grounded or ungrounded systems the primary value of V_0 voltage will be equal to:

$$V0 = \frac{V_{ph-ph}}{\sqrt{3}} = V_{ph-Gnd}$$

(Equation 11)

Figure 25 gives an overview of required actions by the user in order to make this measurement available to the built-in protection and control functions within the IED as well.

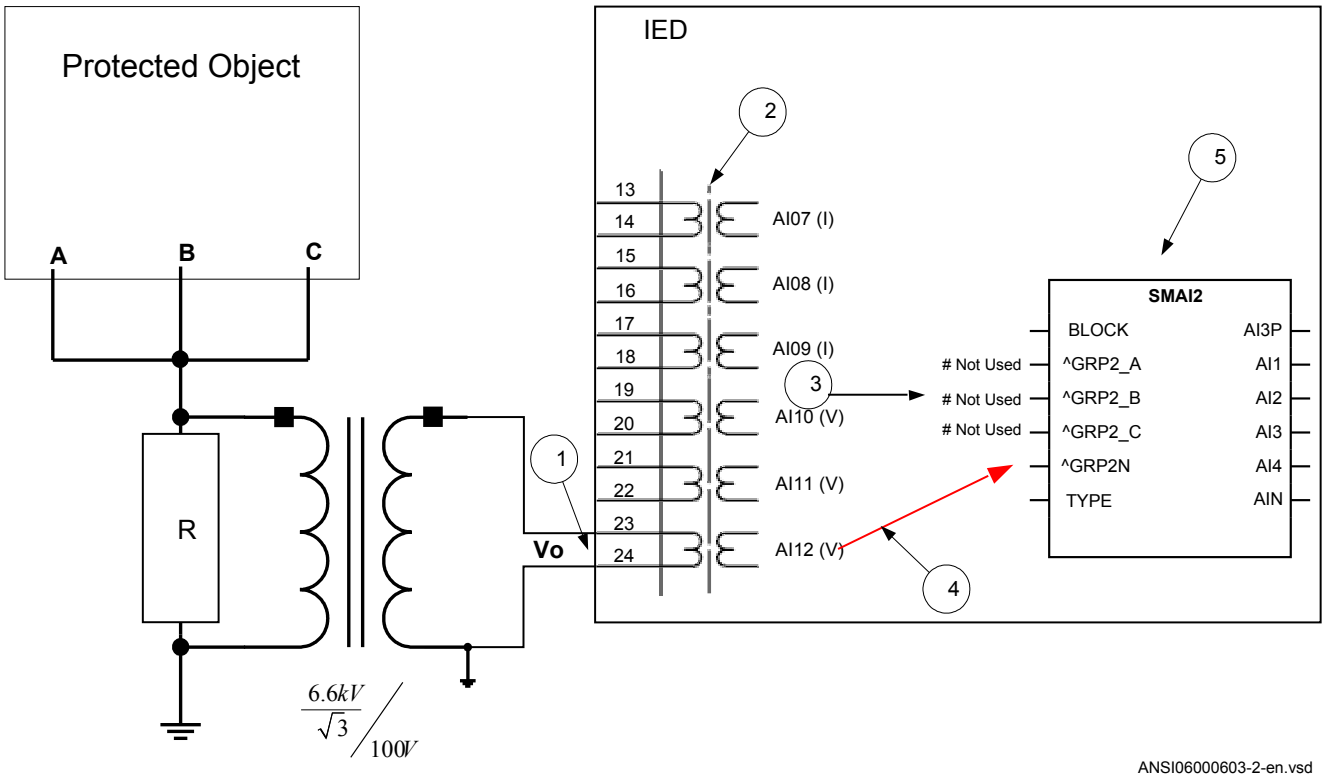

Figure 25: Neutral point connected VT

Where:

1) shows how to connect the secondary side of neutral point VT to one VT input in the IED.

V_0 shall be connected to the IED.

2) is the TRM or AIM where this voltage input is located. For this voltage input the following setting values shall be entered:

$$VTprim = \frac{6.6}{\sqrt{3}} = 3.81kV$$

(Equation 12)

$$VT\sec = 100V$$

(Equation 13)

Inside the IED, only the ratio of these two parameters is used. It shall be noted that the ratio of the entered values exactly corresponds to ratio of the neutral point VT.

3) shows that in this example the first three input channel of the preprocessing block is not connected in SMT tool or ACT tool.

4) shows the connection made in Signal Matrix Tool (SMT), Application configuration tool (ACT), which connects this voltage input to the fourth input channel of the preprocessing function block 5).

5) is a preprocessing block that has the task to digitally filter the connected analog inputs and calculate:

- fundamental frequency phasors for all four input channels
- harmonic content for all four input channels
- positive, negative and zero sequence quantities by using the fundamental frequency phasors for the first three input channels (channel one taken as reference for sequence quantities)

These calculated values are then available for all built-in protection and control functions within the IED, which are connected to this preprocessing function block in the configuration tool. For this application most of the preprocessing settings can be left to the default values.
If frequency tracking and compensation is required (this feature is typically required only for IEDs installed in the generating stations) then the setting parameters *DFTReference* shall be set accordingly.

Section 5 Local HMI

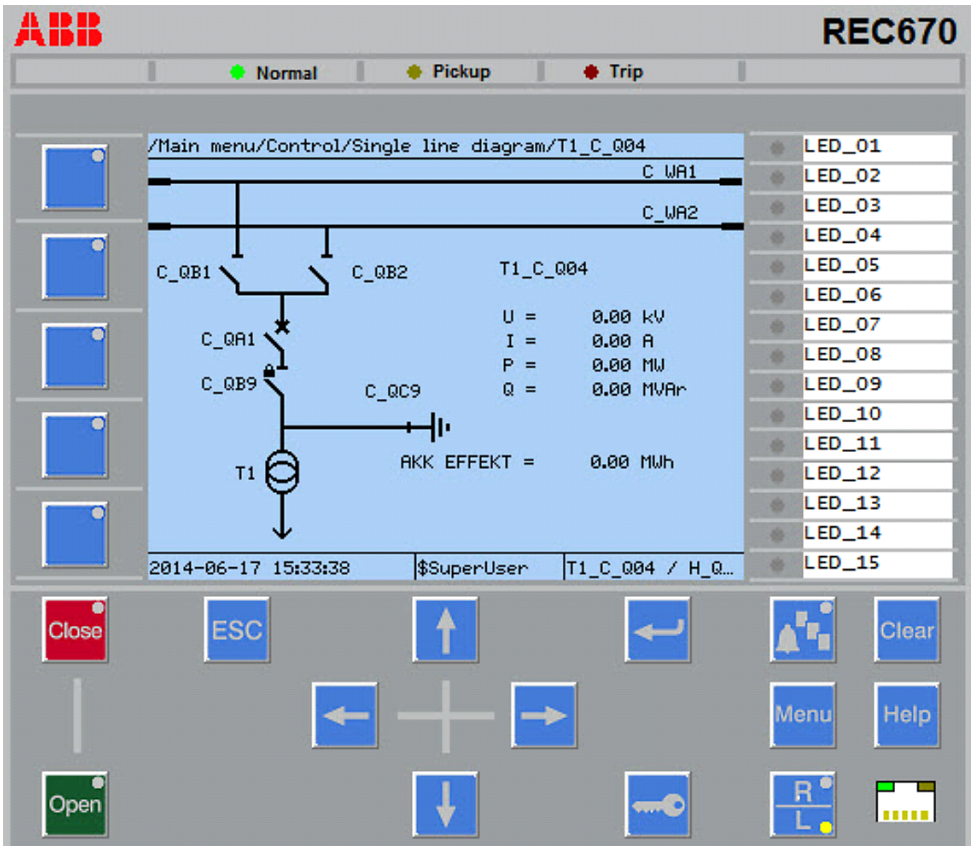

ANSI13000239-1-en.vsd

Figure 26: Local human-machine interface

The LHMI of the IED contains the following elements:

- Display (LCD)
- Buttons
- LED indicators
- Communication port for PCM600

The LHMI is used for setting, monitoring and controlling.

5.1 Display

The LHMI includes a graphical monochrome display with a resolution of 320 x 240 pixels. The character size can vary.

The display view is divided into four basic areas.

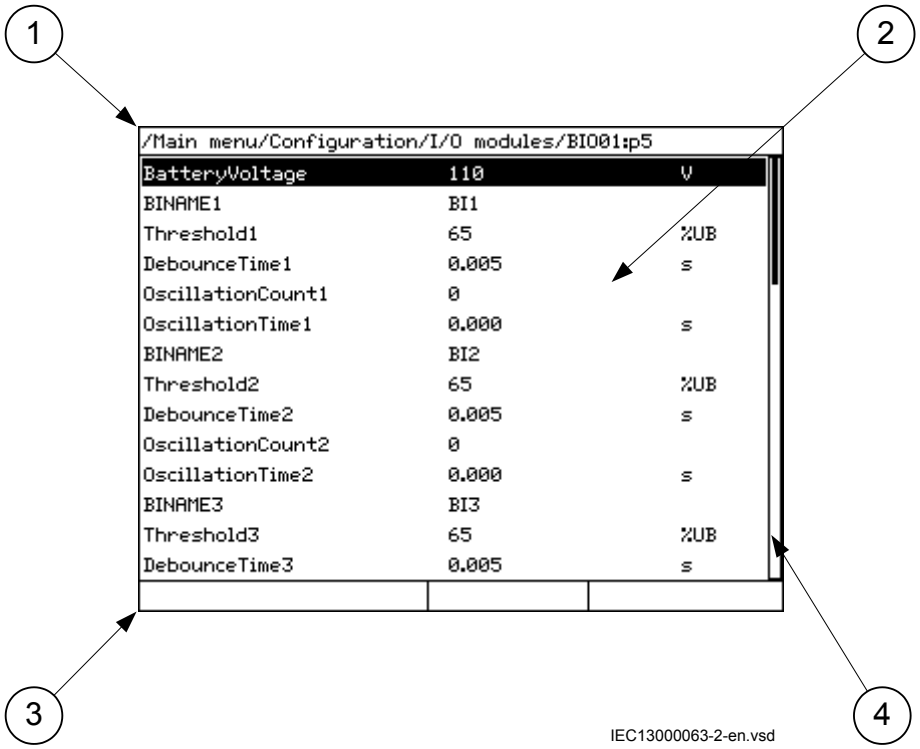

Figure 27: Display layout

1 Path
2 Content
3 Status
4 Scroll bar (appears when needed)

The function button panel shows on request what actions are possible with the function buttons. Each function button has a LED indication that can be used as a feedback signal for the function button control action. The LED is connected to the required signal with PCM600.

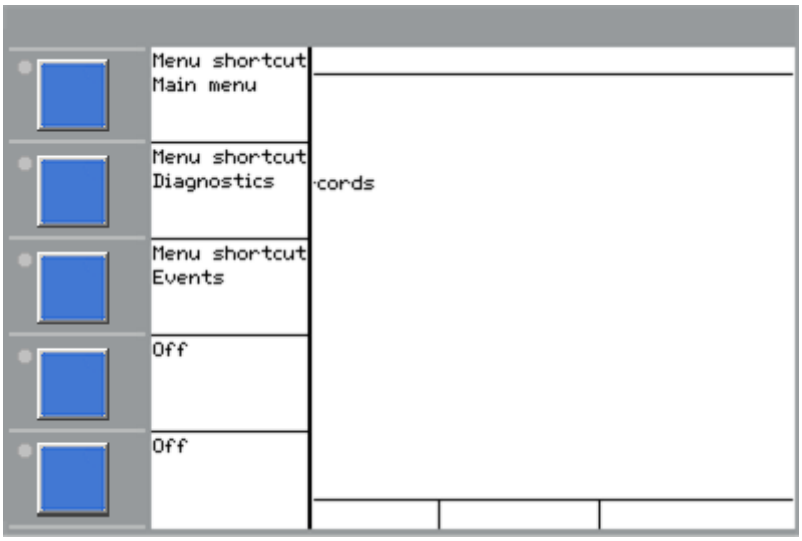

IEC13000281-1-en.vsd

Figure 28: Function button panel

The alarm LED panel shows on request the alarm text labels for the alarm LEDs. Three alarm LED pages are available.

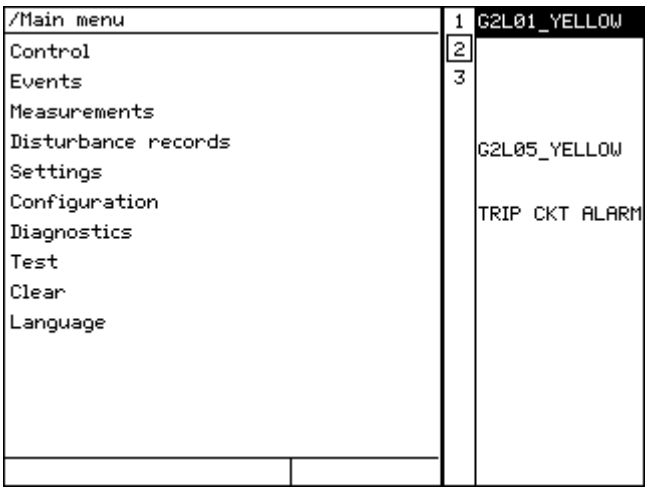

IEC13000240-1-en.vsd

Figure 29: Alarm LED panel

The function button and alarm LED panels are not visible at the same time. Each panel is shown by pressing one of the function buttons or the Multipage button. Pressing the ESC button clears the panel from the display. Both the panels have dynamic width that depends on the label string length that the panel contains.

5.2 LEDs

The LHMI includes three protection status LEDs above the display: Normal, Pickup and Trip.

There are 15 programmable alarm LEDs on the front of the LHMI. Each LED can indicate three states with the colors: green, yellow and red. The alarm texts related to each three-color LED are divided into three pages.

There are 3 separate pages of LEDs available. The 15 physical three-color LEDs in one LED group can indicate 45 different signals. Altogether, 135 signals can be indicated since there are three LED groups. The LEDs are lit according to priority, with red being the highest and green the lowest priority. For example, if on one page there is an indication that requires the green LED to be lit, and on another page there is an indication that requires the red LED to be lit, the red LED takes priority and is lit. The LEDs can be configured with PCM600 and the operation mode can be selected with the LHMI or PCM600.

Information pages for the alarm LEDs are shown by pressing the Multipage button. Pressing that button cycles through the three pages. A lit or un-acknowledged LED is indicated with a highlight. Such lines can be selected by using the Up / Down arrow buttons. Pressing the Enter key shows details about the selected LED. Pressing the ESC button exits from information pop-ups as well as from the LED panel as such.

The Multipage button has a LED. This LED is lit whenever any LED on any page is lit. If there are un-acknowledged alarm LEDs, then the Multipage LED blinks. To acknowledge LEDs, press the Clear button to enter the Reset menu (refer to description of this menu for details).

There are two additional LEDs which are next to the control buttons 

and 

. They represent the status of the circuit breaker.

5.3 Keypad

The LHMI keypad contains push-buttons which are used to navigate in different views or menus. The push-buttons are also used to acknowledge alarms, reset indications, provide help and switch between local and remote control mode.

The keypad also contains programmable push-buttons that can be configured either as menu shortcut or control buttons.

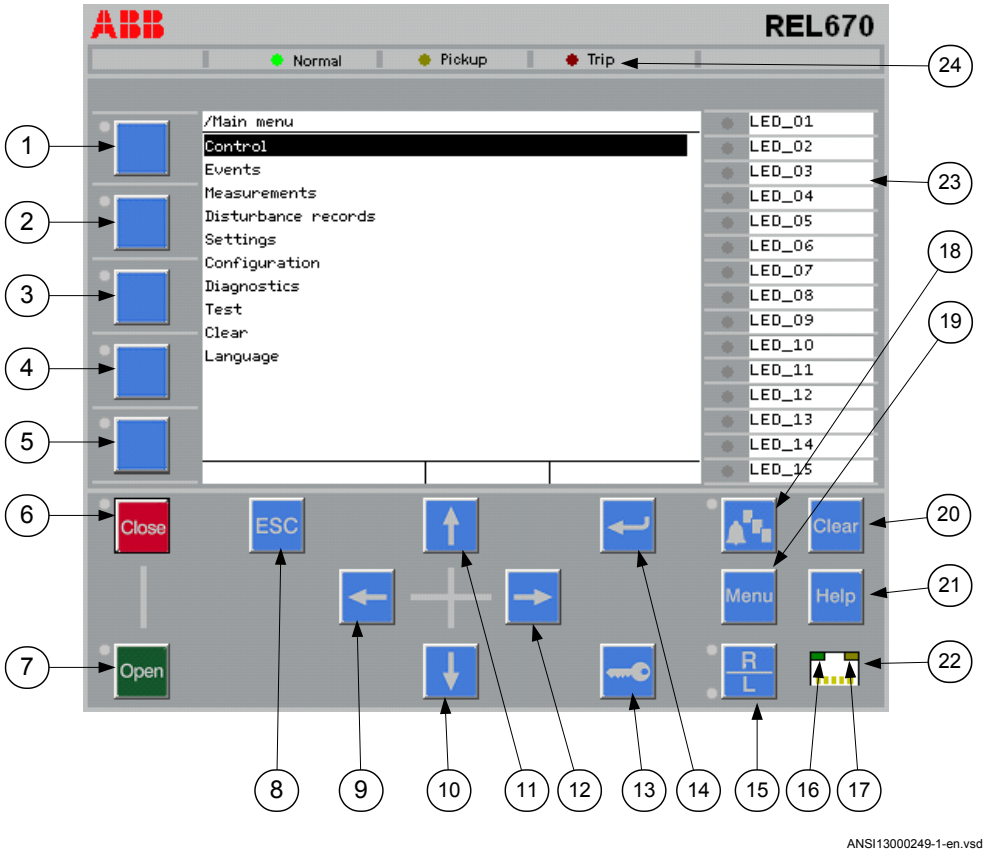

Figure 30: LHMI keypad with object control, navigation and command push-buttons and RJ-45 communication port

1...5	Function button
6	Close
7	Open
8	Escape
9	Left
10	Down
11	Up
12	Right
13	Key
14	Enter
15	Remote/Local
16	Uplink LED
17	Not in use
18	Multipage
19	Menu

20 Clear
21 Help
22 Communication port
23 Programmable alarm LEDs
24 Protection status LEDs

5.4 Local HMI functionality

5.4.1 Protection and alarm indication

Protection indicators

The protection indicator LEDs are Normal, Pickup and Trip.

Table 7: Normal LED (green)

LED state	Description
Off	Auxiliary supply voltage is disconnected.
On	Normal operation.
Flashing	Internal fault has occurred.

Table 8: PickUp LED (yellow)

LED state	Description
Off	Normal operation.
On	A protection function has picked up and an indication message is displayed. The pick up indication is latching and must be reset via communication, LHMI or binary input on the LEDGEN component. To open the reset menu on the LHMI, press Clear.
Flashing	The IED is in test mode and protection functions are blocked, or the IEC61850 protocol is blocking one or more functions. The indication disappears when the IED is no longer in test mode and blocking is removed. The blocking of functions through the IEC61850 protocol can be reset in **Main menu/Test/Reset IEC61850 Mod**. The yellow LED changes to either On or Off state depending on the state of operation.

Table 9: Trip LED (red)

LED state	Description
Off	Normal operation.
On	A protection function has tripped. An indication message is displayed if the auto-indication feature is enabled in the local HMI. The trip indication is latching and must be reset via communication, LHMI or binary input on the LEDGEN component. To open the reset menu on the LHMI, press Clear.

Alarm indicators

The 15 programmable three-color LEDs are used for alarm indication. An individual alarm/status signal, connected to any of the LED function blocks, can be assigned to one of the three LED colors when configuring the IED.

Table 10: Alarm indications

LED state	Description
Off	Normal operation. All activation signals are off.
On	• Follow-S sequence: The activation signal is on. • LatchedColl-S sequence: The activation signal is on, or it is off but the indication has not been acknowledged. • LatchedAck-F-S sequence: The indication has been acknowledged, but the activation signal is still on. • LatchedAck-S-F sequence: The activation signal is on, or it is off but the indication has not been acknowledged. • LatchedReset-S sequence: The activation signal is on, or it is off but the indication has not been acknowledged.
Flashing	• Follow-F sequence: The activation signal is on. • LatchedAck-F-S sequence: The activation signal is on, or it is off but the indication has not been acknowledged. • LatchedAck-S-F sequence: The indication has been acknowledged, but the activation signal is still on.

5.4.2 Parameter management

The LHMI is used to access the IED parameters. Three types of parameters can be read and written.

- Numerical values
- String values
- Enumerated values

Numerical values are presented either in integer or in decimal format with minimum and maximum values. Character strings can be edited character by character. Enumerated values have a predefined set of selectable values.

5.4.3 Front communication

The RJ-45 port in the LHMI enables front communication.

- The green uplink LED on the left is lit when the cable is successfully connected to the port.
- The yellow LED is not used; it is always off.

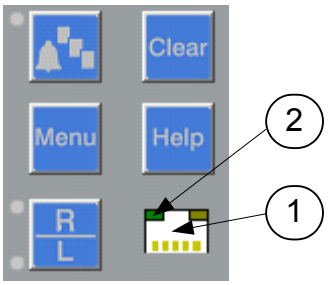

IEC13000280-1-en.vsd

Figure 31: RJ-45 communication port and green indicator LED

1 RJ-45 connector

2 Green indicator LED

The default IP address for the IED front port is 10.1.150.3 and the corresponding subnetwork mask is 255.255.255.0. It can be set through the local HMI path **Main menu/Configuration/Communication/Ethernet configuration/FRONT:1**.

Do not connect the IED front port to a LAN. Connect only a single local PC with PCM600 to the front port. It is only intended for temporary use, such as commissioning and testing.

Section 6 Differential protection

6.1 1Ph High impedance differential protection HZPDIF (87)

6.1.1 Identification

Function description	IEC 61850 identification	IEC 60617 identification	ANSI/IEEE C37.2 device number
1Ph High impedance differential protection	HZPDIF	*Id*	87

6.1.2 Application

The 1Ph High impedance differential protection function HZPDIF (87) can be used as:

- Generator differential protection
- Reactor differential protection
- Busbar differential protection
- Autotransformer differential protection (for common and serial windings only)
- T-feeder differential protection
- Capacitor differential protection
- Restricted ground fault protection for transformer, generator and shunt reactor windings
- Restricted ground fault protection

The application is dependent on the primary system arrangements and location of breakers, available CT cores and so on.

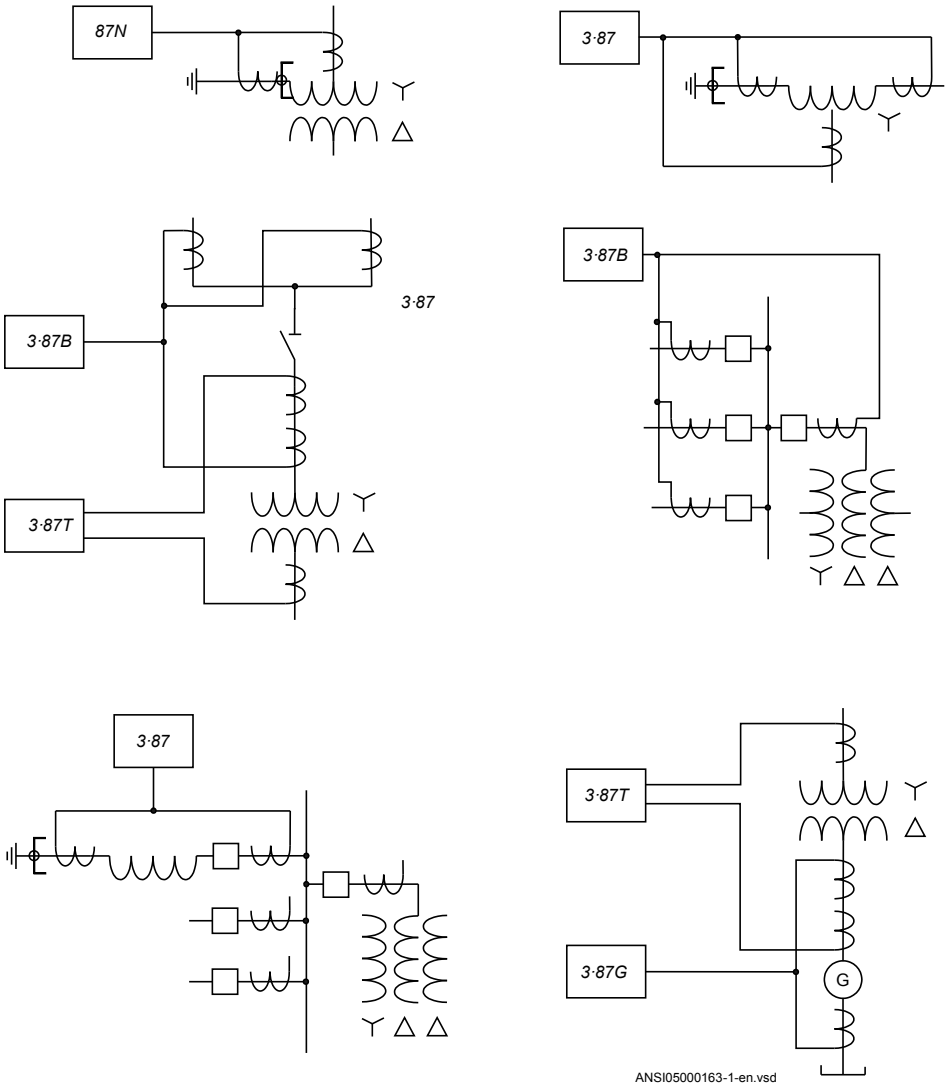

Figure 32: Different applications of a 1Ph High impedance differential protection HZPDIF (87) function

6.1.2.1 The basics of the high impedance principle

The high impedance differential protection principle has been used for many years and is well documented in literature publicly available. Its operating principle provides very good sensitivity and high speed operation. One main benefit offered by the principle is an absolute stability (that is, no operation) for external faults even in the presence of heavy CT saturation. The principle is based on the CT secondary current circulating between involved current transformers and not through the IED due to high impedance in the measuring branch. This stabilizing resistance is in the range of

hundreds of ohms and sometimes above one kilo Ohm. When an internal fault occurs the current cannot circulate and is forced through the measuring branch causing relay operation.

It should be remembered that the whole scheme, its built-in components and wiring must be adequately maintained throughout the lifetime of the equipment in order to be able to withstand the high voltage peaks (that is, pulses) which may appear during an internal fault. Otherwise any flash-over in CT secondary circuits or any other part of the scheme may prevent correct operation of the high impedance differential relay for an actual internal fault.

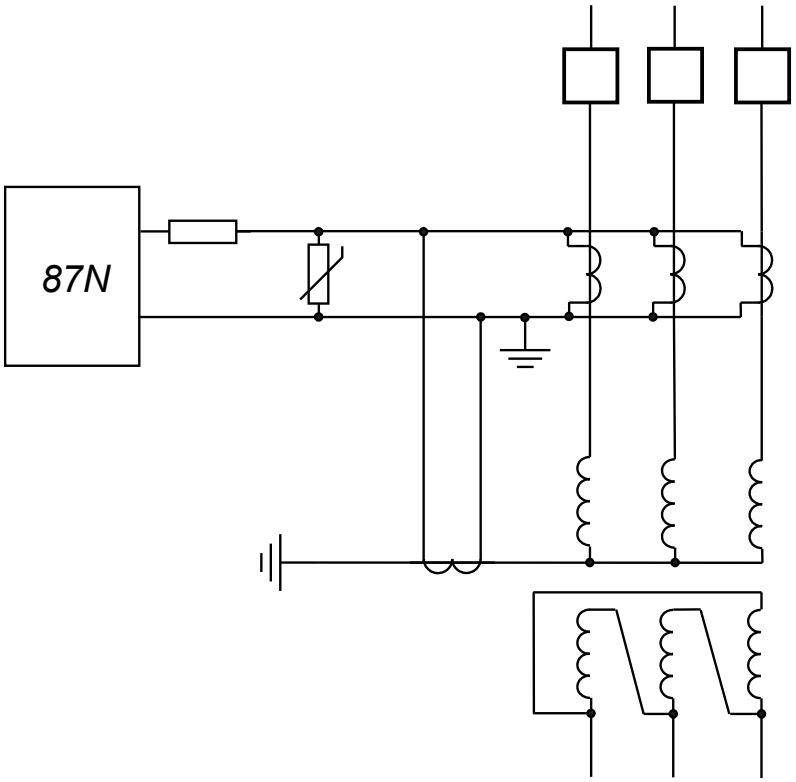

en05000164_ansi.vsd

Figure 33: Example for the high impedance restricted earth fault protection application

For a through fault one current transformer might saturate when the other CTs still will feed current. For such a case a voltage will be developed across the measuring branch. The calculations are made with the worst situations in mind and a minimum operating voltage V_R is calculated according to equation 14

$$VR > IF\max \cdot \left(Rct + Rl \right)$$

(Equation 14)

where:

*IF*max	is the maximum through fault current at the secondary side of the CT
Rct	is the current transformer secondary winding resistance and
Rl	is the maximum loop resistance of the circuit at any CT.

The minimum operating voltage has to be calculated (all loops) and the IED function is set higher than the highest achieved value (setting *TripPickup*). As the loop resistance is the value to the connection point from each CT, it is advisable to do all the CT core summations in the switchgear to have shortest possible loops. This will give lower setting values and also a better balanced scheme. The connection in to the control room can then be from the most central bay.

For an internal fault, all involved CTs will try to feed current through the measuring branch. Depending on the size of current transformer, relatively high voltages will be developed across the series resistor. Note that very high peak voltages can appear. To prevent the risk of flashover in the circuit, a voltage limiter must be included. The voltage limiter is a voltage dependent resistor (Metrosil).

The external unit with stabilizing resistor has a value of either 6800 ohms or 1800 ohms (depending on ordered alternative) with a sliding link to allow adjustment to the required value. Select a suitable value of the resistor based on the VR voltage calculated. A higher resistance value will give a higher sensitivity and a lower value a lower sensitivity of the relay.

The function has a recommended operating current range 40 mA to 1.0A for 1 A inputs and 200 mA to 5A for 5A inputs. This, together with the selected and set value, is used to calculate the required value of current at the set *TripPickup* and *R series* values.

The CT inputs used for 1Ph High impedance differential protection HZPDIF (87) function, shall be set to have ratio 1:1. So the parameters CT_{secx} and CT_{primx} of the relevant channel x of TRM and/or AIM shall be set equal to 1 A by PST in PCM600; The parameter *CTStarPointx* may be set to *ToObject*.

The tables 11, 12 below show, the operating currents for different settings of operating voltages and selected resistances. Adjust as required based on tables 11, 12 or to values in between as required for the application.

Minimum ohms can be difficult to adjust due to the small value compared to the total value.

Normally the voltage can be increased to higher values than the calculated minimum *TripPickup* with a minor change of total operating values as long as this is done by adjusting the resistor to a higher value. Check the sensitivity calculation below for reference.

Table 11: 1 A channels: input with minimum operating down to 20 mA

Operating voltage *TripPickup*	Stabilizing resistor R ohms	Operating current level 1 A	Stabilizing resistor R ohms	Operating current level 1 A	Stabilizing resistor R ohms	Operating current level 1 A
20 V	1000	0.020 A	--	--	--	--
40 V	2000	0.020 A	1000	0.040 A	--	--
60 V	3000	0.020 A	1500	0.040 A	600	0.100 A
80 V	4000	0.020 A	2000	0.040 A	800	0.100 A
100 V	5000	0.020 A	2500	0.040 A	1000	0.100 A
150 V	6000	0.020 A	3750	0.040 A	1500	0.100 A
200 V	6800	0.029 A	5000	0.040 A	2000	0.100 A

Table 12: 5 A channels: input with minimum operating down to 100 mA

Operating voltage *TripPickup*	Stabilizing resistor R1 ohms	Operating current level 5 A	Stabilizing resistor R1 ohms	Operating current level 5 A	Stabilizing resistor R1 ohms	Operating current level 5 A
20 V	200	0.100 A	100	0.200 A	--	--
40 V	400	0.100 A	200	0.200 A	100	0.400
60 V	600	0.100 A	300	0.200 A	150	0.400 A
80 V	800	0.100 A	400	0.200 A	200	0.400 A
100 V	1000	0.100 A	500	0.200 A	250	0.400 A
150 V	1500	0.100 A	750	0.200 A	375	0.400 A
200 V	2000	0.100 A	1000	0.200 A	500	0.400 A

The current transformer saturation voltage must be at least 2 ^{x} *TripPickup* to have sufficient operating margin. This must be checked after calculation of *TripPickup*.

When the R value has been selected and the *TripPickup* value has been set, the sensitivity of the scheme *IP* can be calculated. The IED sensitivity is decided by the total current in the circuit according to equation 15.

$$IP = n \cdot (IR + Ires + \sum lmag)$$

(Equation 15)

where:

n	is the CT ratio
IP	primary current at IED pickup,
IR	IED pickup current (U>Trip/SeriesResistor)
Ires	is the current through the voltage limiter and
ΣImag	is the sum of the magnetizing currents from all CTs in the circuit (for example, 4 for restricted earth fault protection, 2 for reactor differential protection, 3-5 for autotransformer differential protection).

It should be remembered that the vectorial sum of the currents must be used (IEDs, Metrosil and resistor currents are resistive). The current measurement is insensitive to DC component in fault current to allow the use of only the AC components of the fault current in the above calculations.

The voltage dependent resistor (Metrosil) characteristic is shown in Figure 40.

Series resistor thermal capacity

The series resistor is dimensioned for 200 W. Care shall be exercised while testing to ensure that if current needs to be injected continuously or for a significant duration of time, check that the heat dissipation Vxxx Series Resistance value does not exceed 200 W. Otherwise injection time shall be reduced to the minimum.

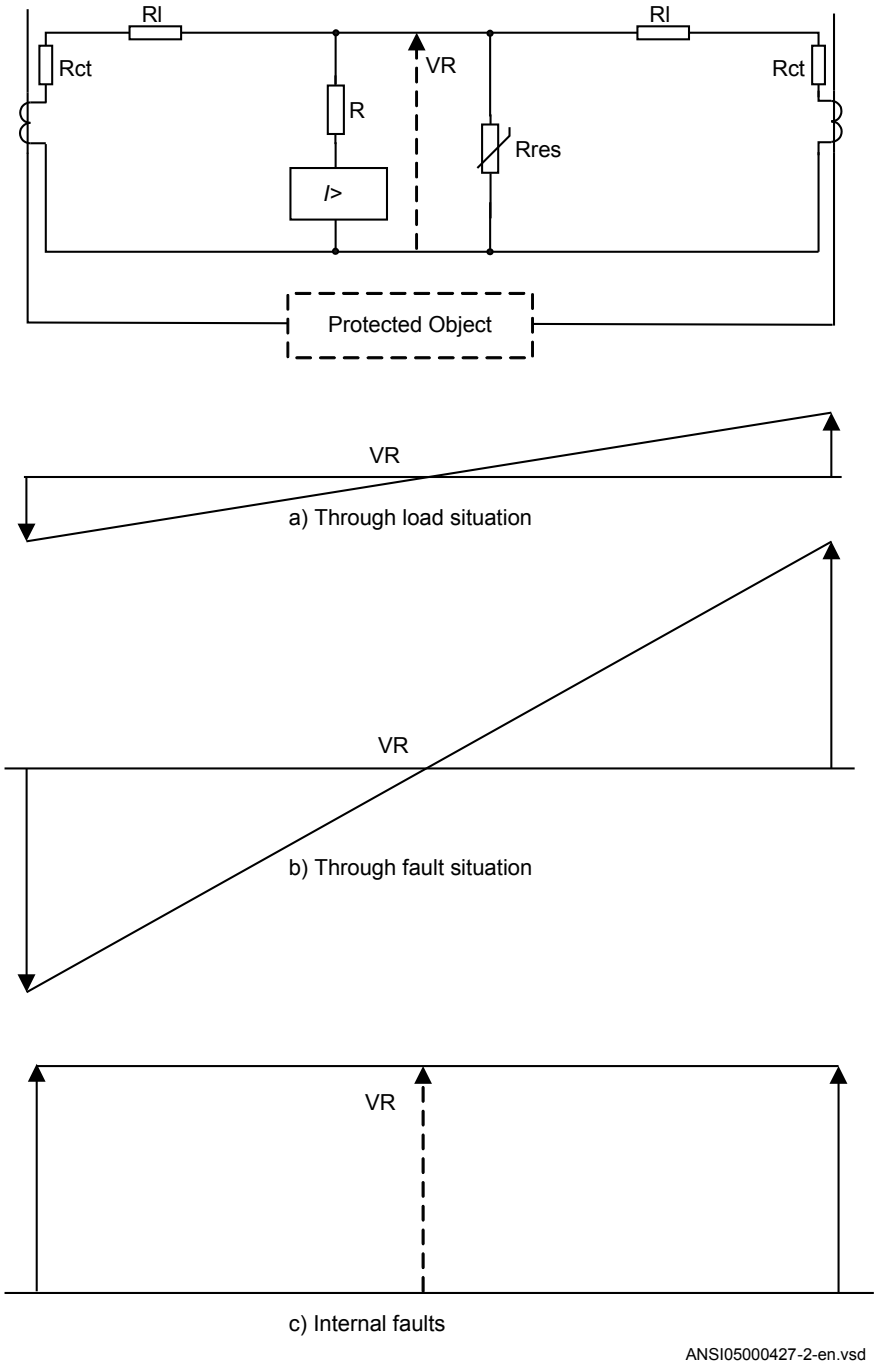

Figure 34: The high impedance principle for one phase with two current transformer inputs

6.1.3 Connection examples for high impedance differential protection

WARNING! USE EXTREME CAUTION! Dangerously high voltages might be present on this equipment, especially on the plate with resistors. De-energize the primary object protected with this equipment before connecting or disconnecting wiring or performing any maintenance. The plate with resistors should be provided with a protective cover, mounted in a separate box or in a locked cubicle. National law and standards shall be followed.

6.1.3.1 Connections for three-phase high impedance differential protection

Generator, reactor or busbar differential protection is a typical application for three-phase high impedance differential protection. Typical CT connections for three-phase high impedance differential protection scheme are shown in figure 35.

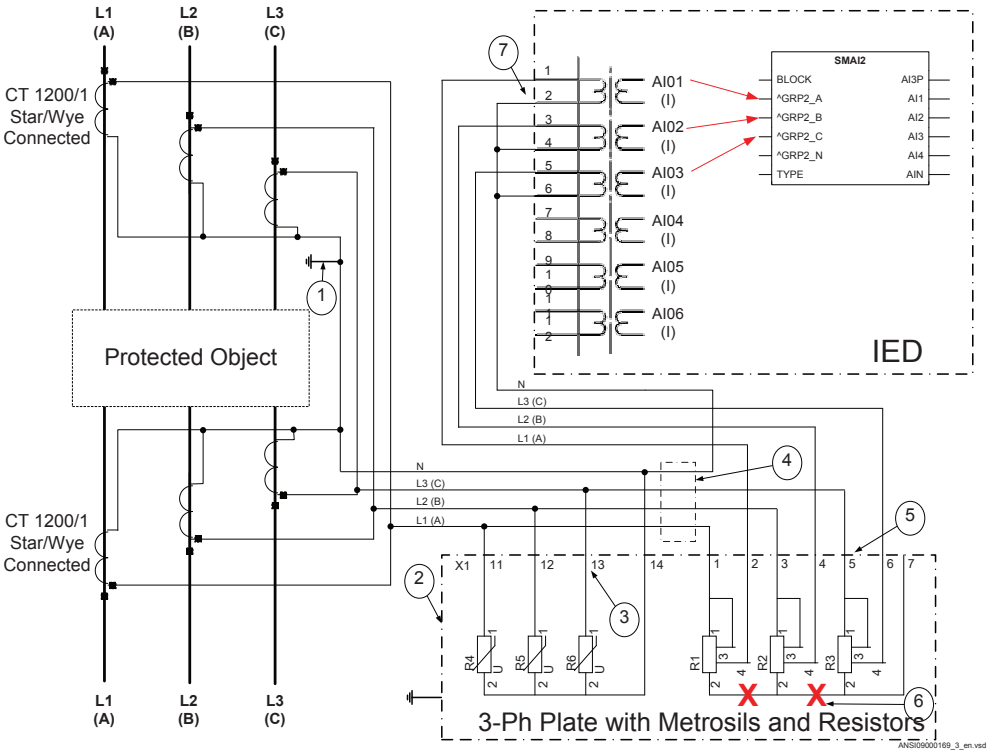

Figure 35: CT connections for high impedance differential protection

Pos	Description
1	Scheme grounding point

Note that it is of outmost importance to insure that only one grounding point exist in such scheme.

2	Three-phase plate with setting resistors and metrosils. Grounding (PE), protective ground is a separate 4 mm screw terminal on the plate.
3	Necessary connection for three-phase metrosil set.
4	Position of optional test switch for secondary injection into the high impedance differential IED.
5	Necessary connection for setting resistors.
6	The factory made star point on a three-phase setting resistor set.

Shall be removed for installations with 650 and 670 series IEDs. This star point is required for RADHA schemes only.

7	How to connect three individual phase currents for high impedance scheme to three CT inputs in the IED.

6.1.3.2 Connections for 1Ph High impedance differential protection HZPDIF (87)

Restricted earth fault protection REFPDIF (87N) is a typical application for 1Ph High impedance differential protection HZPDIF (87). Typical CT connections for high impedance based REFPDIF (87N) protection scheme are shown in figure 36.

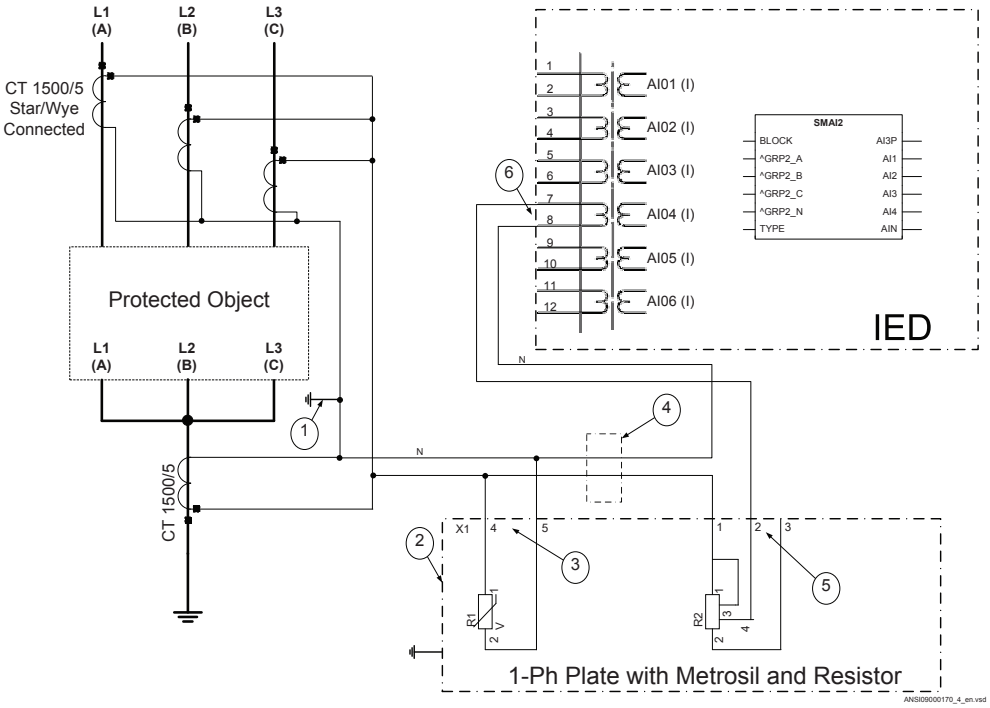

Figure 36: CT connections for restricted earth fault protection

Pos	Description
1	Scheme grounding point

Note that it is of outmost importance to insure that only one grounding point exist in such scheme.

2	One-phase plate with stabilizing resistor and metrosil. Grounding (PE), protective ground is a separate 4 mm screw terminal on the plate.
3	Necessary connection for the metrosil.
4	Position of optional test switch for secondary injection into the high impedance differential IED.
5	Necessary connection for stabilizing resistor.
6	How to connect REFPDIF (87N) high impedance scheme to one CT input in IED.

6.1.4 Setting guidelines

The setting calculations are individual for each application. Refer to the different application descriptions below.

6.1.4.1 Configuration

The configuration is done in the Application Configuration tool.

6.1.4.2 Settings of protection function

Operation: The operation of the high impedance differential function can be switched *Enabled* or *Disabled*.

AlarmPickup: Set the alarm level. The sensitivity can roughly be calculated as a certain percentage of the selected Trip level. A typical setting is 10% of *TripPickup.* This alarm stage can be used for scheme CT supervision.

tAlarm: Set the time delay for the alarm. A typical setting is 2-3 seconds.

TripPickup: Set the trip level according to the calculations (see examples below for a guidance). The level is selected with margin to the calculated required voltage to achieve stability. Values can be within 20V - 400V range dependent on the application.

R series: Set the value of the used stabilizing series resistor. Calculate the value according to the examples for each application. Adjust the resistor as close as possible to the calculated value. Measure the value achieved and set this value for this parameter.

The value shall always be high impedance. This means for example, for 1A circuits say bigger than 400 ohms (400 VA) and for 5 A circuits say bigger than 100 ohms (2500 VA). This ensures that the current will circulate and not go through the differential circuit at through faults.

That the settings of U>Alarm, U>Trip and SeriesResistor must be chosen such that both U>Alarm/SeriesResistor and U>Trip/SeriesResistor are >4% of IRated of the used current input. Normally the settings shall also be such that U>Alarm/SeriesResistor and U>Trip/SeriesResistor both gives a value <4*IRated of the used current input. If not, the limitation in how long time the actual current is allowed to persist not to overload the current input must be considered especially during the secondary testing.

6.1.4.3 T-feeder protection

In many busbar arrangements such as breaker-and-a-half, ring breaker, mesh corner, there will be a T-feeder from the current transformer at the breakers up to the current transformers in the feeder circuit (for example, in the transformer bushings). It is often

required to separate the protection zones that the feeder is protected with one scheme while the T-zone is protected with a separate differential protection scheme. The 1Ph high impedance differential HZPDIF (87) function in the IED allows this to be done efficiently, see Figure 37.

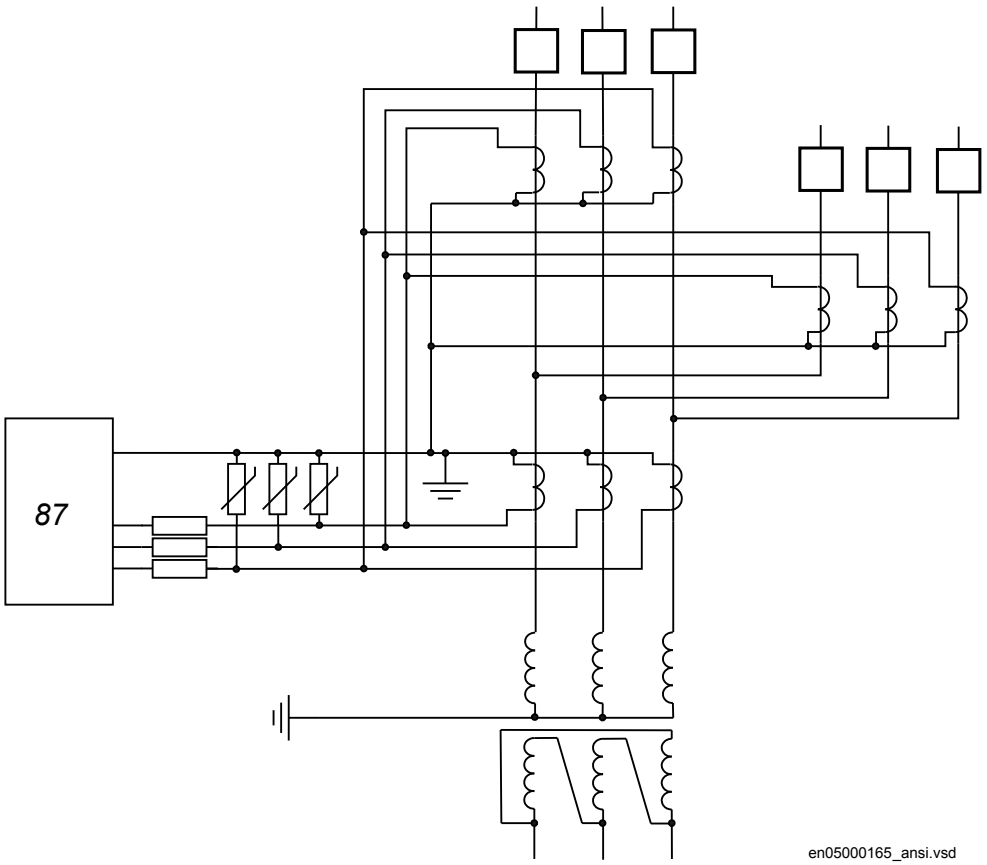

Figure 37: The protection scheme utilizing the high impedance function for the T-feeder

Normally this scheme is set to achieve a sensitivity of around 20 percent of the used CT primary rating so that a low ohmic value can be used for the series resistor.

It is strongly recommended to use the highest tap of the CT whenever high impedance protection is used. This helps in utilizing maximum CT capability, minimize the secondary fault current, thereby reducing the stability voltage limit. Another factor is that during internal faults, the voltage developed across the selected tap is limited by the non-linear resistor but in the unused taps, owing to auto-transformer action, voltages induced may be much higher than design limits.

Setting example

Basic data:	
Current transformer ratio:	2000/5A
CT Class:	C800 (At max tap of 2000/5A)
Secondary resistance:	0.5 Ohm (2000/5A tap)
Cable loop resistance:	2
Max fault current:	Equal to switchgear rated fault current 40 kA

Calculation:

$$VR > \frac{40000}{400} \cdot \left(0.5 + 0.4\right) = 90V$$

(Equation 16)

Select a setting of *TripPickup*=100 V.

The current transformer saturation voltage must be at least twice the set operating voltage *TripPickup*.

$$VkneeANSI > (0.5 + 8) \cdot 100 * 0.7 = 595V$$

(Equation 17)

that is, bigger than 2 x *TripPickup*

Check from the table of selected resistances the required series stabilizing resistor value to use. As this application requires to be so sensitive select *R Series*= 500 ohm, which gives an IED operating current of 200 mA.

Calculate the primary sensitivity at operating voltage using the following equation.

$$IP = \frac{2000}{5}\left(200\underline{|0°} + 3 \cdot 50\underline{|-60°}\right) \cdot 10^{-3} \leq approx.100A$$

(Equation 18)

where

100 mA	is the current drawn by the IED circuit and
10 mA	is the current drawn by each CT just at pickup
20 mA	is current drawn by metrosil at pickup

The magnetizing current is taken from the magnetizing curve for the current transformer cores which should be available. The current value at *TripPickup* is taken.

It can clearly be seen that the sensitivity is not so much influenced by the selected voltage level so a sufficient margin should be used. The selection of the stabilizing resistor and the level of the magnetizing current (mostly dependent of the number of turns) are the most important factors.

6.1.4.4 Tertiary reactor protection

Reactive power equipment (for example shunt reactors and/or shunt capacitors) can be connected to the tertiary winding of the power transformers. The 1Ph High impedance differential protection function HZPDIF (87) can be used to protect the tertiary reactor for phase faults as well as ground faults if the power system of the tertiary winding is direct or low impedance grounded.

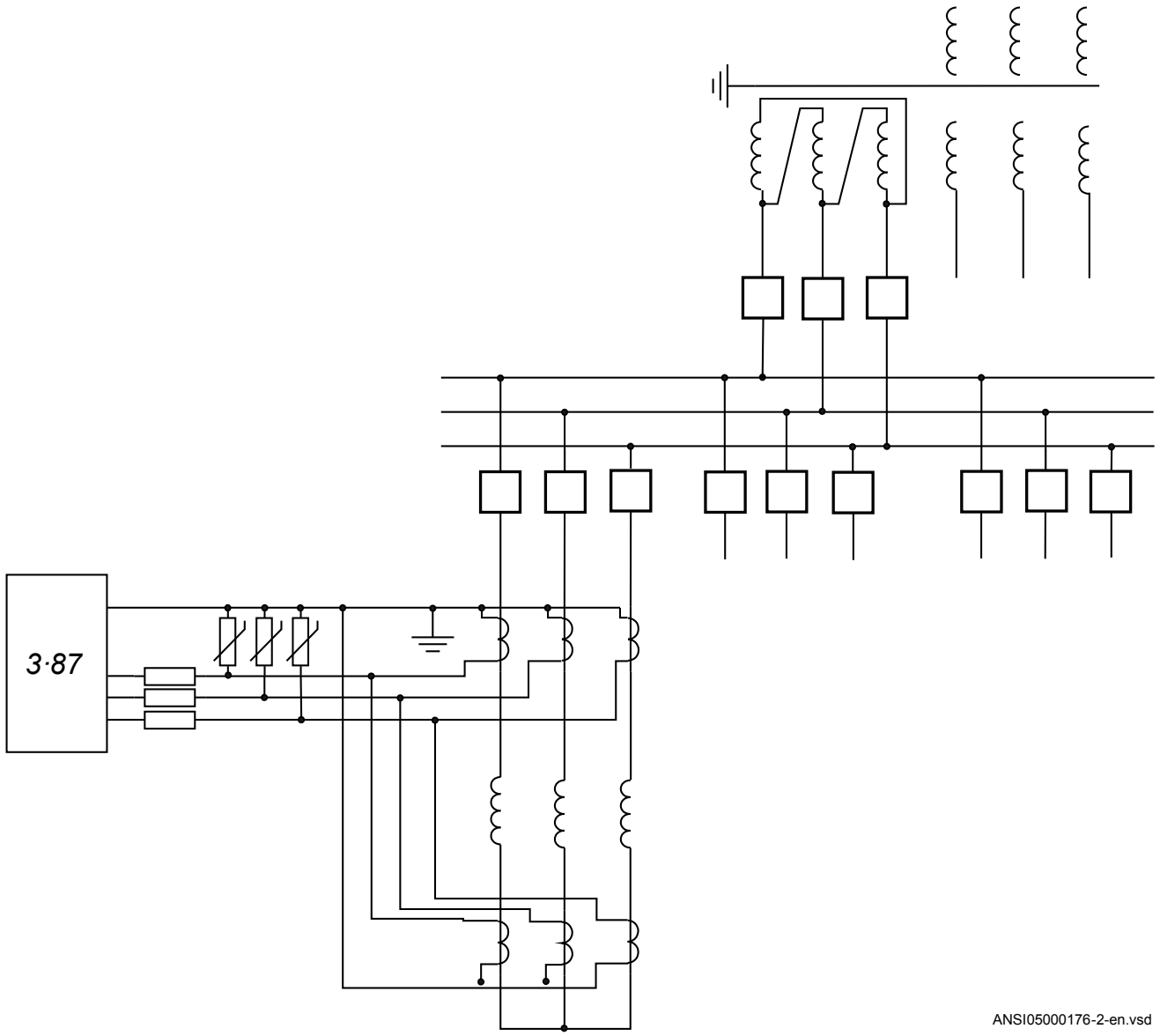

Figure 38: Application of the1Ph High impedance differential protection HZPDIF (87) function on a reactor

Setting example

It is strongly recommended to use the highest tap of the CT whenever high impedance protection is used. This helps in utilizing maximum CT capability, minimize the secondary fault, thereby reducing the stability voltage limit. Another factor is that during internal faults, the voltage developed across the selected tap is limited by the non-linear resistor

but in the unused taps, owing to auto-transformer action, voltages much higher than design limits might be induced.

Basic data:	
Current transformer ratio:	100/5 A (Note: Must be the same at all locations)
CT Class:	C200
Secondary resistance:	0.1 Ohms (At 100/5 Tap)
Cable loop resistance:	<100 ft AWG10 (one way between the junction point and the farthest CT) to be limited to approximately 0.1 Ohms at 75deg C Note! Only one way as the tertiary power system grounding is limiting the ground-fault current. If high ground-fault current exists use two way cable length.
Max fault current:	The maximum through fault current is limited by the reactor reactance and the inrush will be the worst for a reactor for example, 800 A.

Calculation:

$$VR > \frac{800}{20} \cdot (0.1 + 0.1) = 8$$

(Equation 19)

Select a setting of *TripPickup*=30 V.

The current transformer knee point voltage must be at least, twice the set operating voltage *TripPickup*.

$$VkneeANSI > \left(2 + 0.1\right) \cdot 100 \cdot 0.7 = 147 \text{ V}$$

(Equation 20)

that is, greater than 2 × *TripPickup*.

Check from the table of selected resistances the required series stabilizing resistor value to use. Since this application requires good sensitivity, select *R Series* = 100 ohm, which gives an IED current of 200 mA.

To calculate the sensitivity at operating voltage, refer to equation 21, which gives an acceptable value, ignoring the current drawn by the non-linear resistor. A little lower sensitivity could be selected by using a lower resistance value.

$$IP = \frac{100}{5} \cdot (200 + 2 \cdot 30) \leq approx.5.2A$$

(Equation 21)

Where 200mA is the current drawn by the IED circuit and 50mA is the current drawn by each CT just at pickup. The magnetizing current is taken from the magnetizing curve of the current transformer cores, which should be available. The current value at *TripPickup* is taken.

6.1.4.5 Restricted earth fault protection (87N)

For solidly grounded systems a restricted earth fault protection REFPDIF (87N) is often provided as a complement to the normal transformer differential function. The advantage with the restricted ground fault functions is the high sensitivity for internal earth faults in the transformer winding. Sensitivities of 2-8% can be achieved whereas the normal differential function will have sensitivities of 20-40%. The sensitivity for high impedance restricted ground fault function is mostly dependent on the current transformers magnetizing currents.

The connection of a restricted earth fault function is shown in Figure 39. It is connected across each directly or low impedance grounded transformer winding.

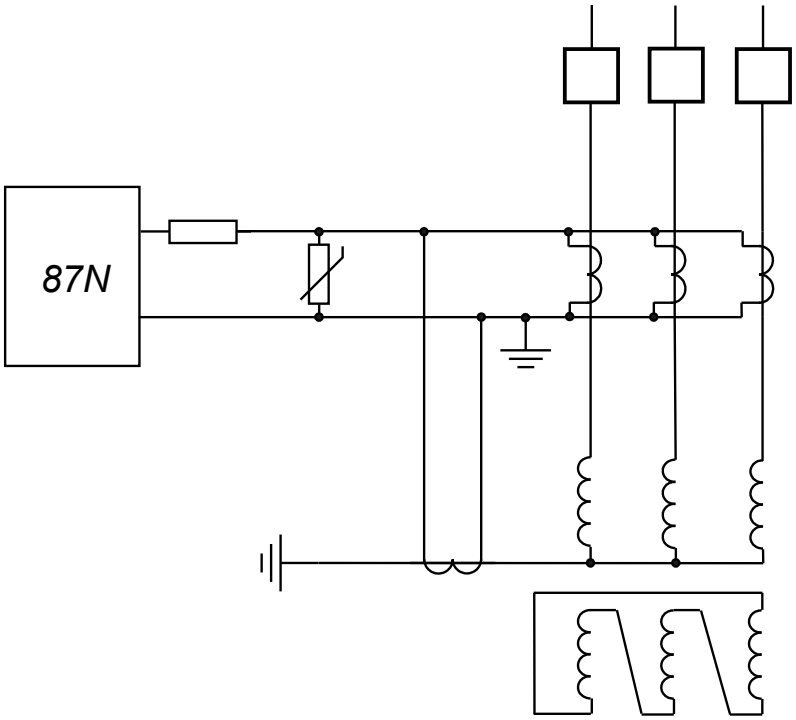

en05000177_ansi.vsd

Figure 39: Application of HZPDIF (87) function as a restricted earth fault protection for a star connected winding of an YNd transformer

Setting example

It is strongly recommended to use the highest tap of the CT whenever high impedance protection is used. This helps in utilizing maximum CT capability, minimize the current, thereby reducing the stability voltage limit. Another factor is that during internal faults, the voltage developed across the selected tap is limited by the non-linear resistor but in the unused taps, owing to auto-transformer action, voltages much higher than design limits might be induced.

Basic data:	
Transformer rated current on HV winding:	250 A
Current transformer ratio:	600-300/5A A (Note: Must be the same at all locations)
CT Class:	C200
Secondary resistance:	0.66 ohms
Cable loop resistance:	<50 ft AWG10 (one way between the junction point and the farthest CT) to be limited to approx. 0.05 Ohms at 75° C gives loop resistance 2 x 0.05 = 0.1 Ohms
Max fault current:	The maximum through fault current is limited by the transformer reactance, use 15 x rated current of the transformer

Calculation:

$$VR > 15 \cdot \frac{250}{600/5} \cdot (0.1 + 0.1) = 6.25V$$

(Equation 22)

Select a setting of *TripPickup*=40 V.

The current transformerknee point voltage can roughly be calculated from the rated values. Considering knee point voltage to be about 70% of the accuracy limit voltage.

$$VkneeANSI > (0.1 + 2) \cdot 100 = 210V$$

(Equation 23)

that is, greater than 2 x *TripPickup*

Check from the table of selected resistances the required series stabilizing resistor value to use. Since this application requires high sensitivity, select *R series*= 100 ohm which gives a current of 200 mA.

To calculate the sensitivity at operating voltage, refer to equation 24 which is acceptable as it gives around 10% minimum operating current, ignoring the current drawn by the non-linear resistor.

$$IP = \frac{600}{5} \cdot \left(200\underline{|0°} + 4 \cdot 20\underline{|-60°}\right) \leq approx.5.4A$$

(Equation 24)

Where 200mA is the current drawn by the IED circuit and 50mA is the current drawn by each CT just at pickup. The magnetizing current is taken from the magnetizing curve for the current transformer cores which should be available. The current value at *TripPickup* is taken.

6.1.4.6 Alarm level operation

The 1Ph High impedance differential protection HZPDIF (87) function has a separate alarm level, which can be used to give alarm for problems with an involved current transformer circuit. The setting level is normally selected to be around 10% of the operating voltage *TripPickup*.

As seen in the setting examples above the sensitivity of HZPDIF (87) function is normally high, which means that the function will in many cases operate also for short circuits or open current transformer secondary circuits. However the stabilizing resistor can be selected to achieve sensitivity higher than normal load current and/or separate criteria can be added to the operation, like a check zone. This can be either another IED, with the same HZPDIF (87) function, or be a check about the fault condition, which is performed by a ground overcurrent function or neutral point voltage function.

For such cases where operation is not expected during normal service the alarm output should be used to activate an external shorting of the differential circuit avoiding continuous high voltage in the circuit. A time delay of a few seconds is used before the shorting and alarm are activated. Auxiliary relays with contacts that can withstand high voltage shall be used, like RXMVB types.

The metrosil operating characteristic is given in the following figure.

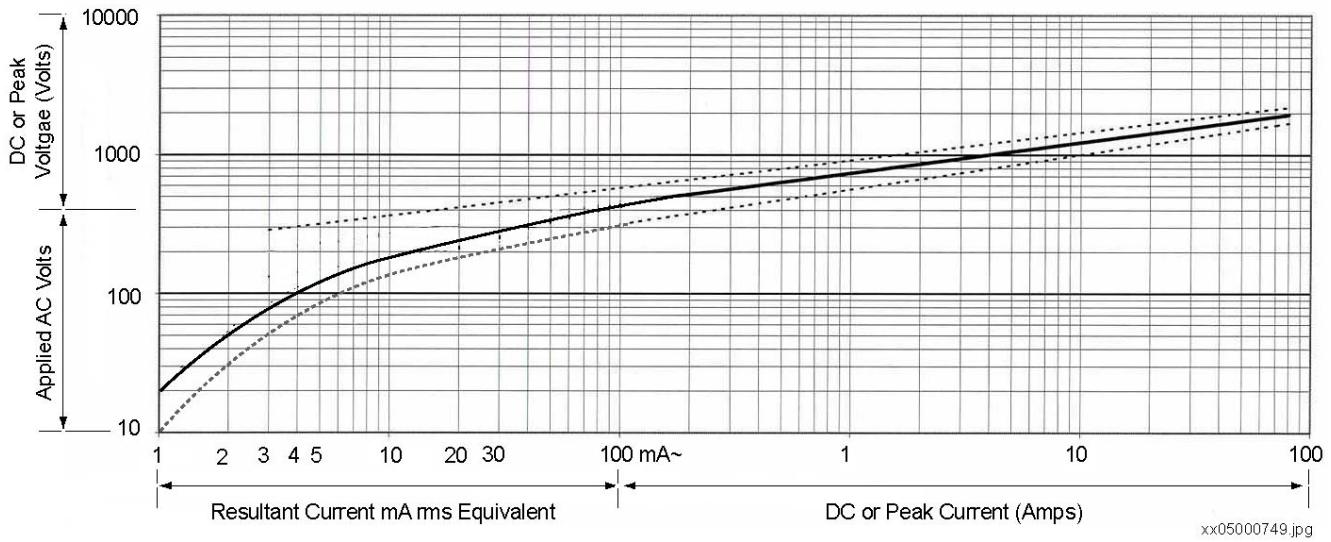

Figure 40: Current voltage characteristics for the non-linear resistors, in the range 10-200 V, the average range of current is: 0.01–10 mA

6.2 Low impedance restricted earth fault protection REFPDIF (87N)

6.2.1 Identification

Function description	IEC 61850 identification	IEC 60617 identification	ANSI/IEEE C37.2 device number
Restricted earth-fault protection, low impedance	REFPDIF	*IdN/I*	87N

6.2.2 Application

A breakdown of the insulation between a transformer winding and the core or the tank may result in a large fault current which causes severe damage to the windings and the transformer core. A high gas pressure may develop, damaging the transformer tank.

Fast and sensitive detection of ground faults in a power transformer winding can be obtained in solidly grounded or low impedance grounded networks by the restricted earth-fault protection. The only requirement is that the power transformer winding is connected to ground in the star point (in case of wye-connected windings) or through a separate grounding transformer (in case of delta-connected windings).

The low impedance restricted ground fault protection REFPDIF (87N) is a winding protection function. It protects the power transformer winding against faults involving ground. Observe that single phase-to-ground faults are the most common fault types in transformers. A sensitive ground fault protection is therefore desirable.

A restricted ground fault protection is the fastest and the most sensitive protection, a power transformer winding can have and will detect faults such as:

- ground faults in the transformer winding when the network is grounded through an impedance
- ground faults in the transformer winding in solidly grounded network when the point of the fault is close to the winding star point.

The restricted ground fault protection is not affected, as a differential protection, with the following power transformer related phenomena:

- magnetizing inrush currents
- overexcitation magnetizing currents
- load tap changer
- external and internal phase faults which do not involve ground
- symmetrical overload conditions

Due to its features, REFPDIF (87N) is often used as a main protection of the transformer winding for all faults involving ground.

6.2.2.1 Transformer winding, solidly grounded

The most common application is on a solidly grounded transformer winding. The connection is shown in figure 41.

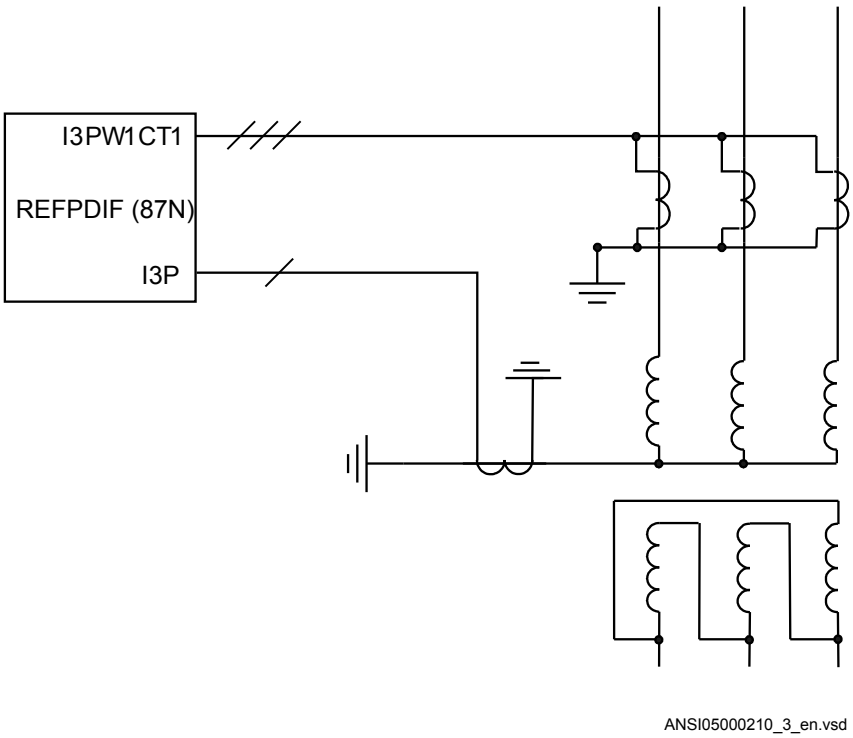

Figure 41: Connection of the low impedance Restricted earth-fault function REFPDIF (87N) for a directly (solidly) grounded transformer winding

6.2.2.2 Transformer winding, grounded through Zig-Zag grounding transformer

A common application is for low reactance grounded transformer where the grounding is through separate Zig-Zag grounding transformers. The fault current is then limited to typical 800 to 2000 A for each transformer. The connection for this application is shown in figure 42.

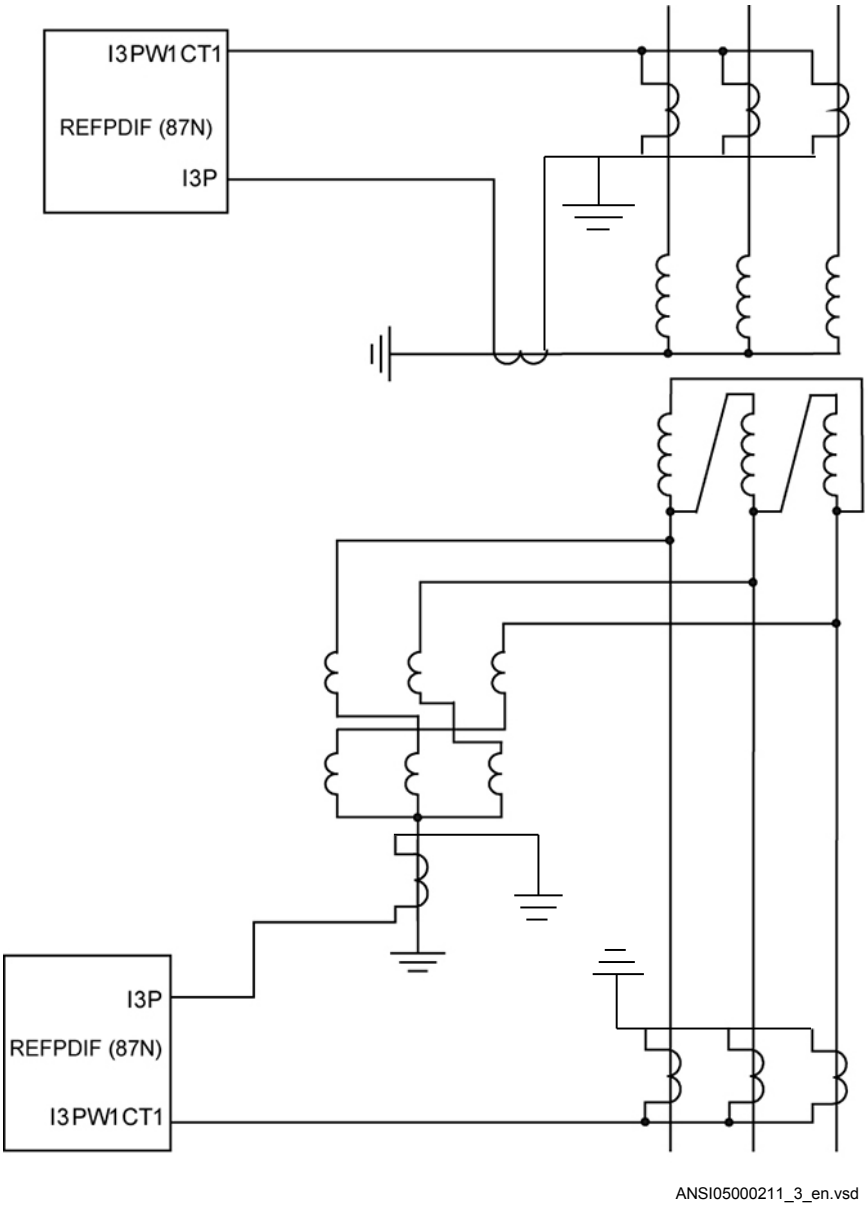

Figure 42: Connection of the low impedance Restricted earth-fault function REFPDIF for a zig-zag grounding transformer

6.2.2.3 Autotransformer winding, solidly grounded

Autotransformers can be protected with the low impedance restricted ground fault protection function REFPDIF. The complete transformer will then be protected

including the HV side, the neutral connection and the LV side. The connection of REFPDIF (87N) for this application is shown in figure 43.

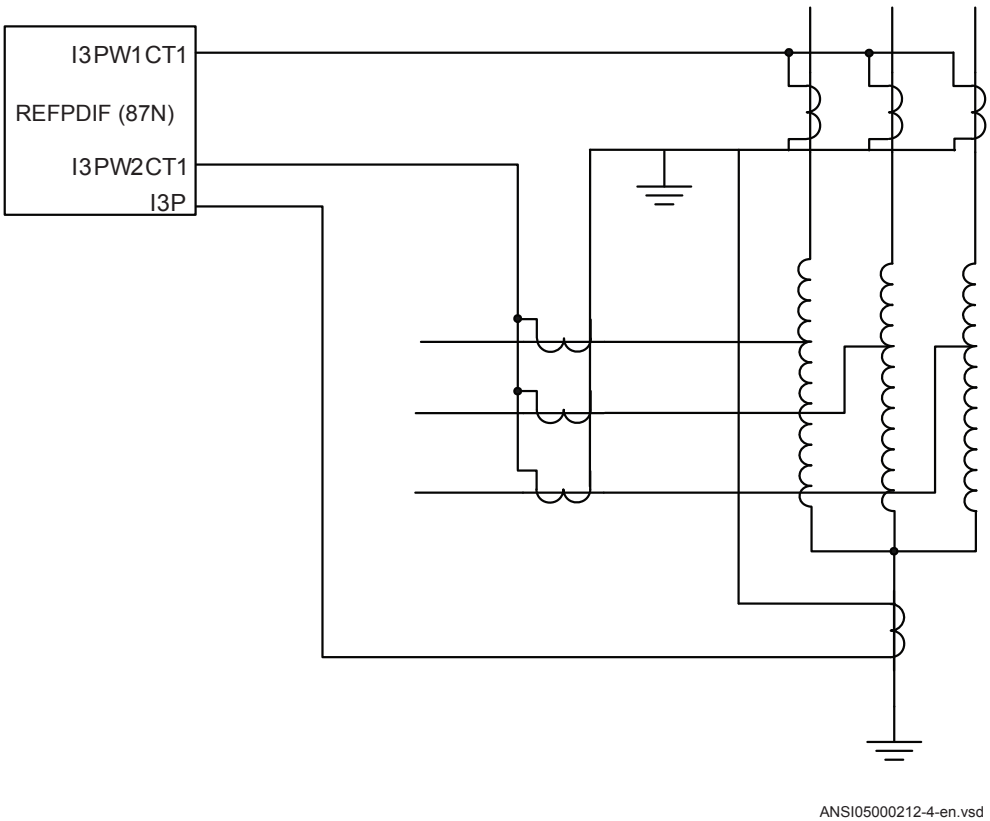

Figure 43: Connection of restricted ground fault, low impedance function REFPDIF (87N) for an autotransformer, solidly grounded

6.2.2.4 Reactor winding, solidly grounded

Reactors can be protected with restricted ground fault protection, low impedance function REFPDIF (87N). The connection of REFPDIF (87N) for this application is shown in figure 44.

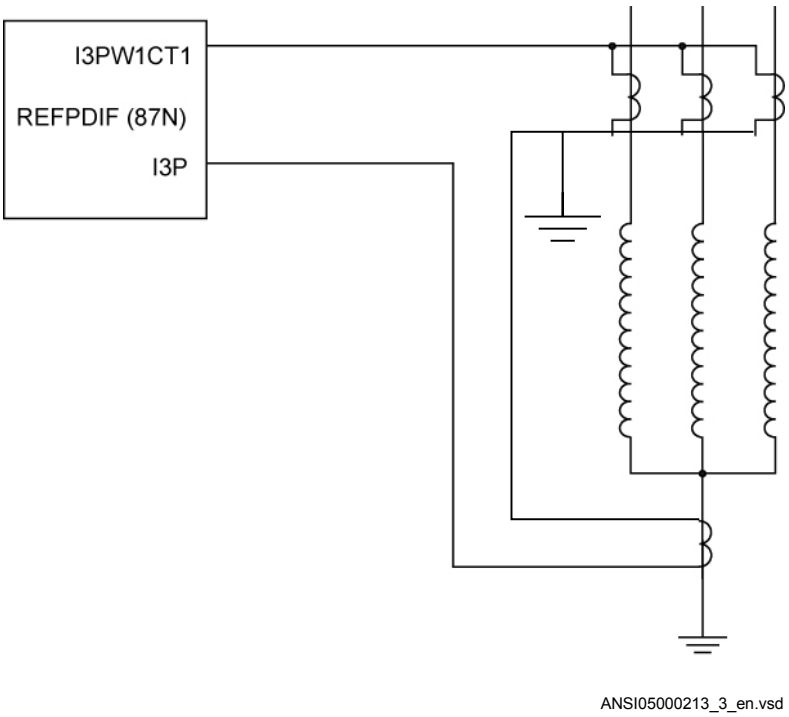

Figure 44: Connection of restricted earth-fault, low impedance function REFPDIF (87N) for a solidly grounded reactor

6.2.2.5 Multi-breaker applications

Multi-breaker arrangements including ring, one breaker-and-a-half, double breaker and mesh corner arrangements have two sets of current transformers on the phase side. The restricted earth-fault protection, low impedance function REFPDIF (87N) has inputs to allow two current inputs from each side of the transformer. The second winding set is only applicable for autotransformers.

A typical connection for a star-delta transformer is shown in figure 45.

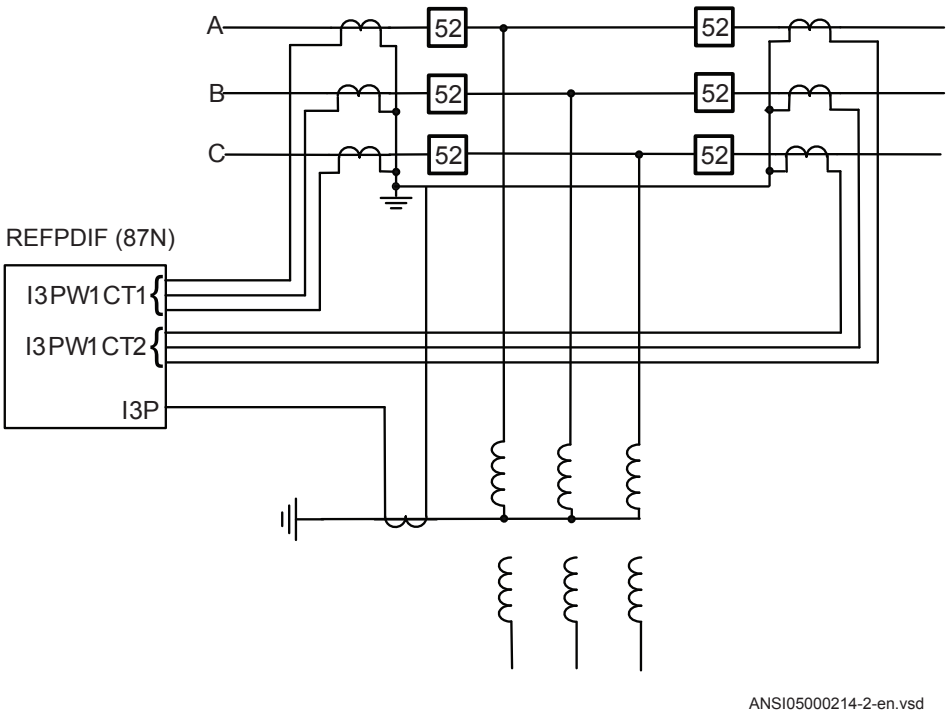

Figure 45: Connection of Restricted earth fault, low impedance function REFPDIF (87N) in multi-breaker arrangements

6.2.2.6 CT grounding direction

To make the restricted earth-fault protection REFPDIF (87N)operate correctly, the main CTs are always supposed to be wye-connected. The main CT's neutral (star) formation can be positioned in either way, *ToObject* or *FromObject*. However, internally REFPDIF (87N) always uses reference directions towards the protected transformers, as shown in Figure 45. Thus the IED always measures the primary currents on all sides and in the neutral of the power transformer with the same reference direction towards the power transformer windings.

The grounding can be freely selected for each of the involved current transformers.

6.2.3 Setting guidelines

6.2.3.1 Setting and configuration

Recommendation for analog inputs

I3P: Neutral point current (All analog inputs connected as 3Ph groups in ACT).

I3PW1CT1: Phase currents for winding 1 first current transformer set.

I3PW1CT2: Phase currents for winding1 second current transformer set for multi-breaker arrangements. When not required configure input to "GRP-OFF".

I3PW2CT1: Phase currents for winding 2 first current transformer set. Used for autotransformers.

I3PW2CT2: Phase currents for winding 2 second current transformer set for multi-breaker arrangements. Used when protecting an autotransformer. When not required, configure input to "GRP-OFF".

Recommendation for Binary input signals

Refer to the pre-configured configurations for details.

BLOCK: The input will block the operation of the function. Can be used, for example, to block for a limited time the operation during special service conditions.

Recommendation for output signals

Refer to pre-configured configurations for details.

PICKUP: The pickup output indicates that *Idiff* is in the operate region of the characteristic.

TRIP: The trip output is activated when all operating criteria are fulfilled.

DIR_INT: The output is activated when the directional criteria has been fulfilled.

BLK2H: The output is activated when the function is blocked due to a too high level of second harmonic.

6.2.3.2 Settings

The parameters for the restricted earth-fault protection, low impedance function REFPDIF (87N) are set via the local HMI or PCM600.

Common base IED values for primary current (*IBase*), primary voltage (*VBase*) and primary power (*SBase*) are set in a Global base values for settings function GBASVAL.

GlobalBaseSel: It is used to select a GBASVAL function for reference of base values.

Operation: The operation of REFPDIF (87N) can be switched *Enabled*/*Disabled*.

IdMin: The setting gives the minimum operation value. The setting is in percent of the *IBase* value of the chosen *GlobalBaseSel*. The neutral current must always be larger than half of this value. A normal setting is 30% of power transformer-winding rated current for a solidly grounded winding.

CTFactorPri1: A factor to allow a sensitive function also at multi-breaker arrangement where the rating in the bay is much higher than the rated current of the transformer winding. The stabilizing can then be high so an unnecessary high fault level can be required. The setting is normally 1.0 but in multi-breaker arrangement the setting shall be CT primary rating/*IBase*.

CTFactorPri2: A factor to allow a sensitive function also at multi-breaker arrangement where the rating in the bay is much higher than the rated current of the transformer winding. The stabilizing can then be high so an unnecessary high fault level can be required. The setting is normally 1.0 but in multi-breaker arrangement the setting shall be CT primary rating/*IBase*.

CTFactorSec1: See setting *CTFactorPri1*. Only difference is that *CTFactorSec1* is related to W2 side.

CTFactorSec2: See setting *CTFactorPri2*. Only difference is that *CTFactorSec2* is related to W2 side.

6.3 Line differential protection

6.3.1 Identification

Function description	IEC 61850 identification	IEC 60617 identification	ANSI/IEEE C37.2 device number
Line differential protection, 3 CT sets, 2-3 line ends	L3CPDIF	3Id/I>	87L
Line differential protection, 6 CT sets, 3-5 line ends	L6CPDIF	3Id/I>	87L
Line differential protection 3 CT sets, with in-zone transformers, 2-3 line ends	LT3CPDIF	3Id/I>	87LT
Line differential protection 6 CT sets, with in-zone transformers, 3-5 line ends	LT6CPDIF	3Id/I>	87LT
Line differential logic	LDLPSCH	-	87L

6.3.2 Application

Line differential protection can be applied on overhead lines and cables. It is an absolute selective unit protection with a number of advantages. Coordination with other protections is normally simple. All faults on the line, between the line bay CTs, can be cleared instantaneously. The sensitivity can be made high, which is especially important for the ability to detect high resistive ground faults. It is not influenced by possible voltage and/or current inversion, associated with faults in series compensated networks. It is not influenced by fault current reversal at ground faults on parallel lines. As it is phase-segregated, the identification of faulted phases is inherent, and thus the application of single- or two-pole trip and auto-reclosing can be made robust and reliable. Note that if an in-line or shunt power transformer is included in the protected

circuit, of the type Dy or Yd, then the protection cannot be phase-segregated. Single-phase automatic re-closing will not be possible.

Line differential protection can be applied on multi-terminal lines with maximum five line ends. Depending on the actual network, reliable fault clearance can often be difficult to achieve with conventional distance protection schemes in these types of applications.

It is recommended to use the same firmware version as well as hardware version for a specific RED670 scheme.

With 1½ breaker configurations, normally the line protection is fed from two CTs. Avoiding to add the currents from the two CTs externally before entering the IED is important as this will enable possible bias current from both CTs to be considered in the current differential algorithm, and in that way assuring that the correct restrain will be possible, as shown in figure 46.

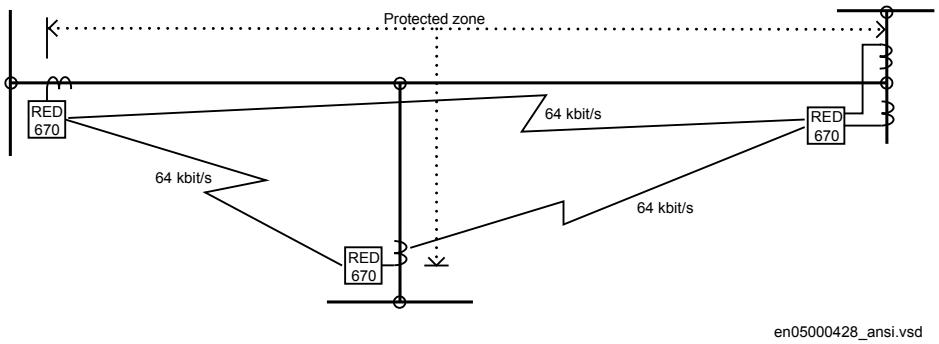

Figure 46: Line protection with breaker-and-a-half configurations, fed from two CTs

6.3.2.1 Power transformers in the protected zone

Line differential protection can also be applied with in-line power transformers in the protected zone. Such an in-line power transformer can be situated in tap, as shown in Figure 47 or in one end of a two-terminal line. Observe that the currents of the in-line power transformer are measured by RED670 on the low voltage side. Up to two two-winding transformers, or alternatively one three-winding transformer can be included.

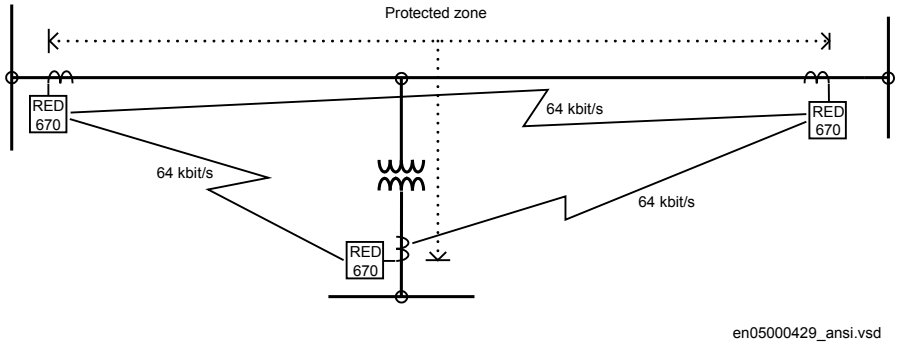

Figure 47: Transformer situated in tap

A current differential protection including power transformers must be compensated for transformer turns ratio and phase shift/vector group. In RED670 this compensation is made in the software algorithm, which eliminates the need for auxiliary interposing current transformers. Necessary parameters, such as transformer rated voltages and phase shift, must be entered via the Parameter Setting tool or the LHMI.

Another concern with differential protection on power transformers is that a differential protection may operate unwanted due to external ground faults in cases where the zero-sequence current can flow only on one side of the power transformer but not on the other side, as in the case of Yd or Dy phase shift/vector groups. This is the situation when the zero-sequence current cannot be transformed from one side to the other side of the transformer. To make the differential protection insensitive to external ground faults in these situations, the zero-sequence current must be eliminated from the terminal currents so that it does not appear as a differential current. This was previously achieved by means of intermediate current transformers. The elimination of zero-sequence current is done numerically and no auxiliary transformers are necessary. Instead it is necessary to eliminate the zero-sequence current by proper setting of the parameter *ZerSeqCurSubtr*.

6.3.2.2 Small power transformers in a tap

If there is a line tap with a comparatively small power transformer (say 1-20MVA) , line differential protection can be applied without the need of current measurement from the tap. It works such that line differential protection function will be time delayed for small differential currents below a set limit, making coordination with downstream short circuit protection in the tap possible. For differential currents above that limit, the operation will be instantaneous in the normal way. Under the condition that the load current in the tap will be negligible, normal line faults, with a fault current higher than the fault current on the LV side of the transformer, will be cleared instantaneously.

For faults on the LV side of the transformer the function will be time delayed, with the delay characteristic selected, thus providing selectivity to the downstream functions, see figure 48. The scheme will solve the problem with back-up protection for faults on the transformer LV side where many expensive solutions have been applied such as intertripping or a local HV breaker. In many such applications the back-up protection has been lacking due to the complexity in cost implications to arrange it. Refer also to the setting example below.

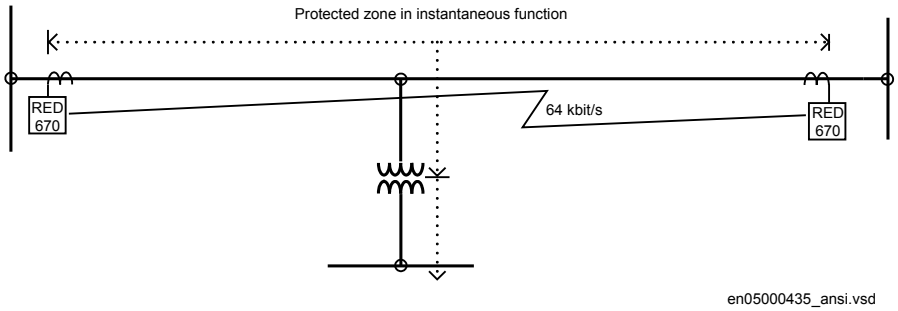

Figure 48: Line tap with a small power transformer, the currents of which are not measured, and consequently contribute to a (false) differential current

6.3.2.3 Charging current compensation

There are capacitances between the line phase conductors and between phase conductors and ground. These capacitances give rise to line charging currents which are seen by the differential protection as “false” differential currents, as shown in figure 49.

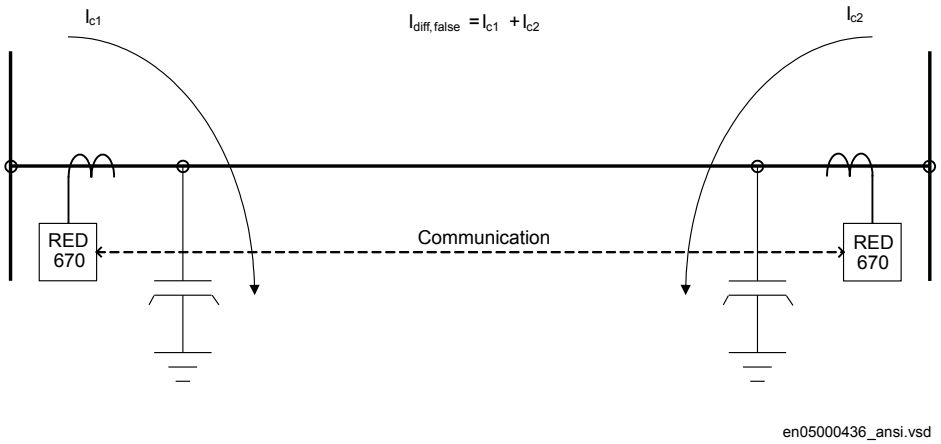

Figure 49: Charging currents

The magnitude of the charging current is dependent of the line capacitance and the system voltage. For underground cables and long overhead lines, the magnitude can be such that it affects the possibility to achieve the wanted sensitivity of the differential protection. To overcome this, a charging current compensation is available in line differential protection. When enabled, this algorithm will measure the fundamental frequency differential current under steady state undisturbed conditions and then subtract it, making the resulting differential current zero (or close to zero). Note that all small pre-fault differential currents are subtracted, no matter what their origin. This action is made separately for each phase.

When a disturbance occurs, values of the pre-fault differential currents are not updated, and the updating process is only resumed 100 ms after normal conditions have been restored. Normal conditions are then considered when there are no pickup signals, neither internal nor external fault is detected, the power system is symmetrical and so on. If an Open CT condition is detected, the compensation of charging currents is stopped immediately and the charging currents are temporarily memorized by the function. When Open CT signal resets, the process of compensation is resumed with the same charging current as before. The consequence of freezing the pre-fault values during fault conditions in this way will actually introduce a small error in the resulting calculated differential current under fault conditions. However, this will not have any practical negative consequences, while the positive effect of maintaining high sensitivity even with high charging currents will be achieved. To demonstrate this, two cases can be studied, one with a low resistive short circuit, and one with a high resistive short circuit.

The charging current is generated because there is a voltage applied over the line capacitance as seen in figure 49. If an external short circuit with negligible fault resistance occurs close to the line, the voltage in the fault location will be approximately zero. Consequently, zero voltage will also be applied over part of the line capacitance, which in turn will decrease the charging current compared to the pre-fault value. As mentioned above, the value of the pre-fault “false” differential current will be frozen when a fault is detected, and, as a consequence, the value of the subtracted charging current will be too high in this case. However, as it is a low resistive fault, the bias current will be comparatively high, while the charging current and any errors in the approximation of this will be comparatively low. Thus, the overestimated charging current will not jeopardize stability as can be seen from figure 50, showing the characteristic of line differential protection. In this figure, the considered fault will appear in the section well in the restrain area.

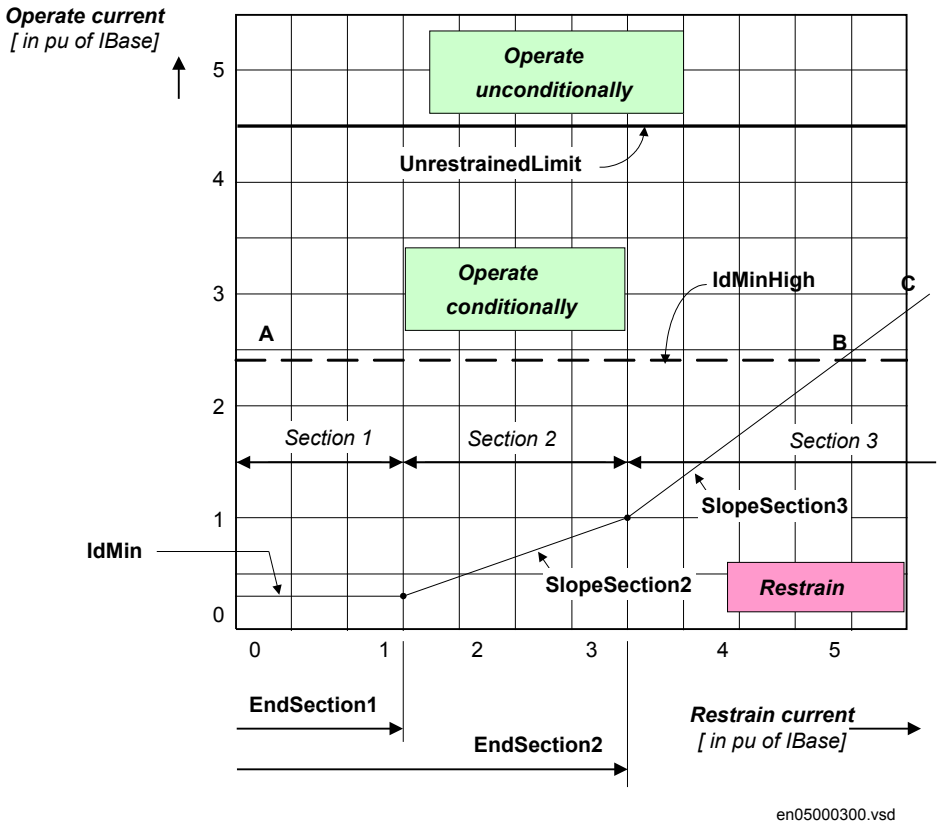

Figure 50: Overestimated charging current

If a high resistive fault is considered, the voltage reduction in the fault location will not be much reduced. Consequently, the value of the pre-fault “false” differential current will be a good estimation of the actual charging current.

Subtracting the pre-fault charging current from the differential current under fault conditions will make it possible to set *Idmin* mainly without considering the charging current in order to achieve maximum sensitivity. The stability at external faults will not be affected.

6.3.2.4 Time synchronization

Time synchronization of sampled current values is a crucial matter in numerical line differential protections. The synchronization is made with the so called echo method, which can be complemented with GPS synchronization. In applications with symmetrical communication delay, that is, send and receive times are equal, the echo method is sufficient. When used in networks with asymmetrical transmission times, the optional GPS synchronization is required.

6.3.2.5 Analog signal communication for line differential protection

Line differential protection uses digital 64 kbit/s communication channels to exchange telegrams between the protection IEDs. These telegrams contain current sample values, time information, trip signals, block signals, alarm signals and eight binary signals, which can be used for any purpose. Each IED can have a maximum of four communication channels.

On a two terminal line there is a need of one 64 kbit/s communication channel provided that there is only one CT in each line end, as shown in Figure 51.

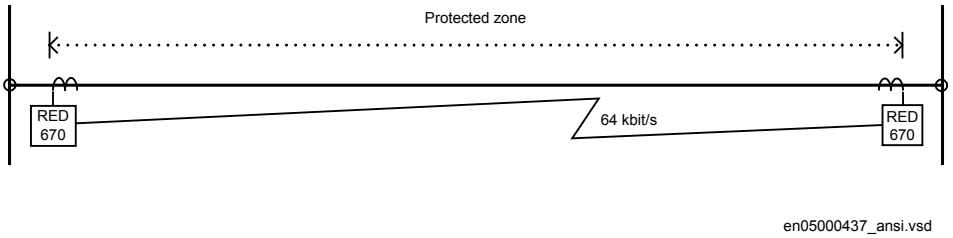

Figure 51: Two-terminal line

In case of breaker-and-a-half arrangements or ring buses, a line end has two CTs, as shown in Figure 52.

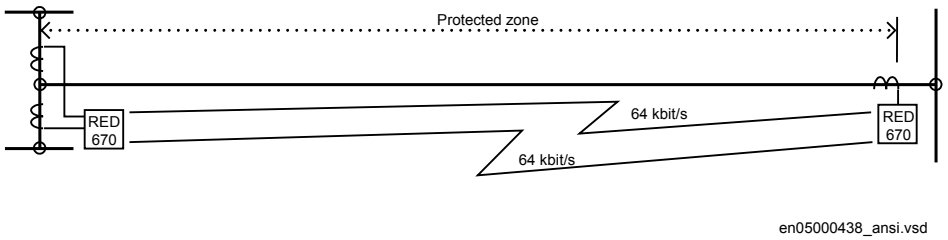

Figure 52: Two-terminal line with breaker-and-a-half

Observe that in Figure 52, each of the two local CTs on the left side is treated as a separate end by the differential protection.

In this case, current values from two CTs in the double breakers, ring main or breaker-and-a-half systems end with dual breaker arrangement need to be sent to the remote end. As a 64 kbit/s channel only has capacity for one three-phase current (duplex), this implies that two communication channels are needed in both ends, and this is also the normal solution. Alternatively, but not recommended, it is possible to add together the two local currents before sending them and in that way reduce the number of communication channels needed. This is then done in software in the IED, but by doing it this way there is reduced information about bias currents. The bias current is

considered the greatest phase current in any line end and it is common for all three phases. When sending full information from both local CTs to the remote end, this principle works, but when the two local currents are added together before sending the single resulting current on the single communication channel, information about the real phase currents from the two local CTs are not available in the remote line end.

Whether it is possible to use one communication channel instead of two (as show in Figure 52) must be decided from case to case. It must be realized that correct information about bias currents is always available locally, while only distorted information is available in the end that receives the limited information over only one channel.

For more details about the remote communication, refer to section "".

6.3.2.6 Configuration of analog signals

The currents from the local end enter the IED via the Analog input modules as analog values. These currents need to be converted to digital values and then forwarded to Line differential protection in the local IED, as well as being transmitted to a remote IED via an LDCM (Line Differential Communication Module). The currents from a remote IED are received as digital values in the local IED via an LDCM and thereafter need to be forwarded to Line differential protectionn in the local IED.

The function LDLPSCH acts as the interface to and from Line differential protection.

The configuration of this data flow is made in the SMT tool, as shown in figure 53.

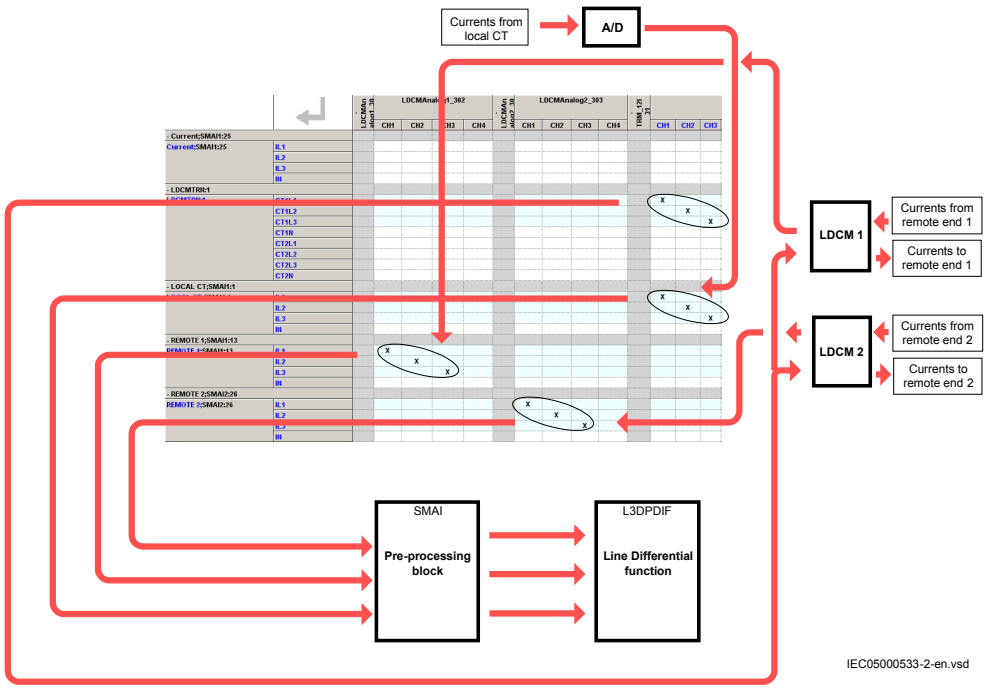

Figure 53: Typical configuration of the analog signals for a three terminal line

Figure 53 shows how one IED in a three terminal line differential protection can be configured. Notice that there are two LDCMs, each one supporting a duplex connection with a remote line end. Thus, the same local current is configured to both LDCMs, whilst the received currents from the LDCMs are configured separately to Line differential protection.

6.3.2.7 Configuration of LDCM output signals

There are a number of signals available from the LDCM that can be connected to the virtual binary inputs (SMBI) and used internally in the configuration. The signals appear only in the Signal Matrix tool where they can be mapped to the desired virtual input.

For explanation of the signals, refer to section Remote communication, Binary signal transfer to remote end in the technical reference manual. The signal name is found in the Object Properties window by clicking on the input signal number in the Signal Matrix tool. Connect the signals to the virtual inputs as desired, as shown in figure

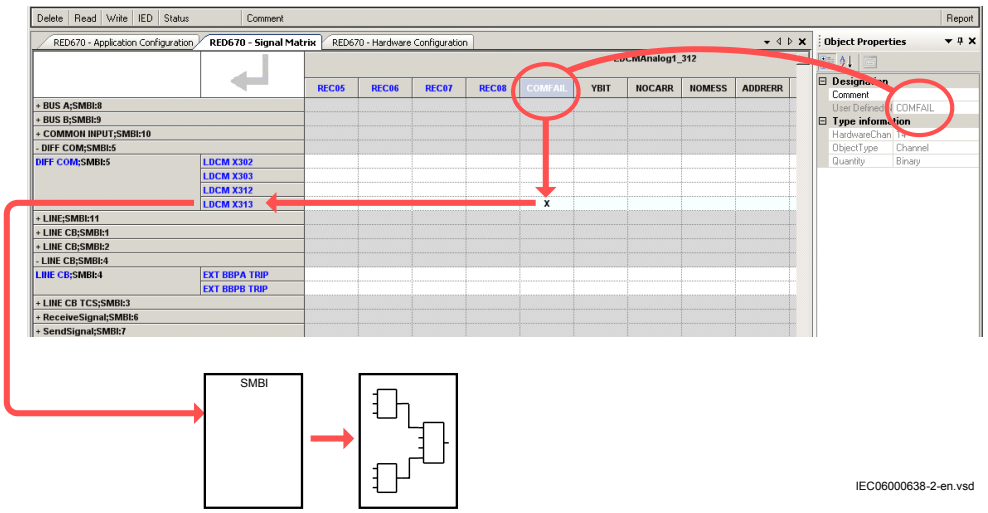

Figure 54: Example of LDCM signals as seen in the Signal matrix tool

6.3.2.8 Open CT detection

Line differential protection has a built-in, advanced open CT detection feature. This feature can block the unwanted operation created by the Line differential protection function in case of an open CT secondary circuit under a normal load condition. However, there is no guarantee that the Open CT algorithm prevents an unwanted disconnection of the protected circuit. The Open CT can be detected in approximately 14 ± 2 ms, and the differential protection might by that time in some cases have already issued a trip command. Nevertheless, the information on an open CT as the reason for trip is still very important. An alarm signal can also be issued to the substation operational personnel to make remedy action once the open CT condition is detected.

- Setting parameter *OpenCTEnable* enables and disables this feature.
- Setting parameter *tOCTAlarmDelay* defines the time delay after which the alarm signal is given.
- Setting parameter *tOCTResetDelay* defines the time delay after which the open CT condition resets once the defective CT circuits have been repaired.
- Once the open CT condition has been detected, all the differential protection functions are blocked except the unrestraint (instantaneous) differential protection. However, there is no guarantee that an unwanted disconnection of the protected circuit can always be prevented.
- For applications where the currents from two CTs are summated and sent over LDCM, the output `OPENCT` must be connected to CTFAIL on LDLPSCH logic in order for the Open CT detection to operate properly.

The outputs of the open CT conditions are OPENCT and OPENCTAL.

- OPENCT: Open CT detected
- OPENCTAL: Alarm issued after the setting delay

Outputs for information on the local HMI:

- OPENCTIN: Open CT in CT group inputs (1 for input 1 and 2 for input 2)
- OPENCTPH: Open CT with phase information (1 for phase A, 2 for phase B, 3 for phase C)

6.3.3 Setting guidelines

Line differential protection receives information about currents from all line terminals and evaluates this information in three different analysis blocks. The results of these analyses are then forwarded to an output logic, where the conditions for trip or no trip are checked.

The three current analyses are:

- Percentage restrained differential analysis
- The 2nd and 5th harmonic analysis (only if there is a power transformer included in the protected circuit)
- Internal/external fault discriminator

6.3.3.1 General settings

IBase set in primary Amp

Set a common *IBase* in Global base for the protected line (circuit). Most current settings for the protection function are then related to the *IBase*. The setting of *IBase* is normally made so that it corresponds to the maximum rated CT in any of the line terminals. For example, if all CTs used in a protected circuit are 1000A/1A, that is, the primary current rating is 1000 A, then IBase = 1000 A is a good choice.

NoOfUsedCTs

NoOfUsedCTs indicates to the function the number of three-phase CT sets included in the protected circuit. Note that one IED can process one or two local current terminals of the protected circuit. This is the case, for example, in breaker-and-a-half configurations in the line bay, where each of the two CT sets will be represented as one separate current terminal. A protected line with 1½ breaker configurations at each line end must consequently have *NoOfUsedCTs = 4*.

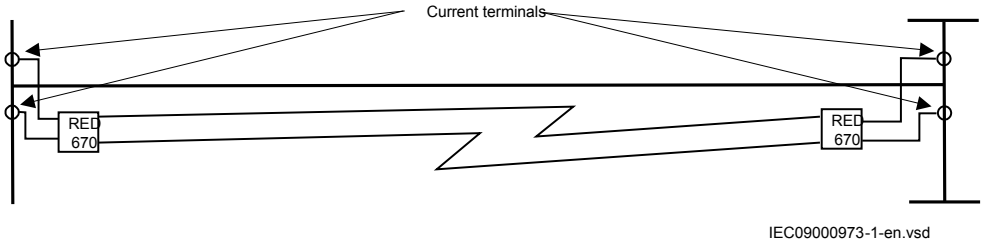

Figure 55: Example when setting NoOfUsedCTs = 4 in breaker-and-a-half configurations

6.3.3.2 Percentage restrained differential operation

Line differential protection is phase-segregated where the operate current is the vector sum of all measured currents taken separately for each phase. The restrain current, on the other hand, is considered the greatest phase current in any line end and it is common for all three phases. Observe that the protection may no more be phase-segregated when there is an in-line power transformer included in the protected circuit. These are usually of the Dy or Yd type and the three phases are related in a complicated way. For example, a single-phase earth fault on the wye side of the power transformer is seen as a two-phase fault on the delta side of the transformer.

Operation: Line differential protection function is switched on or off with this setting. If the parameter *Operation* is set to *Off* this IED is switched over to Slave mode and trip is initiated by the remote end IED.

The characteristic of the restrained differential function is shown in Figure 56. The restrained characteristic is defined by the settings:

1. *IdMin*
2. *EndSection1*
3. *EndSection2*
4. *SlopeSection2*
5. *SlopeSection3*

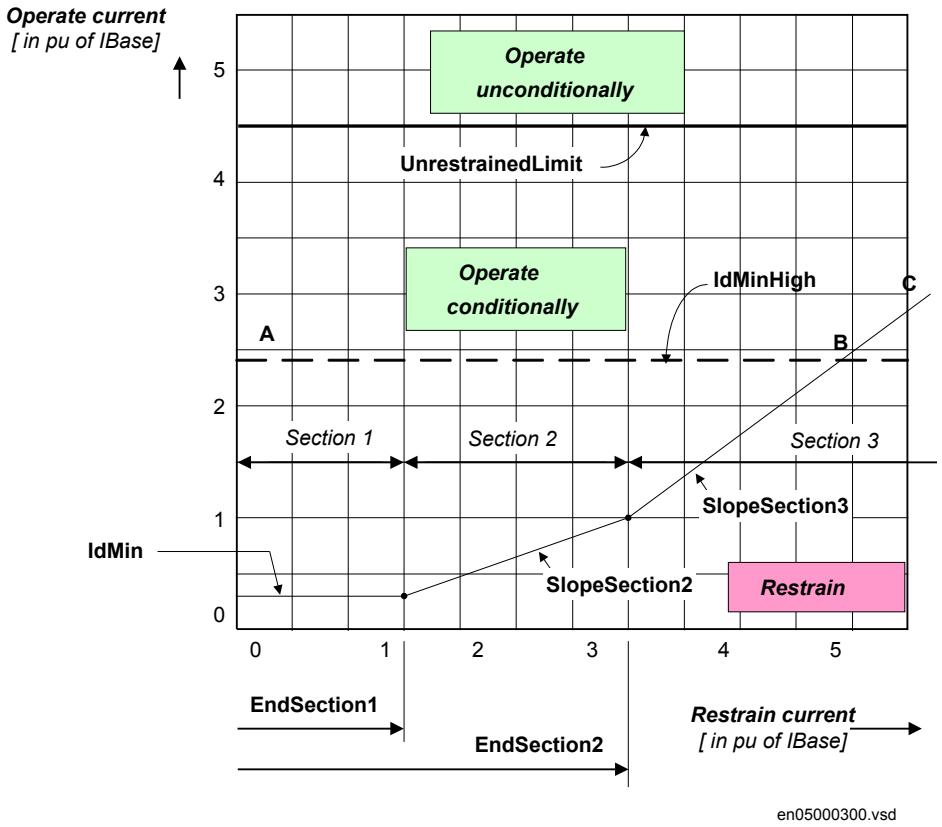

Figure 56: Restrained differential function characteristic (reset ratio 0.95)

where:

$$slope = \frac{\Delta Ioperate}{\Delta Irestrain} \cdot 100\%$$

Line differential protection is phase-segregated where the operate current is the vector sum of all measured currents taken separately for each phase. The restrain current, on the other hand, is considered as the greatest phase current in any line end and it is common for all three phases.

IdMin

This setting is a multiple of *IBase* and must take into account the fundamental frequency line charging current, and whether a power transformer is included in the protected zone or not.

The positive sequence line charging current is calculated according to equation 26.

$$I_{Charge} = \frac{V}{\sqrt{3} \cdot XC1} = \frac{V}{\sqrt{3} \cdot \frac{1}{2\pi f \cdot C_1}}$$

(Equation 26)

where:

V	is system voltage
X_{C1}	is capacitive positive sequence reactance of the line
f	is system frequency
C_1	is positive sequence line capacitance

If the charging current compensation is enabled, the setting of *IdMin* must be: *IdMin* ≥ 1.2 × ICharge, concidering some margin in the setting. If the charging current compensation is disabled, the setting of *IdMin* must be *IdMin* ≥ 2.5 × ICharge. In many cases, the charging current is quite small, which makes the lower limit of the setting range, that is 20% of *IBase* the practical limit of sensitivity.

When a power transformer is included in the protected zone, the setting of *IdMin* shall be the highest of recommendations considering charging current as described above and 0.3 × *IBase*.

IdMinHigh

The *IdMinHigh* setting is a multiple of *IBase* and used to temporarily decrease sensitivity in situations when the line is energized.

Energizing a line can cause transient charging currents to appear. These currents are pure differential currents, but as they are rich in harmonics, they can partly be measured by the differential protection, which in this case measures the Fourier-filtered differential current. Desensitizing the differential protection in this situation by using *IdMinHigh* instead of *IdMin* is a safety precaution, and a setting of 1.00 × *IBase* should be suitable in most cases.

If there is a power transformer included in the protected zone, energizing the line means that the transformer is energized at the same time. If the transformer nominal current is more than 50% of *IBase*, *IdMinHigh* is recommended to be set at 2.00 × *IBase*, otherwise it can be kept at 1.00 × *IBase*.

Switching of a transformer inside the protected zone does not normally occur. If the transformer is equipped with a breaker on the HV side, it would most probably not be included in the protected zone. However, tap transformers are sometimes connected with a disconnector on the HV side, and the normal procedure is then to energize the transformer with the disconnector. In such cases, where the tap (shunt) power

transformer's power rating is relatively small in comparison to the normal load of the circuit, connecting the tap power transformer to the voltage source, that is, to the protected line circuit, does usually not result in inrush currents high enough to be detected by the differential protection. This is especially the case if the tap power transformer is connected at a junction somewhere towards the middle of the protected line circuit, because the inrush phenomenon is effectively prevented in such cases. If a pickup signal is nevertheless issued by the differential protection, then the 2nd harmonic will prevent an unwanted trip. Observe that the harmonic inhibit algorithm is active as long as the bias current is below 125% of the base current *IBase*. (If there is an in-line power transformer included in the protected line circuit, then the harmonic inhibit algorithm is permanently activated, and can only be overridden if an internal fault has been detected.)

tIdMinHigh

This setting defines the time that *IdMinHigh* will be active after the previously dead protected circuit has been connected to the power source. If a power transformer is included in the protection zone, due to long duration of transformer inrush current the parameter should be set to 60 s. Otherwise a setting of 1 s is sufficient.

IdUnre

IdUnre is set as a multiple of *IBase*. Values of differential currents above the unrestrained limit generate a trip disregarding all other criteria, that is, irrespective of the internal or external fault discriminator and any presence of harmonics. It is intended for fast tripping of internal faults with high fault currents. The recommended setting is 120% of the highest through fault current that can appear on the protected line. Consequently, to set this value properly, the fault current must be calculated in each specific case.

For a short line or a situation with a breaker-and-a-half bay, the through fault current might be practically the same as the differential current at an internal fault. Extreme unequal CT saturation at external faults could then be a risk of unwanted operation if the unrestrained operation is used. Consequently, if the through fault currents can be of the same order as the maximum differential currents at internal faults, for example, when there is a source of power only on one side (in the branch with the first CT), and only load on the other side (in the branch with the other CT), it is recommended to refrain from using the unrestrained operation, by setting the max value *IdUnre* = 50 × *IBase*.

On long lines, the through fault current is often considerably less than the maximum differential current at internal faults, and a suitable setting of the unrestrained level is then easy to calculate.

When a transformer is included in the protected zone, the maximum inrush current must be considered when the unrestrained level is calculated. The inrush current appears from one side of the transformer, while the maximum differential current at

internal faults is limited by the source impedances on all sides of the transformer. Observe that if the power transformer is energized via a power line, even a short one, the inrush phenomenon is much less pronounced. The fundamental frequency of the inrush current will not be as high as when the power transformer is connected directly to a source with very low internal impedance.

EndSection1

EndSection1 is set as a multiple of *IBase*. The default value 1.25 is generally recommended. If the conditions are known more in detail, other values can be chosen in order to increase or decrease the sensitivity.

EndSection2

EndSection2 is set as a multiple of *IBase*. The default value 3.00 is generally recommended. If the conditions are known more in detail, other values can be chosen in order to increase or decrease the sensitivity.

SlopeSection2

SlopeSection2 is set as a percentage value: [delta operate current/delta restrain current] × 100%. The default value 40.0 is generally recommended. If the conditions are known more in detail, other values can be chosen in order to increase or decrease the sensitivity.

SlopeSection3

SlopeSection3 is set as a percentage value: [delta operate current/delta restrain current] × 100%. The default value 80.0 is generally recommended. If the conditions are known more in detail, other values can be chosen in order to increase or decrease the sensitivity.

6.3.3.3 The 2nd and 5th harmonic analysis

The 2nd and 5th harmonic block scheme is permanently active only if an in-line power transformer (A or B, alternatively both A and B) is part of the protected circuit. This is a must due to phenomena specific for power transformers, such as inrush and over-excitation. If there is no power transformer included in the protected multi-terminal line circuit, then the 2nd and 5th harmonic block scheme is only active under the following conditions:

- If the bias current is lower than 1.25 times *IBase*.
- Under external fault conditions.
- If *NegSeqDiffEn = Disabled* (the default is *Enabled*)

When the harmonic content is above the set level, the restrained differential operation is blocked. However, if a fault has been classified as internal by the negative sequence fault discriminator, any harmonic restraint is overridden.

I2/I1Ratio

The set value is the ratio of the 2nd harmonic component of the differential current to the fundamental frequency component of the differential current. To obtain this information, the instantaneous differential current must be analyzed.

Transformer inrush currents cause high degrees of the 2nd harmonic in the differential current. The default value of 15% is a reliable value to detect power transformer inrush currents.

CT saturation causes 2nd harmonics of considerable value on the CT secondary side, which contributes to the stabilization of the relay at through fault conditions. It is strongly recommended to maintain a sensitive setting of the *I2/I1Ratio* also when a power transformer is not included in the protected zone.

I5/I1Ratio

The set value is the ratio of the 5th harmonic of the differential current to the fundamental frequency of the differential current. To obtain this information, the instantaneous differential current must be analyzed.

A 20...30% over-excitation of a transformer can cause an increase in the excitation current of 10...100 times the normal value. This excitation current is a true differential current if the transformer is inside the protected zone. It has a high degree of the 5th harmonic, and the default setting of 25% will be suitable in most cases to detect the phenomenon. As CT saturation also causes 5th harmonics on the secondary side, it is recommended to maintain this setting at 25% or lower even if no power transformer is included in the protected zone.

6.3.3.4 Internal/external fault discriminator

NegSeqDiffEn

The negative sequence fault discriminator can be set *Enabled*/*Disabled*. It is an important complement to the percentage restrained differential function. As it is directional, it can distinguish between external and internal faults also in difficult conditions, such as CT saturation, and so on. It is strongly recommended that it is always activated (*Enabled*).

NegSeqROA

This is the setting of the relay operate angle of the negative sequence current based internal/external fault discriminator. The directional test is made so that the end with the highest negative sequence current is found. Then, the sum of the negative sequence currents at all other circuit ends is calculated. Finally, the relative phase angle between these two negative sequence currents is determined. See figure 57. Ideally the angle is zero degrees for internal faults and 180 degrees for external faults. However,

measuring errors caused by, for example, CT saturation as well as different phase angles of the negative sequence impedances, require a safety margin, expressed as the ROA (Relay Operate Angle). The default value 60 degrees is recommended in most cases. The setting *NegSeqROA* is a compromise between the security and dependability of the differential protection. The value *NegSeqROA* = 60 degrees emphasizes security against dependability. Tests have proven that 60 degrees is a good choice.

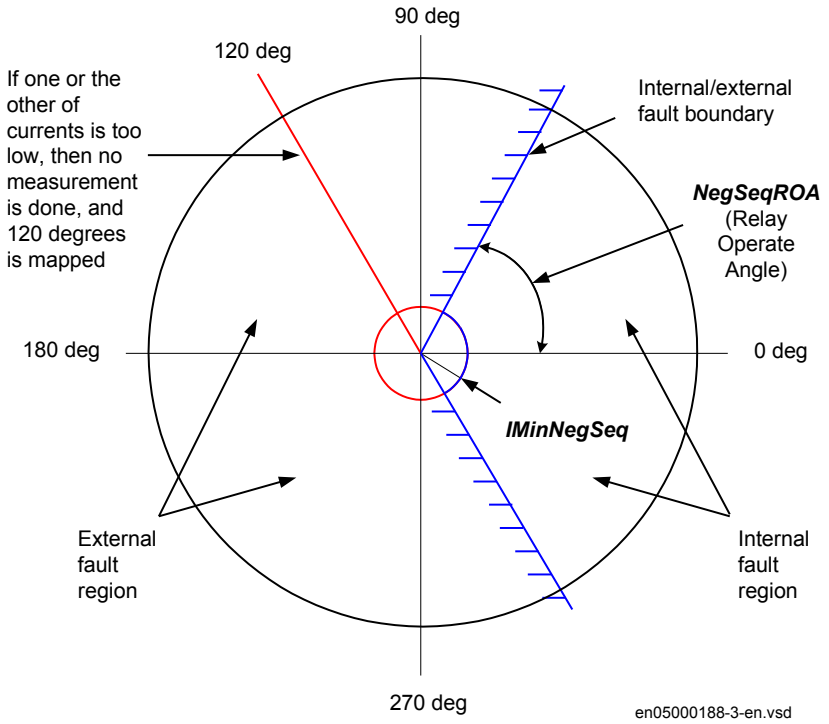

Figure 57: Negative sequence current function Relay Operate Angle (ROA)

IminNegSeq

IminNegSeq is set as a multiple of *IBase*. The local, and the sum of all remote negative sequence currents are compared separately if they are above the set threshold value *IminNegSeq*. If either is below the threshold, no comparison is made. Neither internal nor external fault is declared in this case. The default value 0.04 × *IBase* can be used if no special considerations, such as extremely week sources, are taken into account. Observe that internally, whenever the bias current is higher than 1.5 times *IBase*, the actual threshold is equal to the sum of *IminNegSeq* + 0.1 *Ibias*. This is in order to prevent wrong decisions of the internal/external fault discriminator under heavy three-phase external fault conditions with severe CT saturation.

6.3.3.5 Power transformer in the protected zone

One three-winding transformer or two two-winding transformers can be included in the line protection zone. The parameters below are used for this purpose. The alternative with one two-winding transformer in the protected zone is shown in figure 58 and figure 59.

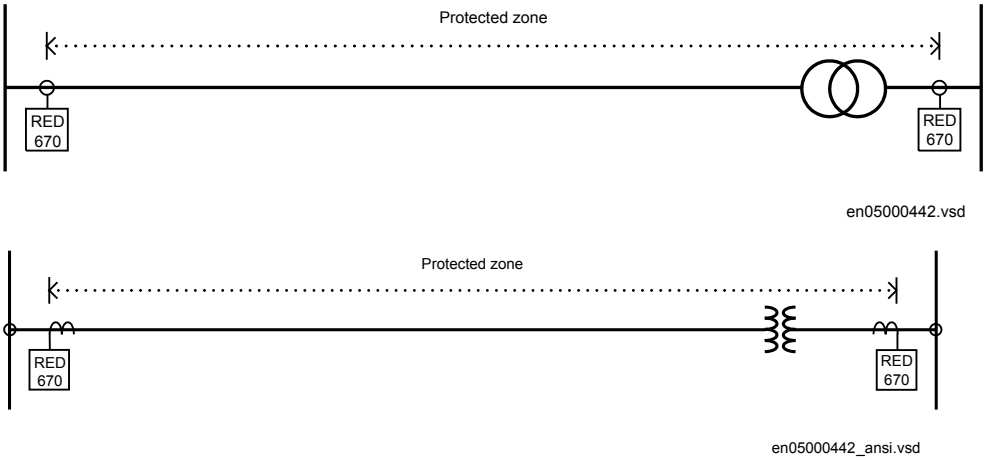

Figure 58: One two–winding transformer in the protected zone

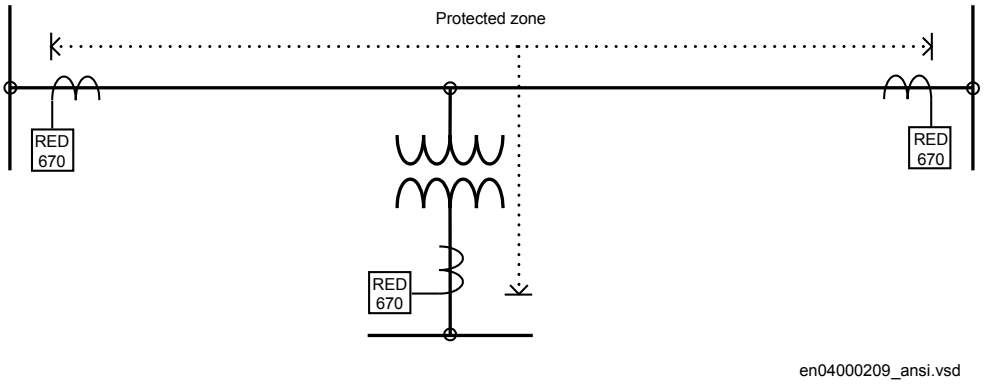

Figure 59: One two–winding transformer in the protected zone

An alternative with two two-winding transformers in the protected zone is shown in figure 60.

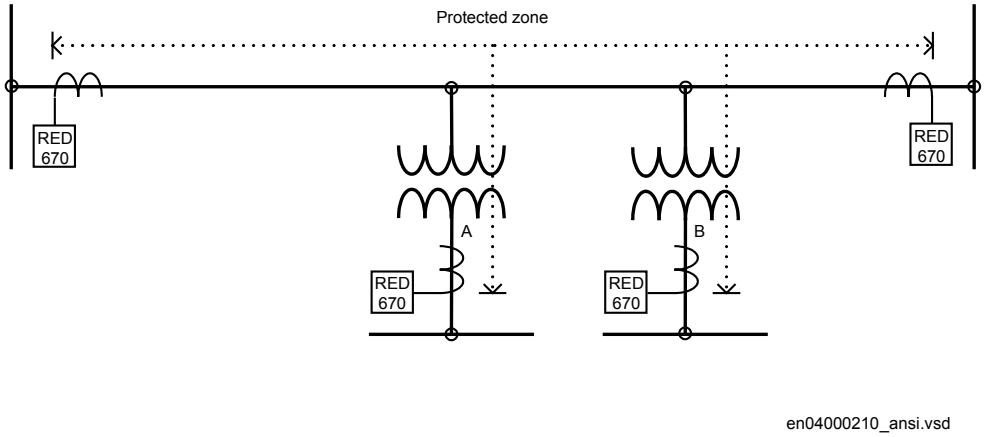

Figure 60: Two two–winding transformers in the protected zone

An alternative with one three-winding transformer in the protected zone is shown in figure 61. Observe that in this case, the three-winding power transformer is seen by the differential protection as two separate power transformers, A and B, which have one common winding on the HV side.

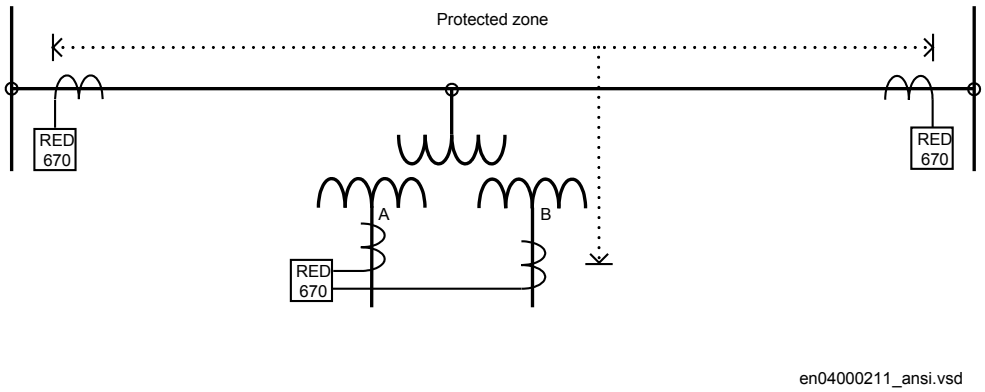

Figure 61: One three–winding transformer in the protected zone

TraAOnInpCh

This parameter is used to indicate that a power transformer is included in the protection zone at current terminal X. This can be either a two-winding transformer or the first secondary winding of a three-winding transformer. The current transformer feeding the IED is located at the low voltage side of the transformer. The parameter is set within the range 0...3 or 0...6, where 0 (zero) is used if no transformer A is included in the protection zone. This is one of the few settings that can be set differently for each separate master IED.

The setting specifies the current input on the differential current function block where the input current must be recalculated, that is, referred to the high voltage side, which is the reference side of the differential protection. The measured current, fed to the input channel determined by the setting *TraAOnInpCh*, will be recalculated to I ·*RatVoltW2TraA*/*RatVoltW1TraA* and shifted counterclockwise by the angle, determined by the product *ClockNumTransA* × 30 degrees.

RatVoltW1TraA

The rated voltage (kV) of the primary side (line side = high voltage side) of the power transformer A.

RatVoltW2TraA

The rated voltage (kV) of the secondary side (non-line side = low voltage side) of the power transformer A.

ClockNumTransA

This is the phase shift from primary to secondary side for power transformer A. The phase shift is given in intervals of 30 degrees, where 1 is -30 degrees, 2 is -60 degrees, and so on. The parameter can be set within the range 0...11.

TraBOnInpCh

This parameter is used to indicate that a power transformer is included in the protection zone at current terminal Y. This can be either a two-winding transformer or the second secondary winding of a three-winding transformer. The current transformer feeding the IED is located at the low voltage side of the transformer. The parameter is set within the range 0...3 or 0...6, where zero is used if no transformer B is included in the protection zone.

The setting specifies the current input on the differential current function block where the input current must be recalculated, that is, referred to the high voltage side, which is the reference side of the differential protection. The set input measured current I will be recalculated to I × *RatVoltW2TraB*/*RatVoltW1TraB* and shifted counterclockwise by the angle, determined by the product *ClockNumTransB* × 30 degrees.

RatVoltW1TraB

The rated voltage (kV) of the primary side (line side = high voltage side) of the power transformer B.

RatVoltW2TraB

The rated voltage (kV) of the secondary side (non-line side = low voltage side) of the power transformer B.

ClockNumTransB

This is the phase shift from primary to secondary side for power transformer B. The phase shift is given in intervals of 30 degrees, where 1 is -30 degrees, 2 is -60 degrees and so on. The parameter can be set within the range 0 – 11.

ZerSeqCurSubtr

The elimination of zero sequence currents in the differential protection can be set *Enabled*/*Disabled*. In case of a power transformer in the protected zone, where the zero sequence current cannot be transformed through the transformer, that is, in the great majority of cases, the zero sequence current must be eliminated.

CrossBlockEn

The possibility of cross-blocking can be set *Enabled*/*Disabled*. The meaning of cross-blocking is that the 2nd and 5th harmonic blocking in one phase also blocks the differential function of the other phases. It is recommended to enable the cross-blocking if a power transformer is included in the protection zone, otherwise not.

IMaxAddDelay

IMaxAddDelay is set as a multiple of *IBase*. The current level, under which a possible extra added time delay (of the output trip command), can be applied. The possibility for delayed operation for small differential currents is typically used for lines with a (minor) tapped transformer somewhere in the protected circuit and where no protection terminal of the multi-terminal differential protection is applied at the transformer site. If such a minor tap transformer is equipped with a circuit breaker and its own local protection, then this protection must operate before the line differential protection to achieve selectivity for faults on the low voltage side of the transformer. To ensure selectivity, the current setting must be higher than the greatest fault current for faults at the high voltage side of the transformer.

AddDelay

The possibility of delayed operation for small differential currents can be set *Enabled*/*Disabled*.

CurveType

This is the setting of type of delay for low differential currents.

tMinInv

This setting limits the shortest delay when inverse time delay is used. Operation faster than the set value of *tMinInv* is prevented.

If the user-programmable curve is chosen the characteristic of the curve is defined by equation 27.

$$t_{op} = TD\left(\frac{a}{\left(\frac{I_{Measured}}{IMaxAddDelay}\right)^{P} - c} + b\right)$$

(Equation 27)

where:

t_{op}	is operate time
TD	is time multiplier of the inverse time curve
a, b, c, p	are settings that will model the inverse time characteristic

6.3.3.6 Settings examples

Setting example for line with power transformer in the protected zone

In this section it is described how setting parameters can be chosen for a line with a power transformer in the protected zone. The line is shown in Figure 62, and the circuit impedances are shown in Figure 63. The protection zone is limited by the current transformers CT1, CT2 and CT3. The terminals are situated in two separate substations, Substation 1 and Substation 2. The circuit is protected by two protection terminals, Protection Terminal 1, and Protection Terminal 2. Except for a minor distortion of data due to the communication between the two protection terminals, the protection terminals process the same data. Both protection terminals are masters. If at least one of them signalizes an internal fault, the protected circuit is disconnected. Settings of Protection Terminal 1 and Protection Terminal 2 must be equal, except for a few parameters, which can be pointed out.

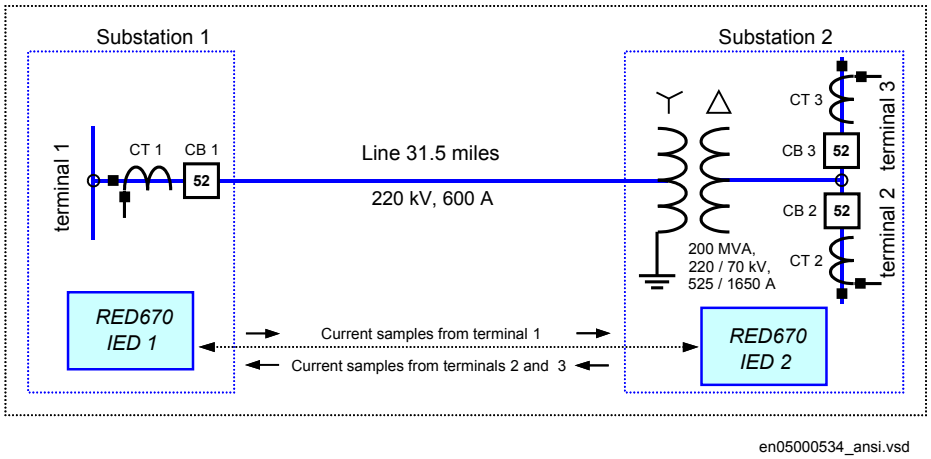

Figure 62: Line differential protection with power transformer in protected zone

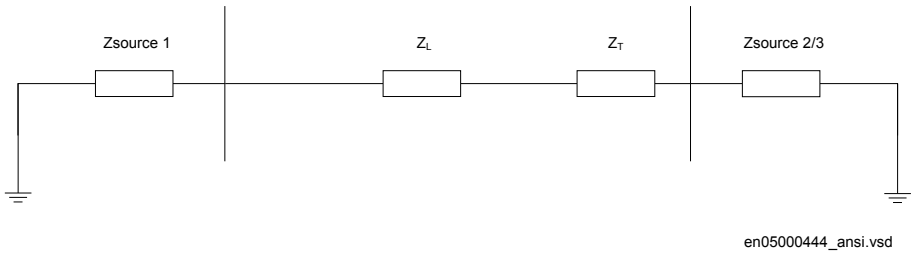

Figure 63: System impedances

where:

Line data is

$$Z_L \approx X_L = 15.0\Omega$$

Transformer data is

$$X\% = 10\% \Rightarrow X_{T220} = \frac{10}{100} \cdot \frac{220^2}{200} = 24.2\Omega$$

Source impedance is

$$Z_{Source1} = 7.0\Omega$$

$$Z_{Source2/3} = 5\Omega \Rightarrow (Z_{Source2/3})_{220} = \left(\frac{220}{70}\right)^2 \cdot 5 = 49.4\Omega$$

Table 13: General settings

Setting	IED 1	IED 2	Remarks
Operation	On	On	Operation Mode: On (active)
NoOfTerminals	3	3	Number of current sources, ends of the circuit
IBase (Global base)	600 A	600 A	Reference current of the protection in the primary (system) Amperes (Remark 1) IBase is set in the Global base values function (GBASVAL).
TransfAonInpCh	2	1	Input currents on these input channels will be referred to the high voltage side (Remark 2)
TraAWind1Volt	220 kV	220 kV	Transformer A, Y-side voltage in kV
TraAWind2Volt	70 kV	70 kV	Transformer A, d-side voltage in kV
ClockNumTransA	1	1	LV d-side lags Y-side by 30 degrees
TransfBonInpCh	3	2	Input currents on these input channels will be referred to the high voltage side (Remark 2)
TraBWind1Volt	220 kV	220 kV	Transformer B, Y-side voltage in kV
TraBWind2Volt	70 kV	70 kV	Transformer B, d-side voltage in kV
ClockNumTransB	1	1	LV d-side lags Y-side by 30 degrees
ZerSeqCurSubtr	On	On	Zero-sequence currents are subtracted from differential and bias currents (Remark 3)

Table 14: Setting group N

Setting	IED 1	IED 2	Remarks
ChargCurEnable	Off	Off	Charging current not eliminated (Default)
IdMin	0.35 · *IBase*	0.35 · *IBase*	Sensitivity in Section 1 of the operate - restrain characteristic
EndSection1	1.25 · *IBase*	1.25 · *IBase*	End of section 1 of the operate - restrain characteristic, as multiple of *IBase*
Table continues on next page			

Setting	IED 1	IED 2	Remarks
EndSection2	3.00 · *IBase*	3.00 · *IBase*	End of section 2 of the operate - restrain characteristic, as multiple of *IBase*
SlopeSection2	40%	40%	Slope of the operate - restrain characteristic in Section 2, in percent
SlopeSection3	80%	80%	Slope of the operate - restrain characteristic in Section 3, in percent
IdMinHigh	2.00 · *IBase*	2.00 · *IBase*	Temporarily decreased sensitivity, used when the protected circuit is connected to a power source (Remark 4)
IntervIdMinHig	30.000 s	30.000 s	Time interval when IdMinHig is active (Remark 5)
Idunre	5.50 · *IBase*	5.50 · *IBase*	Unrestrained operate, (differential) current limit (Remark 6)
CrossBlock	1	1	CrossBlock logic scheme applied (Remark 7)
I2/I1Ratio	15%	15%	Second to fundamental harmonic ratio limit
I5/I1Ratio	25%	25%	Fifth to fundamental harmonic ratio limit
NegSeqDiff	On	On	Internal/external fault discriminator On (Default)
IminNegSeq	0.04 · *IBase*	0.04 · *IBase*	Minimum value of negative-sequence current, as multiple of *IBase*
NegSeqROA	60.0 deg	60.0 deg	Internal/external fault discriminator operate angle (ROA), in degrees (Default)
AddDelay	Off	Off	Additional delay Off (Default)
ImaxAddDelay	1.00 · *IBase*	1.00 · *IBase*	Not applicable in this case (Default)
CurveType	15	15	Not applicable in this case (Default)
DefDelay	0.100 s	0.100 s	Not applicable in this case (Default)
IDMTtMin	0.010 s	0.010 s	Not applicable in this case (Default)

Table continues on next page

Setting	IED 1	IED 2	Remarks
TD	0.00	0.00	Not applicable in this case (Default)
p	0.02	0.02	Not applicable in this case (Default)
a	0.14	0.14	Not applicable in this case (Default)
b	1.00	1.00	Not applicable in this case (Default)
c	1.00	1.00	Not applicable in this case (Default)

Remarks:

1 The parameter *IBase* (set in the Global base values function (GBASVAL).) is the reference current of Line differential protection given in primary Amperes. CT1 in terminal 1 (at end 1) has ratio 600/5 and, based on that, we chose *IBase* to 600 A in this case.

2 In this case, only one physical power transformer is included in the protected circuit. However, in order to handle the situation with two CTs on the low-voltage side of the transformer, one more fictitious power transformer is introduced. Thus, transformer A can be thought of as being installed at the current terminal (end) 2, and transformer B, which is identical to A, can be thought of as being installed at the current terminal (end) 3. The currents, measured at current terminals (current sources) 2 and 3, are internally separately referred by the multi-terminal differential algorithm to the high-voltage side of the transformer, using one and the same transformation rule. This rule is defined by the power transformer transformation ratio and its type, which is Yd1 in this example. If an in-line power transformer is included in the protected zone, then the protected power lines are usually on the high-voltage side of the in-line power transformer. The differential algorithm always transforms the low-voltage side currents to the high-voltage side.

3 ground faults on the Y-side of the transformer will cause a zero sequence current that will flow in the Y-winding of the power transformer. This zero sequence current will not appear outside the transformer on the d-side, and will consequently not be measured by CT 2 and CT 3. Thus, in case a Y-side earth fault is external to the protected zone, the zero sequence current that passes the neutral point of the transformer will appear as false differential current. This could cause an unwanted trip if the zero sequence currents are not subtracted from all three fundamental frequency differential currents.

4 Energizing the circuit means that the power transformer will be energized at the same time. This is assumed to be made always from the high-voltage side, and the harmonic restraint will detect the inrush current and prevent a trip. Setting *IdMinHigh* = 2.00 · *IBase* is motivated in this case as the transformer is large.

Table continues on next page

5 The interval when *IdMinHigh* is active is set to 60 s because a power transformer is included in the protected circuit. As both IEDs process the same currents, both must have the same value set for *IdMinHigh*.

6 The unrestrained operate differential current value shall be greater than the highest through fault current. This current appears at a three-phase short circuit on the 33 kV side of the transformer and can be calculated as:

$$I_{Through} = \frac{220}{\sqrt{3} \cdot (7.0 + 15.0 + 24.2)} = 2.75kA$$

(Equation 32)

With a safety margin of 20% we get:

$$Idunre = \frac{1.2 \cdot I_{Through}}{Ibase} = \frac{1.2 \cdot 2.75kA}{0.6kA} = \frac{3.30kA}{0.6kA} = 5.50$$

(Equation 33)

7 The cross block logic shall always be active when there is a power transformer in the protected zone.

Setting example for a small Tap-off transformer

A typical example can be as per single line diagram below.

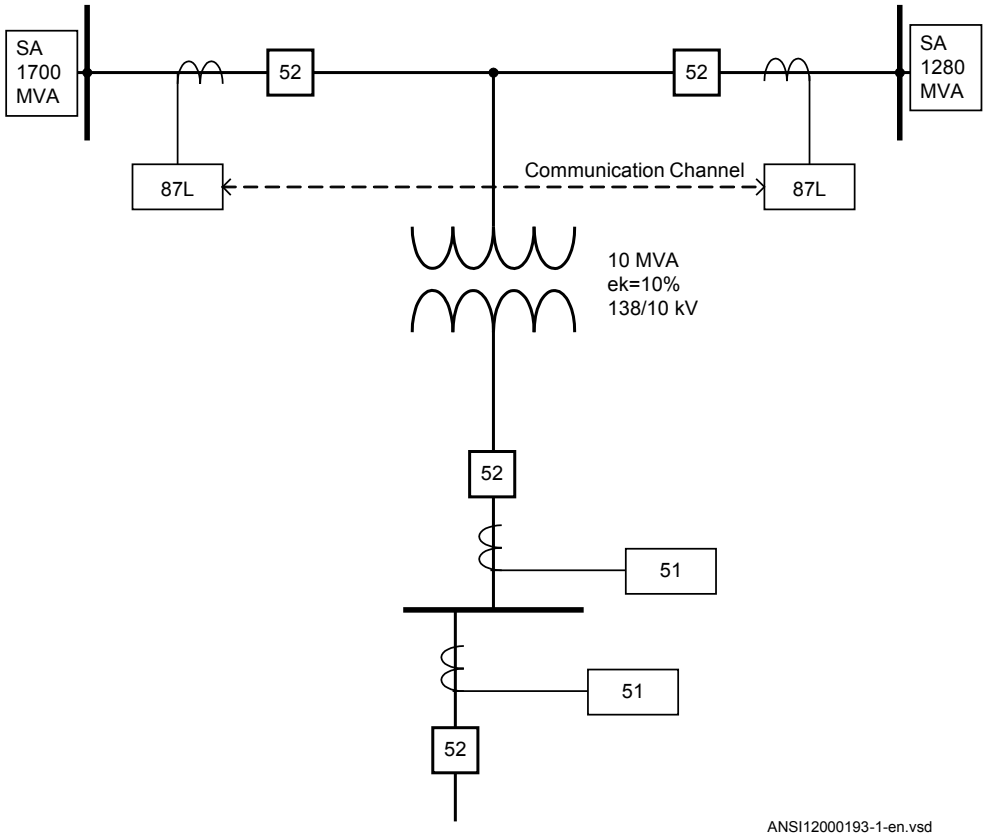

Figure 64: Setting example

Input data to the calculation

Apparent source power at A side: Ss_A = 1700 MVA

Line impedance from A to tap: Zl_A = 2.8 Ω

Line impedance from tap to B side: Zl_B = 1.2 Ω

Apparent source power at B side: Ss_B = 1280 MVA

Base current of differential current protection: I_{Base} = 42 A

Apparent power of transformer: S_n = 10 MVA

Short circuit impedance of transformer: e_k = 10%

Nominal voltage on transformer high voltage winding: V_n = 138 kV

Calculating of fault current at HV (High Voltage) side of the taped transformer for three phase fault on LV side

For convenience we choose calculation voltage to 138 kV.

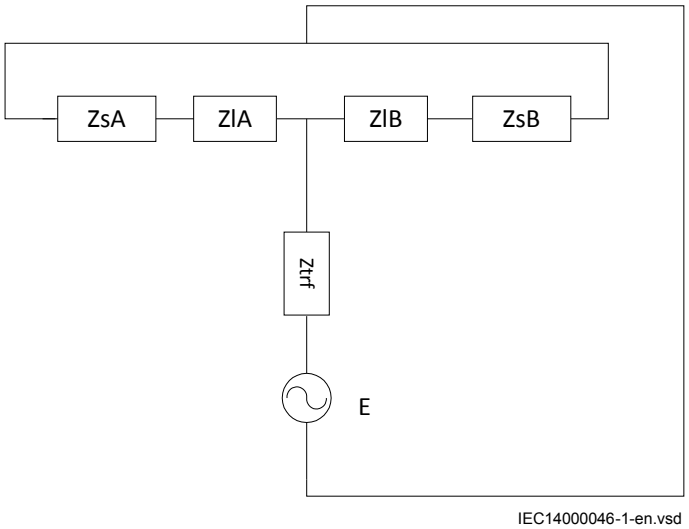

Figure 65: Thevenin equivalent for tap transformer

Converting of the sources into impedances gives:

$$Zs_A = \frac{138^2}{1700} = 11.2\Omega$$

(Equation 34)

$$Zs_B = \frac{138^2}{1200} = 15.9\Omega$$

(Equation 35)

Calculating of the short circuit impedance of the transformer gives:

$$Z_{trf} = \frac{e_k}{100} \times \frac{V_n^{\,2}}{S_n} = 0.1 \times \frac{138^2}{10} = 190.4\Omega$$

(Equation 36)

Based on the Thevenin equivalent below we calculate the fault current at HV side of the transformer as:

$$If_{138} = \frac{138}{\sqrt{3 \times Z_{res}}}$$

(Equation 37)

where:

$$Z_{res} = \frac{(Zs_A + Zl_a) \times (Zs_B + Zl_B)}{Zs_A + Zl_a + Zs_B + Zl_B} + Z_{trf} = 198\Omega$$

(Equation 38)

The numerical value for Z_{res} input in the formula for If_{138} gives If_{138} = 403 A

To avoid unwanted operation of the differential protection for fault on LV side of the transformer, the setting of *IdMin* must be set to:

$$> 1.2 \times \frac{If_{138}}{I_{Base}}$$

(Equation 39)

$$IdMin = 1.2 \times \frac{If_{138}}{I_{Base}} = 11.5$$

(Equation 40)

In order to allow the differential protection to be backup protection for internal faults and faults on the LV side of the transformer, we activate the function *AddDelay* by setting it to *On* and calculate suitable setting for the parameter *Imax AddDelay*. Differential currents below the threshold *Imax AddDelay* will be time delayed. We choose the value 2 times the rated current of the transformer on HV side. The setting will be:

$$ImaxAddDelay = 2 \times \frac{S_n}{\sqrt{3} \times V_n \times I_{Base}} = 2.0$$

(Equation 41)

Table 15: Backup protection example data

Station	Tap transformer 10 MVA		
Type of fault	Three phase fault		
Object	1 = 10 kV Line A	2 = T1 10 kV 50/51	3 = 130 kV 87L (ImaxAddDelay)
Settings	2 MVA	14 MVA	20 MVA
Characteristic	IEC Extr.inverse, k=0.5, A=80, p=2	IEC Norm.inverse k=0.12, A=0.14, p=0.02	IEC Norm.inverse k=0.18, A=0.14, p=0.02
High set stage	14 MVA	- - - -	- - - -

It is then important to achieve a proper back-up protection. The Short circuit protection on the outgoing bays and on the transformer LV side are set according to a prepared selectivity chart. An example is prepared and shown in Figure 66 where the setting of the short circuit protection on the LV side is 14 MVA and Normal Inverse with k=0.12 to give back-up to outgoing bays relays which are extremely inverse, selective to remote fuses.

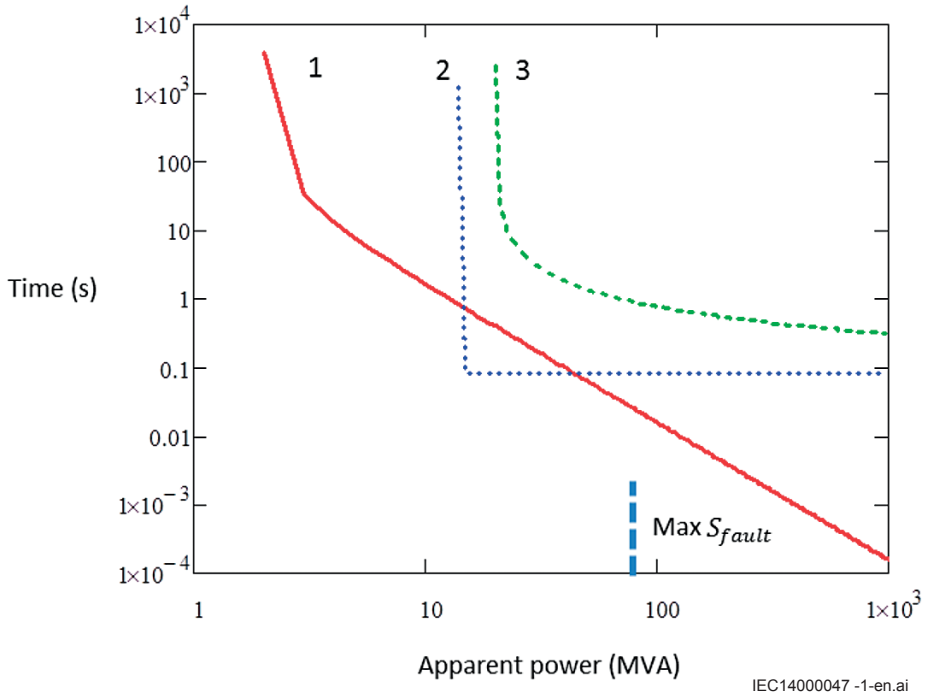

Figure 66: Selectivity chart

Setting example for two transformers in the zone, Master- Slave differential operation

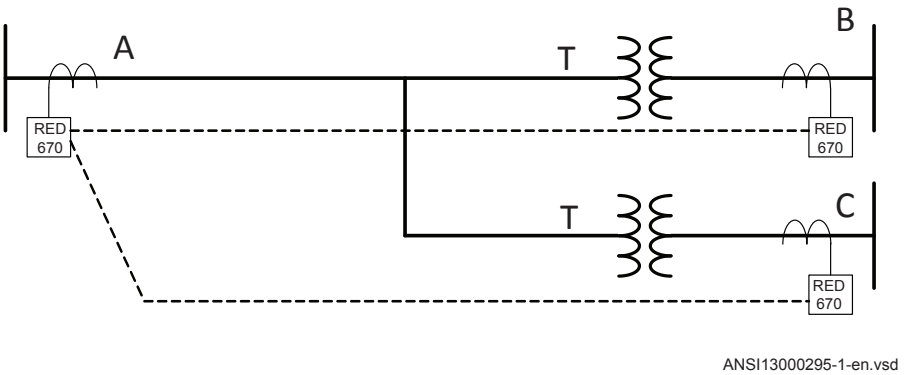

Figure 67: Master- Slave differential operation

Settings	Station A	Station B	Station C
PDIF	L3TC PDIF		
NoOfUsedCTs	3		
TraAOnInpCh	2		
TraBOnInpCh	3		

The protection at B and C are operating as Slaves (differential function switched off) and the currents are sent to the protection at A and received on channel 2 and 3. To inform the differential algorithm that the currents are from the low voltage sides of the transformers, *TraAOnInpCh* has to set to 2 and *TraBOnInpCh* to 3 (channel1 is reserved for local measurement) so that the proper turn ratio and vector group correction can be done.

Setting example for three-winding transformer in the zone

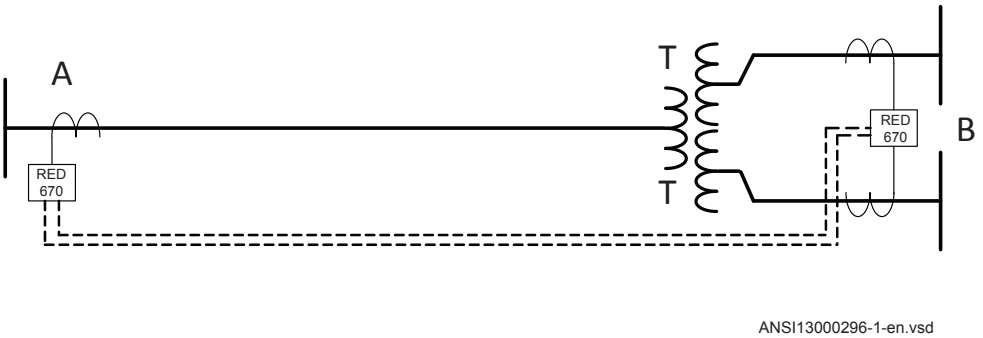

Figure 68: Three-winding transformer in the zone

Settings	Station A	Station B
PDIF	L3TC PDIF	L3TC PDIF
NoOfUsedCTs	3	3
T*raAOnInpCh*	2	1
TraBOnInpCh	3	2

The currents from the secondary and tertiary windings of the power transformer are connected to one RED670. The currents for each CT group are sent to the RED670 at A station by the LDCM. To inform the differential algorithm that the currents are from the low voltage sides of the transformer, *TraAOnInpCh* has to be set to 2 and *TraBOnInpCh* to 3 (channel1 is reserved for local measurement) so that the proper turn ratio and vector group correction can be done.

6.4 Additional security logic for differential protection LDRGFC (11)

6.4.1 Identification

Function description	IEC 61850 identification	IEC 60617 identification	ANSI/IEEE C37.2 device number
Additional security logic for differential protection	LDRGFC	-	11

6.4.2 Application

Additional security logic for differential protection LDRGFC (11) can help the security of the protection especially when the communication system is in abnormal status or for example when there is unspecified asymmetry in the communication link. It reduces the probability for mal-operation of the protection. LDRGFC (11) is more sensitive than the main protection logic to always release operation for all faults detected by the differential function. LDRGFC (11) consists of four sub functions:

- Phase-to-phase current variation
- Zero sequence current criterion
- Low voltage criterion
- Low current criterion

Phase-to-phase current variation takes the current samples (IL1–IL2, IL2–IL3, etc.) as input and it calculates the variation using the sampling value based algorithm. Phase-to-phase current variation function is major one to fulfil the objectives of the start up element.

Zero sequence criterion takes the zero sequence current as input. It increases security of protection during the high impedance fault conditions.

Low voltage criterion takes the phase voltages and phase to phase voltages as inputs. It increases the security of protection when the three phase fault occurred on the weak end side.

Low current criterion takes the phase currents as inputs and it increases the dependability during the switch onto fault case of unloaded line.

The differential function can be allowed to trip as no load is fed through the line and protection is not working correctly.

Features:

- Startup element is sensitive enough to detect the abnormal status of the protected system
- Startup element does not influence the operation speed of main protection
- Startup element detects the evolving faults, high impedance faults and three phase fault on weak side
- It is possible to block the each sub function of startup element
- Startup signal has a settable pulse time

The Additional security logic for differential protection LDRGFC (11) is connected as a local criterion to release the tripping from line differential protection. LDRGFC is connected with an AND gate to the trip signals from LDLPDIF function. Figure 69 shows a configuration for three phase tripping, but LDRGFC can be configured with individual release to all phases trip. The BFI_3P signal can also, through one of the available binary signal transfer channels, be sent to remote end and there connected to input REMSTEP. Normally, the local criterion is sufficient.

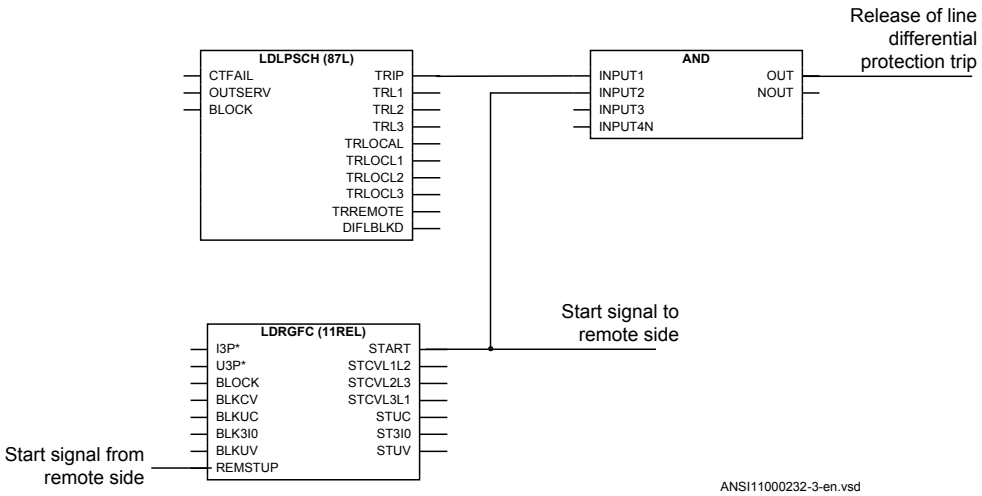

Figure 69: Local release criterion configuration for line differential protection

6.4.3 Setting guidelines

GlobalBaseSel: Selects the global base value group used by the function to define (*IBase*), (*VBase*) and (*SBase*).

tStUpReset: Reset delay of the startup signal. The default value is recommended.

Settings for phase-phase current variation subfunction are described below.

Enable CV: *Enabled*/*Disabled*, is set *Enabled* in most applications

Pick Up ICV: Level of fixed threshold given in % of *IBase*. This setting should be based on fault calculations to find the current increase in case of a fault at the point on the protected line giving the smallest fault current to the protection. The phase current shall be calculated for different types of faults (single phase-to-ground, phase-to-phase to ground, phase-to-phase and three phase short circuits) at different switching states in the network. In case of switching of large objects (shunt capacitor banks, transformers, and so on) large change in current can occur. The *Pick Up ICV* setting should ensure that all multi-phase faults are detected.

Time Delay CV: Time delay of zero sequence overcurrent criterion. Default value 0.002 s is recommended

Settings for zero sequence current criterion subfunction are described below.

Enable 3I0: *Enabled*/*Disabled*, is set *Enabled* for detection of phase-to-ground faults with high sensitivity

PU 3I0 : Level of high zero sequence current detection given in % of *IBase*. This setting should be based on fault calculations to find the zero sequence current in case of a fault at the point on the protected line giving the smallest fault current to the protection. The zero sequence current shall be calculated for different types of faults (single phase-to-groundand phase to phase to ground) at different switching states in the network.

t3I0: Time delay of zero sequence overcurrent criterion. Default value 0.0 s is recommended

Setting for low voltage criterion subfunction are described below.

OperationUV: *Enabled*/*Disabled*, is set *Enabled* for detection of faults by means of low phase-to-ground or phase-to-phase voltage

V_Ph-N: Level of low phase-ground voltage detection, given in % of *VBase*. This setting should be based on fault calculations to find the phase-ground voltage decrease in case of a fault at the most remote point where the differential protection shall be active. The phase-ground voltages shall be calculated for different types of faults (single phase-to-ground and phase to phase to ground) at different switching states in the network. The setting must be higher than the lowest phase-ground voltage during non-faulted operation.

V_Ph-Ph: Level of low phase-phase voltage detection, given in % of *VBase*. This setting should be based on fault calculations to find the phase-phase voltage decrease in case of a fault at the most remote point where the differential protection shall be active. The phase-phase voltages shall be calculated for different types of faults (single phase to ground and phase to phase to ground) at different switching states in the network. The setting must be higher than the lowest phase-phase voltage during non-faulted operation.

tUV: Time delay of undervoltage criterion. Default value 0.0 s is recommended

Settings for low current criterion subfunction are described below.

Operation37: *Enabled*/*Disabled*, is set *Enabled* when tripping is preferred at energizing of the line if differential does not behave correctly.

PU_37: Level of low phase current detection given in % of *IBase*. This setting shall detect open line ends and be below normal minimum load.

tUC: Time delay of undercurrent criterion. Default value is recommended to verify that the line is open.

Section 7 Impedance protection

7.1 Distance measuring zone, quadrilateral characteristic for series compensated lines ZMCPDIS (21), ZMCAPDIS (21), ZDSRDIR (21D)

7.1.1 Identification

Function description	IEC 61850 identification	IEC 60617 identification	ANSI/IEEE C37.2 device number
Distance measuring zone, quadrilateral characteristic for series compensated lines (zone 1)	ZMCPDIS	Z <	21
Distance measuring zone, quadrilateral characteristic for series compensated lines (zone 2-5)	ZMCAPDIS	Z <	21
Directional impedance quadrilateral, including series compensation	ZDSRDIR	Z<->	21D

7.1.2 Application

7.1.2.1 Introduction

Sub transmission networks are being extended and often become more and more complex, consisting of a high number of multi-circuit and/or multi terminal lines of very different lengths. These changes in the network will normally impose more stringent demands on the fault clearing equipment in order to maintain an unchanged or increased security level of the power system.

The distance protection function is designed to meet basic requirements for application on transmission and sub transmission lines (solid grounded systems) although it also can be used on distribution levels.

7.1.2.2 System grounding

The type of system grounding plays an important roll when designing the protection system. In the following sections, some hints with respect to distance protection are highlighted.

Solid grounded networks

In solid grounded systems the transformer neutrals are connected solidly to ground without any impedance between the transformer neutral and ground.

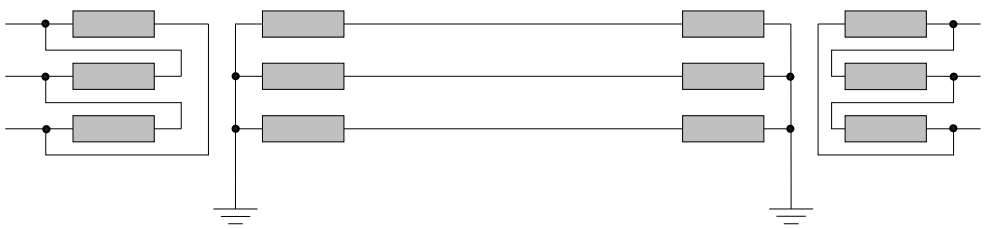

Figure 70: Solidly grounded network

The ground fault current is as high or even higher than the short-circuit current. The series impedances determine the magnitude of the fault current. The shunt admittance has very limited influence on the ground fault current. The shunt admittance may, however, have some marginal influence on the ground fault current in networks with long transmission lines.

The ground fault current at single phase -to-ground in phase A can be calculated as equation 42:

$$3I_0 = \frac{3 \cdot V_A}{Z_1 + Z_2 + Z_0 + 3Z_f} = \frac{V_A}{Z_1 + Z_N + Z_f}$$

(Equation 42)

Where:

VA	is the phase-to-ground voltage (kV) in the faulty phase before fault
Z1	is the positive sequence impedance (Ω/phase)
Z2	is the negative sequence impedance (Ω/phase)

Table continues on next page

Z0	is the zero sequence impedance (Ω/phase)
Zf	is the fault impedance (Ω), often resistive
ZN	is the ground return impedance defined as (Z0-Z1)/3

The voltage on the healthy phases is generally lower than 140% of the nominal phase-to-ground voltage. This corresponds to about 80% of the nominal phase-to-phase voltage.

The high zero sequence current in solid grounded networks makes it possible to use impedance measuring technique to detect ground-fault. However, distance protection has limited possibilities to detect high resistance faults and must, therefore, always be complemented with other protection function(s) that can carry out the fault clearance in those cases.

Effectively grounded networks

A network is defined as effectively grounded if the ground-fault factor fe is less than 1.4. The ground-fault factor is defined according to equation 43.

$$f_e = \left| \frac{V_{max}}{V_{pn}} \right|$$

(Equation 43)

Where:

V_{max}	is the highest fundamental frequency voltage on one of the healthy phases at single phase-to-ground fault.
V_{pn}	is the phase-to-ground fundamental frequency voltage before fault.

Another definition for effectively grounded network is when the following relationships between the symmetrical components of the network impedances are valid, as shown in equation 44 and equation 45.

$$X_0 \leq 3 \cdot X_1$$

(Equation 44)

$$R_0 \leq X_1$$

(Equation 45)

The magnitude of the ground fault current in effectively grounded networks is high enough for impedance measuring element to detect ground-fault. However, in the same way as for solid grounded networks, distance protection has limited possibilities to

detect high resistance faults and must, therefore, always be complemented with other protection function(s) that can carry out the fault clearance in this case.

7.1.2.3 Fault infeed from remote end

All transmission and most all sub transmission networks are operated meshed. Typical for this type of network is that we will have fault infeed from remote end when fault occurs on the protected line. The fault infeed may enlarge the fault impedance seen by the distance protection. This effect is very important to keep in mind when both planning the protection system and making the settings.

With reference to figure 71, we can draw the equation for the bus voltage Va at left side as:

$$\overline{V}_A = \overline{I}_A \cdot p \cdot Z_L + (\overline{I}_A + \overline{I}_B) \cdot R_f$$

(Equation 46)

If we divide Va by IA we get Z present to the IED at A side

$$\overline{Z}_A = \frac{\overline{V}_a}{\overline{I}_A} = p \cdot \overline{Z}_L + \frac{\overline{I}_A + \overline{I}_B}{\overline{I}_A} \cdot R_f$$

(Equation 47)

The infeed factor (IA+IB)/IA can be very high, 10-20 depending on the differences in source impedances at local and remote end.

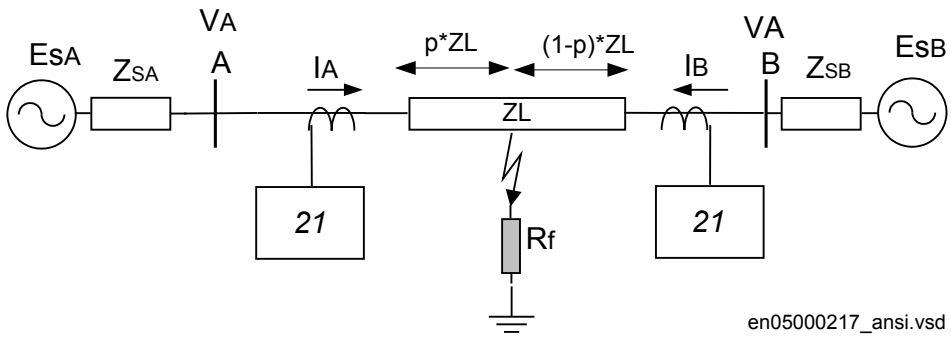

Figure 71: Influence of fault infeed from remote end

The effect of fault current infeed from remote end is one of the most driving factors to justify complementary protection to distance protection.

7.1.2.4 Load encroachment

Sometimes the load impedance might enter the zone characteristic without any fault on the protected line. The phenomenon is called load encroachment and it might occur when an external fault is cleared and high emergency load is transferred on the protected line. The effect of load encroachment is illustrated to the left in figure 72. The entrance of the load impedance inside the characteristic is not allowed and the way to handle this with conventional distance protection is to consider this with the settings that is, to have a security margin between the distance zone and the minimum load impedance. This has the drawback that it will reduce the sensitivity of the protection that is, the ability to detect resistive faults.

The IED has a built in function which shapes the characteristic according to the right figure 72. The load encroachment algorithm increases the possibility to detect high fault resistances, especially for line to ground faults at remote end. For example, for a given setting of the load angle *LdAngle* for the load encroachment function, the resistive blinder for the zone measurement can be expanded according to the right in figure 72 given higher fault resistance coverage without risk for unwanted operation due to load encroachment. This is valid in both directions.

The use of the load encroachment feature is essential for long heavy loaded lines, where there might be a conflict between the necessary emergency load transfer and necessary sensitivity of the distance protection. The function can also preferably be used on heavy loaded medium long lines. For short lines the major concern is to get sufficient fault resistance coverage and load encroachment is not a major problem. So, for short lines, the load encroachment function could preferable be switched off.

The settings of the parameters for load encroachment are done in the Phase selection with load enchroachment, quadrilateral characteristic (FDPSPDIS, 21) function.

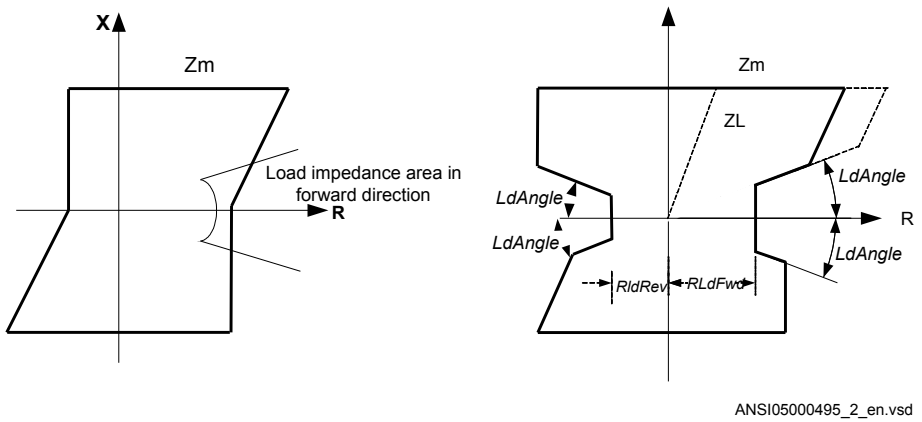

Figure 72: Load encroachment phenomena and shaped load encroachment characteristic

7.1.2.5 Long transmission line application

For long transmission lines the margin to the load impedance that is, to avoid load encroachment, will normally be a major concern. It is difficult to achieve high sensitivity for line to ground-fault at remote end of a long lines when the line is heavy loaded.

Definition of long lines with respect to the performance of distance protection can generally be described as in table 16, long lines have SIR's less than 0.5.

Table 16: Definition of long lines

Line category	Vn 110 kV	Vn 500 kV
Long lines	45-60 miles	200-250 miles
Very long lines	>60 miles	>250 miles

The possibility in IED to set resistive and reactive reach independent for positive and zero sequence fault loops and individual fault resistance settings for phase-to-phase and phase-to-ground fault together with load encroachment algorithm improves the possibility to detect high resistive faults at the same time as the security is improved (risk for unwanted trip due to load encroachment is eliminated), as shown in figure 73.

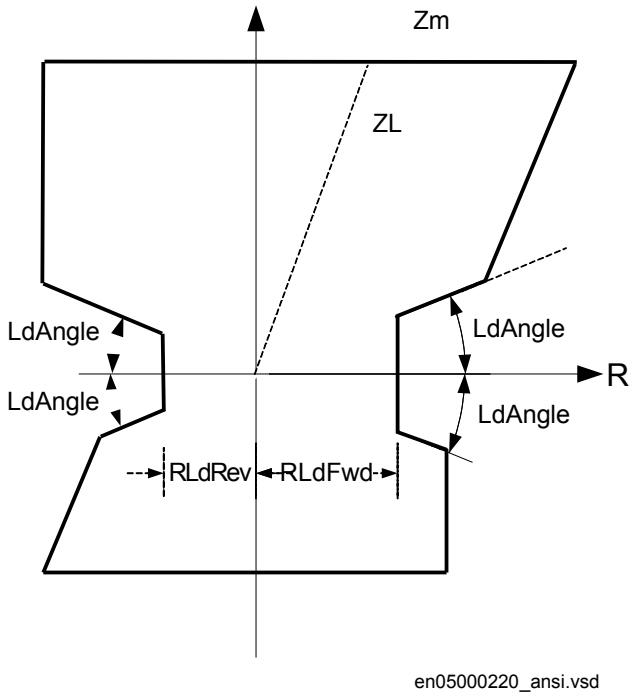

Figure 73: Characteristic for zone measurement for long line with load encroachment activated

7.1.2.6 Parallel line application with mutual coupling

General

Introduction of parallel lines in the network is increasing due to difficulties to get necessary area for new lines.

Parallel lines introduce an error in the measurement due to the mutual coupling between the parallel lines. The lines need not be of the same voltage to experience mutual coupling, and some coupling exists even for lines that are separated by 100 meters or more. The reason to the introduced error in measuring due to mutual coupling is the zero sequence voltage inversion that occurs.

It can be shown from analytical calculations of line impedances that the mutual impedances for positive and negative sequence are very small (< 1-2%) of the self impedance and it is practice to neglect them.

From an application point of view there exists three types of network configurations (classes) that must be considered when making the settings for the protection function. Those are:

- Parallel line with common positive and zero sequence network
- Parallel circuits with common positive but isolated zero-sequence network
- Parallel circuits with positive and zero sequence sources isolated

One example of class3 networks could be the mutual coupling between a 400 kV line and rail road overhead lines. This type of mutual coupling is not so common although it exists and is not treated any further in this manual.

For each type of network class we can have three different topologies; the parallel line can be in service, out of service, out of service and grounded in both ends.

The reach of the distance protection zone1 will be different depending on the operation condition of the parallel line. It is therefore recommended to use the different setting groups to handle the cases when the parallel line is in operation and out of service and grounded at both ends.

The distance protection within the IED can compensate for the influence of a zero-sequence mutual coupling on the measurement at single phase-to-ground faults in the following ways, by using:

- The possibility of different setting values that influence the ground-return compensation for different distance zones within the same group of setting parameters.
- Different groups of setting parameters for different operating conditions of a protected multi circuit line.

Most multi circuit lines have two parallel operating circuits. The application guide mentioned below recommends in more detail the setting practice for this particular type of line. The basic principles also apply to other multi circuit lines.

Parallel line applications

This type of networks are defined as those networks where the parallel transmission lines terminate at common nodes at both ends. We consider the three most common operation modes:

- parallel line in service
- parallel line out of service and grounded
- parallel line out of service and not grounded

Parallel line in service

This type of application is very common and applies to all normal sub-transmission and transmission networks.

Here is the description of what happens when a fault occurs on the parallel line, as shown in figure 74.

From symmetrical components, it is possible to derive the impedance Z at the IED point for normal lines without mutual coupling according to equation 48.

$$\bar{Z} = \frac{\bar{V}_{ph}}{\bar{I}_{ph} + 3\bar{I}_0 \cdot \frac{\bar{Z}_0 - \bar{Z}_1}{3 \cdot \bar{Z}_1}} = \frac{\bar{V}_{ph}}{\bar{I}_{ph} + 3\bar{I}_0 \cdot \bar{K}_N}$$

(Equation 48)

Where:

Vph	is phase-to-ground voltage at the IED point
Iph	is phase current in the faulty phase
3I0	is ground-fault current
Z1	is positive sequence impedance
Z0	is zero sequence impedance

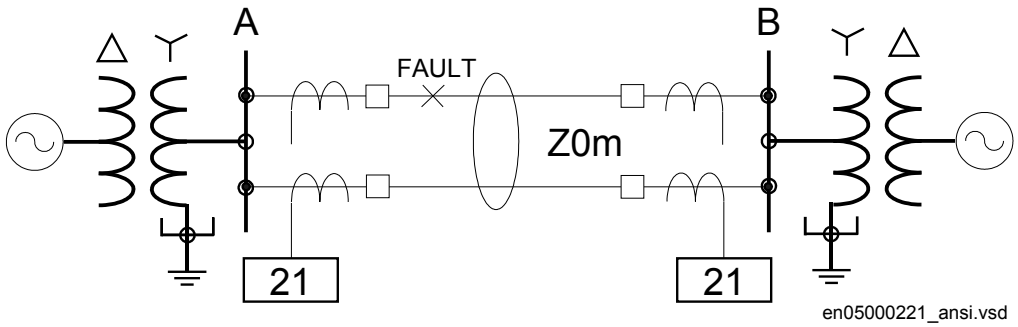

Figure 74: Class 1, parallel line in service

The equivalent circuit of the lines can be simplified, as shown in figure 75.

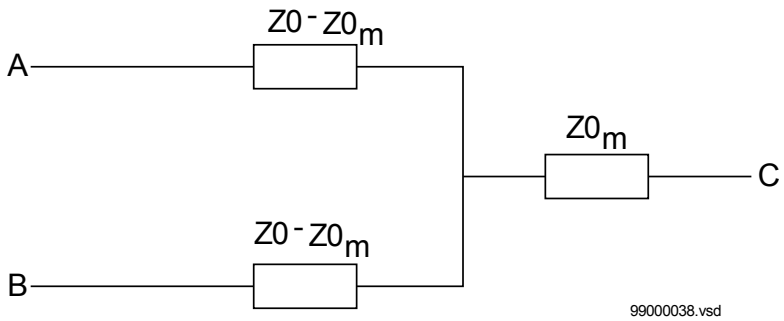

Figure 75: Equivalent zero sequence impedance circuit of the double-circuit, parallel, operating line with a single phase-to-ground-fault at the remote busbar

When mutual coupling is introduced, the voltage at the IED point A is changed, according to equation 49.

$$V_{ph} = \overline{Z}1_L \cdot \left(\overline{I}_{ph} + 3\overline{I}_0 \cdot \frac{\overline{Z}0_L - \overline{Z}1_L}{3 \cdot \overline{Z}1_L} + 3\overline{I}_{0p} \frac{\overline{Z}0_m}{3 \cdot \overline{Z}1_L} \right)$$

(Equation 49)

By dividing equation 49 by equation 48 and after some simplification we can write the impedance present to the IED at A side as:

$$Z = \overline{Z1_L} \left(1 + \frac{3\overline{I}0 \cdot \overline{K}Nm}{\overline{I}ph + 3\overline{I}0 \cdot \overline{K}N} \right)$$

(Equation 50)

Where:

KNm = Z0m/(3 · Z1L)

The second part in the parentheses is the error introduced to the measurement of the line impedance.

If the current on the parallel line has negative sign compared to the current on the protected line that is, the current on the parallel line has an opposite direction compared to the current on the protected line, the distance function overreaches. If the currents have the same direction, the distance protection underreaches.

Maximum overreach occurs if the fault infeed from remote end is weak. If we consider a single phase-to-ground fault at "p" unit of the line length from A to B on the parallel line for the case when the fault infeed from remote end is zero, we can draw the voltage V in the faulty phase at A side as in equation 51.

$$\overline{V_A} = \mathrm{p} \cdot \overline{Z1_L} \left(\overline{I_{ph}} + \overline{K_N} \cdot 3\overline{I_0} + \overline{K_{Nm}} \cdot 3\overline{I_{0p}} \right)$$

(Equation 51)

Notice that the following relationship exists between the zero sequence currents:

$$3\overline{I_0} \cdot \overline{Z0_L} = 3\overline{I0_p} \cdot \overline{Z0_L} \left(2 - p\right)$$

(Equation 52)

Simplification of equation 52, solving it for 3I0p and substitution of the result into equation 51 gives that the voltage can be drawn as:

$$\overline{V_A} = \mathrm{p} \cdot \overline{Z1_L} \left(\overline{I_{ph}} + \overline{K_N} \cdot 3\overline{I_0} + \overline{K_{Nm}} \cdot \frac{3\overline{I_0} \cdot \mathrm{p}}{2 - \mathrm{p}} \right)$$

(Equation 53)

If we finally divide equation 53 with equation 48 we can draw the impedance present to the IED as

$$\overline{Z} = p \cdot \overline{ZI_L} \left(\frac{\overline{I_{ph}} + \overline{KN} \cdot 3\overline{I_0} + \overline{KN_m} \cdot \frac{3\overline{I_0} \cdot p}{2 - p}}{I_{ph} + 3\overline{I_0} \cdot \overline{KN}} \right)$$

(Equation 54)

Calculation for a 400 kV line, where we for simplicity have excluded the resistance, gives with X1L=0.48 Ohm/Mile, X0L=1.4Ohms/Mile, zone 1 reach is set to 90% of the line reactance p=71% that is, the protection is underreaching with approximately 20%.

The zero-sequence mutual coupling can reduce the reach of distance protection on the protected circuit when the parallel line is in normal operation. The reduction of the reach is most pronounced with no infeed in the line IED closest to the fault. This reach reduction is normally less than 15%. But when the reach is reduced at one line end, it is proportionally increased at the opposite line end. So this 15% reach reduction does not significantly affect the operation of a permissive under-reach scheme.

Parallel line out of service and grounded

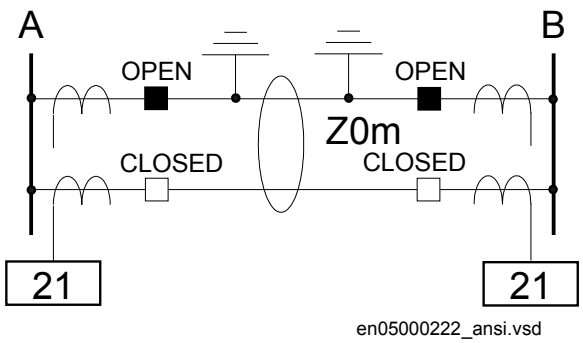

Figure 76: The parallel line is out of service and grounded

When the parallel line is out of service and grounded at both ends on the bus bar side of the line CT so that zero sequence current can flow on the parallel line, the equivalent zero sequence circuit of the parallel lines will be according to figure 76.

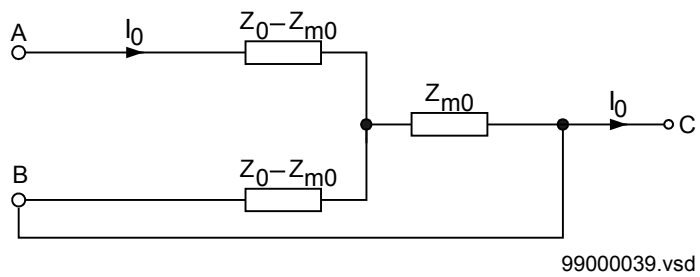

Figure 77: Equivalent zero-sequence impedance circuit for the double-circuit line that operates with one circuit disconnected and grounded at both ends

Here the equivalent zero sequence impedance is equal to Z0-Z0m in parallel with (Z0-Z0m)/Z0-Z0m+Z0m which is equal to equation 55.

$$\overline{Z}_E = \frac{\overline{Z}_0^2 - \overline{Z}_{om}^2}{\overline{Z}_0}$$

(Equation 55)

The influence on the distance measurement can be a considerable overreach, which must be considered when calculating the settings. It is recommended to use a separate setting group for this operation condition, since it reduces the reach considerably when the line is in operation. All expressions below are proposed for practical use. They assume the value of zero sequence, mutual resistance R0m equals to zero. They

consider only the zero-sequence, mutual reactance X0m. Calculate the equivalent X0E and R0E zero-sequence parameters according to equation 56 and equation 57 for each particular line section and use them for calculating the reach for the underreaching zone.

$$R_{0E} = R_0 \cdot \left(1 + \frac{X_{0m}^{\ 2}}{R_0^{\ 2} + X_0^{\ 2}} \right)$$

(Equation 56)

$$X_{0E} = X_0 \cdot \left(1 - \frac{X_{0m}^{\ 2}}{R_0^{\ 2} + X_0^{\ 2}} \right)$$

(Equation 57)

Parallel line out of service and not grounded

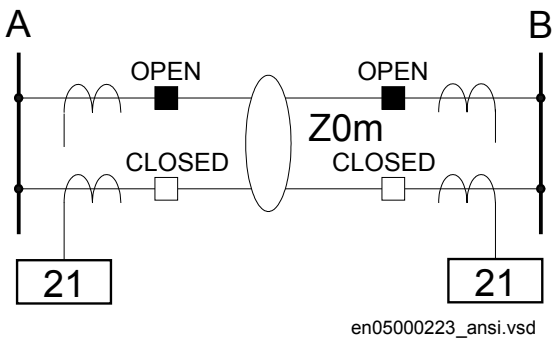

Figure 78: Parallel line is out of service and not grounded

When the parallel line is out of service and not grounded, the zero sequence on that line can only flow through the line admittance to the ground. The line admittance is high which limits the zero sequence current on the parallel line to very low values. In practice, the equivalent zero sequence impedance circuit for faults at the remote bus bar can be simplified to the circuit shown in figure 78.

The line zero-sequence mutual impedance does not influence the measurement of the distance protection in a faulty circuit. This means that the reach of the underreaching distance protection zone is reduced if, due to operating conditions, the equivalent zero sequence impedance is set according to the conditions when the parallel system is out of operation and grounded at both ends.

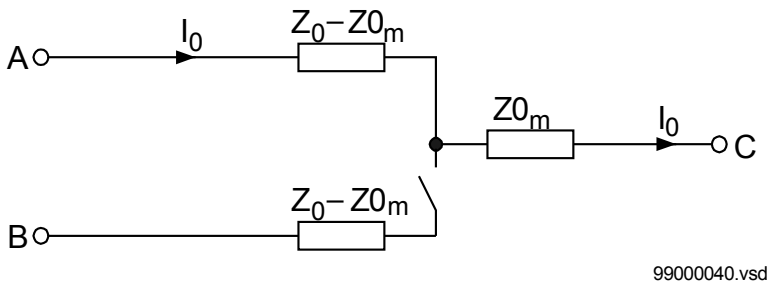

Figure 79: Equivalent zero-sequence impedance circuit for a double-circuit line with one circuit disconnected and not grounded

The reduction of the reach is equal to equation 58.

$$\overline{K}_U = \frac{\frac{1}{3}\cdot\left(2\cdot\overline{Z_1}+\overline{Z_{0E}}\right)+R_f}{\frac{1}{3}\cdot\left(2\cdot\overline{Z_1}+\overline{Z_0}\right)+R_f} = 1-\frac{\overline{Z_{m0}}^2}{\overline{Z_0}\cdot\left(2\cdot\overline{Z}_1+\overline{Z}_0+3R_f\right)}$$

(Equation 58)

This means that the reach is reduced in reactive and resistive directions. If the real and imaginary components of the constant A are equal to equation 59 and equation 60.

$$\mathrm{Re}(\overline{A}) = R0\cdot(2\cdot R1+R0+3\cdot Rf)-X0\cdot(X0+2\cdot X1)$$

(Equation 59)

$$\mathrm{Im}(\overline{A}) = X_0\cdot(2\cdot R_1+R_0+3\cdot R_1)+R_0\cdot(2\cdot X_1+X_0)$$

(Equation 60)

The real component of the KU factor is equal to equation 61.

$$\mathrm{Re}\left(\overline{K}_u\right) = 1+\frac{\mathrm{Re}\left(\overline{A}\right)\cdot X_{m0}{}^2}{\left[\mathrm{Re}\left(\overline{A}\right)\right]^2+\left[\mathrm{Im}\left(\overline{A}\right)\right]^2}$$

(Equation 61)

The imaginary component of the same factor is equal to equation 62.

$$\mathrm{Im}\left(\overline{K}_U\right) = \frac{\mathrm{Im}\left(\overline{A}\right) \cdot X_{m0}^{\ 2}}{\left[\mathrm{Re}\left(\overline{A}\right)\right]^2 + \left[\mathrm{Im}\left(\overline{A}\right)\right]^2}$$

(Equation 62)

Ensure that the underreaching zones from both line ends will overlap a sufficient amount (at least 10%) in the middle of the protected circuit.

7.1.2.7 Tapped line application

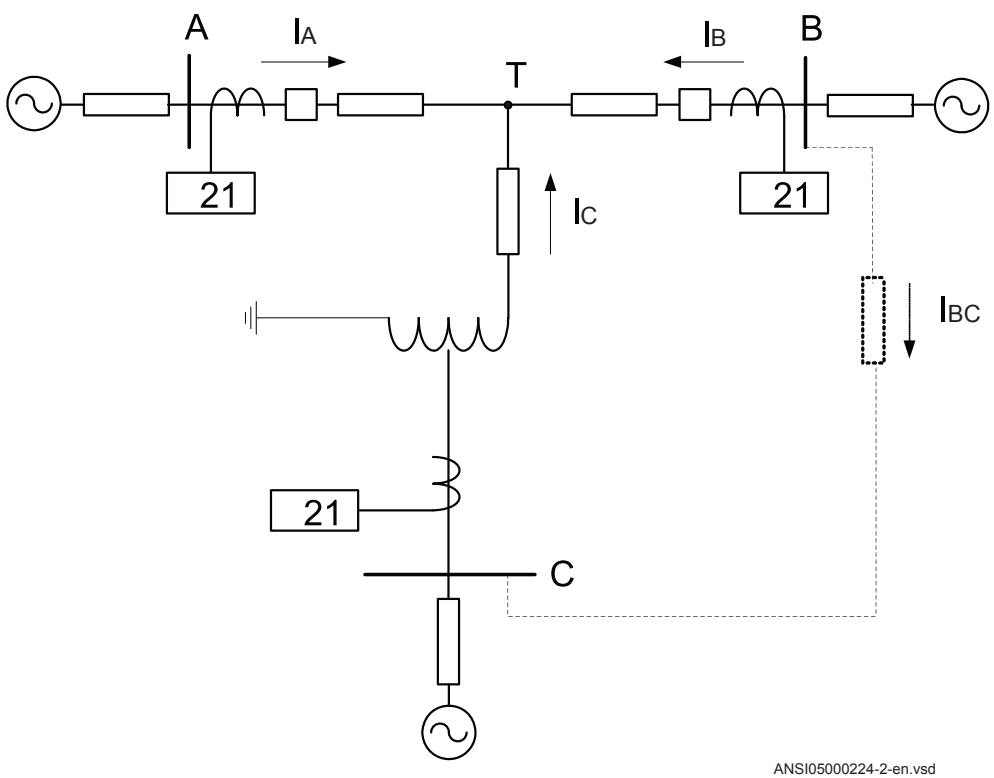

Figure 80: Example of tapped line with Auto transformer

This application gives rise to similar problem that was highlighted in section "Fault infeed from remote end" that is, increased measured impedance due to fault current infeed. For example, for faults between the T point and B station the measured impedance at A and C is as follows:

$$\bar{Z}_A = \bar{Z}_{AT} + \frac{\bar{I}_A + \bar{I}_C}{\bar{I}_A} \cdot \bar{Z}_{TF}$$

(Equation 63)

$$\bar{Z}_C = \bar{Z}_{Trf} + (\bar{Z}_{CT} + \frac{\dot{I}_A + \dot{I}_C}{\dot{I}_C} \cdot \bar{Z}_{TB}) \cdot (\frac{V2}{V1})^2$$

(Equation 64)

Where:

ZAT and ZCT	is the line impedance from the B respective C station to the T point.
IA and IC	is fault current from A respective C station for fault between T and B.
V2/V1	Transformation ratio for transformation of impedance at V1 side of the transformer to the measuring side V2 (it is assumed that current and voltage distance function is taken from V2 side of the transformer).

For this example with a fault between T and B, the measured impedance from the T point to the fault can be increased by a factor defined as the sum of the currents from T point to the fault divided by the IED current. For the IED at C, the impedance on the high voltage side V1 has to be transferred to the measuring voltage level by the transformer ratio.

Another complication that might occur depending on the topology is that the current from one end can have a reverse direction for fault on the protected line. For example, for faults at T the current from B might go in reverse direction from B to C depending on the system parameters (as shown in the dotted line in figure 80), given that the distance protection in B to T will measure wrong direction.

In three-end application, depending on the source impedance behind the IEDs, the impedances of the protected object and the fault location, it might be necessary to accept zone2 trip in one end or sequential trip in one end.

Generally for this type of application it is difficult to select settings of zone1 that both gives overlapping of the zones with enough sensitivity without interference with other zone1 settings that is, without selectivity conflicts. Careful fault calculations are necessary to determine suitable settings and selection of proper scheme communication.

Fault resistance

The performance of distance protection for single phase-to-ground faults is very important, because normally more than 70% of the faults on transmission lines are single phase-to-ground faults. At these faults, the fault resistance is composed of three

parts: arc resistance, resistance of a tower construction, and tower-footing resistance. The arc resistance can be calculated according to Warrington's formula:

$$Rarc = \frac{28707 \cdot L}{I^{1.4}}$$

(Equation 65)

where:

L represents the length of the arc (in meters). This equation applies for the distance protection zone 1. Consider approximately three-times arc foot spacing for the zone 2 and wind speed of approximately 30 m/h

I is the actual fault current in A.

In practice, the setting of fault resistance for both phase-to-ground (*RFPG*) and phase-to-phase (*RFPP*) must be as high as possible without interfering with the load impedance to obtain reliable fault detection.

7.1.2.8 Series compensation in power systems

The main purpose of series compensation in power systems is virtual reduction of line reactance in order to enhance the power system stability and increase loadability of transmission corridors. The principle is based on compensation of distributed line reactance by insertion of series capacitor (SC). The generated reactive power provided by the capacitor is continuously proportional to the square of the current flowing at the same time through the compensated line and series capacitor. This means that the series capacitor has a self-regulating effect. When the system loading increases, the reactive power generated by series capacitors increases as well. The response of SCs is automatic, instantaneous and continuous.

The main benefits of incorporating series capacitors in transmission lines are:

- Steady state voltage regulation and raise of voltage collapse limit
- Increase power transfer capability by raising the transient stability limit
- Improved reactive power balance
- Increase in power transfer capacity
- Active load sharing between parallel circuits and loss reduction
- Reduced costs of power transmission due to decreased investment costs for new power lines

Steady state voltage regulation and increase of voltage collapse limit

A series capacitor is capable of compensating the voltage drop of the series inductance in a transmission line, as shown in figure 81. During low loading, the system voltage

drop is lower and at the same time, the voltage drop on the series capacitor is lower. When the loading increases and the voltage drop become larger, the contribution of the series capacitor increases and therefore the system voltage at the receiving line end can be regulated.

Series compensation also extends the region of voltage stability by reducing the reactance of the line and consequently the SC is valuable for prevention of voltage collapse. Figure 82 presents the voltage dependence at receiving bus B (as shown in figure 81) on line loading and compensation degree K_C, which is defined according to equation 66. The effect of series compensation is in this particular case obvious and self explanatory.

$$K_C = \frac{X_C}{X_{Line}}$$

(Equation 66)

A typical 500 km long 500 kV line is considered with source impedance

$$Z_{SA1} = 0$$

(Equation 67)

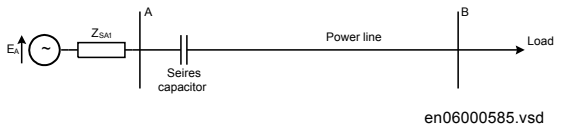

Figure 81: A simple radial power system

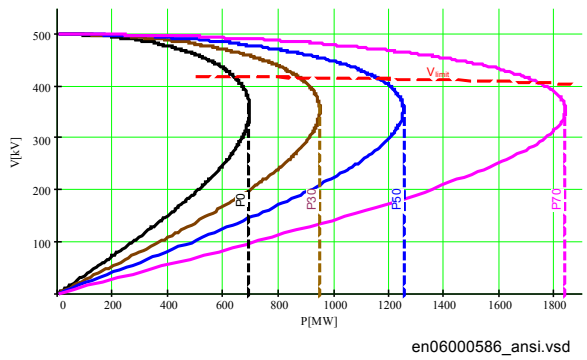

Figure 82: Voltage profile for a simple radial power line with 0, 30, 50 and 70% of compensation

Increased power transfer capability by raising the first swing stability limit

Consider the simple one-machine and infinite bus system shown in figure 83.

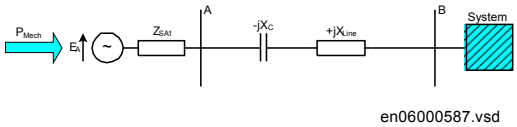

Figure 83: One machine and infinite bus system

The equal-areas criterion is used to show the effectiveness of a series capacitor for improvement of first swing transient stability (as shown in figure 84).

In steady state, the mechanical input power to the generator (P_{Mech}) is equal to the electrical output power from the generator (P_E) and the generator angle is δ_0. If a 3-phase fault occurs at a point near the machine, the electrical output of the generator reduces to zero. This means that the speed of the generator increases and the angle difference between the generator and the infinite bus increases during the fault. At the time of fault clearing, the angle difference has increased to δ_C. After reclosing of the system, the transmitted power exceeds the mechanical input power and the generator deaccelerates. The generator decelerates as long as equal area condition $A_{ACC}=A_{DEC}$ has not been fulfilled. The critical condition for post-fault system stability is that the angular displacement after fault clearing and during the deceleration does not exceed its critical limit δ_{CR}, because if it does, the system cannot get back to equilibrium and the synchronism is lost. The first swing stability and the stability margin can be evaluated by studying the different areas in figure 84 for the same system, once without SC and once with series compensation. The areas under the corresponding P – δ curves correspond to energy and the system remains stable if the accelerating energy that the generator picks up during the fault is lower than the decelerating energy that is transferred across the transmission line during the first system swing upon fault clearing.

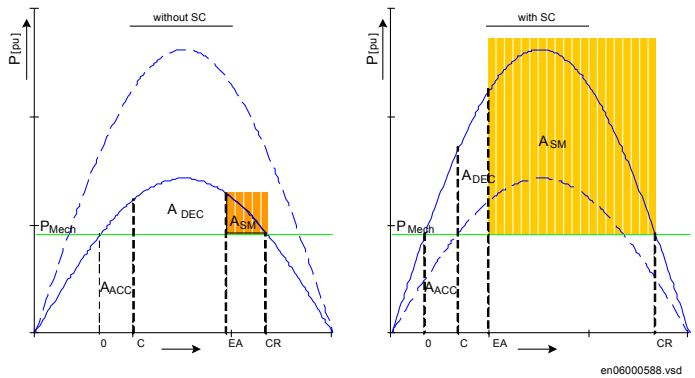

Figure 84: Equal area criterion and first swing stability without and with series compensation

This means that the system is stable if $A_{ACC} \leq (A_{DEC} + A_{SM})$. The stability margin is given by the difference between the available decelerating energy (area between the P (δ) and P_{Mech} and the angular difference between δ_C and δ_{CR}) and the accelerating energy. It is represented in figure 84 by the area A_{SM}. Notice that a substantial increase in the stability margin is obtained by installing a series capacitor. The series compensation can improve the situation in two ways, it can decrease the initial angle difference δ_0 corresponding to a certain power transfer and it also shifts the P – δ curve upwards.

Improve reactive power balance

A series capacitor increases its output of reactive power instantaneously, continuously and automatically with increasing line load. It is thus a self-regulating device, which improves voltage regulation and reduces the need for other means of voltage control for example, shunt compensation. The reactive power balance of a series compensated line is shown in figure 85 as an example for 500 km long 500 kV transmission line with 50% compensation degree.

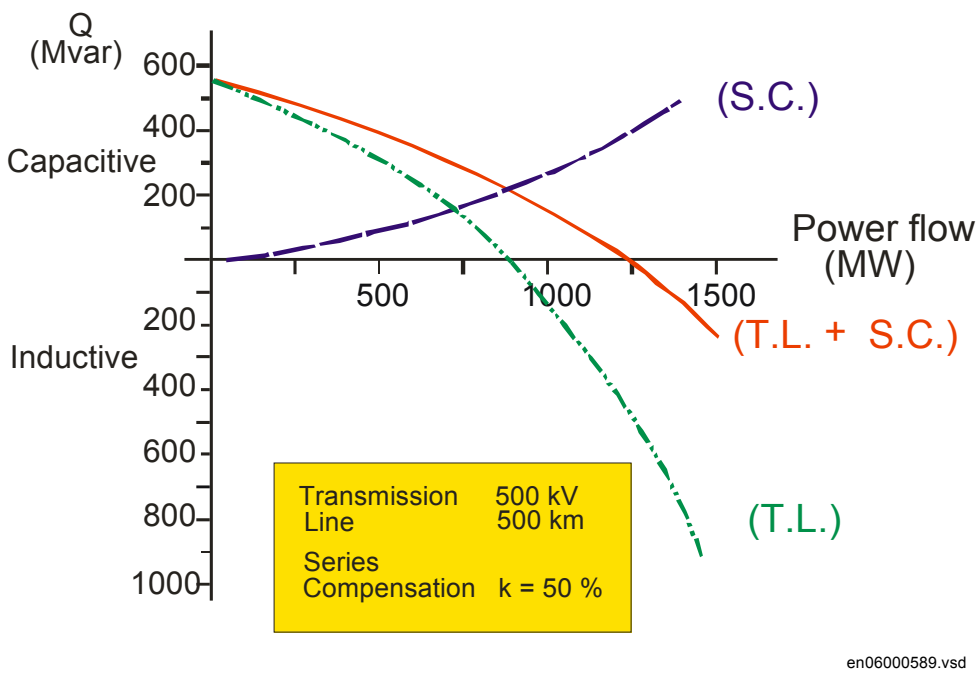

Figure 85: Self-regulating effect of reactive power balance

Increase in power transfer

The increase in power transfer capability as a function of the degree of compensation for a transmission line can be explained by studying the circuit shown in figure 86. The power transfer on the transmission line is given by the equation 68:

$$P = \frac{|V_A| \cdot |V_B| \cdot \sin(\delta)}{X_{Line} - X_C} = \frac{|V_A| \cdot |V_B| \cdot \sin(\delta)}{X_{Line} \cdot (1 - K_C)}$$

(Equation 68)

The compensation degree K_c is defined as equation 66

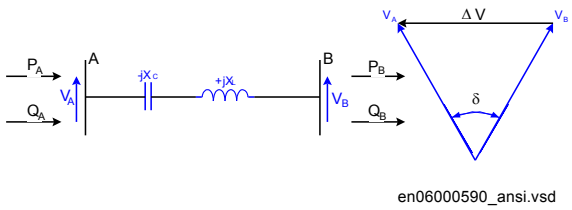

Figure 86: Transmission line with series capacitor

The effect on the power transfer when considering a constant angle difference (δ) between the line ends is illustrated in figure 87. Practical compensation degree runs from 20 to 70 percent. Transmission capability increases of more than two times can be obtained in practice.

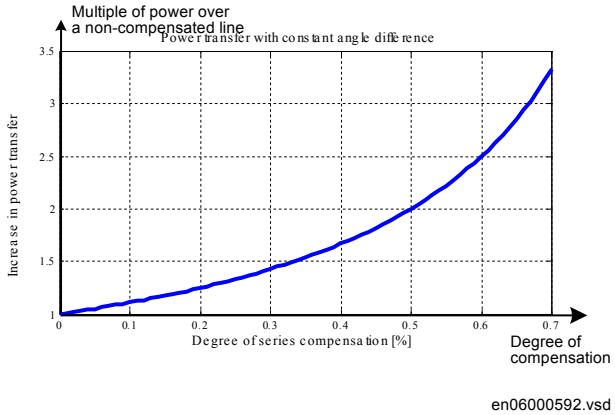

Figure 87: Increase in power transfer over a transmission line depending on degree of series compensation

Active load sharing between parallel circuits and loss reduction

A series capacitor can be used to control the distribution of active power between parallel transmission circuits. The compensation of transmission lines with sufficient thermal capacity can relieve the possible overloading of other parallel lines. This distribution is governed by the reactance, while the losses are determined by the resistance. A properly designed series compensation system can considerably reduce the total transmission system losses, as shown in figure 88.

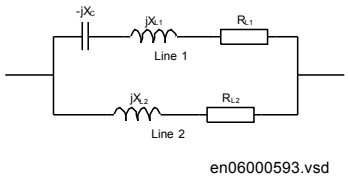

Figure 88: Two parallel lines with series capacitor for optimized load sharing and loss reduction

To minimize the losses, the series capacitor must be installed in the transmission line with the lower resistance. The size of the series capacitor that minimizes the total losses is given the following expression:

$$\frac{X_{L1} - X_C}{X_{L2}} = \frac{R_{L1}}{R_{L2}}$$

(Equation 69)

Reduced costs of power transmission due to decreased investment costs for new power line

As shown in figure 87 the line loading can easily be increased 1.5-2 times by series compensation. Thus, the required number of transmission lines needed for a certain power transfer can be significantly reduced. The cost of series compensation is small compared to the cost of a transmission line. When evaluating the cost of a transmission system upgrade also the cost of secondary equipment such as eventual upgrading of line protections on the compensated as well as, adjacent lines should be considered. The main advantages of series compensation against the new transmission line within the same corridor are:

- Significantly reduced investment costs; the same increase in power transmission for up to 90% reduced costs
- In many cases, the only practical way to increase the transmission capacity of a corridor
- Series compensation shortens the lead times
- Environmental impact

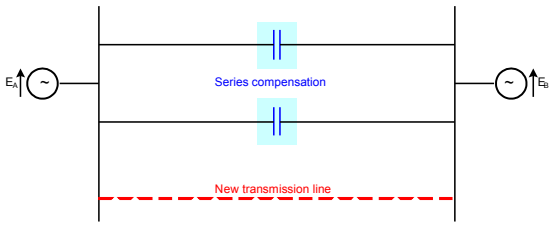

Figure 89: Series compensation is an important alternative to new transmission lines

Advancements in series compensation using thyristor switching technology

A thyristor switched series capacitor (TSSC) can be used for power flow control. This is performed by changing the reactance of the transmission circuit in discrete steps, as shown in figure 90. A TSSC typically consists of a few segments in series that can be inserted independently of each other in order to achieve different total series capacitor reactance.

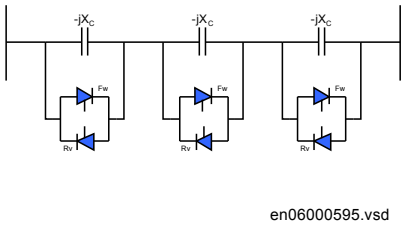

Figure 90: Thyristor switched series capacitor

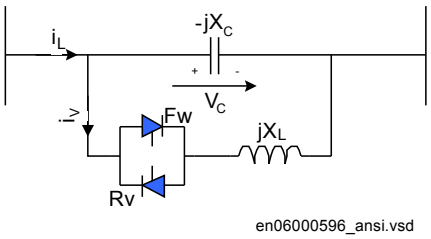

Figure 91: Thyristor controlled series capacitor

I_L Line current

I_V Current through the thyristor

U_C Voltage over the series capacitor

X_C Rated reactance of the series capacitor

A thyristor controlled series capacitor (TCSC) allows continuous control of the series capacitor reactance. This is achieved by adding current through the capacitor via the parallel thyristor valve path see figure 91. The main circuit of the TCSC consists of a capacitor bank and a thyristor controlled inductive branch connected in parallel. The capacitor bank may have a value of for example, 10...30 Ω/phase and a rated continuous current of 1500...3000 A. The capacitor bank for each phase is mounted on a platform providing full insulation towards ground. The thyristor valve contains a string of series connected high power thyristors with a maximum total blocking voltage in the range of hundreds of kV. The inductor is an air-core reactor with a few mH inductance. The wave forms of a TCSC in capacitive boost mode are shown in figure 92.

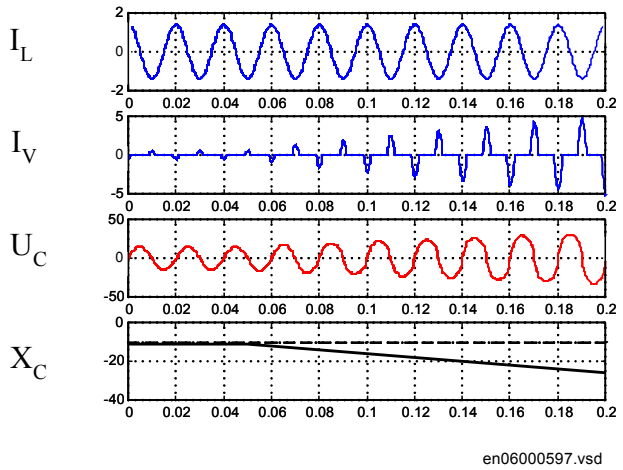

Figure 92: TCSC wave forms presented in capacitive boost mode for a typical 50Hz system

The apparent impedance of the TCSC (the impedance seen by the power system) can typically be increased to up to 3 times the physical impedance of the capacitor, see figure 93. This high apparent reactance will mainly be used for damping of power oscillations.

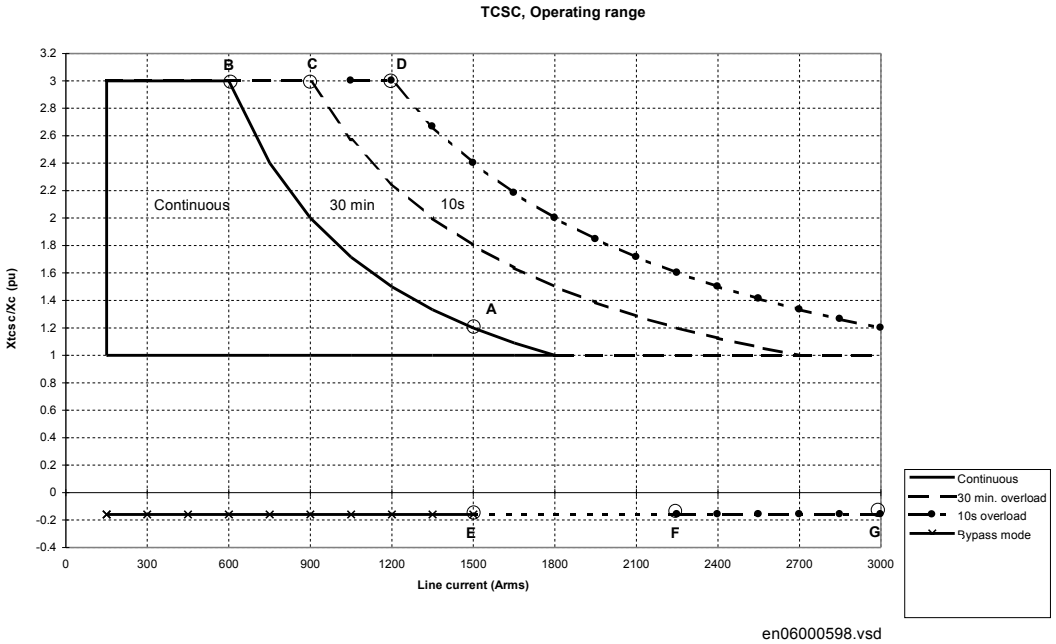

Figure 93: Operating range of a TCSC installed for damping of power oscillations (example)

During continuous valve bypass the TCSC represents an inductive impedance of about 20% of the capacitor impedance. Both operation in capacitive boost mode and valve bypass mode can be used for damping of power swings. The utilization of valve bypass increases the dynamic range of the TCSC and improves the TCSC effectiveness in power oscillation damping.

7.1.2.9 Challenges in protection of series compensated and adjacent power lines

System planning does not consider any more possible protection issues and difficulties, when deciding for a particular, non conventional solution of certain operation and stability problems. It is supposed that modern communication and state of the art computer technologies provides good basis for the required solution. This applies also to protection issues in series compensated networks. Different physical phenomena, which influence conventional principles of IED protection, like distance protection, phase comparison protection, are well known and accordingly considered in IED design. Some other issues, like influence of controlled thyristors in series capacitor banks are getting increased importance, although not as high as they would deserve.

The most important challenges, which influence the operation of different protection functions in the greatest extent, are described in this chapter.

Voltage and current inversion

Series capacitors influence the magnitude and the direction of fault currents in series compensated networks. They consequently influence phase angles of voltages measured in different points of series compensated networks and this performances of different protection functions, which have their operation based on properties of measured voltage and current phasors.

Voltage inversion

Figure 94 presents a part of series compensated line with reactance X_{L1} between the IED point and the fault in point F of series compensated line. The voltage measurement is supposed to be on the bus side, so that series capacitor appears between the IED point and fault on the protected line. Figure 95 presents the corresponding phasor diagrams for the cases with bypassed and fully inserted series capacitor.

Voltage distribution on faulty lossless serial compensated line from fault point F to the bus is linearly dependent on distance from the bus, if there is no capacitor included in scheme (as shown in figure 95). Voltage V_M measured at the bus is equal to voltage drop ΔV_L on the faulty line and lags the current I_F by 90 electrical degrees.

The situation changes with series capacitor included in circuit between the IED point and the fault position. The fault current I_F (see figure 95) is increased due to the series capacitor, generally decreases total impedance between the sources and the fault. The reactive voltage drop ΔV_L on X_{L1} line impedance leads the current by 90 degrees. Voltage drop ΔV_C on series capacitor lags the fault current by 90 degrees. Note that line impedance X_{L1} could be divided into two parts: one between the IED point and the capacitor and one between the capacitor and the fault position. The resulting voltage V_M in IED point is this way proportional to sum of voltage drops on partial impedances between the IED point and the fault position F, as presented by

$$V_M = I_F \cdot j\left(X_{L1} - X_C\right)$$

(Equation 70)

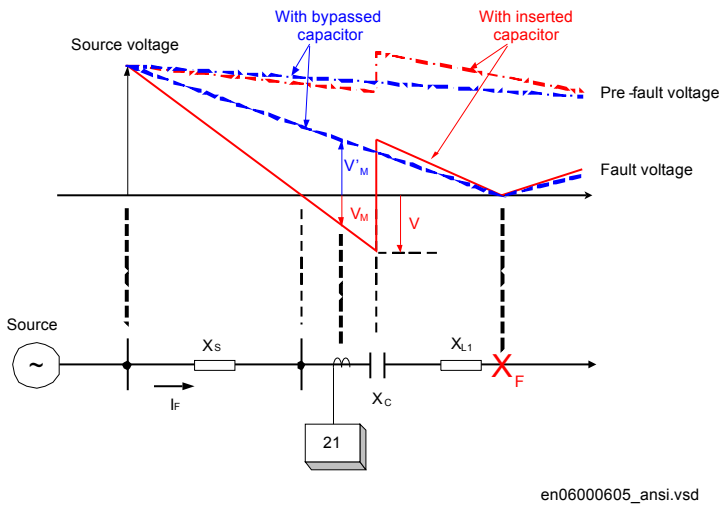

Figure 94: Voltage inversion on series compensated line

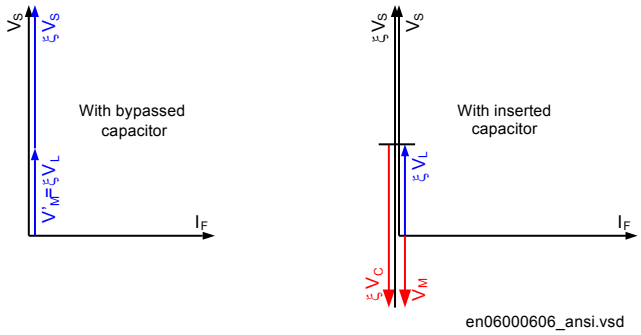

Figure 95: Phasor diagrams of currents and voltages for the bypassed and inserted series capacitor during voltage inversion

It is obvious that voltage V_M will lead the fault current I_F as long as $X_{L1} > X_C$. This situation corresponds, from the directionality point of view, to fault conditions on line without series capacitor. Voltage V_M in IED point will lag the fault current I_F in case when:

$$X_{L1} < X_C < X_S + X_{L1}$$

(Equation 71)

Where

X_S is the source impedance behind the IED

The IED point voltage inverses its direction due to presence of series capacitor and its dimension. It is a common practice to call this phenomenon voltage inversion. Its consequences on operation of different protections in series compensated networks depend on their operating principle. The most known effect has voltage inversion on directional measurement of distance IEDs (see chapter "Distance protection" for more details), which must for this reason comprise special measures against this phenomenon.

There will be no voltage inversion phenomena for reverse faults in system with VTs located on the bus side of series capacitor. The allocation of VTs to the line side does not eliminate the phenomenon, because it appears again for faults on the bus side of IED point.

Current inversion

Figure 96 presents part of a series compensated line with corresponding equivalent voltage source. It is generally anticipated that fault current I_F flows on non-compensated lines from power source towards the fault F on the protected line. Series capacitor may change the situation.

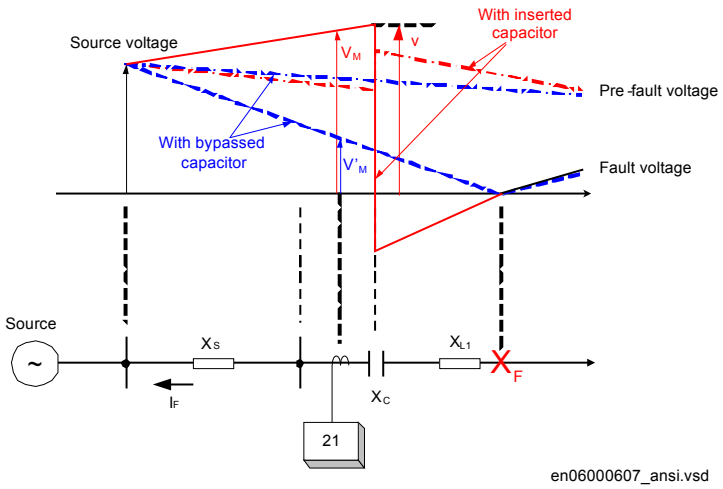

Figure 96: Current inversion on series compensated line

The relative phase position of fault current I_F compared to the source voltage V_S depends in general on the character of the resultant reactance between the source and the fault position. Two possibilities appear:

$$X_S - X_C + X_{L1} > 0$$
$$X_S - X_C + X_{L1} < 0$$

(Equation 72)

The first case corresponds also to conditions on non compensated lines and in cases, when the capacitor is bypassed either by spark gap or by the bypass switch, as shown in phasor diagram in figure 97. The resultant reactance is in this case of inductive nature and the fault currents lags source voltage by 90 electrical degrees.

The resultant reactance is of capacitive nature in the second case. Fault current will for this reason lead the source voltage by 90 electrical degrees, which means that reactive current will flow from series compensated line to the system. The system conditions are in such case presented by equation 73

$$X_C > X_S + X_{L1}$$

(Equation 73)

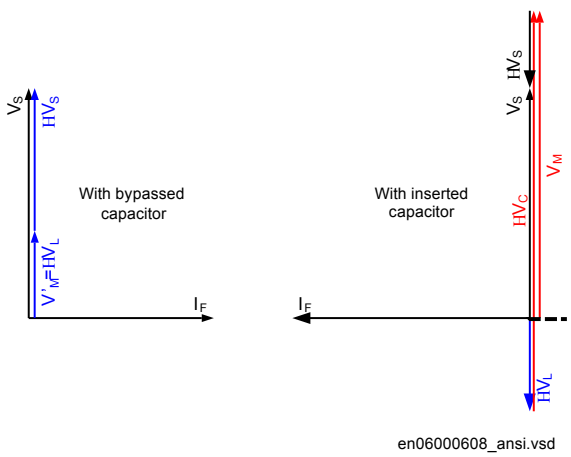

Figure 97: Phasor diagrams of currents and voltages for the bypassed and inserted series capacitor during current inversion

It is a common practice to call this phenomenon current inversion. Its consequences on operation of different protections in series compensated networks depend on their operating principle. The most known effect has current inversion on operation of distance IEDs (as shown in section "Distance protection" for more details), which cannot be used for the protection of series compensated lines with possible current inversion. Equation 73 shows also big dependence of possible current inversion on series compensated lines on location of series capacitors. $X_{L1} = 0$ for faults just behind the capacitor when located at line IED and only the source impedance prevents current inversion. Current inversion has been considered for many years only a theoretical possibility due to relatively low values of source impedances (big power plants) compared to the capacitor reactance. The possibility for current inversion in modern networks is increasing and must be studied carefully during system preparatory studies.

The current inversion phenomenon should not be studied only for the purposes of protection devices measuring phase currents. Directional comparison protections,

based on residual (zero sequence) and negative sequence currents should be considered in studies as well. Current inversion in zero sequence systems with low zero sequence source impedance (a number of power transformers connected in parallel) must be considered as practical possibility in many modern networks.

Low frequency transients

Series capacitors introduce in power systems oscillations in currents and voltages, which are not common in non-compensated systems. These oscillations have frequencies lower than the rated system frequency and may cause delayed increase of fault currents, delayed operation of spark gaps as well as, delayed operation of protective IEDs. The most obvious difference is generally seen in fault currents. Figure 98 presents a simplified picture of a series compensated network with basic line parameters during fault conditions. We study the basic performances for the same network with and without series capacitor. Possible effects of spark gap flashing or MOV conducting are neglected. The time dependence of fault currents and the difference between them are of interest.

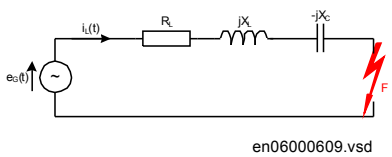

Figure 98: Simplified equivalent scheme of SC network during fault conditions

We consider the instantaneous value of generator voltage following the sine wave according to equation 74

$$e_G = E_G \cdot \sin\left(\omega \cdot t + \lambda\right)$$

(Equation 74)

The basic loop differential equation describing the circuit in figure 98 without series capacitor is presented by equation 75

$$L_L \cdot \frac{di_L}{dt} + R_L \cdot i_L = E_G \cdot \sin\left(\omega \cdot t + \lambda\right)$$

(Equation 75)

The solution over line current is presented by group of equations 76

$$i_L = \frac{E_G}{Z} \cdot \sin\left(\omega \cdot t + \lambda - \varphi\right) + \left[I_{L(t=0)} - \frac{E_G}{Z} \cdot \sin\left(\lambda - \varphi\right) \right] \cdot e^{-t \cdot \frac{R_L}{L_L}}$$

$$Z = \sqrt{R_L{}^2 + \left(\omega \cdot L_L\right)^2}$$

$$\varphi = atg\left(\frac{\omega \cdot L_L}{R_L}\right)$$

(Equation 76)

The line fault current consists of two components:

- The steady-state component which magnitude depends on generator voltage and absolute value of impedance included in the circuit
- The transient DC component, which magnitude depends on the fault incident angle decays with the circuit time constant

$$L_L / R_L \left[s\right]$$

(Equation 77)

The basic loop differential equation describing the circuit in figure 98 with series capacitor is presented by equation 78.

$$L_L \cdot \frac{d^2 i_l}{dt^2} + R_L \cdot \frac{di_L}{dt} + \frac{1}{C_L} i_L(t) = E_G \cdot \omega \cdot \cos\left(\omega \cdot t + \lambda\right)$$

(Equation 78)

The solution over line current is in this case presented by group of equations 79. The fault current consists also here from the steady-state part and the transient part. The difference with non-compensated conditions is that

- The total loop impedance decreases for the negative reactance of the series capacitor, which in fact increases the magnitude of the fault current
- The transient part consists of the damped oscillation, which has an angular frequency β and is dying out with a time constant α

$$i_L = \frac{E_G}{Z_{SC}} \cdot \sin\left(\omega \cdot t + \lambda - \varphi\right) + \left[K_1 \cdot \cos\left(\beta \cdot t\right) + K_2 \cdot \sin\left(\beta \cdot t\right)\right] \cdot e^{-\alpha \cdot t}$$

$$Z_{SC} = \sqrt{R_L{}^2 + \left(\omega \cdot L_L - \frac{1}{\omega \cdot C_L}\right)^2}$$

$$K_1 = I_{L(t=0)} - \frac{E_G}{Z_{SC}} \cdot \sin\left(\lambda - \varphi\right)$$

$$K_2 = \frac{1}{\beta \cdot L_L}\left[\begin{array}{l} E_G \cdot \sin\left(\lambda\right) - V_{C(t=0)} - \frac{R_L}{2} \cdot I_{L(t=0)} - \frac{E_G \cdot \omega \cdot L_L}{Z_{SC}} \cdot \cos\left(\lambda - \varphi\right) - \\ - \frac{E_G \cdot R_L}{2 \cdot Z_{SC}} \cdot \sin\left(\lambda - \varphi\right) \end{array}\right]$$

$$\alpha = \frac{R_L}{2 \cdot L_L}$$

$$\beta = \sqrt{\frac{1}{L_L \cdot C_L} - \frac{R_L^2}{4 \cdot L_L^2}}$$

(Equation 79)

The transient part has an angular frequency β and is damped out with the time-constant □.

The difference in performance of fault currents for a three-phase short circuit at the end of a typical 500 km long 500 kV line is presented in figure 99.

The short circuit current on a non-compensated line is lower in magnitude, but comprises at the beginning only a transient DC component, which diminishes completely in approximately 120ms. The final magnitude of the fault current on compensated line is higher due to the decreased apparent impedance of a line (60% compensation degree has been considered for a particular case), but the low frequency oscillation is also obvious. The increase of fault current immediately after the fault incidence (on figure 99 at approximately 21ms) is much slower than on non-compensated line. This occurs due to the energy stored in capacitor before the fault.

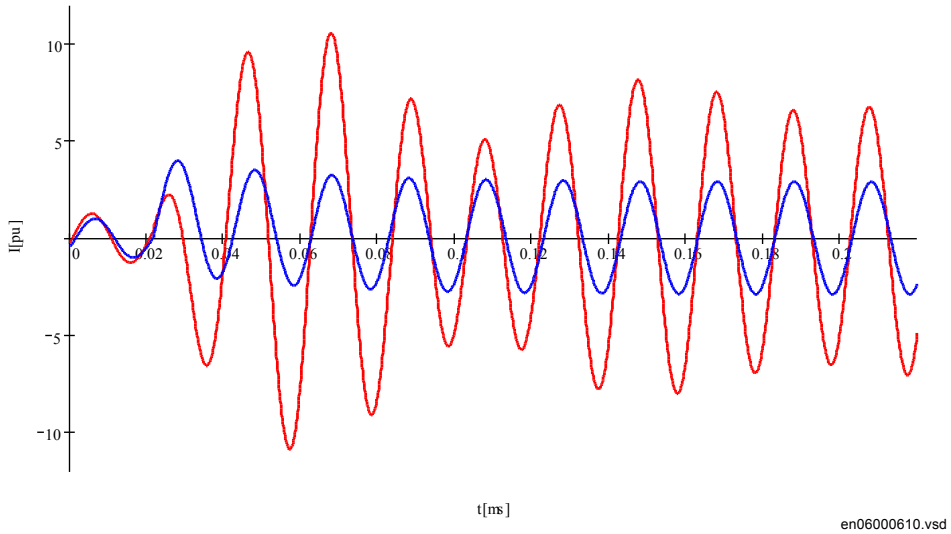

Figure 99: Short circuit currents for the fault at the end of 500 km long 500 kV line without and with SC

Location of instrument transformers

Location of instrument transformers relative to the line end series capacitors plays an important role regarding the dependability and security of a complete protection scheme. It is on the other hand necessary to point out the particular dependence of those protection schemes, which need for their operation information on voltage in IED point.

Protection schemes with their operating principle depending on current measurement only, like line current differential protection are relatively independent on CT location. Figure 100 shows schematically the possible locations of instrument transformers related to the position of line-end series capacitor.

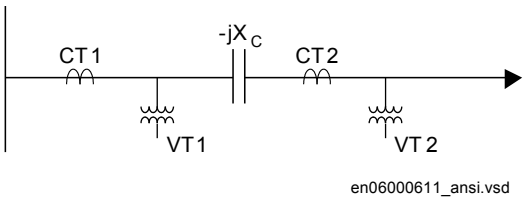

Figure 100: Possible positions of instrument transformers relative to line end series capacitor

Bus side instrument transformers

CT1 and VT1 on figure 100 represent the case with bus side instrument transformers. The protection devices are in this case exposed to possible voltage and current inversion for line faults, which decreases the required dependability. In addition to this may series capacitor cause negative apparent impedance to distance IEDs on protected and adjacent lines as well for close-in line faults (see also figure 102 LOC=0%), which requires special design of distance measuring elements to cope with such phenomena. The advantage of such installation is that the protection zone covers also the series capacitor as a part of protected power line, so that line protection will detect and cleared also parallel faults on series capacitor.

Line side instrument transformers

CT2 and VT2 on figure 100 represent the case with line side instrument transformers. The protective devices will not be exposed to voltage and current inversion for faults on the protected line, which increases the dependability. Distance protection zone 1 may be active in most applications, which is not the case when the bus side instrument transformers are used.

Distance IEDs are exposed especially to voltage inversion for close-in reverse faults, which decreases the security. The effect of negative apparent reactance must be studied seriously in case of reverse directed distance protection zones used by distance IEDs for teleprotection schemes. Series capacitors located between the voltage instruments transformers and the buses reduce the apparent zero sequence source impedance and may cause voltage as well as current inversion in zero sequence equivalent networks for line faults. It is for this reason absolutely necessary to study the possible effect on operation of zero sequence directional ground-fault overcurrent protection before its installation.

Dual side instrument transformers

Installations with line side CT2 and bus side VT1 are not very common. More common are installations with line side VT2 and bus side CT1. They appear as de facto installations also in switchyards with double-bus double-breaker and breaker-and-a-half arrangement. The advantage of such schemes is that the unit protections cover also for shunt faults in series capacitors and at the same time the voltage inversion does not appear for faults on the protected line.

Many installations with line-end series capacitors have available voltage instrument transformers on both sides. In such case it is recommended to use the VTs for each particular protection function to best suit its specific characteristics and expectations on dependability and security. The line side VT can for example be used by the distance protection and the bus side VT by the directional residual OC ground fault protection.

Apparent impedances and MOV influence

Series capacitors reduce due to their character the apparent impedance measured by distance IEDs on protected power lines. Figure 101 presents typical locations of

capacitor banks on power lines together with corresponding compensation degrees. Distance IED near the feeding bus will see in different cases fault on remote end bus depending on type of overvoltage protection used on capacitor bank (spark gap or MOV) and SC location on protected power line.

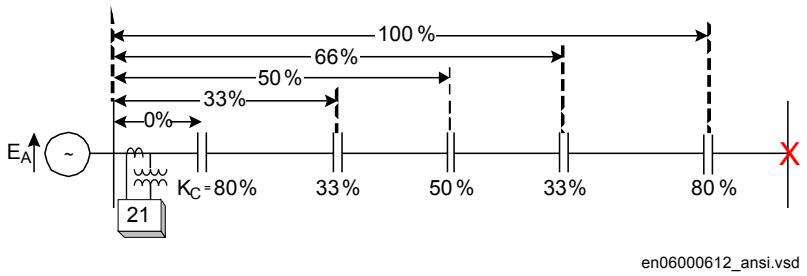

Figure 101: Typical locations of capacitor banks on series compensated line

Implementation of spark gaps for capacitor overvoltage protection makes the picture relatively simple, because they either flash over or not. The apparent impedance corresponds to the impedance of non-compensated line, as shown in figure 102 case K_C = 0%.

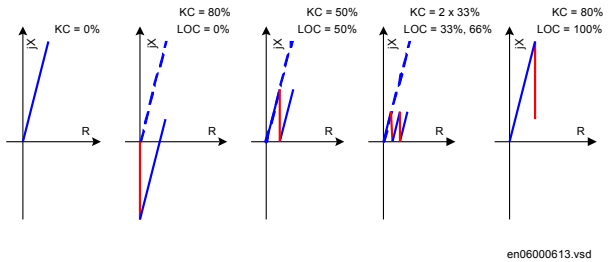

Figure 102: Apparent impedances seen by distance IED for different SC locations and spark gaps used for overvoltage protection

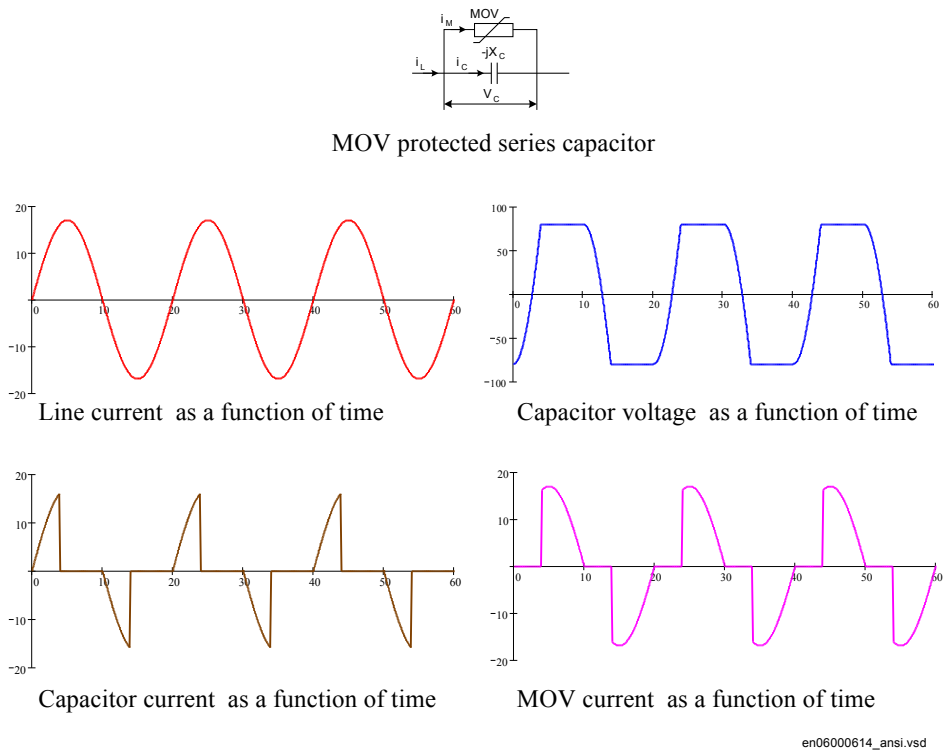

Figure 103: MOV protected capacitor with examples of capacitor voltage and corresponding currents

The impedance apparent to distance IED is always reduced for the amount of capacitive reactance included between the fault and IED point, when the spark gap does not flash over, as presented for typical cases in figure 102. Here it is necessary to distinguish between two typical cases:

- Series capacitor only reduces the apparent impedance, but it does not cause wrong directional measurement. Such cases are presented in figure 102 for 50% compensation at 50% of line length and 33% compensation located on 33% and 66% of line length. The remote end compensation has the same effect.
- The voltage inversion occurs in cases when the capacitor reactance between the IED point and fault appears bigger than the corresponding line reactance, Figure 23, 80% compensation at local end. A voltage inversion occurs in IED point and the distance IED will see wrong direction towards the fault, if no special measures have been introduced in its design.

The situation differs when metal oxide varistors (MOV) are used for capacitor overvoltage protection. MOVs conduct current, for the difference of spark gaps, only when the instantaneous voltage drop over the capacitor becomes higher than the protective voltage level in each half-cycle separately, see figure 103.

Extensive studies at Bonneville Power Administration in USA (*ref. Goldsworthy, D,L "A Linearized Model for MOV-Protected series capacitors" Paper 86SM357–8 IEEE/ PES summer meeting in Mexico City July 1986*) have resulted in construction of a non-linear equivalent circuit with series connected capacitor and resistor. Their value depends on complete line (fault) current and protection factor k_p. The later is defined by equation 80.

$$k_p = \frac{V_{MOV}}{U_{NC}}$$

(Equation 80)

Where

U_{MOV} is the maximum instantaneous voltage expected between the capacitor immediately before the MOV has conducted or during operation of the MOV, divaded by √2

U_{NC} is the rated voltage in RMS of the series capacitor

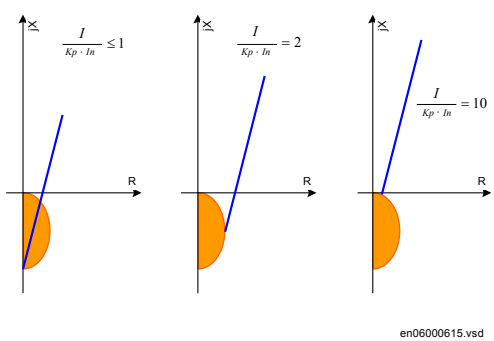

Figure 104: Equivalent impedance of MOV protected capacitor in dependence of protection factor K_P

Figure 104 presents three typical cases for series capacitor located at line end (case LOC=0% in figure 102).

- Series capacitor prevails the scheme as long as the line current remains lower or equal to its protective current level ($I \leq k_p \cdot I_{NC}$). Line apparent impedance is in this case reduced for the complete reactance of a series capacitor.

- 50% of capacitor reactance appears in series with resistance, which corresponds to approximately 36% of capacitor reactance when the line current equals two times the protective current level ($I \leq 2 \cdot k_p \cdot I_{NC}$). This information has high importance for setting of distance protection IED reach in resistive direction, for phase to ground fault measurement as well as for phase to phase measurement.

- Series capacitor becomes nearly completely bridged by MOV when the line current becomes higher than 10-times the protective current level ($I \leq 10 \cdot k_p \cdot I_{NC}$).

7.1.2.10 Impact of series compensation on protective IED of adjacent lines

Voltage inversion is not characteristic for the buses and IED points closest to the series compensated line only. It can spread also deeper into the network and this way influences the selection of protection devices (mostly distance IEDs) on remote ends of lines adjacent to the series compensated circuit, and sometimes even deeper in the network.

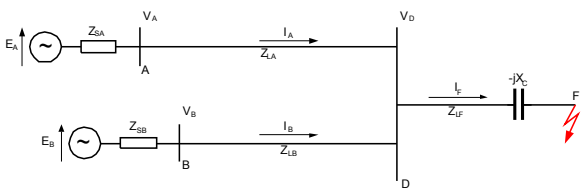

en06000616_ansi.vsd

Figure 105: Voltage inversion in series compensated network due to fault current infeed

Voltage at the B bus (as shown in figure 105) is calculated for the loss-less system according to the equation below.

$$V_B = V_D + I_B \cdot jX_{LB} = \left(I_A + I_B\right) \cdot j\left(X_{LF} - X_C\right) + I_B \cdot jX_{LB}$$

(Equation 81)

Further development of equation 81 gives the following expressions:

$$V_B = jI_B \cdot \left[X_{LB} + \left(1 + \frac{I_A}{I_B}\right) \cdot \left(X_{LF} - X_C\right)\right]$$

(Equation 82)

$$X_C\left(V_B = 0\right) = \frac{X_{LB}}{1 + \frac{I_A}{I_B}} + X_{LF}$$

(Equation 83)

Equation 82 indicates the fact that the infeed current I_A increases the apparent value of capacitive reactance in system: bigger the infeed of fault current, bigger the apparent series capacitor in a complete series compensated network. It is possible to say that

equation 83 indicates the deepness of the network to which it will feel the influence of series compensation through the effect of voltage inversion.

It is also obvious that the position of series capacitor on compensated line influences in great extent the deepness of voltage inversion in adjacent system. Line impedance X_{LF} between D bus and the fault becomes equal to zero, if the capacitor is installed near the bus and the fault appears just behind the capacitor. This may cause the phenomenon of voltage inversion to be expanded very deep into the adjacent network, especially if on one hand the compensated line is very long with high degree of compensation, and the adjacent lines are, on the other hand, relatively short.

Extensive system studies are necessary before final decision is made on implementation and location of series capacitors in network. It requires to correctly estimate their influence on performances of (especially) existing distance IEDs. It is possible that the costs for number of protective devices, which should be replaced by more appropriate ones due to the effect of applied series compensation, influences the future position of series capacitors in power network.

Possibilities for voltage inversion at remote buses should not be studied for short circuits with zero fault resistance only. It is necessary to consider cases with higher fault resistances, for which spark gaps or MOVs on series capacitors will not conduct at all. At the same time this kind of investigation must consider also the maximum sensitivity and possible resistive reach of distance protection devices, which on the other hand simplifies the problem.

Application of MOVs as non-linear elements for capacitor overvoltage protection makes simple calculations often impossible. Different kinds of steady-state network simulations are in such cases unavoidable.

7.1.2.11 Distance protection

Distance protection due to its basic characteristics, is the most used protection principle on series compensated and adjacent lines worldwide. It has at the same time caused a lot of challenges to protection society, especially when it comes to directional measurement and transient overreach.

Distance IED in fact does not measure impedance or quotient between line current and voltage. Quantity 1= Operating quantity - Restraing quantity Quantity 2= Polarizing quantity. Typically Operating quantity is the replica impedance drop. Restraining quantity is the system voltage Polarizing quantity shapes the characteristics in different way and is not discussed here.

Distance IEDs comprise in their replica impedance only the replicas of line inductance and resistance, but they do not comprise any replica of series capacitor on the protected line and its protection circuits (spark gap and or MOV). This way they form wrong picture of the protected line and all “solutions” related to distance protection of series

compensated and adjacent lines are concentrated on finding some parallel ways, which may help eliminating the basic reason for wrong measurement. The most known of them are decrease of the reach due to presence of series capacitor, which apparently decreases the line reactance, and introduction of permanent memory voltage in directional measurement.

Series compensated and adjacent lines are often the more important links in a transmission networks and delayed fault clearance is undesirable. This makes it necessary to install distance protection in combination with telecommunication. The most common is distance protection in Permissive Overreaching Transfer Trip mode (POTT).

Underreaching and overreaching schemes

It is a basic rule that the underreaching distance protection zone should under no circumstances overreach for the fault at the remote end bus, and the overreaching zone should always, under all system conditions, cover the same fault. In order to obtain section selectivity, the first distance (underreaching) protection zone must be set to a reach less than the reactance of the compensated line in accordance with figure 106.

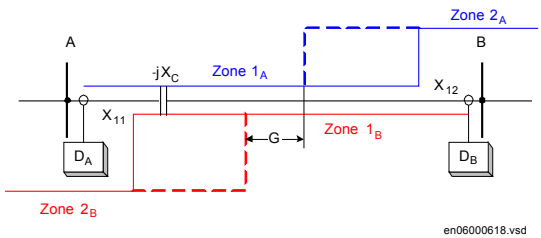

Figure 106: Underreaching (Zone 1) and overreaching (Zone 2) on series compensated line

The underreaching zone will have reduced reach in cases of bypassed series capacitor, as shown in the dashed line in figure 106. The overreaching zone (Zone 2) can this way cover bigger portion of the protected line, but must always cover with certain margin the remote end bus. Distance protection Zone 1 is often set to

$$X_{Z1} = K_S \cdot \left(X_{11} + X_{12} - X_C \right)$$

(Equation 84)

Here K_S is a safety factor, presented graphically in figure 107, which covers for possible overreaching due to low frequency (sub-harmonic) oscillations. Here it should be noted separately that compensation degree K_C in figure 107 relates to total system reactance, inclusive line and source impedance reactance. The same setting applies regardless MOV or spark gaps are used for capacitor overvoltage protection.

Equation 84 is applicable for the case when the VTs are located on the bus side of series capacitor. It is possible to remove X_C from the equation in cases of VTs installed in line side, but it is still necessary to consider the safety factor K_S .

If the capacitor is out of service or bypassed, the reach with these settings can be less than 50% of protected line dependent on compensation degree and there will be a section, G in figure 106, of the power line where no tripping occurs from either end.

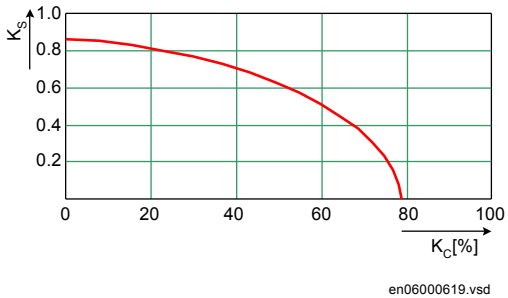

Figure 107: Underreaching safety factor K_S in dependence on system compensation degree K_C

For that reason permissive underreaching schemes can hardly be used as a main protection. Permissive overreaching distance protection or some kind of directional or unit protection must be used.

The overreach must be of an order so it overreaches when the capacitor is bypassed or out of service. Figure 108 shows the permissive zones. The first underreaching zone can be kept in the total protection but it only has the feature of a back-up protection for close up faults. The overreach is usually of the same order as the permissive zone. When the capacitor is in operation the permissive zone will have a very high degree of overreach which can be considered as a disadvantage from a security point of view.

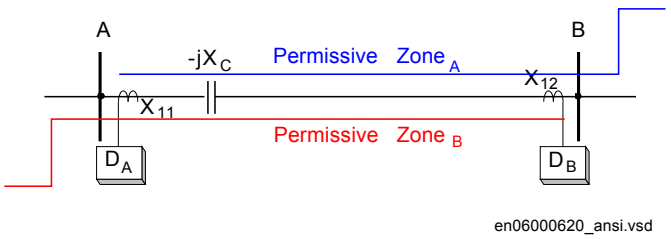

Figure 108: Permissive overreach distance protection scheme

Negative IED impedance, positive fault current (voltage inversion)

Assume in equation 85

$$X_{11} < X_C < X_S + X_{11}$$

(Equation 85)

and in figure 109

a three phase fault occurs beyond the capacitor. The resultant IED impedance seen from the D_B IED location to the fault may become negative (voltage inversion) until the spark gap has flashed.

Distance protections of adjacent power lines shown in figure 109 are influenced by this negative impedance. If the intermediate infeed of short circuit power by other lines is taken into consideration, the negative voltage drop on X_C is amplified and a protection far away from the faulty line can maloperate by its instantaneous operating distance zone, if no precaution is taken. Impedances seen by distance IEDs on adjacent power lines are presented by equations 86 to 89.

$$I = I_1 + I_2 + I_3$$

(Equation 86)

$$X_{DA1} = X_{A1} + \frac{\bar{I}_F}{\bar{I}_{A1}} \cdot \left(X_C - X_{11}\right)$$

(Equation 87)

$$X_{DA2} = X_{A2} + \frac{\bar{I}_F}{\bar{I}_{A2}} \cdot \left(X_C - X_{11}\right)$$

(Equation 88)

$$X_{DA3} = X_{A3} + \frac{\bar{I}_F}{\bar{I}_{A3}} \cdot \left(X_C - X_{11}\right)$$

(Equation 89)

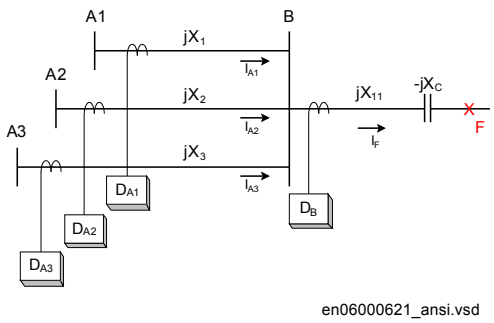

Figure 109: Distance IED on adjacent power lines are influenced by the negative impedance

Normally the first zone of this protection must be delayed until the gap flashing has taken place. If the delay is not acceptable, some directional comparison must also be added to the protection of all adjacent power lines. As stated above, a good protection system must be able to operate correctly both before and after gap flashing occurs. Distance protection can be used, but careful studies must be made for each individual case. The rationale described applies to both conventional spark gap and MOV protected capacitors.

Special attention should be paid to selection of distance protection on shorter adjacent power lines in cases of series capacitors located at the line end. In such case the reactance of a short adjacent line may be lower than the capacitor reactance and voltage inversion phenomenon may occur also on remote end of adjacent lines. Distance protection of such line must have built-in functionality which applies normally to protection of series compensated lines.

It usually takes a bit of a time before the spark gap flashes, and sometimes the fault current will be of such a magnitude that there will not be any flashover and the negative impedance will be sustained. If equation 90

$$X_{11} < X_C < X_S + X_{11}$$

(Equation 90)

in figure 110, the fault current will have the same direction as when the capacitor is bypassed. So, the directional measurement is correct but the impedance measured is negative and if the characteristic crosses the origin shown in figure 110 the IED cannot operate. However, if there is a memory circuit designed so it covers the negative impedance, a three phase fault can be successfully cleared by the distance protection. As soon as the spark gap has flashed the situation for protection will be as for an

ordinary fault. However, a good protection system should be able to operate correctly before and after gap flashing occurs.

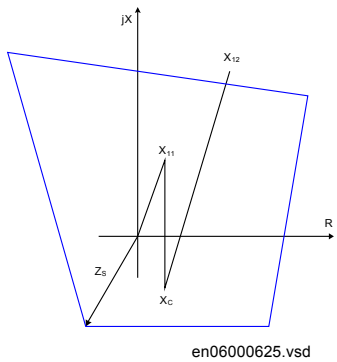

Figure 110: Cross-polarized quadrilateral characteristic

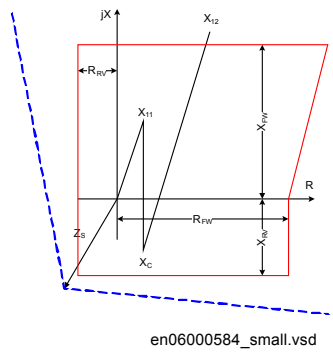

Figure 111: Quadrilateral characteristic with separate impedance and directional measurement

If the distance protection is equipped with a ground-fault measuring unit, the negative impedance occurs when

$$\left|3 \cdot X_C\right| > \left|2 \cdot X_{1\_11} + X_{0\_11}\right|$$

(Equation 91)

Cross-polarized distance protection (either with mho or quadrilateral characteristic) will normally handle ground-faults satisfactory if the negative impedance occurs inside the characteristic. The operating area for negative impedance depends upon the magnitude of the source impedance and calculations must be made on a case by case basis, as shown in figure 110. Distance IEDs with separate impedance and directional measurement offer additional setting and operational flexibility when it comes to measurement of negative apparent impedance (as shown in figure 111).

Negative IED impedance, negative fault current (current inversion)

If equation 92

$$X_C > X_S + X_{11}$$

(Equation 92)

in figure 96 and a fault occurs behind the capacitor, the resultant reactance becomes negative and the fault current will have an opposite direction compared with fault current in a power line without a capacitor (current inversion). The negative direction of the fault current will persist until the spark gap has flashed. Sometimes there will be no flashover at all, because the fault current is less than the setting value of the spark gap. The negative fault current will cause a high voltage on the network. The situation will be the same even if a MOV is used. However, depending upon the setting of the MOV, the fault current will have a resistive component.

The problems described here are accentuated with a three phase or phase-to-phase fault, but the negative fault current can also exist for a single-phase fault. The condition for a negative current in case of an ground fault can be written as follows:

$$\left|3 \cdot X_C\right| > \left|2 \cdot X_{1\_L1} + X_{0\_L1} + 2 \cdot X_{0\_S} + X_{1\_S}\right|$$

(Equation 93)

All designations relates to figure 96. A good protection system must be able to cope with both positive and negative direction of the fault current, if such conditions can occur. A distance protection cannot operate for negative fault current. The directional element gives the wrong direction. Therefore, if a problem with negative fault current exists, distance protection is not a suitable solution. In practice, negative fault current seldom occurs. In normal network configurations the gaps will flash in this case.

Double circuit, parallel operating series compensated lines

Two parallel power lines running in electrically close vicinity to each other and ending at the same busbar at both ends (as shown in figure 112) causes some challenges for distance protection because of the mutual impedance in the zero sequence system. The current reversal phenomenon also raises problems from the protection point of view, particularly when the power lines are short and when permissive overreach schemes are used.

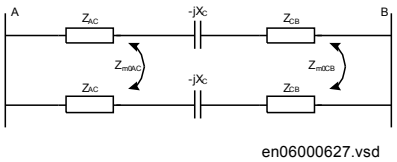

Figure 112: Double circuit, parallel operating line

Zero sequence mutual impedance Z_{m0} cannot significantly influence the operation of distance protection as long as both circuits are operating in parallel and all precautions related to settings of distance protection on series compensated line have been considered. Influence of disconnected parallel circuit, which is grounded at both ends, on operation of distance protection on operating circuit is known.

Series compensation additionally exaggerates the effect of zero sequence mutual impedance between two circuits, see figure 113. It presents a zero sequence equivalent circuit for a fault at B bus of a double circuit line with one circuit disconnected and grounded at both IEDs. The effect of zero sequence mutual impedance on possible overreaching of distance IEDs at A bus is increased compared to non compensated operation, because series capacitor does not compensate for this reactance. The reach of underreaching distance protection zone 1 for phase-to-ground measuring loops must further be decreased for such operating conditions.

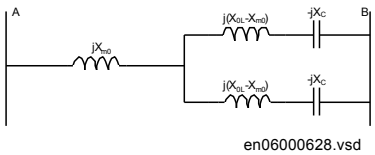

Figure 113: Zero sequence equivalent circuit of a series compensated double circuit line with one circuit disconnected and grounded at both IEDs

Zero sequence mutual impedance may disturb also correct operation of distance protection for external evolving faults, when one circuit has already been disconnected in one phase and runs non-symmetrical during dead time of single pole autoreclosing cycle. All such operating conditions must carefully be studied in advance and simulated by dynamic simulations in order to fine tune settings of distance IEDs.

If the fault occurs in point F of the parallel operating circuits, as presented in figure 114, than also one distance IED (operating in POTT teleprotection scheme) on parallel, healthy circuit will send a carrier signal CSAB to the remote line end, where this signal will be received as a carrier receive signal CRBB.

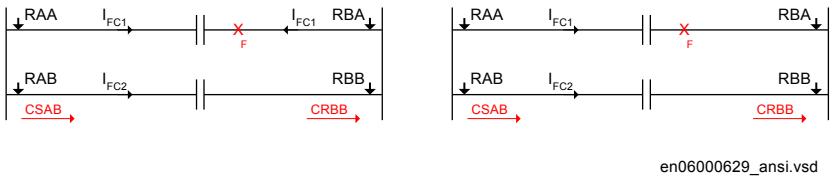

Figure 114: Current reversal phenomenon on parallel operating circuits

It is possible to expect faster IED operation and breaker opening at the bus closer to fault, which will reverse the current direction in healthy circuit. Distance IED RBB will suddenly detect fault in forward direction and, if CRBB signal is still present due to long reset time of IED RAB and especially telecommunication equipment, trip its related circuit breaker, since all conditions for POTT have been fulfilled. Zero sequence mutual impedance will additionally influence this process, since it increases the magnitude of fault current in healthy circuit after the opening of first circuit breaker. The so called current reversal phenomenon may cause unwanted operation of

protection on healthy circuit and this way endangers even more the complete system stability.

To avoid the unwanted tripping, some manufacturers provide a feature in their distance protection which detects that the fault current has changed in direction and temporarily blocks distance protection. Another method employed is to temporarily block the signals received at the healthy line as soon as the parallel faulty line protection initiates tripping. The second mentioned method has an advantage in that not the whole protection is blocked for the short period. The disadvantage is that a local communication is needed between two protection devices in the neighboring bays of the same substation.

Distance protection used on series compensated lines must have a high overreach to cover the whole transmission line also when the capacitors are bypassed or out of service. When the capacitors are in service, the overreach will increase tremendously and the whole system will be very sensitive for false teleprotection signals. Current reversal difficulties will be accentuated because the ratio of mutual impedance against self-impedance will be much higher than for a non-compensated line.

If non-unit protection is to be used in a directional comparison mode, schemes based on negative sequence quantities offer the advantage that they are insensitive to mutual coupling. However, they can only be used for phase-to-ground and phase-to-phase faults. For three-phase faults an additional protection must be provided.

7.1.3 Setting guidelines

7.1.3.1 General

The settings for the distance protection function are done in primary values. The instrument transformer ratio that has been set for the analog input card is used to automatically convert the measured secondary input signals to primary values used in the distance protection function.

The following basics should be considered, depending on application, when doing the setting calculations:

- Errors introduced by current and voltage instrument transformers, particularly under transient conditions.
- Inaccuracies in the line zero-sequence impedance data, and their effect on the calculated value of the ground-return compensation factor.
- The effect of infeed between the IED and the fault location, including the influence of different Z0/Z1 ratios of the various sources.

- The phase impedance of non transposed lines is not identical for all fault loops. The difference between the impedances for different phase-to-ground loops can be as large as 5-10% of the total line impedance.
- The effect of a load transfer between the IEDs of the protected fault resistance is considerable, the effect must be recognized.
- Zero-sequence mutual coupling from parallel lines.

7.1.3.2 Setting of zone1

The different errors mentioned earlier usually require a limitation of the underreaching zone (normally zone 1) to 75 - 90% of the protected line.

In case of parallel lines, consider the influence of the mutual coupling according to section "Parallel line application with mutual coupling" and select the case(s) that are valid in your application. We recommend to compensate setting for the cases when the parallel line is in operation, out of service and not grounded and out of service and grounded in both ends. The setting of ground fault reach should be selected to be <85% also when parallel line is out of service and grounded at both ends (worst case).

7.1.3.3 Setting of overreaching zone

The first overreaching zone (normally zone2) must detect faults on the whole protected line. Considering the different errors that might influence the measurement in the same way as for zone1, it is necessary to increase the reach of the overreaching zone to at least 120% of the protected line. The zone2 reach can be even higher if the fault infeed from adjacent lines at remote end are considerable higher than the fault current at the IED location.

The setting must not exceed 80% of the following impedances:

- The impedance corresponding to the protected line, plus the first zone reach of the shortest adjacent line.
- The impedance corresponding to the protected line, plus the impedance of the maximum number of transformers operating in parallel on the bus at the remote end of the protected line.

If the requirements in the bullet—listed paragraphs above gives a zone2 reach less than 120%, the time delay of zone2 must be increased by approximately 200ms to avoid unwanted operation in cases when the telecommunication for the short adjacent line at remote end is down during faults. The zone2 must not be reduced below 120% of the protected line section. The whole line must be covered under all conditions.

The requirement that the zone 2 shall not reach more than 80% of the shortest adjacent line at remote end is highlighted with a simple example below.

If a fault occurs at point F (as shown in figure 115, also for the explanation of all abbreviations used), the IED at point A senses the impedance:

$$\bar{Z}_{AF} = \frac{\bar{V}_A}{\bar{I}_A} = \bar{Z}_{AC} + \frac{\bar{I}_A + \bar{I}_C}{\bar{I}_A} \cdot \bar{Z}_{CF} + \frac{\bar{I}_A + \bar{I}_C + \bar{I}_B}{\bar{I}_A} \cdot R_F = \bar{Z}_{AC} + \left(1 + \frac{\bar{I}_C}{\bar{I}_A}\right) \cdot \bar{Z}_{CF} + \left(1 + \frac{\bar{I}_C + \bar{I}_B}{\bar{I}_A}\right) \cdot R_F$$

(Equation 94)

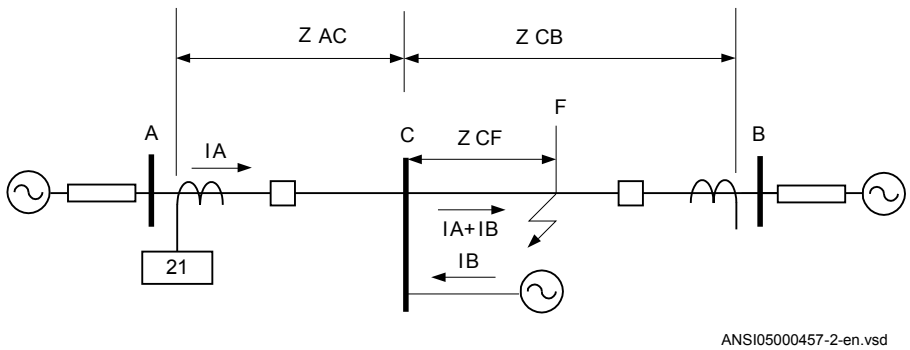

Figure 115:

7.1.3.4 Setting of reverse zone

The reverse zone is applicable for purposes of scheme communication logic, current reversal logic, weak-end-infeed logic, and so on. The same applies to the back-up protection of the bus bar or power transformers. It is necessary to secure, that it always covers the overreaching zone, used at the remote line IED for the telecommunication purposes.

Consider the possible enlarging factor that might exist due to fault infeed from adjacent lines. Equation 95 can be used to calculate the reach in reverse direction when the zone is used for blocking scheme, weak-end infeed and so on.

$$Zrev \geq 1.2 \cdot \left(ZL - Z2rem\right)$$

(Equation 95)

Where:

ZL is the protected line impedance

Z2rem is zone2 setting at remote end of protected line.

In some applications it might be necessary to consider the enlarging factor due to fault current infeed from adjacent lines in the reverse direction to obtain certain sensitivity.

7.1.3.5 Series compensated and adjacent lines

Directional control

The directional function (ZDSRDIR) which is able to cope with the condition at voltage reversal, shall be used in all IEDs with conventional distance protection (ZMCPDIS,ZMCAPDIS, 21). This function is necessary in the protection on compensated lines as well as all non-compensated lines connected to this busbar (adjacent lines). All protections that can be exposed to voltage reversal must have the special directional function, including the protections on busbar where the voltage can be reversed by series compensated lines not terminated to this busbar.

The directional function is controlled by faulty phase criteria. These criteria must identify all forward and reverse faults that can cause voltage reversal. Setting of the corresponding reach of the impedance measuring elements is separate for reactive and resistive reach and independent of each other for phase-to-ground and for phase-to-phase measurement.

It is also necessary to consider the minimum load impedance limiting conditions:

Setting of zone 1

A voltage reversal can cause an artificial internal fault (voltage zero) on faulty line as well as on the adjacent lines. This artificial fault always have a resistive component, this is however small and can mostly not be used to prevent tripping of a healthy adjacent line.

An independent tripping zone 1 facing a bus which can be exposed to voltage reversal have to be set with reduced reach with respect to this false fault. When the fault can move and pass the bus, the zone 1 in this station must be blocked. Protection further out in the net must be set with respect to this apparent fault as the protection at the bus.

Different settings of the reach for the zone (ZMCPDIS, 21) characteristic in forward and reverse direction makes it possible to optimize the settings in order to maximize dependability and security for independent zone1.

Due to the sub-harmonic oscillation swinging caused by the series capacitor at fault conditions the reach of the under-reaching zone 1 must be further reduced. Zone 1 can only be set with a percentage reach to the artificial fault according to the curve in 116

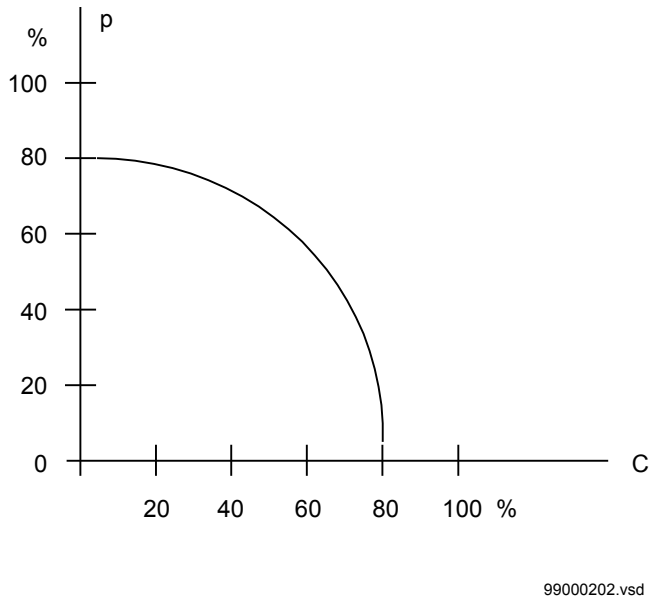

Figure 116: Reduced reach due to the expected sub-harmonic oscillations at different degrees of compensation

$$c = \text{degree of compensation}\left(\frac{X_c}{X_l}\right)$$

(Equation 96)

X_c is the reactance of the series capacitor

p is the maximum allowable reach for an under-reaching zone with respect to the sub-harmonic swinging related to the resulting fundamental frequency reactance the zone is not allowed to over-reach.

The degree of compensation C in figure 116 has to be interpreted as the relation between series capacitor reactance X_C and the total positive sequence reactance X1 to the driving source to the fault. If only the line reactance is used the degree of compensation will be too high and the zone 1 reach unnecessary reduced. The highest degree of compensation will occur at three phase fault and therefore the calculation need only to be performed for three phase faults.

The compensation degree in ground return path is different than in phases. It is for this reason possible to calculate a compensation degree separately for the phase-to-phase and three-phase faults on one side and for the single phase-to-ground fault loops on the other side. Different settings of the reach for the ph-ph faults and ph-G loops makes it possible to minimise the necessary decrease of the reach for different types of faults.

Reactive Reach

Compensated lines with the capacitor into the zone 1 reach :

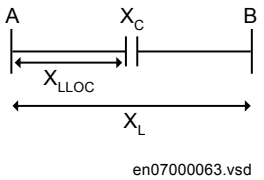

Figure 117: Simplified single line diagram of series capacitor located at X_{LLOC} ohm from A station

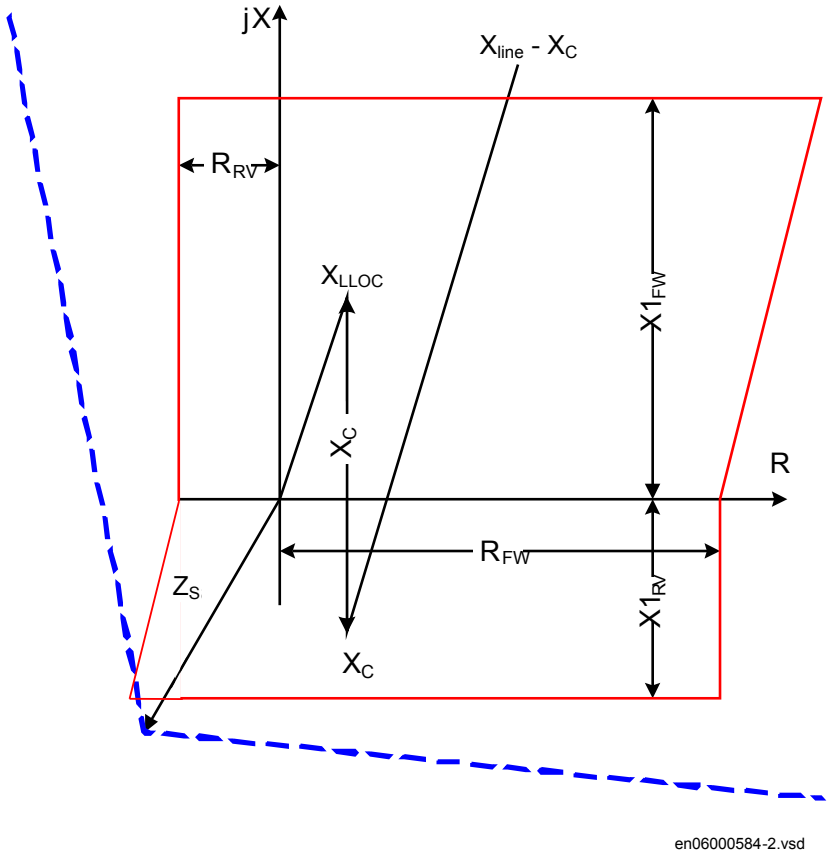

Figure 118: Measured impedance at voltage inversion

Forward direction:

Where

X_{LLoc}	equals line reactance up to the series capacitor(in the picture approximate 33% of XLine)
X1	is set to (XLindex-XC) · p/100.
p	is defined according to figure 116
1,2	is safety factor for fast operation of Zone 1

Compensated line with the series capacitor not into the reach of zone 1. The setting is thus:

X1	is set to (XLine-XC) · p/100.

When the calculation of XFw gives a negative value the zone 1 must be permanently blocked.

For protection on non compensated lines facing series capacitor on next line. The setting is thus:

- *X1* is set to (XLine-XC · K) · p/100.
- *K* equals side infeed factor at next busbar.

When the calculation of XFw gives a negative value the zone 1 must be permanently blocked.

Fault resistance

The resistive reach is, for all affected applications, restricted by the set reactive reach and the load impedance and same conditions apply as for a non-compensated network.

However, special notice has to be taken during settings calculations due to the ZnO because 50% of capacitor reactance appears in series with resistance, which corresponds to approximately 36% of capacitor reactance when the line current equals two times the protective current level. This information has high importance for setting of distance protection IED reach in resistive direction, for phase to ground- fault measurement as well as, for phase-to-phase measurement.

Overreaching zone 2

In series compensated network where independent tripping zones will have reduced reach due to the negative reactance in the capacitor and the sub-harmonic swinging the tripping will to a high degree be achieved by the communication scheme.

With the reduced reach of the under-reaching zones not providing effective protection for all faults along the length of the line, it becomes essential to provide over-reaching schemes like permissive overreach transfer trip (POTT) or blocking scheme can be used.

Thus it is of great importance that the zone 2 can detect faults on the whole line both with the series capacitor in operation and when the capacitor is bridged (short circuited). It is supposed also in this case that the reactive reach for phase-to-phase and for phase-to-ground faults is the same. The X1Fw, for all lines affected by the series capacito, are set to:

- *X1* >= 1,5 · XLine

The safety factor of 1.5 appears due to speed requirements and possible under reaching caused by the sub harmonic oscillations.

The increased reach related to the one used in non compensated system is recommended for all protections in the vicinity of series capacitors to compensate for delay in the operation caused by the sub harmonic swinging.

Settings of the resistive reaches are limited according to the minimum load impedance.

Reverse zone

The reverse zone that is normally used in the communication schemes for functions like fault current reversal logic, weak-in-feed logic or issuing carrier send in blocking scheme must detect all faults in the reverse direction which is detected in the opposite IED by the overreaching zone 2. The maximum reach for the protection in the opposite IED can be achieved with the series capacitor in operation.

The reactive reach can be set according to the following formula:
$X1=1.3 \cdot X1_{2Rem}-0.5(X1_L-X_C)$

Settings of the resistive reaches are according to the minimum load impedance:

Optional higher distance protection zones

When some additional distance protection zones (zone 4, for example) are used they must be set according to the influence of the series capacitor.

7.1.3.6 Setting of zones for parallel line application

Parallel line in service – Setting of zone1

With reference to section "Parallel line application with mutual coupling", the zone reach can be set to 85% of protected line.

Parallel line in service – setting of zone2

Overreaching zones (in general, zones 2 and 3) must overreach the protected circuit in all cases. The greatest reduction of a reach occurs in cases when both parallel circuits are in service with a single phase-to-ground fault located at the end of a protected line. The equivalent zero-sequence impedance circuit for this case is equal to the one in figure 75 in section "Parallel line in service".

The components of the zero-sequence impedance for the overreaching zones must be equal to at least:

$$R_{0E} = R_0 + R_{m0}$$

(Equation 97)

$$X_{0E} = X_0 + X_{m0}$$

(Equation 98)

Check the reduction of a reach for the overreaching zones due to the effect of the zero sequence mutual coupling. The reach is reduced for a factor:

$$K0 = 1 - \frac{Z0_m}{2 \cdot Z1 + Z0 + R_f}$$

(Equation 99)

If the denominator in equation 99 is called B and Z0m is simplified to X0m, then the real and imaginary part of the reach reduction factor for the overreaching zones can be written as:

$$\mathrm{Re}\left(\overline{K}0\right) = 1 - \frac{X0m \cdot \mathrm{Re}\left(B\right)}{\mathrm{Re}\left(B\right)^2 + \mathrm{Im}\left(B\right)^2}$$

(Equation 100)

$$\mathrm{Im}\left(\overline{K}0\right) = \frac{X0m \cdot \mathrm{Im}\left(B\right)}{\mathrm{Re}\left(B\right)^2 + \mathrm{Im}\left(B\right)^2}$$

(Equation 101)

Parallel line is out of service and grounded in both ends

Apply the same measures as in the case with a single set of setting parameters. This means that an underreaching zone must not overreach the end of a protected circuit for the single phase-to-ground-faults. Set the values of the corresponding zone (zero-sequence resistance and reactance) equal to:

$$R_{0E} = R_0 \cdot \left(1 + \frac{X_{m0}^2}{R_0^2 + X_0^2}\right)$$

(Equation 102)

$$X_{0E} = X_0 \cdot \left(1 - \frac{X_{m0}^2}{R_0^2 + X_0^2}\right)$$

(Equation 103)

7.1.3.7 Setting of reach in resistive direction

Set the resistive reach independently for each zone, and separately for phase-to-phase (*R1PP*), and phase-to-ground loop (*R1PG*) measurement.

Set separately the expected fault resistance for phase-to-phase faults (*R1PP*) and for the phase-to-ground faults (*RFPG*) for each zone. Set all remaining reach setting parameters independently of each other for each distance zone.

The final reach in resistive direction for phase-to-ground fault loop measurement automatically follows the values of the line-positive and zero-sequence resistance, and at the end of the protected zone is equal to equation 104.

$$R = \frac{1}{3}(2 \cdot R1PG + R0PG) + RFPG$$

(Equation 104)

$$\varphi_{loop} = \arctan\left[\frac{2 \cdot X1PE + X0}{2 \cdot R1PE + R0}\right]$$

(Equation 105)

Setting of the resistive reach for the underreaching zone1 must follow the following condition:

$$RFPG \leq 4.5 \cdot X1PG$$

(Equation 106)

The fault resistance for phase-to-phase faults is normally quite low, compared to the fault resistance for phase-to-ground faults. Limit the setting of the zone1 reach in resistive direction for phase-to-phase loop measurement to:

$$RFPP \leq 3 \cdot X1$$

(Equation 107)

7.1.3.8 Load impedance limitation, without load encroachment function

The following instructions is valid when the load encroachment function is not activated, which is done by setting the parameter *Rld* for the Phase Selector to its upper limit. If the load encroachment function is to be used for all or some of the measuring zones, the load limitation for those zones according to this chapter can be omitted. Check the maximum permissible resistive reach for any zone to ensure that there is a sufficient setting margin between the IED boundary and the minimum load impedance. The minimum load impedance (Ω/phase) is calculated as:

$$Z_{load\,min} = \frac{V^2}{S}$$

(Equation 108)

Where:

V is the minimum phase-to-phase voltage in kV

S is the maximum apparent power in MVA.

The load impedance [Ω/phase] is a function of the minimum operation voltage and the maximum load current:

$$Z_{load} = \frac{V_{min}}{\sqrt{3} \cdot I_{max}}$$

(Equation 109)

Minimum voltage Vmin and maximum current Imax are related to the same operating conditions. Minimum load impedance occurs normally under emergency conditions.

Because a safety margin is required to avoid load encroachment under three-phase conditions and to guarantee correct healthy phase IED operation under combined heavy three-phase load and ground faults, consider both: phase-to-phase and phase-to-ground fault operating characteristics.

To avoid load encroachment for the phase-to-ground measuring elements, the set resistive reach of any distance protection zone must be less than 80% of the minimum load impedance.

$$RFPG \leq 0.8 \cdot Z_{load}$$

(Equation 110)

This equation is applicable only when the loop characteristic angle for the single phase-to-ground faults is more than three times as large as the maximum expected load-impedance angle. More accurate calculations are necessary according to the equation below:

$$RFPG \le 0.8 \cdot Z_{load\,\min} \cdot \left[\cos\partial - \frac{2 \cdot R1 + R0}{2 \cdot X1 + X0} \cdot \sin\partial \right]$$

(Equation 111)

Where:

ϑ is a maximum load-impedance angle, related to the minimum load impedance conditions.

To avoid load encroachment for the phase-to-phase measuring elements, the set resistive reach of any distance protection zone must be less than 160% of the minimum load impedance.

$$RFPP \le 1.6 \cdot Z_{load}$$

(Equation 112)

Equation 112 is applicable only when the loop characteristic angle for the phase-to-phase faults is more than three times as large as the maximum expected load-impedance angle. More accurate calculations are necessary according to equation 113.

$$RFPP \le 1.6 \cdot Z_{loadmin} \cdot \left[\cos\vartheta - \frac{R1PP}{X1PP} \cdot \sin\vartheta \right]$$

(Equation 113)

All this is applicable for all measuring zones when no power swing detection element is in the protection scheme. Use an additional safety margin of approximately 20% in cases when a power swing detection element is in the protection scheme, refer to the description of Power swing detection (ZMRPSB, 68) function.

7.1.3.9 Load impedance limitation, with load encroachment function activated

The parameters for load encroachment shaping of the characteristic are found in the description of the phase selection with load encroachment function, section "Setting guidelines". If the characteristic for the impedance measurement is shaped with the load encroachment algorithm, the parameter *RLdFw* and the corresponding load angle *ArgLd* must be set according to the minimum load impedance.

7.1.3.10 Setting of minimum operating currents

The operation of the distance function can be blocked if the magnitude of the currents is below the set value of the parameter *IMinPUPP* and *IMinPUPG*.

The default setting of *IMinPUPP* and *IMinPUPG* is 20% of *IBase* where *IBase* is the chosen base current for the analog input channels. The value has been proven in practice to be suitable in most of the applications. However, there might be applications where it is necessary to increase the sensitivity by reducing the minimum operating current down to 10% of IED base current. This happens especially in cases, when the IED serves as a remote back-up protection on series of very long transmission lines.

If the load current compensation is activated, there is an additional criteria *IMinOpIR* that will block the phase-ground loop if the 3I0<*IMinOpIR*. The default setting of *IMinOpIR* is 5% of the IED base current *IBase*.

The minimum operating fault current is automatically reduced to 75% of its set value, if the distance protection zone has been set for the operation in reverse direction.

7.1.3.11 Setting of timers for distance protection zones

The required time delays for different distance-protection zones are independent of each other. Distance protection zone1 can also have a time delay, if so required for selectivity reasons. One can set the time delays for all zones (basic and optional) in a range of 0 to 60 seconds. The tripping function of each particular zone can be inhibited by setting the corresponding *Operation* parameter to *Disabled*. Different time delays are possible for the ph-E (*tPG*) and for the ph-ph (*tPP*) measuring loops in each distance protection zone separately, to further increase the total flexibility of a distance protection.

7.2 Phase selection, quadrilateral characteristic with fixed angle FDPSPDIS (21)

7.2.1 Identification

7.2.1.1 Identification

Function description	IEC 61850 identification	IEC 60617 identification	ANSI/IEEE C37.2 device number
Phase selection with load encroachment, quadrilateral characteristic	FDPSPDIS	*Z<phs*	21

7.2.2 Application

The operation of transmission networks today is in many cases close to the stability limit. The ability to accurately and reliably classify the different types of fault, so that single pole tripping and autoreclosing can be used plays an important role in this matter. Phase selection with load encroachment function FDPSPDIS (21) is designed to accurately select the proper fault loop in the distance measuring function depending on the fault type.

The heavy load transfer that is common in many transmission networks may in some cases be in opposite to the wanted fault resistance coverage. Therefore, the function has a built in algorithm for load encroachment, which gives the possibility to enlarge the resistive setting of both the Phase selection with load encroachment and the measuring zones without interfering with the load.

A current-based phase selection is also included. The measuring elements continuously measure three phase currents and the residual current and, compare them with the set values.

The extensive output signals from FDPSPDIS (21) give also important information about faulty phase(s), which can be used for fault analysis.

7.2.3 Setting guidelines

The following setting guideline consider normal overhead lines applications where φloop and φline is greater than 60°.

7.2.3.1 Load encroachment characteristics

The phase selector must at least cover the overreaching zone 2 in order to achieve correct phase selection for utilizing single-phase autoreclosing for faults on the entire line. It is not necessary to cover all distance protection zones. A safety margin of at least 10% is recommended. In order to get operation from distance zones , the phase selection outputs PHSELZ or DLECND must be connected to input PHSEL on ZMQPDIS (21), distance measuring block.

For normal overhead lines, the angle for the loop impedance φ for phase-to-ground fault is defined according to equation 114.

$$\arctan \varphi = \frac{X1_L + XN}{R1_L + RN}$$

(Equation 114)

In some applications, for instance cable lines, the angle of the loop might be less than 60°. In these applications, the settings of fault resistance coverage in forward and reverse direction, *RFltFwdPG* and *RFltRevPG* for phase-to-ground faults and *RFltRevPP* and *RFltRevPP* for phase-to-phase faults have to be increased to avoid that FDPSPDIS (21) characteristic shall cut off some part of the zone characteristic. The necessary increased setting of the fault resistance coverage can be derived from trigonometric evaluation of the basic characteristic for respectively fault type.

Phase-to-ground fault in forward direction

With reference to figure 119, the following equations for the setting calculations can be obtained.

Index PHS in images and equations reference settings for Phase selection with load encroachment function FDPSPDIS (21) and index Zm reference settings for Distance protection function (ZMQPDIS, 21).

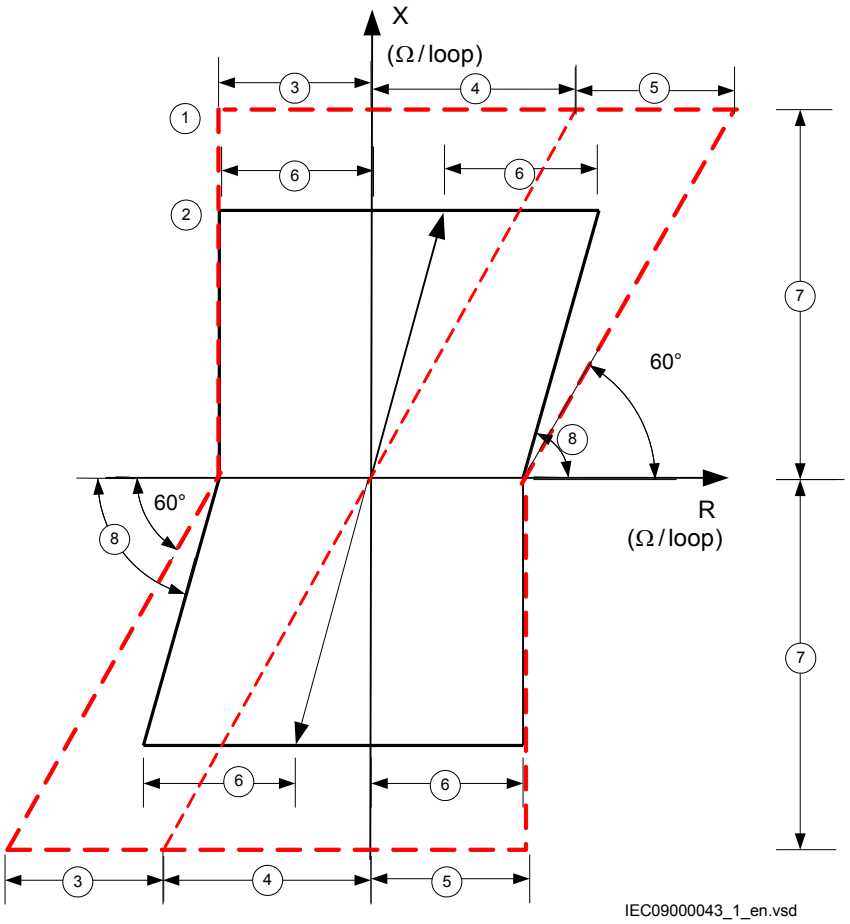

Figure 119: Relation between distance protection phase selection (FDPSPDIS) (21) and impedance zone (ZMQPDIS) (21) for phase-to-ground fault φloop>60° (setting parameters in italic)

1 FDPSPDIS (phase selection)(21) (red line)

2 ZMQPDIS (Impedance protection zone)(21)

3 $RFltRevPG_{PHS}$

4 $(X1_{PHS}$+XN)/tan(60°)

5 $RFltFwdPG_{PHS}$

6 $RFPG_{ZM}$

7 $X1_{PHS}$+XN

8 φloop

9 $X1_{ZM}$+XN

Reactive reach

The reactive reach in forward direction must as minimum be set to cover the measuring zone used in the Teleprotection schemes, mostly zone 2. Equation 115 and equation 116 gives the minimum recommended reactive reach.

$$X1_{PHS} \geq 1.44 \cdot X1_{Zm}$$

(Equation 115)

$$X0_{PHS} \geq 1.44 \cdot X0_{Zm}$$

(Equation 116)

where:

$X1_{Zm}$ is the reactive reach for the zone to be covered by FDPSPDIS (21), and the constant

1.44 is a safety margin

$X0_{Zm}$ is the zero-sequence reactive reach for the zone to be covered by FDPSPDIS (21)

The reactive reach in reverse direction is automatically set to the same reach as for forward direction. No additional setting is required.

Fault resistance reach

The resistive reach must cover *RFPG* for the overreaching zone to be covered, mostly zone 2. Consider the longest overreaching zone if correct fault selection is important in the application. Equation 117 gives the minimum recommended resistive reach.

$$RFltFwdPG_{min} \geq 1.1 \cdot RFPG_{zm}$$

(Equation 117)

where:

$RFPG_{Zm}$ is the setting *RFPG* for the longest overreaching zone to be covered by FDPSPDIS (21).

The security margin has to be increased to at least 1.2 in the case where φloop<60° to avoid that FDPSPDIS (21) characteristic shall cut off some part of the zone measurement characteristic.

Phase-to-ground fault in reverse direction

Reactive reach

The reactive reach in reverse direction is the same as for forward so no additional setting is required.

Resistive reach

The resistive reach in reverse direction must be set longer than the longest reverse zones. In blocking schemes it must be set longer than the overreaching zone at remote end that is used in the communication scheme. In equation 118 the index ZmRv references the specific zone to be coordinated to.

$$\mathrm{RFltREvPG} \geq 1.2 \cdot \mathrm{RFPG}_{\mathrm{ZmRv}}$$

(Equation 118)

Phase-to-phase fault in forward direction

Reactive reach

The reach in reactive direction is determined by phase-to-ground reach setting *X1*. No extra setting is required.

Resistive reach

In the same way as for phase-to-ground fault, the reach is automatically calculated based on setting *X1*. The reach will be X1/tan(60°) =X1/√(3).

Fault resistance reach

The fault resistance reaches in forward direction *RFItFwdPP*, must cover $RFPP_{Zm}$ with at least 25% margin. $RFPP_{Zm}$ is the setting of fault resistance for phase-to-phase fault for the longest overreaching zone to be covered by FDPSPDIS (21), see Figure 120. The minimum recommended reach can be calculated according to equation 119.

$$RFltFwdPP \geq 1.25 \cdot RFPP_{zm}$$

(Equation 119)

where:

$RFPP_{Zm}$ is the setting of the longest reach of the overreaching zones that must be covered by FDPSPDIS (21).

Equation 119 modified is applicable also for the *RFltRevPP* as follows:

$$RFlt\,\mathrm{Re}\,vPP_{\min} \geq 1.25 \cdot RFPP_{zmRv}$$

(Equation 120)

Equation 119 is also valid for three-phase fault. The proposed margin of 25% will cater for the risk of cut off of the zone measuring characteristic that might occur at three-phase fault when FDPSPDIS (21) characteristic angle is changed from 60 degrees to 90 degrees (rotated 30° anti-clock wise).

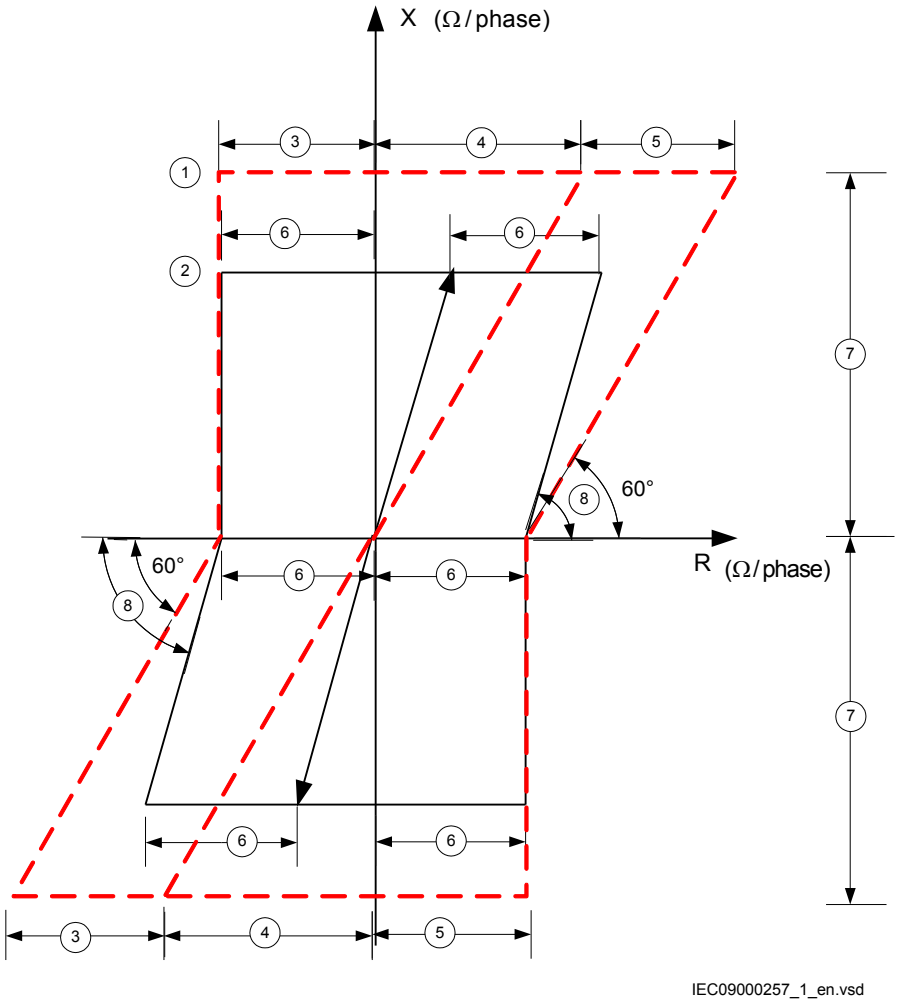

Figure 120: Relation between distance protection (ZMQPDIS) (21) and FDPSPDIS (21) characteristic for phase-to-phase fault for φline>60° (setting parameters in italic)

1 FDPSPDIS (phase selection)(21) (red line)

2 ZMQPDIS (Impedance protection zone) (21)

3 0.5 · *RFltRevPP* $_{PHS}$

4 $\frac{X1_{PHS}}{\tan(60°)}$

5 0.5 · *RFltFwdPP* $_{PHS}$

6 0.5 · $RFPP_{Zm}$

7 $X1_{PHS}$

8 $X1_{Zm}$

7.2.3.2 Resistive reach with load encroachment characteristic

The procedure for calculating the settings for the load encroachment consist basically to define the load angle *LdAngle*, the blinder *RLdFwd* in forward direction and blinder *RLdRev* in reverse direction, as shown in figure 121.

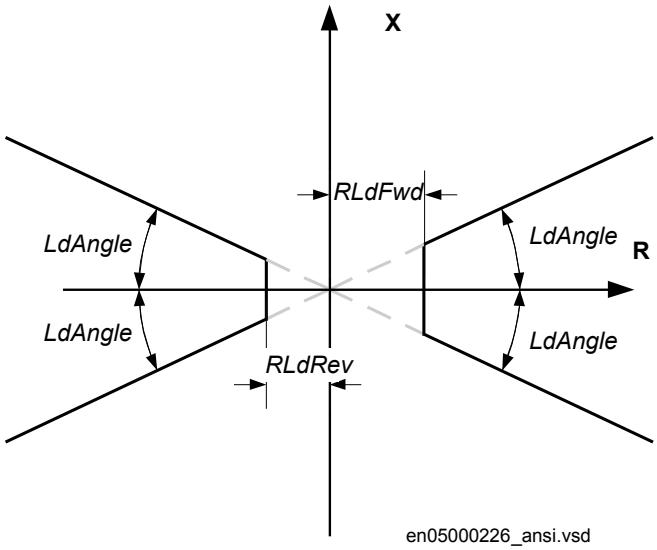

Figure 121: Load encroachment characteristic

The load angle *LdAngle* is the same in forward and reverse direction, so it could be suitable to begin to calculate the setting for that parameter. Set the parameter to the maximum possible load angle at maximum active load. A value bigger than 20° must be used.

The blinder in forward direction, *RLdFwd*, can be calculated according to equation 121.

$$RLdFwd = 0.8 \cdot \frac{V^2 \min}{P \exp \max}$$

where:

*P*exp max	is the maximum exporting active power
*V*min	is the minimum voltage for which the Pexp max occurs
0.8	is a security factor to ensure that the setting of *RLdFwd* can be lesser than the calculated minimal resistive load.

The resistive boundary *RLdRev* for load encroachment characteristic in reverse direction can be calculated in the same way as *RLdFwd*, but use maximum importing power that might occur instead of maximum exporting power and the relevant Vmin voltage for this condition.

7.2.3.3 Minimum operate currents

FDPSPDIS (21) has two current setting parameters which blocks the respective phase-to-ground loop and phase-to-phase loop if the RMS value of the phase current (ILn) and phase difference current (ILmILn) is below the settable threshold.

The threshold to activate the phase selector for phase-to-ground (*IMinPUPG*) is set to securely detect a single phase-to-ground fault at the furthest reach of the phase selection. It is recommended to set *IMinPUPP* to double value of *IMinPUPG*.

The threshold for opening the measuring loop for phase-to-ground fault (*3I0Enable_PG*) is set securely detect single line-to-ground fault at remote end on the protected line. It is recommended to set *3I0BLK_PP* to double value of *3I0Enable_PG*.

7.3 Distance measuring zones, quadrilateral characteristic ZMQPDIS (21), ZMQAPDIS (21), ZDRDIR (21D)

7.3.1 Identification

Function description	IEC 61850 identification	IEC 60617 identification	ANSI/IEEE C37.2 device number
Distance protection zone, quadrilateral characteristic (zone 1)	ZMQPDIS	Z<	21
Distance protection zone, quadrilateral characteristic (zone 2-5)	ZMQAPDIS	Z<	21
Directional impedance quadrilateral	ZDRDIR	Z<->	21D

7.3.2 Application

Sub-transmission networks are being extended and often become more and more complex, consisting of a high number of multi-circuit and/or multi terminal lines of very different lengths. These changes in the network will normally impose more stringent demands on the fault clearing equipment in order to maintain an unchanged or increased security level of the power system.

The distance protection function in the IED is designed to meet basic requirements for application on transmission and sub-transmission lines (solid grounded systems) although it also can be used on distribution levels.

7.3.2.1 System grounding

The type of system grounding plays an important role when designing the protection system. Some hints with respect to distance protection are highlighted below.

Solidly grounded networks

In solidly grounded systems, the transformer neutrals are connected directly to ground without any impedance between the transformer neutral and ground.

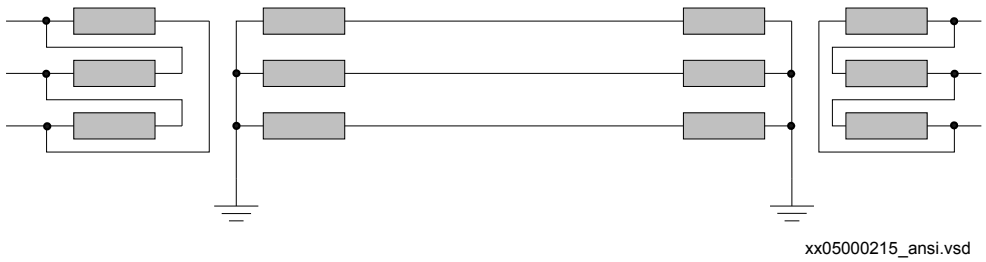

Figure 122: Solidly grounded network

The ground-fault current is as high or even higher than the short-circuit current. The series impedances determine the magnitude of the fault current. The shunt admittance has very limited influence on the ground-fault current. The shunt admittance may, however, have some marginal influence on the ground-fault current in networks with long transmission lines.

The ground-fault current at single phase-to-ground in phase A can be calculated as equation 122:

$$3I_0 = \frac{3 \cdot V_A}{Z_1 + Z_2 + Z_0 + 3Z_f} = \frac{V_A}{Z_1 + Z_N + Z_f}$$

(Equation 122)

Where:

VA	is the phase-to-ground voltage (kV) in the faulty phase before fault
Z_1	is the positive sequence impedance (Ω/phase)
Z_2	is the negative sequence impedance (Ω/phase), is considered to be equal to Z_1
Z_0	is the zero sequence impedance (Ω/phase)
Z_f	is the fault impedance (Ω), often resistive
Z_N	is the ground-return impedance defined as $(Z_0-Z_1)/3$

The voltage on the healthy phases is generally lower than 140% of the nominal phase-to-ground voltage. This corresponds to about 80% of the nominal phase-to-phase voltage.

The high zero-sequence current in solidly grounded networks makes it possible to use impedance measuring techniques to detect ground faults. However, distance protection has limited possibilities to detect high resistance faults and should therefore always be complemented with other protection function(s) that can carry out the fault clearance in those cases.

Effectively grounded networks

A network is defined as effectively grounded if the ground-fault factor f_e is less than 1.4. The ground-fault factor is defined according to equation 43.

$$f_e = \left| \frac{V_{max}}{V_{pn}} \right|$$

(Equation 123)

Where:

V_{max}	is the highest fundamental frequency voltage on one of the healthy phases at single phase-to-ground fault.
V_{pn}	is the phase-to-ground fundamental frequency voltage before fault.

Another definition for effectively grounded network is when the following relationships between the symmetrical components of the network impedances are valid, see equation 124 and equation 125.

$$X_0 < 3 \cdot X_1$$

(Equation 124)

$$R_0 \leq R_1$$

(Equation 125)

Where

R_0	is the zero sequence source resistance
X_0	is the zero sequence source reactance
R_1	is the positive sequence source resistance
X_1	is the positive sequence source reactance

The magnitude of the ground-fault current in effectively grounded networks is high enough for impedance measuring elements to detect ground faults. However, in the same way as for solidlygrounded networks, distance protection has limited possibilities to detect high resistance faults and should therefore always be complemented with other protection function(s) that can carry out the fault clearance in this case.

High impedance grounded networks

In high impedance networks, the neutral of the system transformers are connected to the ground through high impedance, mostly a reactance in parallel with a high resistor.

This type of network is many times operated in radial, but can also be found operating meshed networks.

What is typical for this type of network is that the magnitude of the ground-fault current is very low compared to the short circuit current. The voltage on the healthy phases will get a magnitude of √3 times the phase voltage during the fault. The zero sequence voltage ($3V_0$) will have the same magnitude in different places in the network due to low voltage drop distribution.

The magnitude of the total fault current can be calculated according to equation 126.

$$3I_0 = \sqrt{I_R^2 + \left(I_L - I_C\right)^2}$$

(Equation 126)

Where:

$3I_0$	is the ground-fault current (A)
I_R	is the current through the neutral point resistor (A)
I_L	is the current through the neutral point reactor (A)
I_C	is the total capacitive ground-fault current (A)

The neutral point reactor is normally designed so that it can be tuned to a position where the reactive current balances the capacitive current from the network that is:

$$\omega L = \frac{1}{3 \cdot \omega \cdot C}$$

(Equation 127)

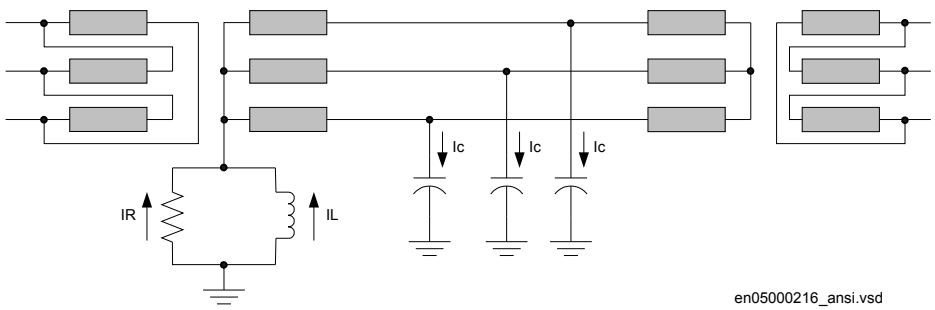

Figure 123: High impedance grounded network

The operation of high impedance grounded networks is different compared to solid grounded networks where all major faults have to be cleared very fast. In high impedance grounded networks, some system operators do not clear single phase-to-

ground faults immediately; they clear the line later when it is more convenient. In case of cross-country faults, many network operators want to selectively clear one of the two ground faults. To handle this type of phenomenon, a separate function called Phase preference logic (PPLPHIZ) is needed in medium and subtransmission network.

In this type of network, it is mostly not possible to use distance protection for detection and clearance of ground faults. The low magnitude of the ground-fault current might not give pickup of the zero-sequence measurement elements or the sensitivity will be too low for acceptance. For this reason a separate high sensitive ground-fault protection is necessary to carry out the fault clearance for single phase-to-ground fault.

7.3.2.2 Fault infeed from remote end

All transmission and most all sub-transmission networks are operated meshed. Typical for this type of network is that fault infeed from remote end will happen when fault occurs on the protected line. The fault current infeed will enlarge the fault impedance seen by the distance protection. This effect is very important to keep in mind when both planning the protection system and making the settings.

With reference to figure 124, the equation for the bus voltage V_A at A side is:

$$\overline{V}_A = \overline{I}_A \cdot p \cdot Z_L + (\overline{I}_A + \overline{I}_B) \cdot R_f$$

(Equation 128)

If we divide V_A by I_A we get Z present to the IED at A side.

$$\overline{Z}_A = \frac{\overline{V}_a}{\overline{I}_A} = p \cdot \overline{Z}_L + \frac{\overline{I}_A + \overline{I}_B}{\overline{I}_A} \cdot R_f$$

(Equation 129)

The infeed factor $(I_A+I_B)/I_A$ can be very high, 10-20 depending on the differences in source impedances at local and remote end.

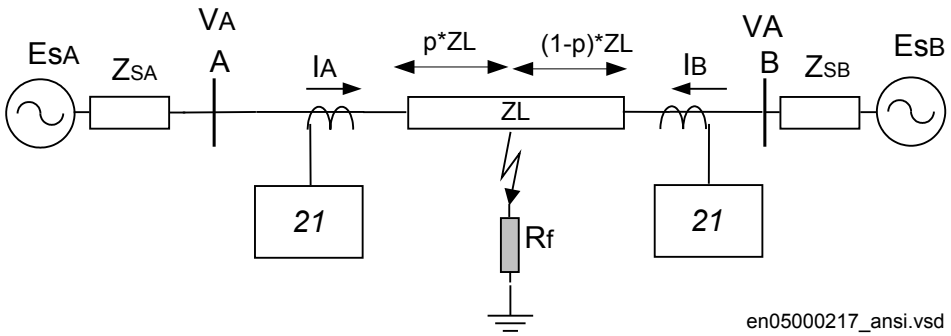

Figure 124: Influence of fault current infeed from remote line end

The effect of fault current infeed from remote line end is one of the most driving factors for justify complementary protection to distance protection.

When the line is heavily loaded, the distance protection at the exporting end will have a tendency to overreach. To handle this phenomenon, the IED has an adaptive built-in algorithm, which compensates the overreach tendency of zone 1, at the exporting end. No settings are required for this function.

7.3.2.3 Load encroachment

In some cases the load impedance might enter the zone characteristic without any fault on the protected line. The phenomenon is called load encroachment and it might occur when an external fault is cleared and high emergency load is transferred on the protected line. The effect of load encroachment is illustrated to the left in figure 125. The entrance of the load impedance inside the characteristic is of course not allowed and the way to handle this with conventional distance protection is to consider this with the settings, that is, to have a security margin between the distance zone and the minimum load impedance. This has the drawback that it will reduce the sensitivity of the protection, that is, the ability to detect resistive faults.

In some cases the load impedance might enter the zone characteristic without any fault on the protected line. The phenomenon is called load encroachment and it might occur when an external fault is cleared and high emergency load is transferred on the protected line. The effect of load encroachment is illustrated to the left in figure 125 and figure 139. The entrance of the load impedance inside the characteristic is of course not allowed and the way to handle this with conventional distance protection is to consider this with the settings, that is, to have a security margin between the distance zone and the minimum load impedance. This has the drawback that it will reduce the sensitivity of the protection, that is, the ability to detect resistive faults.

The IED has a built in function which shapes the characteristic according to the right figure of figure 125. The load encroachment algorithm will increase the possibility to

detect high fault resistances, especially for phase-to-ground faults at remote line end. For example, for a given setting of the load angle *LdAngle* for Phase selection with load encroachment, quadrilateral characteristic function (FDPSPDIS, 21), the resistive blinder for the zone measurement can be expanded according to the figure 125 given higher fault resistance coverage without risk for unwanted operation due to load encroachment. This is valid in both directions.

The use of the load encroachment feature is essential for long heavily loaded lines, where there might be a conflict between the necessary emergency load transfer and necessary sensitivity of the distance protection. The function can also preferably be used on heavy loaded medium long lines. For short lines, the major concern is to get sufficient fault resistance coverage. Load encroachment is not a major problem. So, for short lines, the load encroachment function could preferably be switched off. See section "Load impedance limitation, without load encroachment function".

The settings of the parameters for load encroachment are done in FDPSPDIS (21) function.

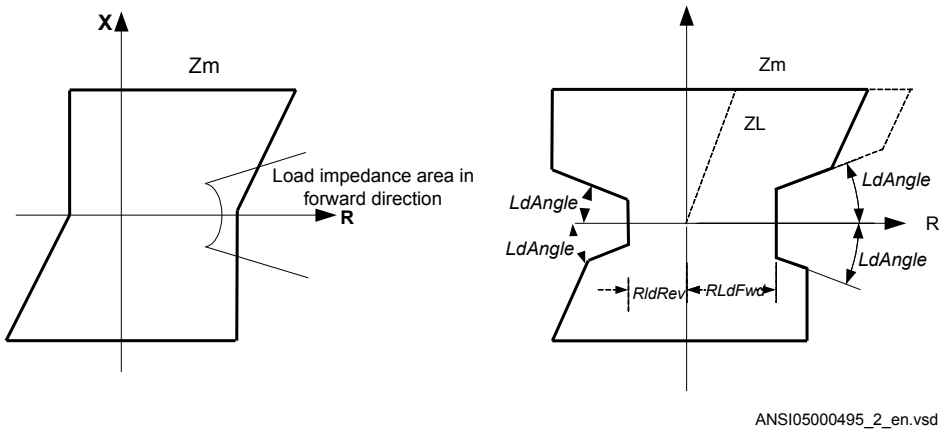

Figure 125: Load encroachment phenomena and shaped load encroachment characteristic defined in Phase selection with load encroachment function FDPSPDIS (21)

7.3.2.4 Short line application

Transmission line lengths for protection application purposes are classified as short, medium and long. The definition of short, medium and long lines is found in IEEE Std C37.113-1999.). The length classification is defined by the ratio of the source impedance at the protected line’s terminal to the protected line’s impedance (SIR). SIR’s of about 4 or greater generally define a short line. Medium lines are those with SIR’s greater than 0.5 and less than 4

In short line applications, the major concern is to get sufficient fault resistance coverage. Load encroachment is not so common. The line length that can be recognized as a short line is not a fixed length; it depends on system parameters such as voltage and source impedance, see table 17.

Table 17: Definition of short and very short line

Line category	Vn 110 kV	Vn 500 kV
Very short line	0.75 -3.5mile	3-15 miles
Short line	4-7 miles	15-30 miles

The IED's ability to set resistive and reactive reach independent for positive and zero sequence fault loops and individual fault resistance settings for phase-to-phase and phase-to-ground fault together with load encroachment algorithm improves the possibility to detect high resistive faults without conflict with the load impedance, see figure 125.

For very short line applications, the underreaching zone 1 can not be used due to the voltage drop distribution throughout the line will be too low causing risk for overreaching. It is difficult, if not impossible, to apply distance protection for short lines. It is possible to apply an overreaching pilot communication based POTT or Blocking scheme protection for such lines to have fast tripping along the entire line. Usually a unit protection, based on comparison of currents at the ends of the lines is applied for such lines.

Load encroachment is normally no problem for short line applications.

7.3.2.5 Long transmission line application

For long transmission lines, the margin to the load impedance, that is, to avoid load encroachment, will normally be a major concern. It is well known that it is difficult to achieve high sensitivity for phase-to-ground fault at remote line end of long lines when the line is heavy loaded.

What can be recognized as long lines with respect to the performance of distance protection can generally be described as in table 18, long lines have Source impedance ratio (SIR’s) less than 0.5.

Table 18: Definition of long and very long lines

Line category	Vn 110 kV	Vn 500 kV
Long lines	45-60 miles	200-250 miles
Very long lines	>60 miles	>250 miles

The IED's ability to set resistive and reactive reach independent for positive and zero sequence fault loops and individual fault resistance settings for phase-to-phase and phase-to-ground fault together with load encroachment algorithm improves the possibility to detect high resistive faults at the same time as the security is improved (risk for unwanted trip due to load encroachment is eliminated), see figure 126.

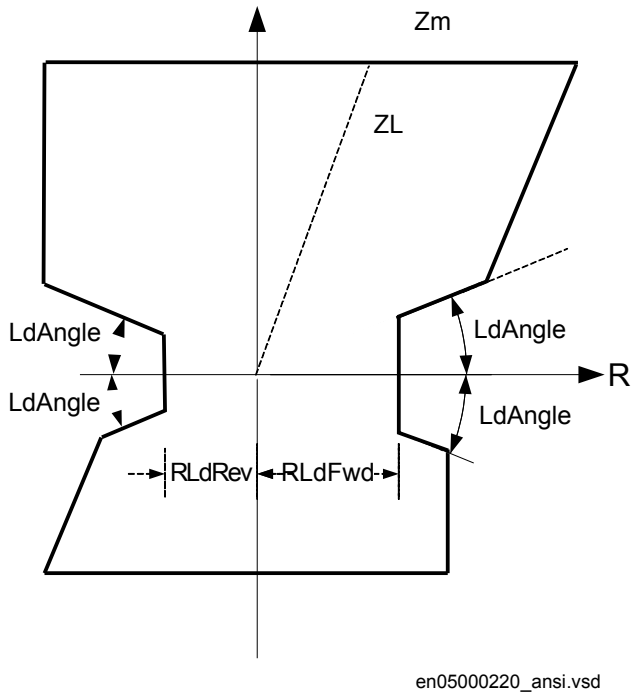

Figure 126: Characteristic for zone measurement for a long line

7.3.2.6 Parallel line application with mutual coupling

General

Introduction of parallel lines in the network is increasing due to difficulties to get necessary area for new lines.

Parallel lines introduce an error in the measurement due to the mutual coupling between the parallel lines. The lines need not be of the same voltage in order to experience mutual coupling, and some coupling exists even for lines that are separated by 100 meters or more. The mutual coupling does influence the zero sequence impedance to the fault point but it does not normally cause voltage inversion.

It can be shown from analytical calculations of line impedances that the mutual impedances for positive and negative sequence are very small (< 1-2%) of the self impedance and it is a practice to neglect them.

From an application point of view there exists three types of network configurations (classes) that must be considered when making the settings for the protection function.

The different network configuration classes are:

1. Parallel line with common positive and zero sequence network
2. Parallel circuits with common positive but isolated zero sequence network
3. Parallel circuits with positive and zero sequence sources isolated.

One example of class 3 networks could be the mutual coupling between a 400kV line and rail road overhead lines. This type of mutual coupling is not so common although it exists and is not treated any further in this manual.

For each type of network class, there are three different topologies; the parallel line can be in service, out of service, out of service and grounded in both ends.

The reach of the distance protection zone 1 will be different depending on the operation condition of the parallel line. This can be handled by the use of different setting groups for handling the cases when the parallel line is in operation and out of service and grounded at both ends.

The distance protection within the IED can compensate for the influence of a zero sequence mutual coupling on the measurement at single phase-to-ground faults in the following ways, by using:

- The possibility of different setting values that influence the ground-return compensation for different distance zones within the same group of setting parameters.
- Different groups of setting parameters for different operating conditions of a protected multi circuit line.

Most multi circuit lines have two parallel operating circuits.

Parallel line applications

This type of networks is defined as those networks where the parallel transmission lines terminate at common nodes at both ends.

The three most common operation modes are:

1. Parallel line in service.
2. Parallel line out of service and grounded.
3. Parallel line out of service and not grounded.

Parallel line in service

This type of application is very common and applies to all normal sub-transmission and transmission networks.

Let us analyze what happens when a fault occurs on the parallel line see figure 127.

From symmetrical components, we can derive the impedance Z at the relay point for normal lines without mutual coupling according to equation 130.

$$\bar{Z} = \frac{\bar{V}_{ph}}{\bar{I}_{ph} + 3\bar{I}_0 \cdot \frac{\bar{Z}_0 - \bar{Z}_1}{3 \cdot \bar{Z}_1}} = \frac{\bar{V}_{ph}}{\bar{I}_{ph} + 3\bar{I}_0 \cdot \bar{K}_N}$$

(Equation 130)

Where:

Vph	is phase to ground voltage at the relay point
Iph	is phase current in the faulty phase
3I0	is ground fault current
Z1	is positive sequence impedance
Z0	is zero sequence impedance

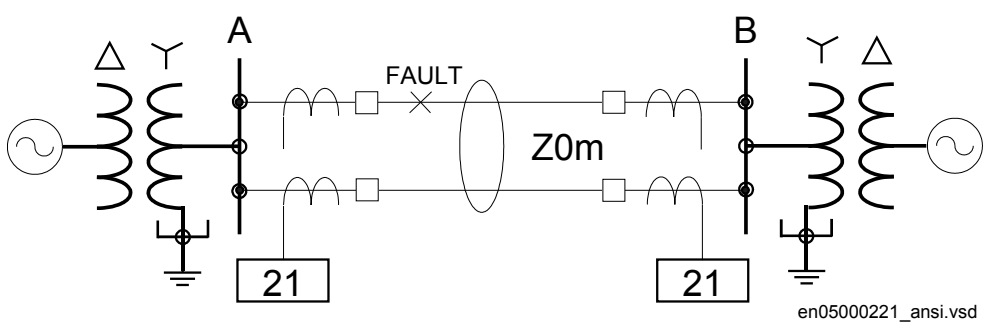

Figure 127: Class 1, parallel line in service

The equivalent circuit of the lines can be simplified, see figure 128.

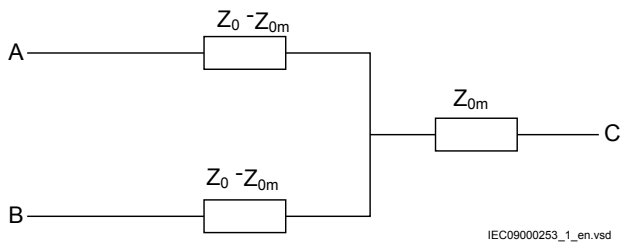

Figure 128: Equivalent zero sequence impedance circuit of the double-circuit, parallel, operating line with a single phase-to-ground fault at the remote busbar

When mutual coupling is introduced, the voltage at the relay point A will be changed according to equation 131.

$$V_{ph} = \overline{Z}1_L \cdot \left(\overline{I}_{ph} + 3\overline{I}_0 \cdot \frac{\overline{Z}0_L - \overline{Z}1_L}{3 \cdot \overline{Z}1_L} + 3\overline{I}_{0p} \frac{\overline{Z}0_m}{3 \cdot \overline{Z}1_L} \right)$$

(Equation 131)

By dividing equation 131 by equation 130 and after some simplification we can write the impedance present to the relay at A side as:

$$Z = \overline{Z1_L} \left(1 + \frac{3\overline{I}0 \cdot \overline{K}Nm}{\overline{I}ph + 3\overline{I}0 \cdot \overline{K}N} \right)$$

(Equation 132)

Where:

KNm = Z0m/(3 · Z1L)

The second part in the parentheses is the error introduced to the measurement of the line impedance.

If the current on the parallel line has negative sign compared to the current on the protected line, that is, the current on the parallel line has an opposite direction compared to the current on the protected line, the distance function will overreach. If the currents have the same direction, the distance protection will underreach.

Maximum overreach will occur if the fault current infeed from remote line end is weak. If considering a single phase-to-ground fault at 'p' unit of the line length from A to B on the parallel line for the case when the fault current infeed from remote line end is zero, the voltage V_A in the faulty phase at A side as in equation 133.

$$\overline{V_A} = \mathrm{p} \cdot \overline{Z1_L}\left(\overline{I_{ph}} + \overline{K_N} \cdot 3\overline{I_0} + \overline{K_{Nm}} \cdot 3\overline{I_{0p}}\right)$$

(Equation 133)

One can also notice that the following relationship exists between the zero sequence currents:

$$3\overline{I_0} \cdot \overline{Z0_L} = 3\overline{I0_p} \cdot \overline{Z0_L}\left(2 - p\right)$$

(Equation 134)

Simplification of equation 134, solving it for 3I0p and substitution of the result into equation 133 gives that the voltage can be drawn as:

$$\overline{V_A} = \mathrm{p} \cdot \overline{Z1_L}\left(\overline{I_{ph}} + \overline{K_N} \cdot 3\overline{I_0} + \overline{K_{Nm}} \cdot \frac{3\overline{I_0} \cdot \mathrm{p}}{2 - \mathrm{p}}\right)$$

(Equation 135)

If we finally divide equation 135 with equation 130 we can draw the impedance present to the IED as

$$\overline{Z} = p \cdot \overline{ZI_L}\left(\frac{\overline{I_{ph}} + \overline{KN} \cdot 3\overline{I_0} + \overline{KN_m} \cdot \frac{3\overline{I_0} \cdot p}{2 - p}}{I_{ph} + 3\overline{I_0} \cdot \overline{KN}}\right)$$

(Equation 136)

Calculation for a 400 kV line, where we for simplicity have excluded the resistance, gives with X1L=0.48 Ohm/Mile, X0L=1.4Ohms/Mile, zone 1 reach is set to 90% of the line reactance p=71% that is, the protection is underreaching with approximately 20%.

The zero sequence mutual coupling can reduce the reach of distance protection on the protected circuit when the parallel line is in normal operation. The reduction of the reach is most pronounced with no current infeed in the IED closest to the fault. This reach reduction is normally less than 15%. But when the reach is reduced at one line end, it is proportionally increased at the opposite line end. So this 15% reach reduction does not significantly affect the operation of a permissive underreaching scheme.

Parallel line out of service and grounded

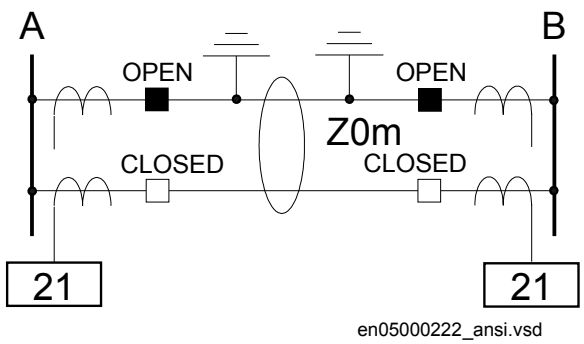

Figure 129: The parallel line is out of service and grounded

When the parallel line is out of service and grounded at both line ends on the bus bar side of the line CTs so that zero sequence current can flow on the parallel line, the equivalent zero sequence circuit of the parallel lines will be according to figure 130.

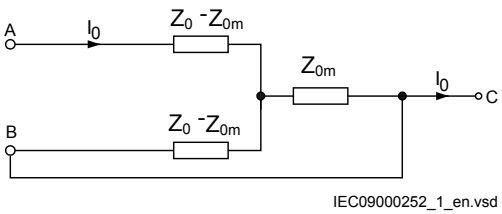

Figure 130: Equivalent zero sequence impedance circuit for the double-circuit line that operates with one circuit disconnected and grounded at both ends

Here the equivalent zero-sequence impedance is equal to Z_0-Z_0m in series with parallel of (Z_0-Z_{0m}) and Z_{0m} which is equal to equation 137.

$$\overline{Z}_E = \frac{\overline{Z}_0^2 - \overline{Z}_{om}^2}{\overline{Z}_0}$$

(Equation 137)

The influence on the distance measurement will be a considerable overreach, which must be considered when calculating the settings.

All expressions below are proposed for practical use. They assume the value of zero sequence, mutual resistance R_{0m} equals to zero. They consider only the zero sequence, mutual reactance X_{0m}. Calculate the equivalent X_{0E} and R_{0E} zero sequence parameters according to equation 138 and equation 139 for each particular line section and use them for calculating the reach for the underreaching zone.

$$R_{0E} = R_0 \cdot \left(1 + \frac{X_{0m}^{\ 2}}{R_0^{\ 2} + X_0^{\ 2}} \right)$$

(Equation 138)

$$X_{0E} = X_0 \cdot \left(1 - \frac{X_{0m}^{\ 2}}{R_0^{\ 2} + X_0^{\ 2}} \right)$$

(Equation 139)

Parallel line out of service and not grounded

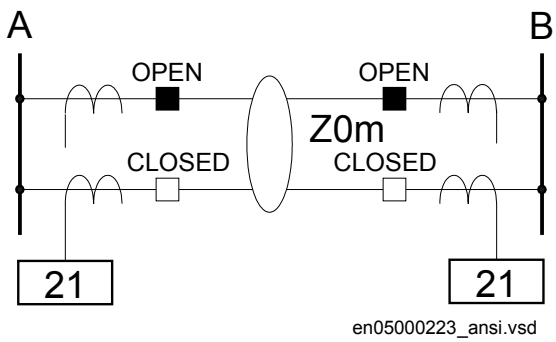

Figure 131: Parallel line is out of service and not grounded

When the parallel line is out of service and not grounded, the zero sequence on that line can only flow through the line admittance to the ground. The line admittance is high which limits the zero-sequence current on the parallel line to very low values. In practice, the equivalent zero-sequence impedance circuit for faults at the remote bus bar can be simplified to the circuit shown in figure 131

The line zero sequence mutual impedance does not influence the measurement of the distance protection in a faulty circuit. This means that the reach of the underreaching distance protection zone is reduced if, due to operating conditions, the equivalent zero sequence impedance is set according to the conditions when the parallel system is out of operation and grounded at both ends.

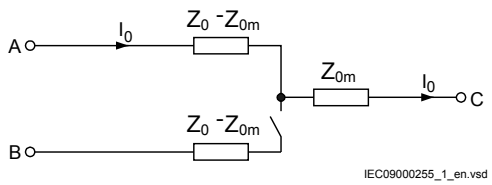

Figure 132: Equivalent zero-sequence impedance circuit for a double-circuit line with one circuit disconnected and not grounded

The reduction of the reach is equal to equation 140.

$$\overline{K}_U = \frac{\frac{1}{3}\cdot\left(2\cdot\overline{Z_1}+\overline{Z_{0E}}\right)+R_f}{\frac{1}{3}\cdot\left(2\cdot\overline{Z_1}+\overline{Z_0}\right)+R_f} = 1-\frac{\overline{Z_{m0}}^2}{\overline{Z_0}\cdot\left(2\cdot\overline{Z}_1+\overline{Z}_0+3R_f\right)}$$

(Equation 140)

This means that the reach is reduced in reactive and resistive directions. If the real and imaginary components of the constant A are equal to equation 141 and equation 142.

$$\mathrm{Re}(\overline{A}) = R0\cdot(2\cdot R1+R0+3\cdot Rf)-X0\cdot(X0+2\cdot X1)$$

(Equation 141)

$$\mathrm{Im}(\overline{A}) = X_0\cdot(2\cdot R_1+R_0+3\cdot R_1)+R_0\cdot(2\cdot X_1+X_0)$$

(Equation 142)

The real component of the KU factor is equal to equation 143.

$$\mathrm{Re}\left(\overline{K}_u\right) = 1+\frac{\mathrm{Re}\left(\overline{A}\right)\cdot X_{m0}{}^2}{\left[\mathrm{Re}\left(\overline{A}\right)\right]^2+\left[\mathrm{Im}\left(\overline{A}\right)\right]^2}$$

(Equation 143)

The imaginary component of the same factor is equal to equation 144.

$$\mathrm{Im}\left(\overline{K}_U\right) = \frac{\mathrm{Im}\left(\overline{A}\right)\cdot X_{m0}{}^2}{\left[\mathrm{Re}\left(\overline{A}\right)\right]^2+\left[\mathrm{Im}\left(\overline{A}\right)\right]^2}$$

(Equation 144)

Ensure that the underreaching zones from both line ends will overlap a sufficient amount (at least 10%) in the middle of the protected circuit.

7.3.2.7 Tapped line application

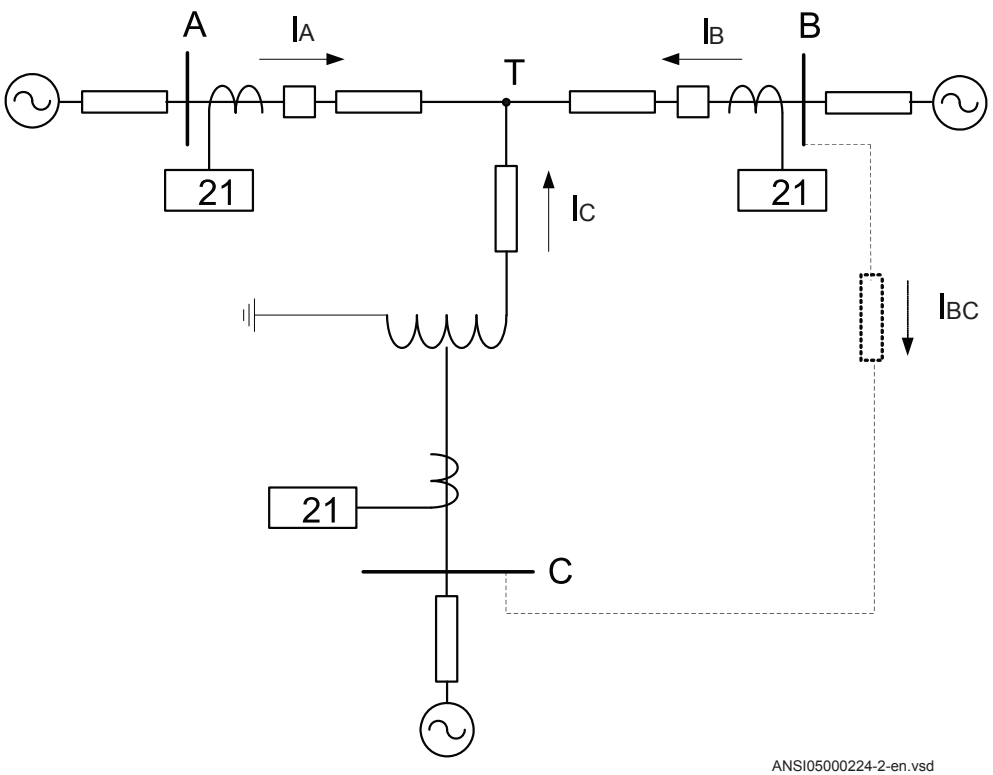

Figure 133: Example of tapped line with Auto transformer

This application gives rise to similar problem that was highlighted in section "Fault infeed from remote end" , that is increased measured impedance due to fault current infeed. For example, for faults between the T point and B station the measured impedance at A and C will be

$$\bar{Z}_A = \bar{Z}_{AT} + \frac{\bar{I}_A + \bar{I}_C}{\bar{I}_A} \cdot \bar{Z}_{TF}$$

(Equation 145)

$$\overline{Z}_C = \overline{Z}_{Trf} + (\overline{Z}_{CT} + \frac{\dot{I}_A + \dot{I}_C}{\dot{I}_C} \cdot \overline{Z}_{TB}) \cdot (\frac{V2}{V1})^2$$

(Equation 146)

Where:

Z_{AT} and Z_{CT}	is the line impedance from the A respective C station to the T point.
I_A and I_C	is fault current from A respective C station for fault between T and B.
V2/V1	Transformation ratio for transformation of impedance at V1 side of the transformer to the measuring side V2 (it is assumed that current and voltage distance function is taken from V2 side of the transformer).
Z_{TF}	is the line impedance from the T point to the fault (F).
Z_{Trf}	Transformer impedance

For this example with a fault between T and B, the measured impedance from the T point to the fault will be increased by a factor defined as the sum of the currents from T point to the fault divided by the IED current. For the IED at C, the impedance on the high voltage side V1 has to be transferred to the measuring voltage level by the transformer ratio.

Another complication that might occur depending on the topology is that the current from one end can have a reverse direction for fault on the protected line. For example, for faults at T the current from B might go in reverse direction from B to C depending on the system parameters (see the dotted line in figure 133), given that the distance protection in B to T will measure wrong direction.

In three-end application, depending on the source impedance behind the IEDs, the impedances of the protected object and the fault location, it might be necessary to accept zone 2 trip in one end or sequential trip in one end.

Generally for this type of application it is difficult to select settings of zone 1 that both gives overlapping of the zones with enough sensitivity without interference with other zone 1 settings, that is, without selectivity conflicts. Careful fault calculations are necessary to determine suitable settings and selection of proper scheme communication.

Fault resistance

The performance of distance protection for single phase-to-ground faults is very important, because normally more than 70% of the faults on transmission lines are single phase-to-ground faults. At these faults, the fault resistance is composed of three parts: arc resistance, resistance of a tower construction, and tower-footing resistance. The arc resistance can be calculated according to Warrington's formula:

$$Rarc = \frac{28707 \cdot L}{I^{1.4}}$$

(Equation 147)

where:

L represents the length of the arc (in meters). This equation applies for the distance protection zone 1. Consider approximately three times arc foot spacing for the zone 2 and to give extra margin to the influence of wind speed and temperature.

I is the actual fault current in A.

In practice, the setting of fault resistance for both phase-to-ground *RFPE* and phase-to-phase *RFPP* should be as high as possible without interfering with the load impedance in order to obtain reliable fault detection. However for zone1 it is necessary to limit the reach according to setting instructions in order to avoid overreach.

7.3.3 Setting guidelines

7.3.3.1 General

The settings for Distance measuring zones, quadrilateral characteristic (ZMQPDIS, 21) are done in primary values. The instrument transformer ratio that has been set for the analog input card is used to automatically convert the measured secondary input signals to primary values used in ZMQPDIS (21).

The following basics must be considered, depending on application, when doing the setting calculations:

- Errors introduced by current and voltage instrument transformers, particularly under transient conditions.
- Inaccuracies in the line zero-sequence impedance data, and their effect on the calculated value of the ground-return compensation factor.
- The effect of infeed between the IED and the fault location, including the influence of different Z_0/Z_1 ratios of the various sources.
- The phase impedance of non transposed lines is not identical for all fault loops. The difference between the impedances for different phase-to-ground loops can be as large as 5-10% of the total line impedance.
- The effect of a load transfer between the IEDs of the protected fault resistance is considerable, the effect must be recognized.The load transfer on the protected line should be considered for resistive phase to ground faults
- Zero-sequence mutual coupling from parallel lines.

7.3.3.2 Setting of zone 1

The different errors mentioned earlier usually require a limitation of the underreaching zone (normally zone 1) to 75 - 90% of the protected line.

In case of parallel lines, consider the influence of the mutual coupling according to section "Parallel line application with mutual coupling" and select the case(s) that are valid in the particular application. By proper setting it is possible to compensate for the cases when the parallel line is in operation, out of service and not grounded and out of service and grounded in both ends. The setting of ground-fault reach should be selected to be <95% also when parallel line is out of service and grounded at both ends (worst case).

7.3.3.3 Setting of overreaching zone

The first overreaching zone (normally zone 2) must detect faults on the whole protected line. Considering the different errors that might influence the measurement in the same way as for zone 1, it is necessary to increase the reach of the overreaching zone to at least 120% of the protected line. The zone 2 reach can be even higher if the fault infeed from adjacent lines at remote end is considerable higher than the fault current at the IED location.

The setting shall generally not exceed 80% of the following impedances:

- The impedance corresponding to the protected line, plus the first zone reach of the shortest adjacent line.
- The impedance corresponding to the protected line, plus the impedance of the maximum number of transformers operating in parallel on the bus at the remote end of the protected line.

Larger overreach than the mentioned 80% can often be acceptable due to fault current infeed from other lines. This requires however analysis by means of fault calculations.

If any of the above gives a zone 2 reach less than 120%, the time delay of zone 2 must be increased by approximately 200ms to avoid unwanted operation in cases when the telecommunication for the short adjacent line at remote end is down during faults. The zone 2 must not be reduced below 120% of the protected line section. The whole line must be covered under all conditions.

The requirement that the zone 2 shall not reach more than 80% of the shortest adjacent line at remote end is highlighted in the example below.

If a fault occurs at point F see figure 134, the IED at point A senses the impedance:

$$\overline{Z}_{AF} = \frac{\overline{V}_A}{\overline{I}_A} = \overline{Z}_{AC} + \frac{\overline{I}_A + \overline{I}_C}{\overline{I}_A} \cdot \overline{Z}_{CF} + \frac{\overline{I}_A + \overline{I}_C + \overline{I}_B}{\overline{I}_A} \cdot R_F = \overline{Z}_{AC} + \left(1 + \frac{\overline{I}_C}{\overline{I}_A}\right) \cdot \overline{Z}_{CF} + \left(1 + \frac{\overline{I}_C + \overline{I}_B}{\overline{I}_A}\right) \cdot R_F$$

(Equation 148)

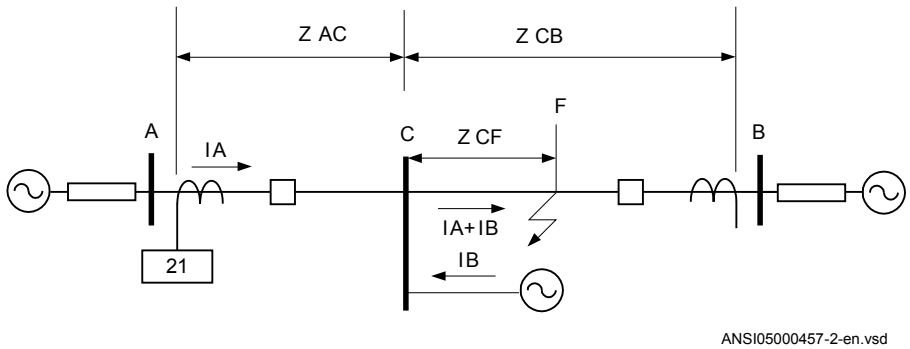

Figure 134: Setting of overreaching zone

7.3.3.4 Setting of reverse zone

The reverse zone is applicable for purposes of scheme communication logic, current reversal logic, weak-end infeed logic, and so on. The same applies to the back-up protection of the bus bar or power transformers. It is necessary to secure, that it always covers the overreaching zone, used at the remote line IED for the telecommunication purposes.

Consider the possible enlarging factor that might exist due to fault infeed from adjacent lines. Equation 149 can be used to calculate the reach in reverse direction when the zone is used for blocking scheme, weak-end infeed, and so on.

$$Zrev \geq 1.2 \cdot \left(ZL - Z2rem\right)$$

(Equation 149)

Where:

ZL is the protected line impedance

Z2rem is zone 2 setting at remote end of protected line.

In many applications it might be necessary to consider the enlarging factor due to fault current infeed from adjacent lines in the reverse direction in order to obtain certain sensitivity.

7.3.3.5 Setting of zones for parallel line application

Parallel line in service – Setting of zone 1

With reference to section "Parallel line applications", the zone reach can be set to 85% of the protected line.

However, influence of mutual impedance has to be taken into account.

Parallel line in service – setting of zone 2

Overreaching zones (in general, zones 2 and 3) must overreach the protected circuit in all cases. The greatest reduction of a reach occurs in cases when both parallel circuits are in service with a single phase-to-ground fault located at the end of a protected line. The equivalent zero sequence impedance circuit for this case is equal to the one in figure 128 in section "Parallel line in service".

The components of the zero sequence impedance for the overreaching zones must be equal to at least:

$$R_{0E} = R_0 + R_{m0}$$

(Equation 150)

$$X_{0E} = X_0 + X_{m0}$$

(Equation 151)

Check the reduction of a reach for the overreaching zones due to the effect of the zero sequence mutual coupling. The reach is reduced for a factor:

$$K0 = 1 - \frac{Z0_m}{2 \cdot Z1 + Z0 + R_f}$$

(Equation 152)

If the denominator in equation 152 is called B and Z0m is simplified to X0m, then the real and imaginary part of the reach reduction factor for the overreaching zones can be written as:

$$\mathrm{Re}\left(\overline{K}0\right) = 1 - \frac{X0m \cdot \mathrm{Re}\left(B\right)}{\mathrm{Re}\left(B\right)^2 + \mathrm{Im}\left(B\right)^2}$$

(Equation 153)

$$\mathrm{Im}\left(\overline{K}0\right) = \frac{X0m \cdot \mathrm{Im}\left(B\right)}{\mathrm{Re}\left(B\right)^2 + \mathrm{Im}\left(B\right)^2}$$

(Equation 154)

Parallel line is out of service and grounded in both ends

Apply the same measures as in the case with a single set of setting parameters. This means that an underreaching zone must not overreach the end of a protected circuit for the single phase-to-ground faults.

Set the values of the corresponding zone (zero-sequence resistance and reactance) equal to:

$$R_{0E} = R_0 \cdot \left(1 + \frac{X_{m0}^2}{R_0^2 + X_0^2}\right)$$

(Equation 155)

$$X_{0E} = X_0 \cdot \left(1 - \frac{X_{m0}^2}{R_0^2 + X_0^2}\right)$$

(Equation 156)

7.3.3.6 Setting of reach in resistive direction

Set the resistive reach *R1* independently for each zone.

Set separately the expected fault resistance for phase-to-phase faults *RFPP* and for the phase-to-ground faults *RFPE* for each zone. For each distance zone, set all remaining reach setting parameters independently of each other.

The final reach in resistive direction for phase-to-ground fault loop measurement automatically follows the values of the line-positive and zero-sequence resistance, and at the end of the protected zone is equal to equation 157.

$$\mathrm{R} = \frac{1}{3}\left(2 \cdot \mathrm{R1} + \mathrm{R0}\right) + \mathrm{RFPE}$$

(Equation 157)

$$\varphi loop = \arctan\left[\frac{2 \cdot \mathrm{X1} + \mathrm{X0}}{2 \cdot \mathrm{R1} + \mathrm{R0}}\right]$$

(Equation 158)

Setting of the resistive reach for the underreaching zone 1 should follow the condition to minimize the risk for overreaching:

$$RFPE \le 4.5 \cdot X1$$

(Equation 159)

The fault resistance for phase-to-phase faults is normally quite low, compared to the fault resistance for phase-to-ground faults. To minimize the risk for overreaching, limit the setting of the zone 1 reach in resistive direction for phase-to-phase loop measurement in the phase domain to:

$$RFPP \le 6 \cdot X1$$

(Equation 160)

7.3.3.7 Load impedance limitation, without load encroachment function

The following instructions are valid when Phase selection with load encroachment, quadrilateral characteristic function FDPSPDIS (21) is to be used. The setting of the load resistance *RLdFwd* and *RldRev* in FDPSPDIS (21) must in this case be set to max value (3000). If FDPSPDIS (21) is to be used for all or some of the measuring zones, the load limitation for those zones according to this chapter can be omitted. Check the maximum permissible resistive reach for any zone to ensure that there is a sufficient setting margin between the boundary and the minimum load impedance. The minimum load impedance (Ω/phase) is calculated as:

$$Z_{load\,min} = \frac{V^2}{S}$$

(Equation 161)

Where:

V is the minimum phase-to-phase voltage in kV

S is the maximum apparent power in MVA.

The load impedance [Ω/phase] is a function of the minimum operation voltage and the maximum load current:

$$Z_{load} = \frac{V_{min}}{\sqrt{3} \cdot I_{max}}$$

(Equation 162)

Minimum voltage V_{min} and maximum current I_{max} are related to the same operating conditions. Minimum load impedance occurs normally under emergency conditions.

As a safety margin is required to avoid load encroachment under three-phase conditions and to guarantee correct healthy phase IED operation under combined heavy three-phase load and ground faults, consider both: phase-to-phase and phase-to-ground fault operating characteristics.

To avoid load encroachment for the phase-to-ground measuring elements, the set resistive reach of any distance protection zone must be less than 80% of the minimum load impedance.

$$RFFwPG \le 0.8 \cdot Z_{load}$$

(Equation 163)

This equation is applicable only when the loop characteristic angle for the single phase-to-ground faults is more than three times as large as the maximum expected load-impedance angle. For the case when the loop characteristic angle is less than three times the load-impedance angle, more accurate calculations are necessary according to equation 164.

$$RFFwPG \le 0.8 \cdot Z_{load\,\min} \cdot \left[\cos\partial - \frac{2 \cdot R1 + R0}{2 \cdot X1 + X0} \cdot \sin\partial \right]$$

(Equation 164)

Where:

∂ is a maximum load-impedance angle, related to the maximum load power.

To avoid load encroachment for the phase-to-phase measuring elements, the set resistive reach of any distance protection zone must be less than 160% of the minimum load impedance.

$$RFFwPG \le 1.6 \cdot Z_{load}$$

(Equation 165)

Equation 165 is applicable only when the loop characteristic angle for the phase-to-phase faults is more than three times as large as the maximum expected load-impedance angle. More accurate calculations are necessary according to equation 166.

$$RFFwPP \le 1.6 \cdot Z_{load\,\min} \cdot \left[\cos\partial - \frac{R1}{X1} \cdot \sin\partial \right]$$

(Equation 166)

Set the fault resistance coverage RFRwPP and RFRwPG to the same value as in forward direction, if that suits the application. All this is applicable for all measuring zones when no Power swing detection function ZMRPSB (78) is activated in the IED. Use an additional safety margin of approximately 20% in cases when a ZMRPSB (78) function is activated in the IED, refer to the description of Power swing detection function ZMRPSB (78).

7.3.3.8 Load impedance limitation, with Phase selection with load encroachment, quadrilateral characteristic function activated

The parameters for shaping of the load encroachment characteristic are found in the description of Phase selection with load encroachment, quadrilateral characteristic function (FDPSPDIS, 21).

7.3.3.9 Setting of minimum operating currents

The operation of Distance protection zone, quadrilateral characteristic (ZMQPDIS, 21) can be blocked if the magnitude of the currents is below the set value of the parameter *IMinPUPP* and *IMinPUPG*.

The default setting of *IMinPUPP* and *IMinPUPG* is 20% of *IBase* where *IBase* is the chosen current for the analogue input channels. The value has been proven in practice to be suitable in most of the applications. However, there might be applications where it is necessary to increase the sensitivity by reducing the minimum operating current down to 10% of *IBase*. This happens especially in cases, when the IED serves as a remote back-up protection on series of very long transmission lines.

Setting *IMinOpIR* blocks the phase-to-ground loop if $3I_0$<*IMinOpIR*. The default setting of *IMinOpIR* is 5% of *IBase*.

The minimum operating fault current is automatically reduced to 75% of its set value, if the distance protection zone has been set for the operation in reverse direction.

7.3.3.10 Directional impedance element for quadrilateral characteristics

The evaluation of the directionality takes place in Directional impedance quadrilateral function ZDRDIR (21D). Equation 167 and equation 168 are used to classify that the fault is in forward direction for phase-to-ground fault and phase-to-phase fault.

$$-ArgDir < \arg \frac{0.8 \cdot \overline{V}1_{L1} + 0.2 \cdot \overline{V}1_{L1M}}{\overline{I}_{L1}} < ArgNeg \operatorname{Re} s$$

(Equation 167)

For the AB element, the equation in forward direction is according to.

$$-ArgDir < \arg \frac{0.8 \cdot \overline{V}1_{L1L2} + 0.2 \cdot \overline{V}1_{L1L2M}}{\overline{I}_{L1L2}} < ArgNeg\,\mathrm{Re}\,s$$

(Equation 168)

where:

AngDir	is the setting for the lower boundary of the forward directional characteristic, by default set to 15 (= -15 degrees) and
AngNegRes	is the setting for the upper boundary of the forward directional characteristic, by default set to 115 degrees, see figure 135.
$V1_A$	is positive sequence phase voltage in phase A
$V1_{AM}$	is positive sequence memorized phase voltage in phase A
I_A	is phase current in phase A
$V1_{AB}$	is voltage difference between phase A and B (B lagging A)
$V1_{ABM}$	is memorized voltage difference between phase A and B (B lagging A)
I_{AB}	is current difference between phase A and B (B lagging A)

The setting of *AngDir* and *AngNegRes* is by default set to 15 (= -15) and 115 degrees respectively (as shown in figure 135). It should not be changed unless system studies have shown the necessity.

ZDRDIR gives binary coded directional information per measuring loop on the output STDIRCND.

```
STDIR=   FWD_A*1+FWD_B*2+FWD_C*4+FWD_AB*8+
         +FWD_BC*16+FWD_CA*32+REV_A*64+REV_B*128+REV_C*256+
         +REV_AB*512+REV_BC*1024+REV_CA*2048
```

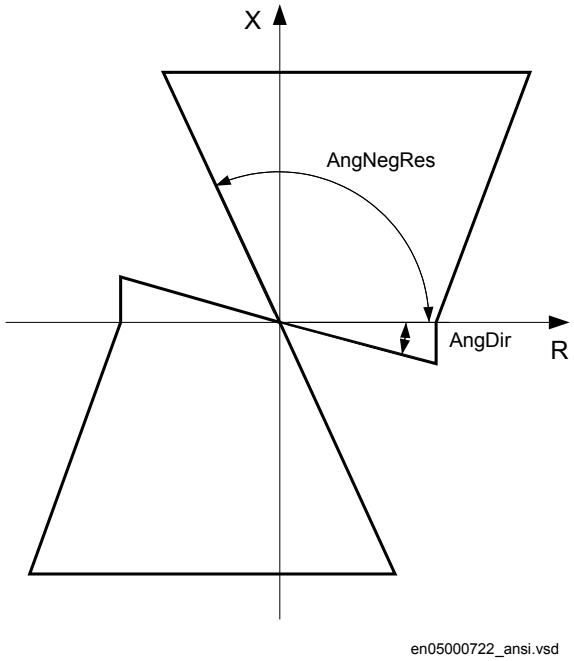

Figure 135: Setting angles for discrimination of forward and reverse fault in Directional impedance quadrilateral function ZDRDIR (21D)

The reverse directional characteristic is equal to the forward characteristic rotated by 180 degrees.

The polarizing voltage is available as long as the positive sequence voltage exceeds 5% of the set base voltage *VBase*. So the directional element can use it for all unsymmetrical faults including close-in faults.

For close-in three-phase faults, the $V1_{AM}$ memory voltage, based on the same positive sequence voltage, ensures correct directional discrimination.

The memory voltage is used for 100 ms or until the positive sequence voltage is restored.

After 100 ms the following occurs:

- If the current is still above the set value of the minimum operating current (between 10 and 30% of the set IED rated current *IBase*), the condition seals in.
  - If the fault has caused tripping, the trip endures.
  - If the fault was detected in the reverse direction, the measuring element in the reverse direction remains in operation.
- If the current decreases below the minimum operating value, the memory resets until the positive sequence voltage exceeds 10% of its rated value.

7.3.3.11 Setting of timers for distance protection zones

The required time delays for different distance protection zones are independent of each other . Distance protection zone 1 can also have a time delay, if so required for selectivity reasons. Time delays for all zones can be set in a range of 0 to 60 seconds. The tripping function of each particular zone can be inhibited by setting the corresponding *Operation* parameter to *Disabled*. Different time delays are possible for the phase-to-ground *tLG* and for the phase-to-phase *tPP* measuring loops in each distance protection zone separately, to further increase the total flexibility of a distance protection.

7.4 Full-scheme distance measuring, Mho characteristic ZMHPDIS (21)

7.4.1 Identification

Function description	IEC 61850 identification	IEC 60617 identification	ANSI/IEEE C37.2 device number
Full-scheme distance protection, mho characteristic	ZMHPDIS	Z<	21

7.4.2 Application

7.4.2.1 Functionality

Transmission and sub-transmission networks are being extended and often become more and more complex, consisting of a high number of multi-circuit and/or multi terminal lines of very different lengths. These changes in the network will normally impose more stringent demands on the fault clearing equipment in order to maintain an unchanged or increased security level of the power system.

Full-scheme distance measuring, mho characteristic function (ZMHPDIS) in the IED is designed to meet basic requirements for application on transmission and sub-transmission lines (solid grounded systems) although it also can be used on distribution levels.

7.4.2.2 System grounding

The type of system grounding plays an important role when designing the protection system. In the following some hints with respect to distance protection are highlighted.

Solid grounded networks

In solid grounded systems the transformer neutrals are connected solidly to ground without any impedance between the transformer neutral and ground.

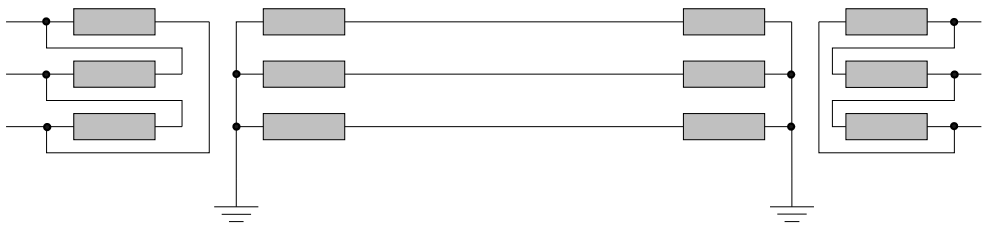

Figure 136: Solidly grounded network

The ground-fault current is as high as or even higher than the short-circuit current. The series impedances determine the magnitude of the ground-fault current. The shunt admittance has very limited influence on the ground-fault current. The shunt admittance may, however, have some marginal influence on the ground-fault current in networks with long transmission lines.

The ground-fault current at single phase-to-ground in phase A can be calculated as equation 169:

$$3I_0 = \frac{3 \cdot V_A}{Z_1+Z_2+Z_0+3Z_f} = \frac{V_A}{Z_1+Z_N+Z_f}$$

(Equation 169)

Where:

V_A	is the phase to ground voltage (kV) in the faulty phase before fault
Z_1	is the positive sequence impedance (Ω/phase)
Z_2	is the negative sequence impedance (Ω/phase)
Z_0	is the zero sequence impedance (Ω/phase)
Z_f	is the fault impedance (Ω), often resistive
Z_N	is the ground return impedance defined as $(Z_0-Z_1)/3$

The voltage on the healthy phases is generally lower than 140% of the nominal phase-to-ground voltage. This corresponds to about 80% of the nominal phase-to-phase voltage.

The high zero-sequence current in solid grounded networks makes it possible to use impedance measuring technique to detect ground fault. However, distance protection has limited possibilities to detect high resistance faults and should therefore always be complemented with other protection function(s) that can carry out the fault clearance in those cases.

Effectively grounded networks

A network is defined as effectively grounded if the ground-fault factor f_e is less than 1.4. The ground-fault factor is defined according to equation 43.

$$f_e = \left| \frac{V_{max}}{V_{pn}} \right|$$

(Equation 170)

Where:

V_{max}	is the highest fundamental frequency voltage on one of the healthy phases at single phase-to-ground fault.
V_{pn}	is the phase-to-ground fundamental frequency voltage before fault.

Another definition for effectively grounded network is when the following relationships between the symmetrical components of the network impedances are valid, see equation 171 and equation 172.

$$X_0 \leq 3 \cdot X_1$$

(Equation 171)

$$R_0 \leq X_1$$

(Equation 172)

Where

R_0	is the zero sequence resistance
X_0	is the zero sequence reactance
X_1	is the positive sequence reactance

The magnitude of the ground-fault current in effectively grounded networks is high enough for impedance measuring element to detect ground fault. However, in the same

way as for solid grounded networks, distance protection has limited possibilities to detect high resistance faults and should therefore always be complemented with other protection function(s) that can carry out the fault clearance in this case.

High impedance grounded networks

In high impedance networks the neutral of the system transformers are connected to the ground through high impedance, mostly a reactance in parallel with a high resistor.

This type of network is many times operated in radial, but can also be found operating meshed networks.

What is typical for this type of network is that the magnitude of the ground-fault current is very low compared to the short-circuit current. The voltage on the healthy phases will get a magnitude of √3 times the phase voltage during the fault. The zero-sequence voltage (3V0) will have the same magnitude in different places in the network due to low voltage drop distribution.

The magnitude of the total fault current can be calculated according to equation 173.

$$3I_0 = \sqrt{I_R^2 + \left(I_L - I_C\right)^2}$$

(Equation 173)

where

$3I_0$	is the ground-fault current (A)
I_R	is the current through the neutral point resistor (A)
I_L	is the current through the neutral point reactor (A)
I_C	is the total capacitive ground-fault current (A)

The neutral point reactor is normally designed so that it can be tuned to a position where the inductive current balances the capacitive current from the network that is:

$$\omega L = \frac{1}{3 \cdot \omega \cdot C}$$

(Equation 174)

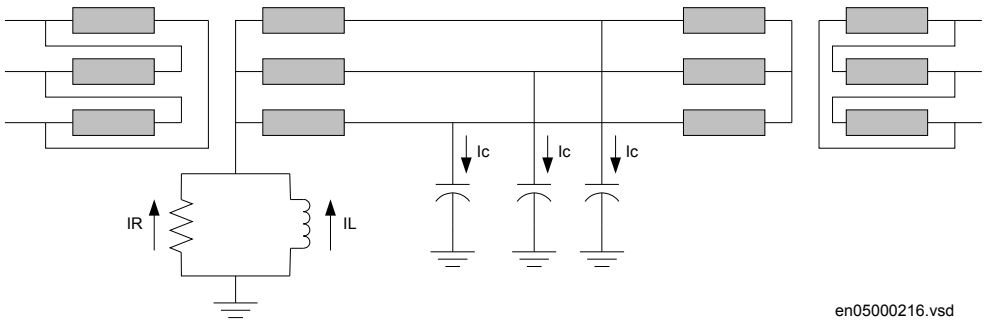

Figure 137: High impedance grounding network

The operation of high impedance grounded networks is different compared to solid grounded networks where all major faults have to be cleared very fast. In high impedance grounded networks, some system operators do not clear single phase-to-ground faults immediately; they clear the line later when it is more convenient. In case of cross-country faults, many network operators want to selectively clear one of the two ground faults. To handle this type phenomena Phase preference logic function (PPLPHIZ) is needed, which is not common to be used in transmission applications.

In this type of network, it is mostly not possible to use distance protection for detection and clearance of ground faults. The low magnitude of the ground-fault current might not give pickup of the zero-sequence measurement element or the sensitivity will be too low for acceptance. For this reason a separate high sensitive ground-fault protection is necessary to carry out the fault clearance for single phase-to-ground fault.

7.4.2.3 Fault infeed from remote end

All transmission and most all sub-transmission networks are operated meshed. Typical for this type of network is that we will have fault infeed from remote end when fault occurs on the protected line. The fault infeed will enlarge the fault impedance seen by the distance protection. This effect is very important to keep in mind when both planning the protection system and making the settings.

With reference to figure 138, we can draw the equation for the bus voltage V_A at left side as:

$$\overline{V}_A = \overline{I}_A \cdot p \cdot Z_L + (\overline{I}_A + \overline{I}_B) \cdot R_f$$

(Equation 175)

If we divide V_A by IA we get Z present to the IED at A side

$$\overline{Z}_A = \frac{\overline{V}_a}{\overline{I}_A} = p \cdot \overline{Z}_L + \frac{\overline{I}_A + \overline{I}_B}{\overline{I}_A} \cdot R_f$$

(Equation 176)

The infeed factor $(I_A+I_B)/I_A$ can be very high, 10-20 depending on the differences in source impedances at local and remote end.

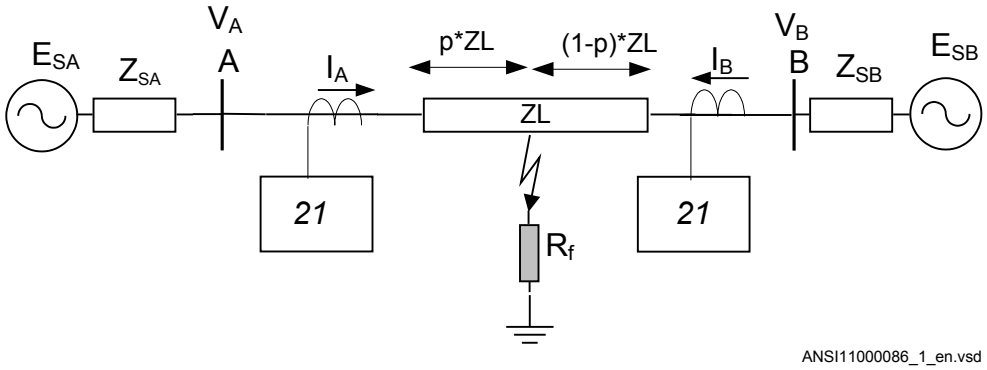

Figure 138: Influence of fault current infeed from remote end.

The effect of fault current infeed from remote end is one of the most driving factors for justify complementary protection to distance protection.

7.4.2.4 Load encroachment

In some cases the load impedance might enter the zone characteristic without any fault on the protected line. The phenomenon is called load encroachment and it might occur when an external fault is cleared and high emergency load is transferred on the protected line. The effect of load encroachment for the mho circle is illustrated to the left in figure 139. The entrance of the load impedance inside the characteristic is of course not allowed and the way to handle this with conventional distance protection is to consider this with the settings, that is, to have a security margin between the distance zone and the minimum load impedance. This has the drawback that it will reduce the sensitivity of the protection, that is, the ability to detect resistive faults.

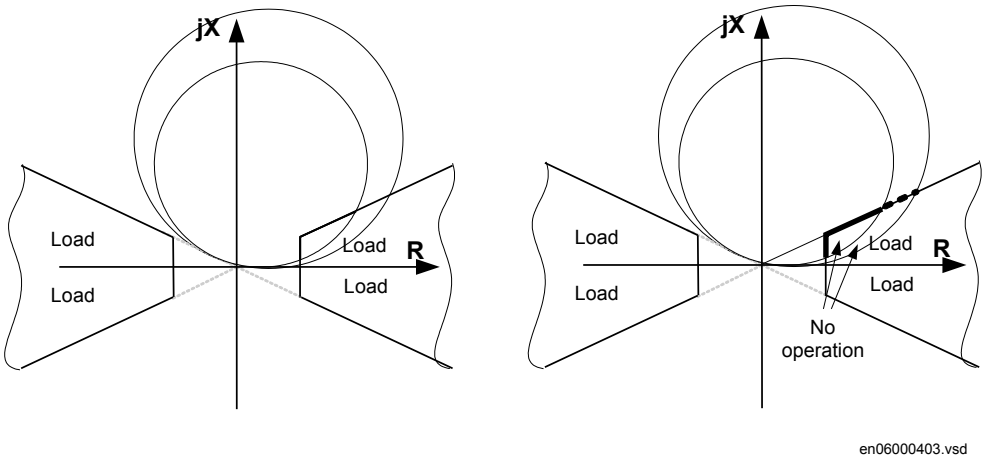

Figure 139: Load encroachment phenomena and shaped load encroachment characteristic

The Faulty phase identification with load encroachment for mho (FMPSPDIS, 21) function shapes the characteristic according to the diagram on the right in figure 139. The load encroachment algorithm will increase the possibility to detect high fault resistances, especially for phase-to-ground faults at remote line end. For example, for a given setting of the load angle *LdAngle* (see figure 140) for the Faulty phase identification with load encroachment for mho function (FMPSPDIS, 21), the zone reach can be expanded according to the diagram on the right in figure 139 given higher fault resistance coverage without risk for unwanted operation due to load encroachment. The part of the load encroachment sector that comes inside the mho circle will not cause a trip if FMPSPDIS (21) is activated for the zone measurement. This is valid in both directions.

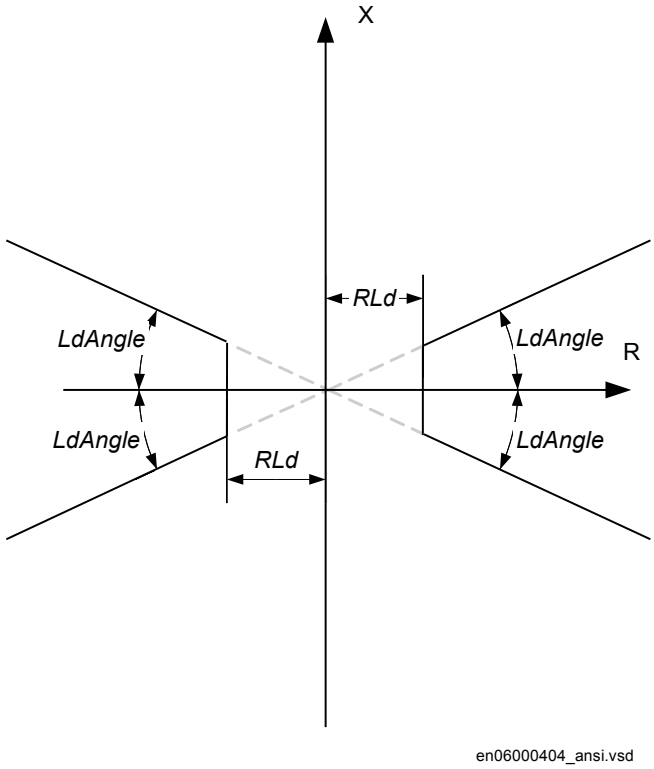

Figure 140: Load encroachment of Faulty phase identification with load encroachment for mho function FMPSPDIS (21) characteristic

The use of the load encroachment feature is essential for long heavy loaded lines, where there might be a conflict between the necessary emergency load transfer and necessary sensitivity of the distance protection. The function can also preferably be used on heavy loaded medium long lines. For short lines the major concern is to get sufficient fault resistance coverage and load encroachment is not a major problem. So, for short lines, the load encroachment function could preferably be switched off.

The main settings of the parameters for load encroachment are done in Faulty phase identification with load encroachment for mho function FMPSPDIS (21). The operation of load encroachment function is always activated. To deactivate the function, setting *LoadEnchMode* should be set off or the setting of *RLdFw* and *RLdRv* must be set to a value much higher than the maximal load impedance.

7.4.2.5 Short line application

The definition of short, medium and long lines is found in IEEE Std C37.113-1999. The length classification is defined by the ratio of the source impedance at the protected line's terminal to the protected line's impedance (SIR). SIR's of about 4 or

greater generally define a short line. Medium lines are those with SIR's greater than 0.5 and less than 4.

In short line applications, the major concern is to get sufficient fault resistance coverage. Load encroachment is not so common. The line length that can be recognized as a short line is not a fixed length; it depends on system parameters such as voltage and source impedance, see table 17.

Table 19: Definition of short and very short line

Line category	Vn 110 kV	Vn 500 kV
Very short line	0.75–3.6 miles	3–15 miles
Short line	4–7 miles	15–30 miles

The use of load encroachment algorithm in Full-scheme distance protection, mho characteristic function (ZMHPDIS, 21) improves the possibility to detect high resistive faults without conflict with the load impedance (see to the right of figure 139).

For very short line applications the underreaching zone 1 can not be used due to that the voltage drop distribution through out the line will be too low causing risk for overreaching.

Load encroachment is normally not a problem for short line applications so the load encroachment function could be switched off meaning *LoadEnchMode = Disabled*. This will increase the possibility to detect resistive close-in faults.

7.4.2.6 Long transmission line application

For long transmission lines the load encroachment will normally be a major concern. It is well known that it is difficult to achieve high sensitivity for phase-to-ground fault at remote end of a long line when the line is heavily loaded.

What can be recognized as long lines with respect to the performance of distance protection is noted in table 20.

Table 20: Definition of long lines

Line category	Vn 110 kV	Vn 500 kV
Long lines	77 km - 99 km	350 km - 450 km
Very long lines	> 99 km	> 450 km

The possibility to use the binary information from the load encroachment algorithm improves the possibility to detect high resistive faults at the same time as the security is

improved (risk for unwanted trip due to load encroachment is eliminated). The possibility to also use the blinder together with the load encroachment algorithm will considerably increase the security but might also lower the dependability since the blinder might cut off a larger part of the operating area of the circle (see to the right of figure 139).

It is recommended to use at least one of the load discrimination functions for long heavy loaded transmission lines.

7.4.2.7 Parallel line application with mutual coupling

General

Introduction of parallel lines in the network is increasing due to difficulties to get necessary area for new lines.

Parallel lines introduce an error in the measurement due to the mutual coupling between the lines. The lines need not to be of the same voltage in order to experience mutual coupling, and some coupling exists even for lines that are separated by 100 meters or more. The reason to the introduced error in measuring due to mutual coupling is the zero sequence voltage inversion that occurs.

It can be shown from analytical calculations of line impedances that the mutual impedances for positive and negative sequence are very small and it is a practice to neglect them.

Mutual coupling effect

The mutual coupling is based on the known induction law, that a current induces a longitudinal voltage in the parallel circuit.

The induced voltage is:

$$V = Z_M \cdot I$$

(Equation 177)

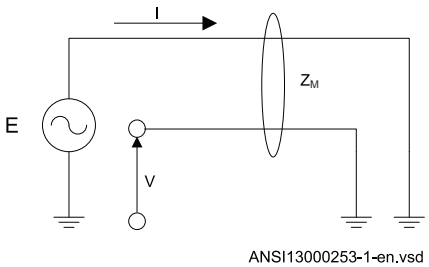

Figure 141: Mutual coupling

Mutual induction on three-phase transmission lines

In case of three phase lines, mutual coupling in the positive and negative sequence components is relatively weak and can be neglected. These are of the order of 5% of the related self-impedance for non-transposed and lower than 3% for transposed lines. The zero-sequence currents are equal and in phase in all the three conductors of the three-phase line. In this case, the three-phase conductors can be replaced by a representative single conductor for each parallel line and the mutual coupling between lines and their ground return wires is then reduced to a single-phase problem.

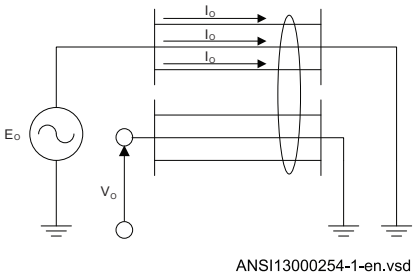

Figure 142: Mutual coupling of two three-phase lines

$$Z_{0m} = \frac{V_0}{I_0} = 3 \cdot Z_M$$

(Equation 178)

Where Z_M is the mutual impedance between two conductors with ground return as defined above. This zero sequence mutual impedance can be as high as 70% of the self-zero sequence impedance of a protected line when the parallel lines are mounted on the same tower. The mutual coupling effect has therefore a strong impact on the ground fault relaying.

It can be shown from analytical calculations of line impedances that the mutual impedances for positive and negative sequence are very small (< 1-2% of the self impedance) and it is a practice to neglect them.

Classes of networks

From an application point-of-view, there are three types of network configurations (classes) which must be considered when making the settings for the protection function.

The different network configuration classes are:

1. Class 1: Parallel line with common positive and zero-sequence network
2. Class 2: Parallel circuits with common positive but isolated or separated zero-sequence network
3. Class 3: Parallel circuits with positive and zero-sequence sources isolated or separated.

One example of class 3 networks could be the mutual coupling between a 400 kV line and rail road overhead lines. This type of mutual coupling is not so common although it exists and is not treated any further in this manual.

The most used configuration is class 1 network: Parallel circuit with common positive and zero-sequence sources. In this type of networks, the parallel transmission lines terminate at common nodes at both ends.

For each type of network class we can have three different topologies; the parallel line can be in service, out of service, out of service and grounded in both ends.

The reach of the distance protection zone 1 will be different depending on the operation condition of the parallel line. It is therefore recommended to use the different setting groups to handle the cases when the parallel line is in operation and out of service and grounded at both ends.

Impact on distance protection

Distance relaying of ph-ph and three-phase faults is not influenced by the parallel line. For protection of phase-to-ground faults, however a measuring error occurs. In principle, this error appears due to the fact that the parallel line ground-current (I_{EP} = 3.I_{0P}) induces a voltage $I_{EP.}$ Z_{0m}/3 in to the fault loop.

The distance relay phase-to-ground units measure:

$$Z = \frac{V_{ph}}{I_{ph} + K_N \cdot I_G}$$

(Equation 179)

Where:

V_{ph}	is phase to ground short circuit voltage at the relay location in the faulted phase
I_{ph}	is short circuit current in the faulted phase

Table continues on next page

I_G	ground current of faulty line
K_N	is ground compensation factor for single circuit set at the relay given by equation

$$K_N = \frac{Z_0 - Z_1}{3 \cdot Z_1}$$

(Equation 180)

The short circuit voltage can be calculated as:

$$V_{ph} = I_{ph} \cdot Z_1 + \frac{Z_0 - Z_1}{3} \cdot I_G + \frac{Z_{0m}}{3} \cdot I_{Gp} = Z_1 (I_{ph} + \frac{Z_0 - Z_1}{3Z_1} \cdot I_G + \frac{Z_{0m}}{3Z_1} \cdot I_{Gp})$$

(Equation 181)

Where I_{Ep} is the ground current in the parallel line.

As explained above, the distance relay phase-to-ground measures:

$$Z = \frac{V_{ph}}{I_{ph} + K_N \cdot I_G}$$

(Equation 182)

$$Z = \frac{V_{ph}}{I_{ph} + K_n \cdot I_G} = Z_1 \cdot \frac{I_{ph} + \frac{Z_0 - Z_1}{3Z_1} \cdot I_G + \frac{Z_{0m}}{3Z_1} \cdot I_{Gp}}{I_{ph} + K_n \cdot I_G}$$

(Equation 183)

Taking earth compensation factor $K_N = \frac{Z_0 - Z_1}{3Z_1}$ for single circuit and $K_{Nm} = \frac{Z_{0m}}{3Z_1}$ impedance measured by distance relay can be written as:

$$Z = Z_1 \left[1 + \frac{K_{Nm} \cdot I_{Gp}}{I_{ph} + K_N \cdot I_G} \right]$$

(Equation 184)

Where:

I_G	ground current of faulty line
I_{GP}	is ground current of the parallel line
Z_1	is line positive sequence impedance
K_N	is earth compensation factor for single circuit set at the relay given by equation
Z_{0m}	is the zero sequence mutual coupling between the faulted and the parallel line

$$K_N = \frac{Z_0 - Z_1}{3 \cdot Z_1}$$

(Equation 185)

$$K_{Nm} = \frac{Z_{0m}}{3 \cdot Z_1}$$

(Equation 186)

From the above it can be deduced:

- Error is proportional to the mutual coupling factor K_{0m}
- The error increases with the parallel line ground current in relation to the relay current
- The relay underreaches when I_{GP} is in phase with $I_{ph} + K_N \cdot I_G$.

For a remote end terminal fault, this underreaching effect can be as high as 25%.

The distance protection zone reaches vary with the switching state of the parallel line configuration. We consider the three most common operation modes:

1. Case 1: Parallel line out of service and earthed at both ends
2. Case 2: Parallel line switched off and not earthed or earthed only at one line end
3. Case 3: Both lines in service.

The reach of the distance protection zone 1 will be different depending on the operation condition of the parallel line.

Compensation of the mutual zero sequence impedance of parallel circuit can be achieved by appropriate selection of zero-sequence compensation factor K_N when parallel line can be in service, out of service, or out of service and grounded at both ends.

Five zone distance protection, mho characteristic function (ZMHPDIS) can compensate for the influence of a zero sequence mutual coupling on the measurement at single phase-to-ground faults in the following two ways, by using:

- Different setting values that influence the ground-return compensation for different distance zones within the same group of setting parameters.
- Different groups of setting parameters for different operating conditions of a protected multi circuit line.

7.4.2.8 Tapped line application

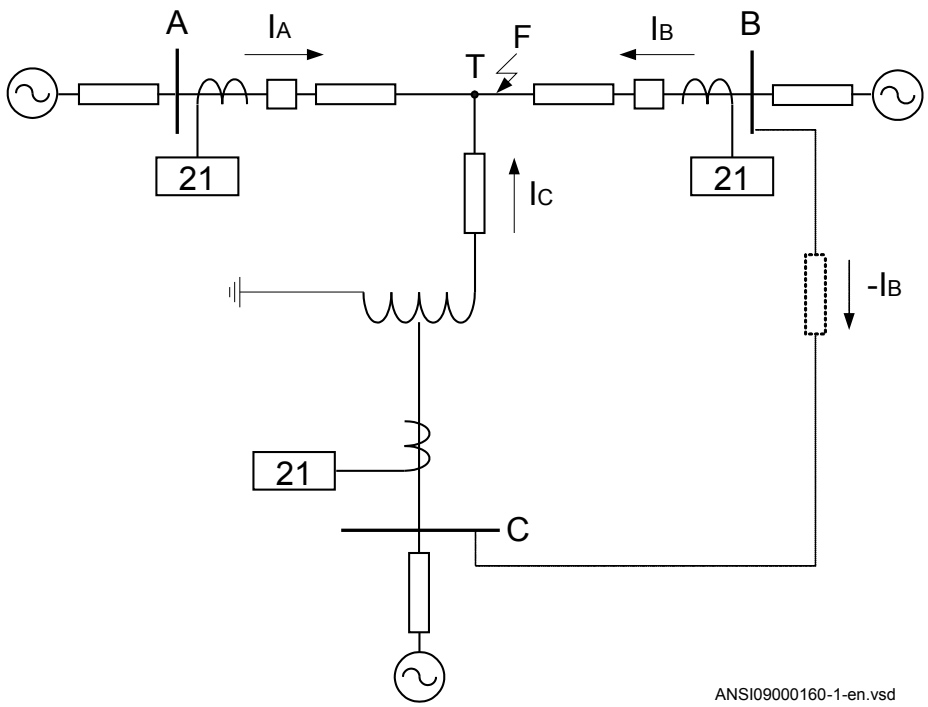

Figure 143: Example of tapped line with Auto transformer

This application gives rise to similar problem that was highlighted in section "Fault infeed from remote end", that is, increased measured impedance due to fault current infeed. For example, for faults between the T point and B station the measured impedance at A and C will be

$$\bar{Z}_A = \bar{Z}_{AT} + \frac{\bar{I}_A + \bar{I}_C}{\bar{I}_A} \cdot \bar{Z}_{TF}$$

(Equation 187)

$$\overline{Z}_C = \overline{Z}_{Trf} + \left(\overline{Z}_{CT} + \frac{I_A + I_C}{I_C} \cdot \overline{Z}_{TF} \right) \cdot \left(\frac{V2}{V1} \right)^2$$

(Equation 188)

where

Z_{AT} and Z_{CT}	is the line impedance from the A respective C station to the T point.
I_A and I_C	is fault current from A respective C station for fault between T and B.
V2/V1	Transformation ratio for transformation of impedance at V1 side of the transformer to the measuring side V2 (it is assumed that current and voltage distance function is taken from V2 side of the transformer).

For this example with a fault between T and B, the measured impedance from the T point to the fault will be increased by a factor defined as the sum of the currents from T point to the fault divided by the IED current. For the IED at C, the impedance on the high voltage side V1 has to be transferred to the measuring voltage level by the transformer ratio.

Another complication that might occur depending on the topology is that the current from one end can have a reverse direction for fault on the protected line. For example, for faults at T the current from B might go in reverse direction from B to C depending on the system parameters (see the dotted line in figure 143), given that the distance protection in B to T will measure wrong direction.

In three-end application, depending on the source impedance behind the IEDs, the impedances of the protected object and the fault location, it might be necessary to accept zone 2 trip in one end or sequential trip in one end.

Generally for this type of application it is difficult to select settings of zone 1 that both gives overlapping of the zones with enough sensitivity without interference with other zone 1 settings, that is, without selectivity conflicts. Careful fault calculations are necessary to determine suitable settings and selection of proper scheme communication.

7.4.3 Setting guidelines

7.4.3.1 General

The settings for Full-scheme distance protection, mho characteristic function (ZMHPDIS) are done in primary values. The instrument transformer ratio that has been set for the analog input card is used to automatically convert the measured secondary input signals to primary values used in ZMHPDIS.

The following basics should be considered, depending on application, when doing the setting calculations:

- Errors introduced by current and voltage instrument transformers, particularly under transient conditions.
- Inaccuracies in the line zero-sequence impedance data, and their effect on the calculated value of the ground-return compensation factor.
- The effect of infeed between the IED and the fault location, including the influence of different Z_0/Z_1 ratios of the various sources.
- The phase impedance of non transposed lines is not identical for all fault loops. The difference between the impedances for different phase-to-ground loops can be as large as 5-10% of the total line impedance.
- The effect of a load transfer between the terminals of the protected line, the fault resistance is considerable and the effect must be recognized.
- Zero-sequence mutual coupling from parallel lines.

The setting values of all parameters that belong to ZMHPDIS must correspond to the parameters of the protected line and be coordinated to the selectivity plan for the network.

Use different setting groups for the cases when the parallel line is in operation, out of service and not grounded and out of service and grounded in both ends. In this way it is possible to optimize the settings for each system condition.

When Directional impedance element for mho characteristic (ZDMRDIR, 21D) is used together with Fullscheme distance protection, mho characteristic (ZMHPDIS) the following settings for parameter *DirEvalType* in ZDMRDIR is vital:

- alternative *Comparator* is strongly recommended
- alternative *Imp/Comp* should generally not be used
- alternative Impedance should not be used. This alternative is intended for use together with Distance protection zone, quadrilateral characteristic (ZMQPDIS)

7.4.3.2 Setting of zone 1

The zone 1 distance elements must be set to underreach a protected circuit to ensure external fault security.

The different errors mentioned earlier usually require a limitation of the underreaching zone (normally zone 1) to 75 - 90% of the protected line.

In case of parallel lines, consider the influence of the mutual coupling according to section “Setting of zones for parallel line application” and select the case(s) / options that are valid in the particular application.

By proper setting it is possible to compensate for the cases when the parallel line is in operation, out of service and not earthed and out of service and earthed in both ends.

7.4.3.3 Setting of zone 2

Zone 2 distance elements must be set according to the following criteria:

- Zone 2 should overreach all terminals of the protected circuit by an acceptable margin (typically 20% of highest impedance seen) for all fault conditions and for all intended modes of system operation
- As far as possible, zone 2 reach should be less than zone 1 coverage of all adjacent lines to minimize the required zone 2 time delay setting.

It is necessary to consider the underreaching effects of zero sequence mutual coupling on ground fault impedance measurement when setting the reach of zone 2 distance protection to meet the primary reach criterion for parallel circuits.

7.4.3.4 Setting of zone 3

Zone 3 distance elements must be set according to the following criteria where possible:

- Zone 3 should overreach the remote terminal of the longest adjacent line by an acceptable margin (typically 20% of highest impedance seen) for all fault conditions and in feed conditions associated with all intended modes of system operation
- Zone 3 reach should be less than the zone 2 protection coverage of the shortest adjacent transmission circuit, and it should not see through power transformers into distribution systems in order to minimize the required zone 3 time delay setting.

7.4.3.5 Setting of overreaching zone

The first overreaching zone (normally zone 2) must detect faults on the whole protected line. Considering the different errors that might influence the measurement in the same way as for zone 1, it is necessary to increase the reach of the overreaching zone to at least 120% of the protected line. The zone 2 reach can be even higher if the fault infeed from adjacent lines at remote end is considerable higher than the fault current at the IED location.

The setting shall generally not exceed 80% of the following impedances:

- The impedance corresponding to the protected line, plus the first zone reach of the shortest adjacent line.
- The impedance corresponding to the protected line, plus the impedance of the maximum number of transformers operating in parallel on the bus at the remote end of the protected line.

If the requirements in the bullet list above gives a zone 2 reach that gives non-selectivity between the overreaching zone and the shortest outgoing line at the remote end, the time delay of zone 2 must be increased by approximately 200ms to avoid unwanted operation in cases when the telecommunication for the short adjacent line at remote end is down during faults. The zone 2 must not be reduced below 120% of the protected line section. The whole line must be covered under all conditions.

The requirement that the zone 2 shall not reach more than 80% of the shortest adjacent line at remote end is highlighted in the example below.

If a fault occurs at point F (see figure 144, also for the explanation of all abbreviations used), the IED at point A senses the impedance:

$$\overline{Z}_{AF} = \frac{\overline{V}_A}{\overline{I}_A} = \overline{Z}_{AC} + \frac{\overline{I}_A + \overline{I}_C}{\overline{I}_A} \cdot \overline{Z}_{CF} + \frac{\overline{I}_A + \overline{I}_C + \overline{I}_B}{\overline{I}_A} \cdot R_F = \overline{Z}_{AC} + \left(1 + \frac{\overline{I}_C}{\overline{I}_A}\right) \cdot \overline{Z}_{CF} + \left(1 + \frac{\overline{I}_C + \overline{I}_B}{\overline{I}_A}\right) \cdot R_F$$

(Equation 189)

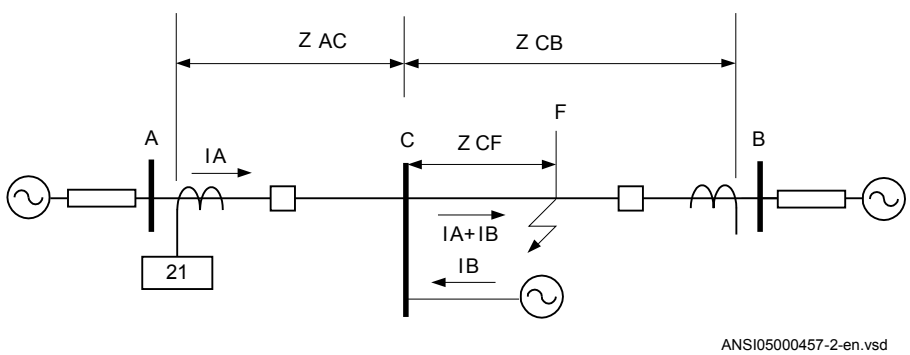

Figure 144: Setting of overreaching zone

7.4.3.6 Setting of reverse zone

The reverse zone is applicable for purposes of scheme communication logic, current reversal logic, weak-end infeed logic, and so on. The same applies to the back-up protection of the bus bar or power transformers. It is necessary to secure, that it always covers the overreaching zone, used at the remote line terminal for the telecommunication purposes.

Consider the possible enlarging factor that might exist due to fault infeed from adjacent lines. Equation 190 can be used to calculate the reach in reverse direction when the zone is used for blocking scheme, weak-end infeed, and so on.

$$Zrev \geq 1.2 \cdot \left(ZL - Z2rem \right)$$

(Equation 190)

Where:

ZL is the protected line impedance

Z2rem is zone 2 setting at remote end of protected line.

In some applications it might be necessary to consider the enlarging factor due to fault current infeed from adjacent lines in the reverse direction in order to obtain certain sensitivity.

Parallel line in service

Setting of zones for parallel line application

The distance protection zone reaches vary with the switching state of the parallel line configuration. Below the configurations and the corresponding formulas for the reach calculation are given for the most important cases. In these equations, **x** stands for ratio of distance to fault and length of the line, and **Z** stands for the impedance seen by the relay.

Case 1: Parallel line switched-off and earthed at both ends:

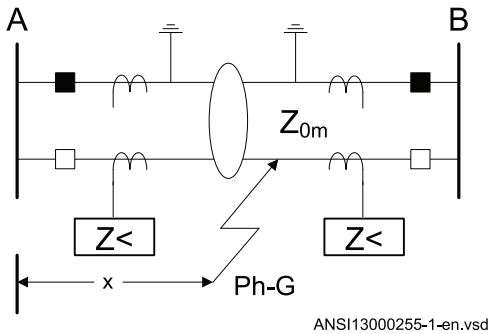

Figure 145: The parallel line is out of service and earthed

$$Z = x \cdot Z_1 \cdot \frac{1 + (\frac{Z_0 - Z_1}{3Z_1} - K_{Nm} \frac{Z_{0m}}{Z_0})}{1 + K_N}$$

(Equation 191)

Where:

Z_1	is line positive sequence impedance
K_N	is earth compensation factor for single circuit set at the relay given by equation
Z_{0m}	is the zero sequence mutual coupling between the faulted and the parallel line
x	is the ratio of distance to fault and length of the line

$$K_N = \frac{Z_0 - Z_1}{3 \cdot Z_1}$$

(Equation 192)

$$K_{Nm} = \frac{Z_{0m}}{3 \cdot Z_1}$$

(Equation 193)

Case 2: Parallel line switched off and not earthed or earthed at one line end

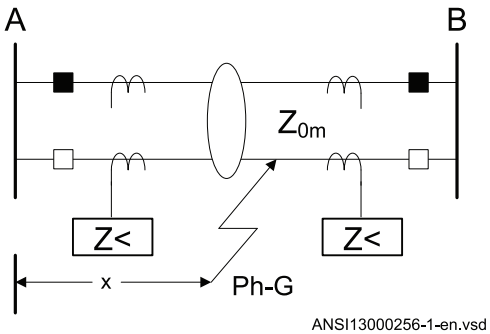

Figure 146: Parallel line is out of service and not earthed

$$Z = x \cdot Z_1 \cdot \frac{1 + \frac{Z_0 - Z_1}{3Z_1}}{1 + K_N}$$

(Equation 194)

Case 3: Both lines in service

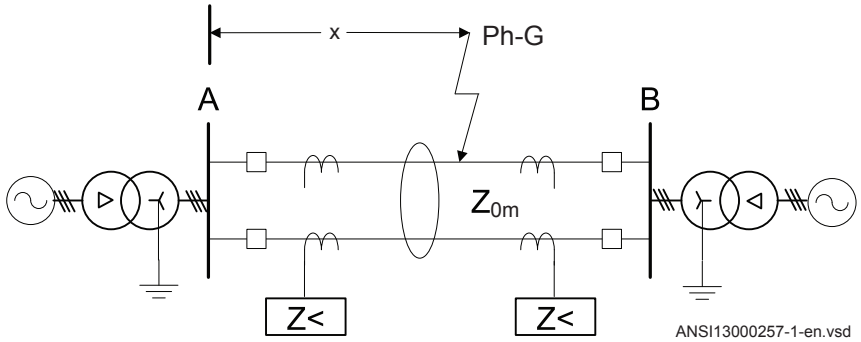

Figure 147: Class 1, parallel line in service

$$Z = x \cdot Z_1 \cdot \frac{1 + \frac{Z_0 - Z_1}{3 \cdot Z_1} + \frac{x}{2 - x} K_{Nm}}{1 + K_N}$$

(Equation 195)

Some observations from above equations for case 1, 2, and 3

In case 1, the lowest impedance is measured, that is, the highest reach occurs due to the parallel connection of the zero-sequence systems of both lines.

In case 3, the highest impedance is measured, which corresponds to the shortest reach.

The mutual impedance will influence the distance measurement of ground faults and cause either an extension or a reduction of the reach relative to the set reach.

The maximum overreach will occur when the parallel line is out of service and grounded at both ends. During a ground fault, a counteracting current is induced in the grounded line. The counter current will reduce the apparent zero sequence impedance seen by the relay in the faulty line.

When both lines are in service under normal generating conditions, the distance relay will underreach, but in the case of an extremely weak source behind the relay, an overreach may occur. However, this overreach will not cause the relay to operate for faults beyond the end of the protected line.

From the operational point-of-view, an extension of the zone 1 beyond the end of the line is not acceptable.

Alternatives for underreaching and overreaching zones

As stated earlier, the distance protection within the IED can compensate for the influence of a zero sequence mutual coupling on the measurement at single phase-to-ground faults in the following ways, by using:

- **Alternative 1:** The possibility of different setting values that influence the ground-return compensation for different distance zones within the same group of setting parameters
- **Alternative 2**: Different groups of setting parameters for different operating conditions of a protected multi circuit line.

Alternative 1: Different kN setting values within the same setting group

Setting of underreaching zone

The set zone should fulfill two criteria:

- It should avoid overreach beyond the remote line terminal in case 1
- It should cover as much of the line as possible, at least 50% plus a safety margin in the most unfavorable case 3.

A possible setting strategy is to set the zone to for example 85% of line length for case 1 and check afterwards if sufficient reach exists in the cases 2 and 3.

Setting of zone 1

For case 1, parallel line having both ends grounded, zone 1 overreach caused by the grounded parallel line can be avoided by the K_N factor setting for zone 1 suitably.

The compensation factor K_N compensates for the additional loop impedance under ground fault conditions. To eliminate the overreach caused by the grounded parallel line, set the K_{N1} for the zone 1 as:

$$K_{N1} = \frac{Z_0 - Z_1}{3Z_1} - K_{Nm}\frac{Z_{0m}}{Z_0}$$

(Equation 196)

This K_{N1} setting for zone 1 only affects the reach for ground faults while the reach for two and three-phase faults are unaffected.

For case 2, when the parallel line is out of operation but not grounded, the zone 1 nominal reach for ground faults is reduced. The measured impedance can be calculated:

$$Z = x \cdot Z_1 \cdot \frac{1 + \frac{Z_0 - Z_1}{3Z_1}}{1 + K_{N1}}$$

(Equation 197)

The reduced reach must be taken into account when using a permissive underreaching scheme.

For case 3, when the parallel line is in service, the reach for ground faults can further reduce because of the mutual coupling. The measured impedance can be calculated:

$$Z = x \cdot Z_1 \cdot \frac{1 + \frac{Z_0 - Z_1}{3Z_1} + \frac{x}{2 - x} K_{Nm}}{1 + K_{N1}}$$

(Equation 198)

This reduction of the reach is most pronounced with no in-feed in the line terminal nearest fault. When the reach is reduced at one line end, it is extended in the opposite one. Therefore, this reach reduction does not affect a permissive underreaching scheme.

Setting of overreaching zone

Zone 1 is not allowed to overreach under any condition. Overreaching zones 2 and 3 are not allowed to underreach the whole line under any condition.

Setting of zone 2

The overreaching zone 2 for backup or permissive overreaching distance protection schemes must at least safely cover 100% of the line with a safety margin of about 20%. This must be guaranteed for the most unfavorable condition of case 3.

The ground fault compensation factor must be adjusted to the case of parallel line in service (case 3) where the highest ground fault impedance occurs.

$$K_{N2} = \frac{Z_0 - Z_1}{3Z_1} - K_{Nm}$$

(Equation 199)

For case 1, the measured impedance can be calculated by the following expression:

$$Z = x \cdot Z_1 \cdot \frac{1 + (\frac{Z_0 - Z_1}{3Z_1} - K_{Nm} \frac{Z_{0m}}{Z_0})}{1 + K_{N2}}$$

(Equation 200)

For case 2, the measured impedance can be calculated by the following expression:

$$Z = x \cdot Z_1 \cdot \frac{1 + \frac{Z_0 - Z_1}{3Z_1}}{1 + K_{N2}}$$

(Equation 201)

For both case 1 and 2, the overreach would be much higher. For case 3, the function measures the correct impedance.

The normal influence of infeeds is to be added to these influences of the mutual coupling for setting of remote backup zones.

Setting of zone 3

The reach of zone 3 is affected as well, but when zone is normally set with sufficient margin to always overreach the remote line end, K_{N3} for zone 3 can be set as for a single line, that is:

$$K_{N3} = \frac{Z_0 - Z_1}{3Z_1}$$

(Equation 202)

Alternative 2: Different groups of setting parameters for different operating conditions of a protected multi circuit line

Different group of setting parameters can be used for the three cases:

- Parallel line switched off and grounded at both ends
- Parallel line switched off and not grounded or grounded at only one end
- Both lines in service.

With this method of setting the zero sequence compensation factor K_N can for zone 1 and zone 2 be even better adapted for the real system conditions.

The table describes ground fault compensation settings to be adopted for different groups.

Table 21: Different groups of settings

Group	Operation mode	Zone 1 and Zone 2	Zone 3 and Reverse Zone
Group1	Case 1: Parallel line switched off and grounded at both ends	$K_{N1} = \frac{Z_0 - Z_1}{3Z_1} - K_{Nm}\frac{Z_{0m}}{Z_0}$	$K_N = \frac{Z_0 - Z_1}{3 \cdot Z_1}$
Group2	Case 2: Parallel line switched off and not grounded or grounded at only one end	$K_N = \frac{Z_0 - Z_1}{3 \cdot Z_1}$	$K_N = \frac{Z_0 - Z_1}{3 \cdot Z_1}$
Group3	Both lines in service	$K_N = \frac{Z_0 - Z_1}{3Z_1} - K_{Nm}$	$K_N = \frac{Z_{0L} - Z_L}{3Z_L}$

For a discussion on other options of settings, refer to CIGRE SC34 report, WG-04 November 1991 “Application guide on protection of complex transmission network configuration”.

7.4.3.7 Load impedance limitation, without load encroachment function

The following instruction is valid when the load encroachment function or blinder function is not activated (*BlinderMode=Disabled*).The load encroachment function will not be activated if RLdFw and RLdRv is set to a value higher than expected minimal load impedance. If the load encroachment or blinder function is to be used for all or some of the measuring zones, the load limitation for those zones according to this chapter can be omitted. Check the maximum permissible resistive reach for any zone to ensure that there is a sufficient setting margin between the relay boundary and the minimum load impedance. The minimum load impedance (Ω/phase) is calculated as:

$$Zload\min = \frac{V^2}{S}$$

(Equation 203)

Where:

V is the minimum phase-to-phase voltage in kV

S is the maximum apparent power in MVA.

The load impedance [Ω/phase] is a function of the minimum operation voltage and the maximum load current:

$$Zload = \frac{V_{\min}}{\sqrt{3} \cdot \mathrm{I}_{\max}}$$

(Equation 204)

Minimum voltage V_{min} and maximum current I_{max} are related to the same operating conditions. Minimum load impedance occurs normally under emergency conditions.

To avoid load encroachment for the phase-to-ground measuring elements, the set impedance reach of any distance protection zone must be less than 80% of the minimum load impedance.

For setting of the ground-fault loop, the following formula can be used:

$$ZPG \le 1.6 \cdot \frac{|Z_{LOAD}|}{\sqrt{2(1-\cos(\beta))}}$$

(Equation 205)

where:

Z_{load} = magnitude of minimum load impedance

ZPG = $180°-2\cdot\gamma = 180°-2(ArgPG-\Theta_{Load})$

The formula is derived by trigonometric analyze of the figure 148. The length of the vector from the origin O to the point F on the circle is defined by the law of cosine. The result gives the maximum diameter (RFPE) for which the load impedance touch the circle with the given load condition. Use an extra margin of 20% to give sufficient distance between the calculated minimum load impedance and relay boundary.

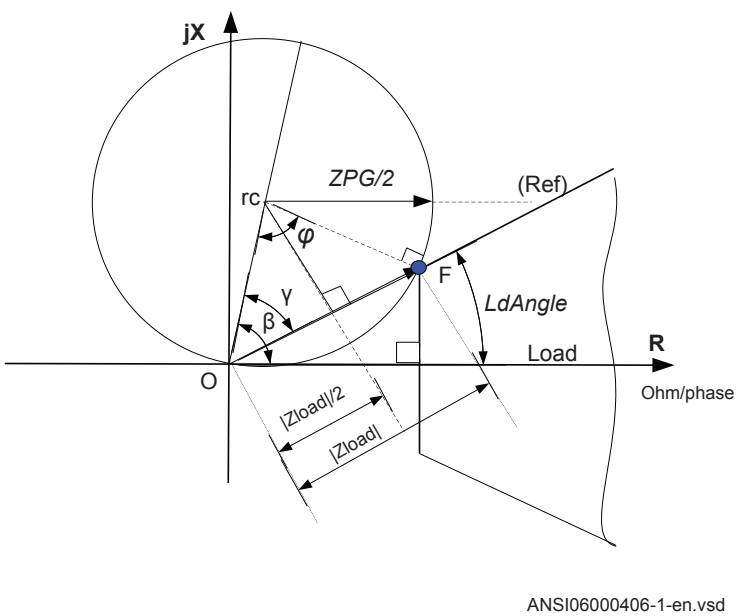

Figure 148: Definition of the setting condition to avoid load encroachment for ground-fault loop

The maximum setting for phase-to-phase fault can be defined by trigonometric analyze of the same figure 148. The formula to avoid load encroachment for the phase-to-phase measuring elements will thus be according to equation 206.

$$ZPP \le 1.6 \cdot \frac{\left|Z_{Load}\right|}{\sqrt{2 \cdot (1 - \cos(\varphi PP))}}$$

(Equation 206)

where:

$\varphi PP = 180° - 2 \cdot (ArgPP - \Theta_{Load})$

All this is applicable for all measuring zones when no power swing detection element or blinder is activated for the protection zones. Use an additional safety margin of approximately 20% in cases when a power swing detection element is in the protection scheme, refer to the description of the power swing detection function.

7.4.3.8 Load impedance limitation, with load encroachment function activated

The parameters for load encroachment shaping of the characteristic are found in the description of Faulty phase identification with load encroachment for mho (FMPSPDIS), refer to section "Load encroachment characteristics".

7.4.3.9 Setting of minimum operate currents

The operation of the distance function will be blocked if the magnitude of the currents is below the set value of the parameter *IMinPUPP* and *IMinPUPG*.

The default setting of *IMinOpPP* and *IMinPUPG* is 20% of *IBase* where *IBase* is the chosen base current for the analog input channels. The values have been proven in practice to be suitable in most of the applications. However, there might be applications where it is necessary to increase the sensitivity by reducing the minimum operate current down to 10% of *IBase*.

The minimum operate fault current is automatically reduced to 75% of its set value, if the distance protection zone has been set for the operation in reverse direction.

7.4.3.10 Setting of directional mode

Setting of the directional mode is by default set to forward by setting the parameter *DirModeSel* to *Forward*.

The selection of *Offset mho* can be used for sending block signal in blocking teleprotection scheme, switch onto fault application and so on.

The *Reverse* mode might be use in comparison schemes where it is necessary to absolute discriminate between forward and reverse fault.

7.4.3.11 Setting of direction for offset mho

If offset mho has been selected, one can select if the offset mho shall be *Non-Directional*, *Forward* or *Reverse* by setting the parameter *OfffsetMhoDir*.

When forward or reverse operation is selected, then the operation characteristic will be cut off by the directional lines used for the mho characteristic. The setting is by default set to *Non-Directional*.

7.4.3.12 Setting of timers for distance protection zones

The required time delays for different distance protection zones are independent of each other. Distance protection zone 1 can also have a time delay if so required for selectivity reasons. One can set the time delays for all zones in a range of 0 to 60 seconds. The tripping function of each particular zone can be inhibited by setting the corresponding *Operation* parameter to *OffDisable-Zone*.

Different time delays are possible for the phase-to-ground*tLG* and for the phase-to-phase *tPP* measuring loops in each distance protection zone separately, to further increase the total flexibility of a distance protection.

In the case of evolving faults or momentary current transformer saturation conditions, the pick up of the zones may get delayed. Zone timer logic improves the operating time in such conditions. The zone timer logic can be set using the parameter *ZnTimerSel*. The triggering signal of phase-to-ground and phase-to-phase timers can be selected using *ZnTimerSel*.

7.5 Full-scheme distance protection, quadrilateral for earth faults ZMMPDIS (21), ZMMAPDIS (21)

7.5.1 Identification

Function description	IEC 61850 identification	IEC 60617 identification	ANSI/IEEE C37.2 device number
Fullscheme distance protection, quadrilateral for earth faults (zone 1)	ZMMPDIS	Z <	21
Fullscheme distance protection, quadrilateral for earth faults (zone 2-5)	ZMMAPDIS	Z <	21

7.5.2 Application

7.5.2.1 Introduction

Sub transmission networks are being extended and often become more and more complex, consisting of a high number of multi-circuit and/or multi terminal lines of very different lengths. These changes in the network will normally impose more stringent demands on the fault clearing equipment in order to maintain an unchanged or increased security level of the power system.

The distance protection function in IED is designed to meet basic requirements for application on transmission and sub transmission lines (solid grounded systems) although it also can be used on distribution levels.

7.5.2.2 System grounding

The type of system grounding plays an important roll when designing the protection system. In the following some hints with respect to distance protection are highlighted.

Solid grounded networks

In solid grounded systems the transformer neutrals are connected solidly to ground without any impedance between the transformer neutral and ground.

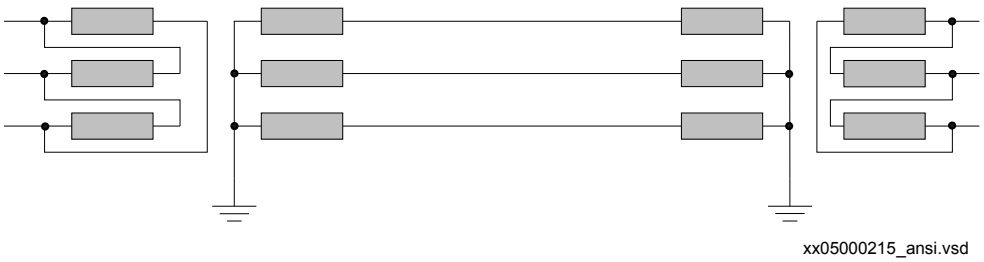

Figure 149: Solidly grounded network

The ground fault current is as high or even higher than the short-circuit current. The series impedances determine the magnitude of the ground fault current. The shunt admittance has very limited influence on the ground fault current. The shunt admittance may, however, have some marginal influence on the ground fault current in networks with long transmission lines.

The ground fault current at single phase-to-ground in phase L1 can be calculated as equation207:

$$3I_0 = \frac{3 \cdot V_A}{Z_1 + Z_2 + Z_0 + 3Z_f} = \frac{V_A}{Z_1 + Z_N + Z_f}$$

(Equation 207)

Where:

VA	is the phase-to-ground voltage (kV) in the faulty phase before fault
Z1	is the positive sequence impedance (Ω/phase)
Z2	is the negative sequence impedance (Ω/phase)
Z0	is the zero sequence impedance (Ω/phase)
Zf	is the fault impedance (Ω), often resistive
ZN	is the ground return impedance defined as (Z0-Z1)/3

The voltage on the healthy phases is generally lower than 140% of the nominal phase-to-ground voltage. This corresponds to about 80% of the nominal phase-to-phase voltage.

The high zero sequence current in solid grounded networks makes it possible to use impedance measuring technique to detect ground fault. However, distance protection has limited possibilities to detect high resistance faults and should therefore always be complemented with other protection function(s) that can carry out the fault clearance in those cases.

Effectively grounded networks

A network is defined as effectively grounded if the ground fault factor fe is less than 1.4. The ground fault factor is defined according to equation 43.

$$f_e = \left| \frac{V_{max}}{V_{pn}} \right|$$

(Equation 208)

Where:

V_{max}	is the highest fundamental frequency voltage on one of the healthy phases at single phase-to-ground fault.
V_{pn}	is the phase-to-ground fundamental frequency voltage before fault.

Another definition for effectively grounded network is when the following relationships between the symmetrical components of the network impedances are valid, see equation 209 and equation 210.

$$X_0 \leq 3 \cdot X_1$$

(Equation 209)

$$R_0 \leq X_1$$

(Equation 210)

The magnitude of the ground fault current in effectively grounded networks is high enough for impedance measuring element to detect fault. However, in the same way as for solid grounded networks, distance protection has limited possibilities to detect high resistance faults and should therefore always be complemented with other protection function(s) that can carry out the fault clearance in this case.

High impedance grounded networks

In high impedance networks the neutral of the system transformers are connected to the ground through high impedance, mostly a reactance in parallel with a high resistor.

This type of network is many times operated in radial, but can also be found operating meshed.

Typically, for this type of network is that the magnitude of the ground fault current is very low compared to the short circuit current. The voltage on the healthy phases will get a magnitude of √3 times the phase voltage during the fault. The zero sequence voltage (3U0) will have the same magnitude in different places in the network due to low voltage drop distribution.

The magnitude of the total fault current can be calculated according to the formula below:

$$3I_0 = \sqrt{I_R^2 + \left(I_L - I_C\right)^2}$$

(Equation 211)

Where:

3I0	is the ground-fault current (A)
IR	is the current through the neutral point resistor (A)
IL	is the current through the neutral point reactor (A)
IC	is the total capacitive ground-fault current (A)

The neutral point reactor is normally designed so that it can be tuned to a position where the reactive current balances the capacitive current from the network that is:

$$\omega L = \frac{1}{3 \cdot \omega \cdot C}$$

(Equation 212)

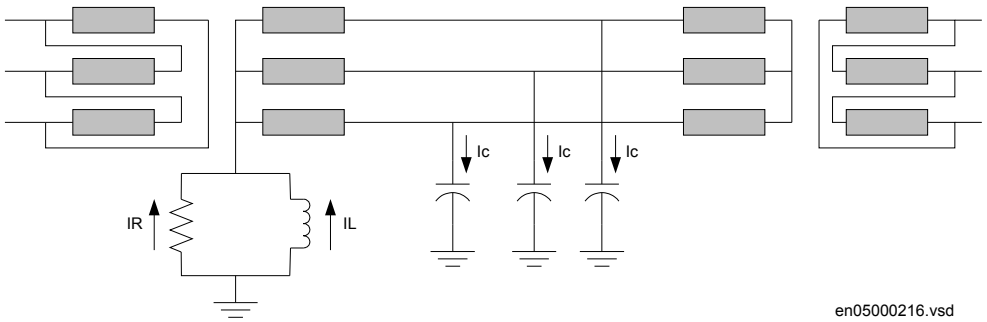

Figure 150: High impedance grounding network

The operation of high impedance grounded networks is different compare to solid grounded networks where all major faults have to be cleared very fast. In high impedance grounded networks, some system operators do not clear single phase-to-ground faults immediately; they clear the line later when it is more convenient. In case of cross country faults, many network operators want to selectively clear one of the two ground-faults. To handle this type phenomena a separate function called Phase preference logic (PPLPHIZ) is needed, which is not common to be used in transmission applications.

In this type of network, it is mostly not possible to use distance protection for detection and clearance of ground-faults. The low magnitude of the ground-fault current might not give start of the zero sequence measurement element or the sensitivity will be too low for acceptance. For this reason a separate high sensitive ground-fault protection is necessary to carry out the fault clearance for single phase-to-ground fault.

7.5.2.3 Fault infeed from remote end

All transmission and most all sub transmission networks are operated meshed. Typical for this type of network is that we will have fault infeed from remote end when fault occurs on the protected line. The fault infeed will enlarge the fault impedance seen by the distance protection. This effect is very important to keep in mind when both planning the protection system and making the settings.

With reference to figure 151, we can draw the equation for the bus voltage Va at left side as:

$$\overline{V}_A = \overline{I}_A \cdot p \cdot Z_L + (\overline{I}_A + \overline{I}_B) \cdot R_f$$

(Equation 213)

If we divide Va by IA we get Z present to the IED at A side

$$\overline{Z}_A = \frac{\overline{V}_a}{\overline{I}_A} = p \cdot \overline{Z}_L + \frac{\overline{I}_A + \overline{I}_B}{\overline{I}_A} \cdot R_f$$

(Equation 214)

The infeed factor (IA+IB)/IA can be very high, 10-20 depending on the differences in source impedances at local and remote end.

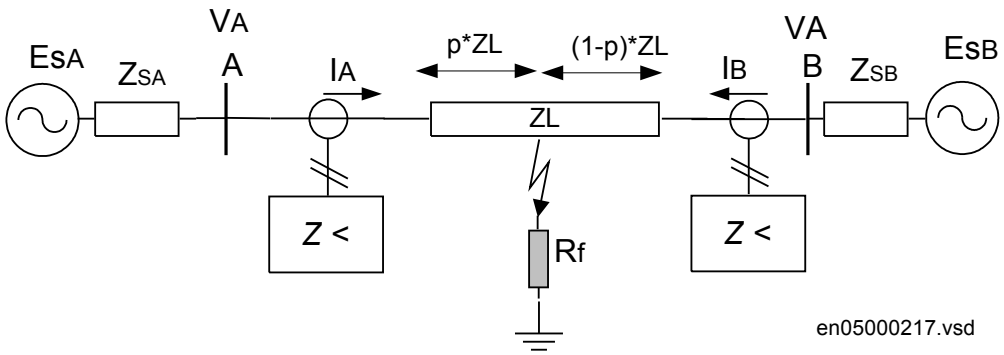

Figure 151: Influence of fault infeed from remote end.

The effect of fault current infeed from remote end is one of the most driving factors for justify complementary protection to distance protection.

7.5.2.4 Load encroachment

In some cases the load impedance might enter the zone characteristic without any fault on the protected line. The phenomenon is called load encroachment and it might occur when an external fault is cleared and high emergency load is transferred on the protected line. The effect of load encroachment is illustrated to the left in figure 152. The entrance of the load impedance inside the characteristic is of cause not allowed and the way to handle this with conventional distance protection is to consider this with the settings that is, to have a security margin between the distance zone and the minimum load impedance. This has the drawback that it will reduce the sensitivity of the protection that is, the ability to detect resistive faults.

The IED has a built in function which shapes the characteristic according to the right figure 4. The load encroachment algorithm will increase the possibility to detect high fault resistances, especially for line to ground faults at remote end. For example for a

given setting of the load angle *LdAngle* for the load encroachment function, the resistive blinder for the zone measurement can be expanded according to the right in figure 152 given higher fault resistance coverage without risk for unwanted operation due to load encroachment. This is valid in both directions.

The use of the load encroachment feature is essential for long heavy loaded lines, where there might be a conflict between the necessary emergency load transfer and necessary sensitivity of the distance protection. ZMMPDIS (21) function can also preferably be used on heavy loaded medium long lines. For short lines the major concern is to get sufficient fault resistance coverage and load encroachment is not a major problem. So, for short lines, the load encroachment function could preferable be switched off.

The settings of the parameters for load encroachment are done in the Phase selection with load enchroachment, quadrilateral characteristic (FDPSPDIS,21).

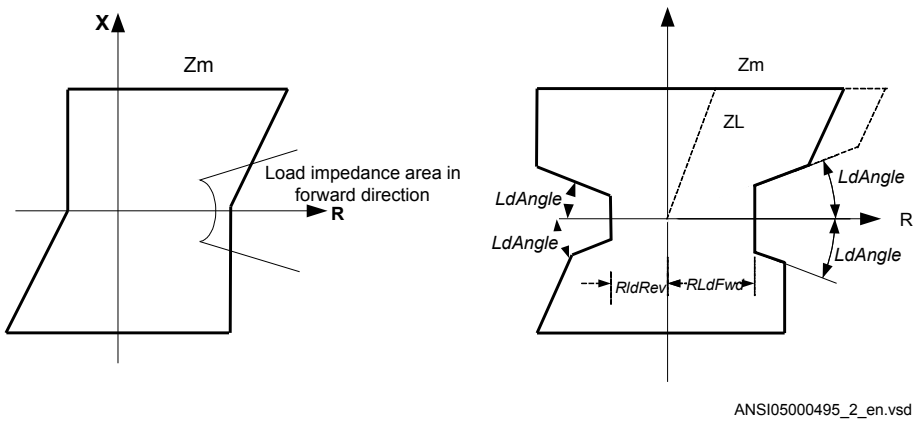

Figure 152: Load encroachment phenomena and shaped load encroachment characteristic

7.5.2.5 Short line application

In short line applications, the major concern is to get sufficient fault resistance coverage. Load encroachment is not so common. The line length that can be recognized as a short line is not a fixed length; it depends on system parameters such as voltage and source impedance, see table "Short line application".

Table 22: Definition of short and very short line

Line category	Vn	Vn
	110 kV	500 kV
Very short line Short line	0.75-3.5 miles	3-15 miles
	4-7 miles	15-30 miles

The possibility in IED to set resistive and reactive reach independent for positive and zero sequence fault loops and individual fault resistance settings for phase-to-phase and phase-to-ground fault together with load encroachment algorithm improves the possibility to detect high resistive faults without conflict with the load impedance, see figure 152.

For very short line applications the underreaching zone 1 can not be used due to that the voltage drop distribution through out the line will be too low causing risk for overreaching.

Load encroachment is normally no problems for short line applications so the load encroachment function could be switched off (*OperationLdCmp = Off*). This will increase the possibility to detect resistive close-in faults.

7.5.2.6 Long transmission line application

For long transmission lines the margin to the load impedance that is, to avoid load encroachment, will normally be a major concern. It is difficult to achieve high sensitivity for phase-to-ground fault at remote end of a long lines when the line is heavy loaded.

The definition of long lines with respect to the performance of distance protection is noted in table 23.

Table 23: Definition of long lines

Line category	Vn	Vn
	110 kV	500 kV
Long lines	45-60 miles	200–250 miles
Very long lines	>60 miles	>250 miles

As mentioned in the previous chapter, the possibility in IED to set resistive and reactive reach independent for positive and zero sequence fault loops and individual fault resistance settings for phase-to-phase and phase-to-ground fault together with load encroachment algorithm improves the possibility to detect high resistive faults at the same time as the security is improved (risk for unwanted trip due to load encroachment is eliminated).

7.5.2.7 Parallel line application with mutual coupling

General

Introduction of parallel lines in the network is increasing due to difficulties to get necessary area for new lines.

Parallel lines introduce an error in the measurement due to the mutual coupling between the parallel lines. The lines need not to be of the same voltage in order to experience mutual coupling, and some coupling exists even for lines that are separated by 100 meters or more. The reason to the introduced error in measuring due to mutual coupling is the zero sequence voltage inversion that occurs.

It can be shown from analytical calculations of line impedances that the mutual impedances for positive and negative sequence are very small (< 1-2%) of the self impedance and it is practice to neglect them.

From an application point of view there exists three types of network configurations (classes) that must be considered when making the settings for the protection function. Those are:

1. Parallel line with common positive and zero sequence network
2. Parallel circuits with common positive but isolated zero-sequence network
3. Parallel circuits with positive and zero sequence sources isolated.

One example of class3 networks could be the mutual coupling between a 400 kV line and rail road overhead lines. This type of mutual coupling is not so common although it exists and is not treated any further in this manual.

For each type of network class we can have three different topologies; the parallel line can be in service, out of service, out of service and grounded in both ends.

The reach of the distance protection zone1 will be different depending on the operation condition of the parallel line. It is therefore recommended to use the different setting groups to handle the cases when the parallel line is in operation and out of service and grounded at both ends.

The distance protection within the IED can compensate for the influence of a zero-sequence mutual coupling on the measurement at single phase-to-ground faults in the following ways, by using:

- The possibility of different setting values that influence the ground-return compensation for different distance zones within the same group of setting parameters.
- Different groups of setting parameters for different operating conditions of a protected multi circuit line.

Most multi circuit lines have two parallel operating circuits. The application guide mentioned below recommends in more detail the setting practice for this particular type of line. The basic principles also apply to other multi circuit lines.

Parallel line applications

This type of networks are defined as those networks where the parallel transmission lines terminate at common nodes at both ends. We consider the three most common operation modes:

1. parallel line in service.
2. parallel line out of service and grounded.
3. parallel line out of service and not grounded.

Parallel line in service

This type of application is very common and applies to all normal sub-transmission and transmission networks.

A simplified single line diagram is shown in figure 153.

$$\bar{Z} = \frac{\bar{V}_{ph}}{\bar{I}_{ph} + 3\bar{I}_0 \cdot \frac{\bar{Z}_0 - \bar{Z}_1}{3 \cdot \bar{Z}_1}} = \frac{\bar{V}_{ph}}{\bar{I}_{ph} + 3\bar{I}_0 \cdot \bar{K}_N}$$

(Equation 215)

Where:

Vph	is phase-to-ground voltage at the IED point
Iph	is phase current in the faulty phase
3I0	is ground to fault current
Z1	is positive sequence impedance
Z0	is zero sequence impedance

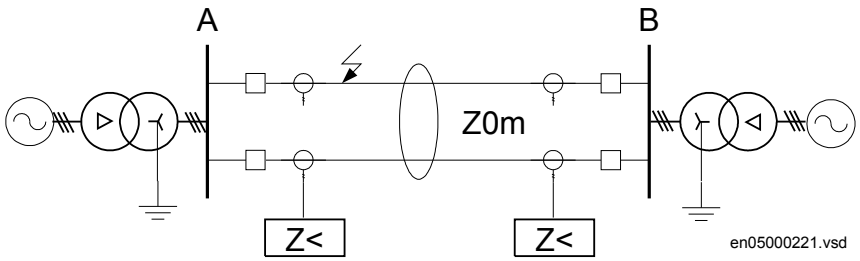

Figure 153: Class 1, parallel line in service.

The equivalent circuit of the lines can be simplified, see figure 154.

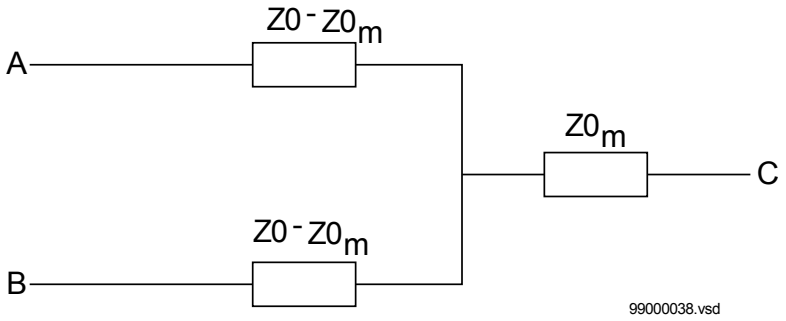

Figure 154: Equivalent zero sequence impedance circuit of the double-circuit, parallel, operating line with a single phase-to-ground fault at the remote busbar

When mutual coupling is introduced, the voltage at the IED point A will be changed.

If the current on the parallel line have negative sign compare to the current on the protected line that is, the current on the parallel line has an opposite direction compare to the current on the protected line, the distance function will overreach. If the currents have the same direction, the distance protection will underreach.

Calculation for a 400 kV line, where we for simplicity have excluded the resistance, gives with X1L=0.303 Ω/km, X0L=0.88 Ω/km, zone 1 reach is set to 90% of the line reactance p=71% that is, the protection is underreaching with approximately 20%.

The zero-sequence mutual coupling can reduce the reach of distance protection on the protected circuit when the parallel line is in normal operation. The reduction of the reach is most pronounced with no infeed in the line IED closest to the fault. This reach reduction is normally less than 15%. But when the reach is reduced at one line end, it is proportionally increased at the opposite line end. So this 15% reach reduction does not significantly affect the operation of a permissive under-reach scheme.

Parallel line out of service and grounded

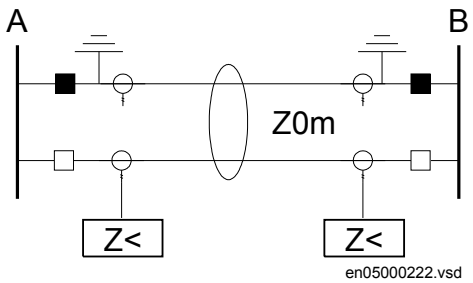

Figure 155: The parallel line is out of service and grounded.

When the parallel line is out of service and grounded at both ends on the bus bar side of the line CT so that zero sequence current can flow on the parallel line, the equivalent zero sequence circuit of the parallel lines will be according to figure 155.

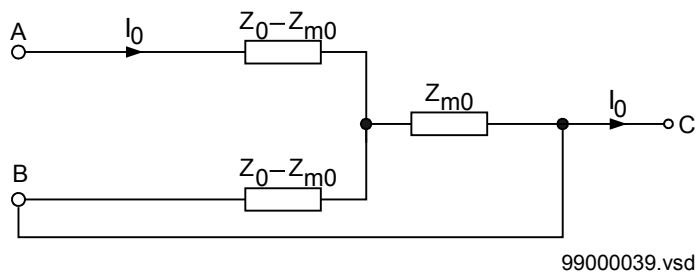

Figure 156: Equivalent zero-sequence impedance circuit for the double-circuit line that operates with one circuit disconnected and grounded at both ends.

Here the equivalent zero sequence impedance is equal to Z0-Z0m in parallel with (Z0-Z0m)/Z0-Z0m+Z0m which is equal to equation 216.

$$\overline{Z}_E = \frac{\overline{Z}_0^2 - \overline{Z}_{om}^2}{\overline{Z}_0}$$

(Equation 216)

The influence on the distance measurement will be a considerable overreach, which must be considered when calculating the settings. It is a recommendation to use a separate setting group for this operation condition since it will reduce the reach considerable when the line is in operation. All expressions below are proposed for practical use. They assume the value of zero sequence, mutual resistance R0m equals to zero. They consider only the zero-sequence, mutual reactance X0m. Calculate the equivalent X0E and R0E zero-sequence parameters according to equation 217 and equation 218 for each particular line section and use them for calculating the reach for the underreaching zone.

$$R_{0E} = R_0 \cdot \left(1 + \frac{X_{0m}^2}{R_0^2 + X_0^2} \right)$$

(Equation 217)

$$X_{0E} = X_0 \cdot \left(1 - \frac{X_{0m}^2}{R_0^2 + X_0^2} \right)$$

(Equation 218)

Parallel line out of service and not grounded

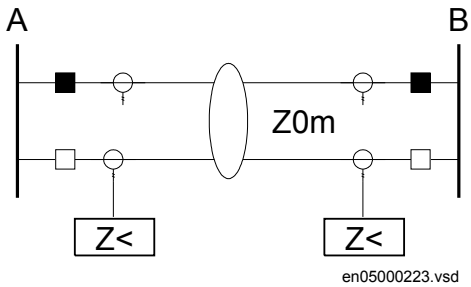

Figure 157: Parallel line is out of service and not grounded.

When the parallel line is out of service and not grounded, the zero sequence on that line can only flow through the line admittance to the ground. The line admittance is high which limits the zero sequence current on the parallel line to very low values. In practice, the equivalent zero sequence impedance circuit for faults at the remote bus bar can be simplified to the circuit shown in figure 157

The line zero-sequence mutual impedance does not influence the measurement of the distance protection in a faulty circuit. This means that the reach of the underreaching distance protection zone is reduced if, due to operating conditions, the equivalent zero sequence impedance is set according to the conditions when the parallel system is out of operation and grounded at both ends.

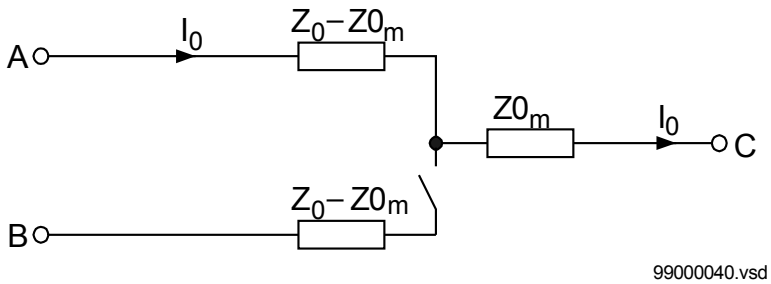

Figure 158: Equivalent zero-sequence impedance circuit for a double-circuit line with one circuit disconnected and not grounded.

The reduction of the reach is equal to equation 219.

$$\overline{K}_U = \frac{\frac{1}{3}\cdot\left(2\cdot\overline{Z}_1 + \overline{Z}_{0E}\right) + R_f}{\frac{1}{3}\cdot\left(2\cdot\overline{Z}_1 + \overline{Z}_0\right) + R_f} = 1 - \frac{\overline{Z}_{m0}^{\,2}}{\overline{Z}_0\cdot\left(2\cdot\overline{Z}_1 + \overline{Z}_0 + 3R_f\right)}$$

(Equation 219)

This means that the reach is reduced in reactive and resistive directions. If the real and imaginary components of the constant A are equal to equation 220 and equation 221.

$$\mathrm{Re}(\overline{A}) = R0 \cdot (2 \cdot R1 + R0 + 3 \cdot Rf) - X0 \cdot (X0 + 2 \cdot X1)$$

(Equation 220)

$$\mathrm{Im}(\overline{A}) = X_0 \cdot (2 \cdot R_1 + R_0 + 3 \cdot R_1) + R_0 \cdot (2 \cdot X_1 + X_0)$$

(Equation 221)

The real component of the KU factor is equal to equation 222.

$$\mathrm{Re}\left(\overline{K}_u\right) = 1 + \frac{\mathrm{Re}\left(\overline{A}\right) \cdot X_{m0}{}^2}{\left[\mathrm{Re}\left(\overline{A}\right)\right]^2 + \left[\mathrm{Im}\left(\overline{A}\right)\right]^2}$$

(Equation 222)

The imaginary component of the same factor is equal to equation 223.

$$\mathrm{Im}\left(\overline{K}_U\right) = \frac{\mathrm{Im}\left(\overline{A}\right) \cdot X_{m0}{}^2}{\left[\mathrm{Re}\left(\overline{A}\right)\right]^2 + \left[\mathrm{Im}\left(\overline{A}\right)\right]^2}$$

(Equation 223)

Ensure that the underreaching zones from both line ends will overlap a sufficient amount (at least 10%) in the middle of the protected circuit.

7.5.2.8 Tapped line application

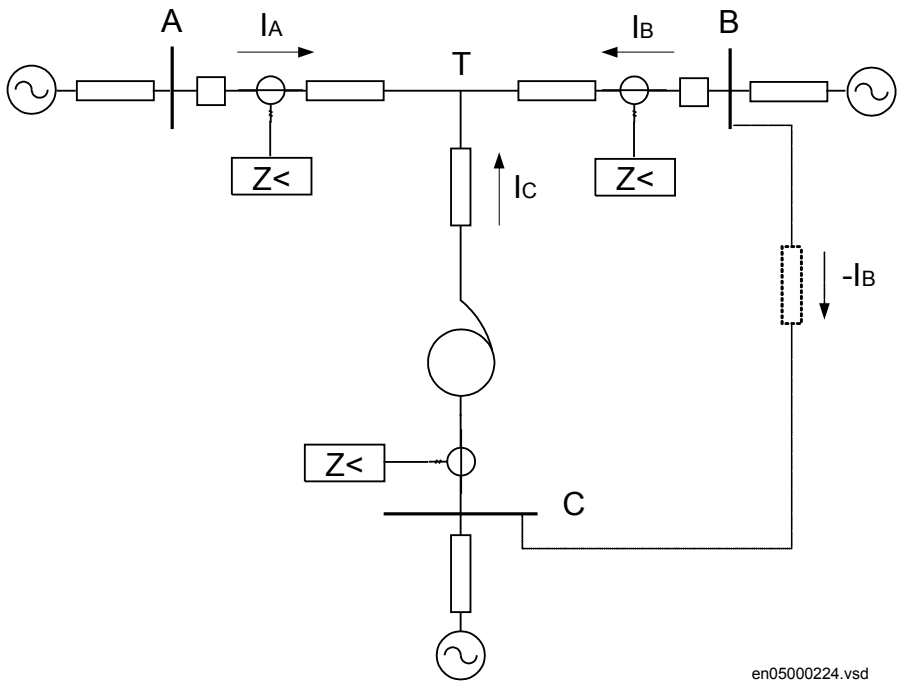

Figure 159: Example of tapped line with Auto transformer

This application gives rise to similar problem that was highlighted in section "Fault infeed from remote end" that is, increased measured impedance due to fault current infeed. For example for faults between the T point and B station the measured impedance at A and C will be

$$\bar{Z}_A = \bar{Z}_{AT} + \frac{\bar{I}_A + \bar{I}_C}{\bar{I}_A} \cdot \bar{Z}_{TF}$$

(Equation 224)

$$\bar{Z}_C = \bar{Z}_{Trf} + \left(\bar{Z}_{CT} + \frac{\bar{I}_A + \bar{I}_C}{\bar{I}_C} \cdot \bar{Z}_{TB} \right) \cdot \left(\frac{V2}{V1} \right)^2$$

(Equation 225)

Where:

ZAT and ZCT	is the line impedance from the B respective C station to the T point.
IA and IC	is fault current from A respective C station for fault between T and B.
V2/V1	Transformation ratio for transformation of impedance at V1 side of the transformer to the measuring side V2 (it is assumed that current and voltage distance function is taken from V2 side of the transformer).

For this example with a fault between T and B, the measured impedance from the T point to the fault will be increased by a factor defined as the sum of the currents from T point to the fault divided by the IED current. For the IED at C, the impedance on the high voltage side U1 has to be transferred to the measuring voltage level by the transformer ratio.

Another complication that might occur depending on the topology is that the current from one end can have a reverse direction for fault on the protected line. For example for faults at T the current from B might go in reverse direction from B to C depending on the system parameters (see the dotted line in figure 159), given that the distance protection in B to T will measure wrong direction.

In three-end application, depending on the source impedance behind the IEDs, the impedances of the protected object and the fault location, it might be necessary to accept zone2 trip in one end or sequential trip in one end.

Generally for this type of application it is difficult to select settings of zone1 that both gives overlapping of the zones with enough sensitivity without interference with other zone1 settings that is, without selectivity conflicts. Careful fault calculations are necessary to determine suitable settings and selection of proper scheme communication.

Fault resistance

The performance of distance protection for single phase-to-ground faults is very important, because normally more than 70% of the faults on transmission lines are single phase-to-ground faults. At these faults, the fault resistance is composed of three parts: arc resistance, resistance of a tower construction, and tower-footing resistance. The arc resistance can be calculated according to Warrington's formula:

$$Rarc = \frac{28707 \cdot L}{I^{1.4}}$$

(Equation 226)

where:

L	represents the length of the arc (in meters). This equation applies for the distance protection zone 1. Consider approximately three-times arc foot spacing for the zone 2 and wind speed of approximately 50 km/h
I	is the actual fault current in A.

In practice, the setting of fault resistance for both phase-to-ground (*RFPE*) and phase-to-phase (*RFPP*) should be as high as possible without interfering with the load impedance in order to obtain reliable fault detection.

7.5.3 Setting guidelines

7.5.3.1 General

The settings for the Full-scheme distance protection, quadrilateral for earth faults (ZMMPDIS, 21) function are done in primary values. The instrument transformer ratio that has been set for the analogue input card is used to automatically convert the measured secondary input signals to primary values used in ZMMPDIS (21) function.

The following basics should be considered, depending on application, when doing the setting calculations:

- Errors introduced by current and voltage instrument transformers, particularly under transient conditions.
- Inaccuracies in the line zero-sequence impedance data, and their effect on the calculated value of the ground-return compensation factor.
- The effect of infeed between the IED and the fault location, including the influence of different Z0/Z1 ratios of the various sources.
- The phase impedance of non transposed lines is not identical for all fault loops. The difference between the impedances for different phase-to-ground loops can be as large as 5-10% of the total line impedance.
- The effect of a load transfer between the IEDs of the protected fault resistance is considerable, the effect must be recognized.
- Zero-sequence mutual coupling from parallel lines.

7.5.3.2 Setting of zone1

The different errors mentioned earlier usually require a limitation of the underreaching zone (normally zone 1) to 75 - 90% of the protected line.

In case of parallel lines, consider the influence of the mutual coupling according tosection "Parallel line application with mutual coupling" and select the case(s) that are valid in your application. We recommend to compensate setting for the cases when the parallel line is in operation, out of service and not grounded and out of service and grounded in both ends. The setting of grounded fault reach should be selected to be <95% also when parallel line is out of service and grounded at both ends (worst case).

7.5.3.3 Setting of overreaching zone

The first overreaching zone (normally zone2) must detect faults on the whole protected line. Considering the different errors that might influence the measurement in the same way as for zone1, it is necessary to increase the reach of the overreaching zone to at least 120% of the protected line. The zone2 reach can be even higher if the fault infeed

from adjacent lines at remote end are considerable higher than the fault current at the IED location.

The setting shall generally not exceed 80% of the following impedances:

- The impedance corresponding to the protected line, plus the first zone reach of the shortest adjacent line.
- The impedance corresponding to the protected line, plus the impedance of the maximum number of transformers operating in parallel on the bus at the remote end of the protected line.

If the requirements in the dotted paragraphs above gives a zone2 reach less than 120%, the time delay of zone2 must be increased by approximately 200ms to avoid unwanted operation in cases when the telecommunication for the short adjacent line at remote end is down during faults. The zone2 must not be reduced below 120% of the protected line section. The whole line must be covered under all conditions.

The requirement that the zone 2 shall not reach more than 80% of the shortest adjacent line at remote end is highlighted wit a simple example below.

If a fault occurs at point F (see figure 11, also for the explanation of all abbreviations used), the IED at point A senses the impedance:

$$\overline{Z}_{AF} = \frac{\overline{V}_A}{\overline{I}_A} = \overline{Z}_{AC} + \frac{\overline{I}_A + \overline{I}_C}{\overline{I}_A} \cdot \overline{Z}_{CF} + \frac{\overline{I}_A + \overline{I}_C + \overline{I}_B}{\overline{I}_A} \cdot R_F = \overline{Z}_{AC} + \left(1 + \frac{\overline{I}_C}{\overline{I}_A}\right) \cdot \overline{Z}_{CF} + \left(1 + \frac{\overline{I}_C + \overline{I}_B}{\overline{I}_A}\right) \cdot R_F$$

(Equation 227)

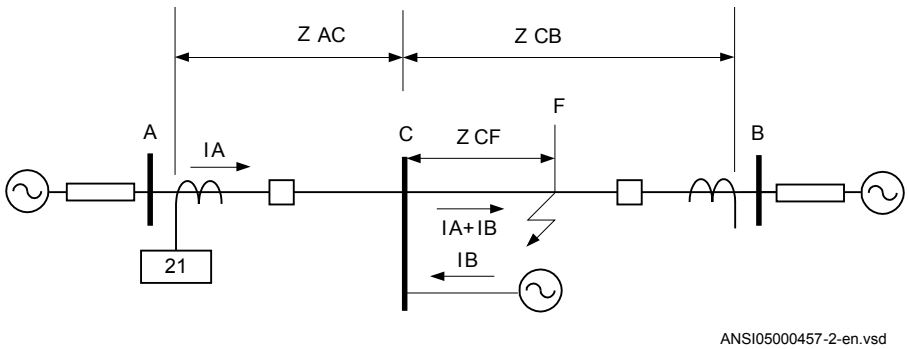

Figure 160:

7.5.3.4 Setting of reverse zone

The reverse zone is applicable for purposes of scheme communication logic, current reversal logic, weak-end-infeed logic, and so on. The same applies to the back-up protection of the bus bar or power transformers. It is necessary to secure, that it always

covers the overreaching zone, used at the remote line IED for the telecommunication purposes.

Consider the possible enlarging factor that might exist due to fault infeed from adjacent lines. Equation 228 can be used to calculate the reach in reverse direction when the zone is used for blocking scheme, weak-end infeed and so on.

$$Zrev \geq 1.2 \cdot \left(ZL - Z2rem \right)$$

(Equation 228)

Where:

ZL is the protected line impedance

Z2rem is zone2 setting at remote end of protected line

In some applications it might be necessary to consider the enlarging factor due to fault current infeed from adjacent lines in the reverse direction in order to obtain certain sensitivity.

7.5.3.5 Setting of zones for parallel line application

Parallel line in service – Setting of zone1

With reference to section "Parallel line applications", the zone reach can be set to 85% of protected line.

Parallel line in service – setting of zone2

Overreaching zones (in general, zones 2 and 3) must overreach the protected circuit in all cases. The greatest reduction of a reach occurs in cases when both parallel circuits are in service with a single phase-to-ground fault located at the end of a protected line. The equivalent zero-sequence impedance circuit for this case is equal to the one in figure 154 in section "Parallel line applications".

The components of the zero-sequence impedance for the overreaching zones must be equal to at least:

$$R_{0E} = R_0 + R_{m0}$$

(Equation 229)

$$X_{0E} = X_0 + X_{m0}$$

(Equation 230)

Check the reduction of a reach for the overreaching zones due to the effect of the zero sequence mutual coupling. The reach is reduced for a factor:

$$K0 = 1 - \frac{Z0_m}{2 \cdot Z1 + Z0 + R_f}$$

(Equation 231)

If the denominator in equation 231 is called B and Z0m is simplified to X0m, then the real and imaginary part of the reach reduction factor for the overreaching zones can be written as:

$$\mathrm{Re}\left(\overline{K}0\right) = 1 - \frac{X0m \cdot \mathrm{Re}\left(B\right)}{\mathrm{Re}\left(B\right)^2 + \mathrm{Im}\left(B\right)^2}$$

(Equation 232)

$$\mathrm{Im}\left(\overline{K}0\right) = \frac{X0m \cdot \mathrm{Im}\left(B\right)}{\mathrm{Re}\left(B\right)^2 + \mathrm{Im}\left(B\right)^2}$$

(Equation 233)

Parallel line is out of service and grounded in both ends

Apply the same measures as in the case with a single set of setting parameters. This means that an underreaching zone must not overreach the end of a protected circuit for the single phase-to-ground faults. Set the values of the corresponding zone (zero-sequence resistance and reactance) equal to:

$$R_{0E} = R_0 \cdot \left(1 + \frac{X_{m0}^2}{R_0^2 + X_0^2}\right)$$

(Equation 234)

$$X_{0E} = X_0 \cdot \left(1 - \frac{X_{m0}^2}{R_0^2 + X_0^2}\right)$$

(Equation 235)

7.5.3.6 Setting of reach in resistive direction

Set the resistive reach independently for each zone, for phase-to-ground loop (*RIPE*) measurement.

Set separately the expected fault resistance for the phase-to-ground faults (*RFPE*) for each zone. Set all remaining reach setting parameters independently of each other for each distance zone.

The final reach in resistive direction for phase-to-ground fault loop measurement automatically follows the values of the line-positive and zero-sequence resistance, and at the end of the protected zone is equal to equation 236.

$$R = \frac{1}{3}(2 \cdot R1PE + R0PE) + RFPE$$

(Equation 236)

$$\varphi_{loop} = \arctan\left[\frac{2 \cdot X1PE + X0}{2 \cdot R1PE + R0}\right]$$

(Equation 237)

Setting of the resistive reach for the underreaching zone1 should follow the condition:

$$RFPE \leq 4.5 \cdot X1$$

(Equation 238)

7.5.3.7 Load impedance limitation, without load encroachment function

The following instructions is valid when the load encroachment function is not activated (*OperationLdCmp* is set to Off). If the load encroachment function is to be used for all or some of the measuring zones, the load limitation for those zones according to this chapter can be omitted. Check the maximum permissible resistive reach for any zone to ensure that there is a sufficient setting margin between the IED boundary and the minimum load impedance. The minimum load impedance (Ω/phase) is calculated as:

$$Z_{load\,\min} = \frac{V^2}{S}$$

(Equation 239)

Where:

V is the minimum phase-to-phase voltage in kV

S is the maximum apparent power in MVA.

The load impedance [Ω/phase] is a function of the minimum operation voltage and the maximum load current:

$$Z_{load} = \frac{V_{\min}}{\sqrt{3 \cdot I_{\max}}}$$

(Equation 240)

Minimum voltage V_{min} and maximum current Imax are related to the same operating conditions. Minimum load impedance occurs normally under emergency conditions.

Because a safety margin is required to avoid load encroachment under three-phase conditions and to guarantee correct healthy phase IED operation under combined heavy three-phase load and ground faults, consider both: phase-to-phase and phase-to-ground fault operating characteristics.

To avoid load encroachment for the phase-to-ground measuring elements, the set resistive reach of any distance protection zone must be less than 80% of the minimum load impedance.

$$RFPE \le 0.8 \cdot Z_{load}$$

(Equation 241)

This equation is applicable only when the loop characteristic angle for the single phase-to-ground faults is more than three times as large as the maximum expected load-impedance angle. More accurate calculations are necessary according to the equation below:

$$RFPE \le 0.8 \cdot Z_{load\,\min} \cdot \left[\cos\vartheta - \frac{2 \cdot R1 + R0}{2 \cdot X1 + X0} \cdot \sin\vartheta \right]$$

(Equation 242)

Where:

ϑ is a maximum load-impedance angle, related to the minimum load impedance conditions.

All this is applicable for all measuring zones when no power swing detection element is in the protection scheme. Use an additional safety margin of approximately 20% in cases when a power swing detection element is in the protection scheme, refer to the description of the power swing detection (ZMRPSB, 78) function.

7.5.3.8 Load impedance limitation, with load encroachment function activated

The parameters for load encroachment shaping of the characteristic are found in the description of the phase selection with load encroachment function, section "Resistive reach with load encroachment characteristic". If the characteristic for the impedance measurement shall be shaped with the load encroachment algorithm, the parameter *OperationLdCmp* in the phase selection has to be switched *On*.

7.5.3.9 Setting of minimum operating currents

The operation of the distance function will be blocked if the magnitude of the currents is below the set value of the parameter *IMinOpPE*.

The default setting of *IMinOpPE* is 20% of *IBase* where *IBase* is the chosen base current for the analogue input channels. The value have been proven in practice to be suitable in most of the applications. However, there might be applications where it is necessary to increase the sensitivity by reducing the minimum operating current down to 10% of the IED base current. This happens especially in cases, when the IED serves as a remote back-up protection on series of very long transmission lines.

If the load current compensation is activated, there is an additional criteria *IMinOpIN* that will block the phase-ground loop if the 3I0<*IMinOpIN*. The default setting of *IMinOpIN* is 5% of the IED base current *IBase*.

The minimum operating fault current is automatically reduced to 75% of its set value, if the distance protection zone has been set for the operation in reverse direction.

7.5.3.10 Setting of timers for distance protection zones

The required time delays for different distance-protection zones are independent of each other. Distance protection zone1 can also have a time delay, if so required for selectivity reasons. One can set the time delays for all zones (basic and optional) in a range of 0 to 60 seconds. The tripping function of each particular zone can be inhibited by setting the corresponding *Operation* parameter to *Off*. Different time delays are possible for the ph-E (*tPE*) measuring loops in each distance protection zone separately, to further increase the total flexibility of a distance protection.

7.6 Additional distance protection directional function for earth faults ZDARDIR

7.6.1 Identification

Function description	IEC 61850 identification	IEC 60617 identification	ANSI/IEEE C37.2 device number
Additional distance protection directional function for earth faults	ZDARDIR	Z <	-

7.6.2 Application

The phase-to-ground impedance elements can be supervised by a phase unselective directional function based on symmetrical components (option).

7.6.3 Setting guidelines

AngleRCA and *AngleOp*: these settings define the operation characteristic. Setting *AngleRCA* is used to turn the directional characteristic, if the expected fault current angle does not coincide with the polarizing quantity to produce the maximum torque. The angle is positive, if operating quantity lags the polarizing quantity and negative if it leads the polarizing quantity. The setting *AngleOp* (max. 180 degrees) defines the wideness of the operating sector. The sector is mirror-symmetric along the MTA (Maximum Torque Axis).

Directional elements for ground-faults must operate at fault current values below the magnitude of load currents. As phase quantities are adversely affected by load, the use of sequence quantities are preferred as polarizing quantities for the ground directional elements. Optionally six modes are available:

- Zero-sequence voltage polarized ($-V_0$)
- Negative-sequence voltage polarized (-V2)
- Zero-sequence current (I_0)
- Dual polarization ($-V_0/I_0$)
- Zero-sequence voltage with zero-sequence current compensation (-V0Comp)
- Negative-sequence voltage with negative-sequence current compensation (-V2Comp)

The zero-sequence voltage polarized ground directional unit compares the phase angles of zero sequence current I_0 with zero sequence voltage $-V_0$ at the location of the protection.

The negative-sequence voltage polarized ground directional unit compares correspondingly I_2 with -V2.

In general the zero sequence voltage is higher than the negative sequence voltage at the fault, but decreases more rapidly the further away from the fault it is measured. This makes the $-V_0$ polarization preferable in short line applications, where no mutual coupling problems exist.

Negative sequence polarization has the following advantages compared to zero sequence polarization:

- on solidly grounded systems V2 may be larger than V_0. If the bus behind the IED location is a strong zero-sequence source, the negative sequence voltage available at the IED location is higher than the zero-sequence voltage.
- negative sequence polarization is not affected by zero sequence mutual coupling (zero sequence polarized directional elements may misoperate in parallel lines with high zero-sequence mutual coupling and isolated zero sequence sources).
- negative sequence polarization is less affected by the effects of VT neutral shift (possible caused by ungrounded or multiple grounds on the supplying VT neutral)
- no open-delta winding is needed in VTs as only 2 VTs are required ($V_2 = (V_{L12} - a \cdot V_{L23})/3$)

The zero sequence current polarized ground directional unit compares zero sequence current I0 of the line with some reference zero-sequence current, for example the current in the neutral of a power transformer. The relay characteristic *AngleRCA* is fixed and equals 0 degrees. Care must be taken to ensure that neutral current direction remains unchanged during all network configurations and faults, and therefore all transformer configurations/constructions are not suitable for polarization.

In dual polarization, zero sequence voltage polarization and zero sequence current polarization elements function in a “one-out-of-two mode”. Typically when the zero sequence current is high, then the zero sequence voltage is low and vice versa. Thus combining a zero sequence voltage polarized and a zero sequence current polarized (neutral current polarized) directional element into one element, the IED can benefit from both elements as the two polarization measurements function in a “one-out-of-two mode” complementing each other. In this mode, if IPOL is greater than IPOL> setting, then only IPOL based direction is detected and UPOL based direction will be blocked. Flexibility is also increased as zero sequence voltage polarization can be used, if the zero sequence current polarizing source is switched out of service. When the zero sequence polarizing current exceeds the set value for IPOL>, zero sequence current polarizing is used. For values of zero sequence polarizing current less than the set value for startPolCurrLevel, zero sequence voltage polarizing is used.

Zero-sequence voltage polarization with zero-sequence current compensation (-V0Comp) compares the phase angles of zero sequence current I_0 with zero-sequence voltage added by a phase-shifted portion of zero-sequence current (see equation 243) at the location of the protection. The factor k = setting K_{mag}. This type of polarization is

intended for use in applications where the zero sequence voltage can be too small to be used as the polarizing quantity, and there is no zero sequence polarizing current (transformer neutral current) available. The zero sequence voltage is “boosted” by a portion of the measured line zero sequence current to form the polarizing quantity. This method requires that a significant difference must exist in the magnitudes of the zero sequence currents for close-up forward and reverse faults, that is, it is a requirement that |V0| >> |k · I0| for reverse faults, otherwise there is a risk that reverse faults can be seen as forward.

$$-V_0 + k \cdot I_0 \cdot e^{AngleRCA}$$

(Equation 243)

The negative-sequence voltage polarization with negative-sequence current compensation (-U2Comp) compares correspondingly I_2 with (see equation 244), and similarly it must be ensured that $|V_2| >> |k \cdot I_2|$ for reverse faults.

$$-V_2 + k \cdot I_2 \cdot e^{AngleRCA}$$

(Equation 244)

7.7 Mho impedance supervision logic ZSMGAPC

7.7.1 Identification

Function description	IEC 61850 identification	IEC 60617 identification	ANSI/IEEE C37.2 device number
Mho Impedance supervision logic	ZSMGAPC	-	-

7.7.2 Application

The Mho impedance supervision logic (ZSMGAPC) includes features for fault inception detection and high SIR detection. It also includes the functionality for loss of potential logic as well as for the pilot channel blocking scheme.

One part of ZSMGAPC function identifies a loss of phase potential that is the result of a long term (steady state) condition such as a blown fuse or an open voltage transformer winding or connection. This will block all trips by the distance protection since they are based on voltage measurement.

In the pilot channel blocking scheme a fault inception detected by a fast acting change detector is used to send a block signal to the remote end in order to block an overreaching zone. If the fault is later detected as a forward fault the earlier sent blocking signal is stopped.

The blocking scheme is very dependable because it will operate for faults anywhere on the protected line if the communication channel is out of service. Conversely, it is less secure than permissive schemes because it will trip for external faults within the reach of the tripping function if the communication channel is out of service. Inadequate speed or dependability can cause spurious tripping for external faults. Inadequate security can cause delayed tripping for internal faults.

ZSMGAPC function also includes functionality for blocking the sample based distance protection due to high SIR. SIR directly influences the fault voltage level for a given voltage level, and this is the major factor that affects the severity of CVT transients. Therefore, in cases where the SIR value is too high, further filtering of the measured signals will be needed.

7.7.3 Setting guidelines

GlobalBaseSel: Selects the global base value group used by the function to define (*IBase*), (*VBase*) and (*SBase*).

PilotMode: Set *PilotMode* to *On* when pilot scheme is to be used. In this mode fault inception function will send a block signal to remote end to block the overreaching zones, when operated.

DeltaI: The setting of *DeltaI* for fault inception detection is by default set to 10% of *IBase*, which is suitable in most cases.

Delta3I0: The setting of the parameter *Delta3I0* for fault inception detection is by default set to 10% of *VBase*, which is suitable in most cases.

DeltaV: The setting of *DeltaV* for fault inception detection is by default set to 5% of *IBase*, which is suitable in most cases.

Delta3V0: The setting of *Delta3V0* for fault inception detection is by default set to 5% of *VBase*, which is suitable in most cases.

Zreach: The setting of *Zreach* must be adopted to the specific application. The setting is used in the SIR calculation for detection of high SIR.

SIRLevel: The setting of the parameter *SIRLevel* is by default set to 10. This is a suitable setting for applications with CVT to avoid transient overreach due to the CVT dynamics. If magnetic voltage transformers are used, set *SIRLevel* to 15 the highest level.

IMinOp: The minimum operate current for the SIR measurement is by default set to 20% of *IBase*.

7.8 Faulty phase identification with load encroachment FMPSPDIS (21)

7.8.1 Identification

Function description	IEC 61850 identification	IEC 60617 identification	ANSI/IEEE C37.2 device number
Faulty phase identification with load encroachment for mho	FMPSPDIS	Z <	21

7.8.2 Application

The operation of transmission networks today is in many cases close to the stability limit. Due to environmental considerations the rate of expansion and reinforcement of the power system is reduced for example, difficulties to get permission to build new power lines.

The ability to accurately and reliably classifying different types of fault so that single pole tripping and autoreclosing can be used which plays an important roll in this matter.

Faulty phase identification with load encroachment for mho (FMPSPDIS) function is designed to accurately select the proper fault loop in the Distance protection function dependent on the fault type.

The heavy load transfer that is common in many transmission networks may in some cases be in opposite to the wanted fault resistance coverage. Therefore, FMPSPDIS has an built-in algorithm for load encroachment, which gives the possibility to enlarge the resistive setting of both the Phase selection with load encroachment and the measuring zones without interfering with the load.

The load encroachment algorithm and the blinder functions are always activated in the phase selector. The influence from these functions on the zone measurement characteristic has to be activated by switching the setting parameter *LoadEnchMode* for the respective measuring zone(s) to *Enabled*.

7.8.3 Setting guidelines

GlobalBaseSel: Selects the global base value group used by the function to define (*IBase*), (*VBase*) and (*SBase*).

INRelPG: The setting of *INRelPG* for release of the phase-to-ground loop is by default set to 20% of *IBase*. The default setting is suitable in most applications.

The setting must normally be set to at least 10% lower than the setting of *3I0BLK_PP*to give priority to open phase-to-ground loop. *INRelPG* must be above the normal un-balance current ($3I_0$) that might exist due to un-transposed lines.

The setting must also be set higher than the $3I_0$ that occurs when one pole opens in single pole trip applications.

3I0BLK_PP: The setting of *3I0BLK_PP* is by default set to 40% of *IBase*, which is suitable in most applications.

I1LowLevel: The setting of the positive current threshold *I1LowLevel* used in the sequence based part of the phase selector for identifying three-phase fault, is by default set to 10% of *IBase*.

The default setting is suitable in most cases, but must be checked against the minimum three-phase current that occurs at remote end of the line with reasonable fault resistance.

IMaxLoad: The setting *IMaxLoad* must be set higher than the maximum load current transfer during emergency conditions including a safety margin of at least 20%. The setting is proposed to be according to equation 245:

$$IMaxLoad = 1.2\ ILoad \quad \text{(Equation 245)}$$

where:

1.2 is the security margin against the load current and

ILoad is the maximal load current during emergency conditions.

The current ILoad can be defined according to equation 246.

$$ILoad = \frac{S\max}{\sqrt{3} \cdot VLmn}$$

(Equation 246)

where:

Smax is the maximal apparent power transfer during emergency conditions and

VLmn is the phase-to-phase voltage during the emergency conditions at the IED location.

7.8.3.1 Load encroachment

The load encroachment function has two setting parameters, *RLd* for the load resistance and *LdAngle* for the inclination of the load sector (see figure 161).

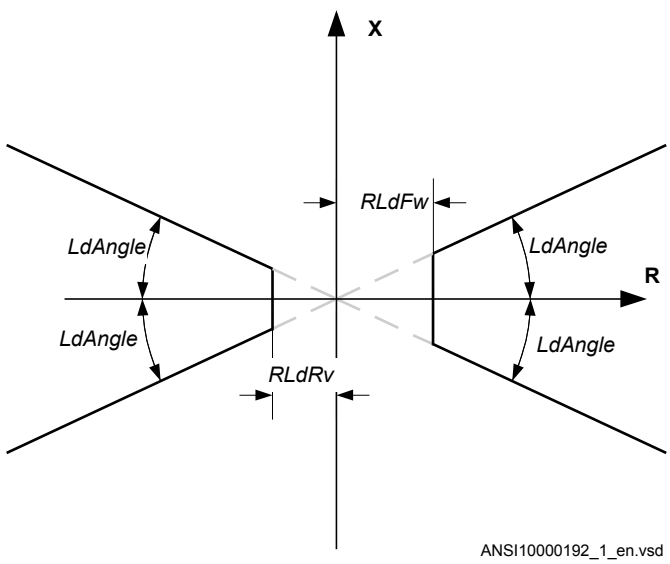

Figure 161: Load encroachment characteristic

The calculation of the apparent load impedance Z_{load} and minimum load impedance $Z_{loadmin}$ can be done according to equations:

$$Zload = \frac{V_{\min}}{\sqrt{3} \cdot I_{\max}}$$

(Equation 247)

$$Zload\min = \frac{V^2}{S}$$

(Equation 248)

Where:

V is the minimum phase-to-phase voltage in kV

S is the maximum apparent power in MVA.

The load angle *LdAngle* can be derived according to equation 249:

$$LdAngle = a\cos\left(\frac{P\max}{S\max}\right)$$

(Equation 249)

where:

Pmax is the maximal active power transfer during emergency conditions and

Smax is the maximal apparent power transfer during emergency conditions.

The *RLd* can be calculated according to equation 250:

$$RLd = ZLoad \cdot \cos(LdAngle)$$

(Equation 250)

The setting of *RLd* and *LdAngle* is by default set to 80 ohm/phase and 20 degrees. Those values must be adapted to the specific application.

7.9 Distance protection zone, quadrilateral characteristic, separate settings ZMRPDIS (21), ZMRAPDIS (21) and ZDRDIR (21D)

7.9.1 Identification

Function description	IEC 61850 identification	IEC 60617 identification	ANSI/IEEE C37.2 device number
Distance protection zone, quadrilateral characteristic, separate settings (zone 1)	ZMRPDIS	Z<	21
Distance protection zone, quadrilateral characteristic, separate settings (zone 2-5)	ZMRAPDIS	Z<	21

Function description	IEC 61850 identification	IEC 60617 identification	ANSI/IEEE C37.2 device number
Directional impedance quadrilateral	ZDRDIR	Z<->	21D

7.9.2 Application

Sub-transmission networks are being extended and often become more and more complex, consisting of a high number of multi-circuit and/or multi terminal lines of very different lengths. These changes in the network will normally impose more stringent demands on the fault clearing equipment in order to maintain an unchanged or increased security level of the power system.

The distance protection function in the IED is designed to meet basic requirements for application on transmission and sub-transmission lines although it also can be used on distribution levels.

7.9.2.1 System grounding

The type of system grounding plays an important role when designing the protection system. Some hints with respect to distance protection are highlighted below.

Solid grounded networks

In solidly grounded systems, the transformer neutrals are connected solidly to ground without any impedance between the transformer neutral and ground.

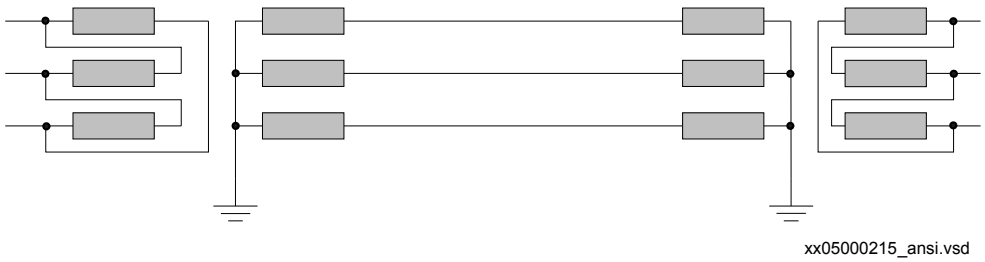

Figure 162: Solidly grounded network.

The ground-fault current is as high or even higher than the short-circuit current. The series impedances determine the magnitude of the fault current. The shunt admittance has very limited influence on the ground-fault current. The shunt admittance may, however, have some marginal influence on the ground-fault current in networks with long transmission lines.

The ground-fault current at single phase-to- ground in phase A can be calculated as equation 122:

$$3I_0 = \frac{3 \cdot V_A}{Z_1 + Z_2 + Z_0 + 3Z_f} = \frac{V_A}{Z_1 + Z_N + Z_f}$$

(Equation 251)

Where:

VA	is the phase-to- ground voltage (kV) in the faulty phase before fault
Z_1	is the positive sequence impedance (Ω/phase)
Z_2	is the negative sequence impedance (Ω/phase)
Z_0	is the zero sequence impedance (Ω/phase)
Z_f	is the fault impedance (Ω), often resistive
Z_N	is the ground return impedance defined as $(Z_0-Z_1)/3$

The voltage on the healthy phases is generally lower than 140% of the nominal phase-to-ground voltage. This corresponds to about 80% of the nominal phase-to-phase voltage.

The high zero sequence current in solid grounded networks makes it possible to use impedance measuring technique to detect ground-fault. However, distance protection has limited possibilities to detect high resistance faults and should therefore always be complemented with other protection function(s) that can carry out the fault clearance in those cases.

Effectively grounded networks

A network is defined as effectively grounded if the ground-fault factor f_e is less than 1.4. The ground-fault factor is defined according to equation 43.

$$f_e = \left| \frac{V_{max}}{V_{pn}} \right|$$

(Equation 252)

Where:

V_{max}	is the highest fundamental frequency voltage on one of the healthy phases at single phase-to-ground fault.
V_{pn}	is the phase-to-ground fundamental frequency voltage before fault.

Another definition for effectively grounded network is when the following relationships between the symmetrical components of the network source impedances are valid, see equation 124 and equation 125.

$$X_0 < 3 \cdot X_1$$

(Equation 253)

$$R_0 \leq R_1$$

(Equation 254)

Where

R_0	is the resistive zero sequence source impedance
X_0	is the reactive zero sequence source impedance
R_1	is the resistive positive sequence source impedance
X_1	is the reactive positive sequence source impedance

The magnitude of the ground-fault current in effectively grounded networks is high enough for impedance measuring element to detect ground-fault. However, in the same way as for solid grounded networks, distance protection has limited possibilities to detect high resistance faults and should therefore always be complemented with other protection function(s) that can carry out the fault clearance in this case.

High impedance grounded networks

In high impedance networks, the neutral of the system transformers are connected to the ground through high impedance, mostly a reactance in parallel with a high resistor.

This type of network is many times operated in radial, but can also be found operating meshed networks.

What is typical for this type of network is that the magnitude of the ground fault current is very low compared to the short circuit current. The voltage on the healthy phases will get a magnitude of √3 times the phase voltage during the fault. The zero sequence voltage ($3V_0$) will have the same magnitude in different places in the network due to low voltage drop distribution.

The magnitude of the total fault current can be calculated according to equation 126.

$$3I_0 = \sqrt{I_R^2 + \left(I_L - I_C\right)^2}$$

(Equation 255)

Where:

$3I_0$	is the ground-fault current (A)
I_R	is the current through the neutral point resistor (A)
I_L	is the current through the neutral point reactor (A)
I_C	is the total capacitive ground-fault current (A)

The neutral point reactor is normally designed so that it can be tuned to a position where the reactive current balances the capacitive current from the network that is:

$$\omega L = \frac{1}{3 \cdot \omega \cdot C}$$

(Equation 256)

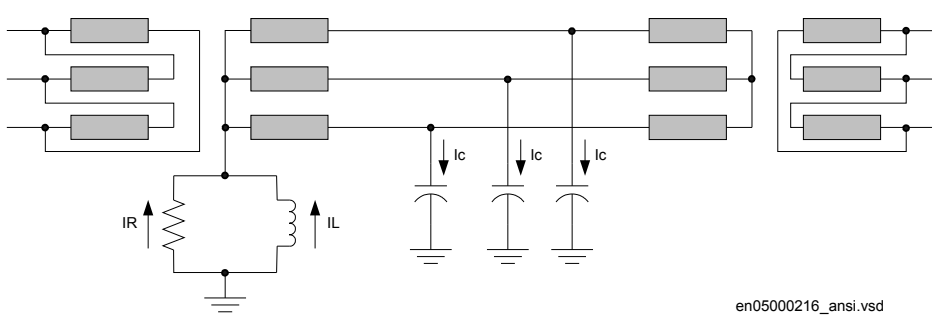

Figure 163: High impedance grounded network.

The operation of high impedance grounded networks is different compared to solid grounded networks where all major faults have to be cleared very fast. In high

impedance grounded networks, some system operators do not clear single phase-to-ground faults immediately; they clear the line later when it is more convenient. In case of cross-country faults, many network operators want to selectively clear one of the two ground-faults. To handle this type phenomena, a separate function called Phase preference logic (PPLPHIZ) is needed, which is not common to be used in transmission applications.

In this type of network, it is mostly not possible to use distance protection for detection and clearance of ground-faults. The low magnitude of the ground-fault current might not give pickup of the zero sequence measurement element or the sensitivity will be too low for acceptance. For this reason a separate high sensitive ground-fault protection is necessary to carry out the fault clearance for single phase-to-ground fault.

7.9.2.2 Fault infeed from remote end

All transmission and most all sub-transmission networks are operated meshed. Typical for this type of network is that fault infeed from remote end will happen when fault occurs on the protected line. The fault current infeed will enlarge the fault impedance seen by the distance protection. This effect is very important to keep in mind when both planning the protection system and making the settings.

With reference to figure 124, the equation for the bus voltage V_A at A side is:

$$\overline{V}_A = \overline{I}_A \cdot p \cdot Z_L + (\overline{I}_A + \overline{I}_B) \cdot R_f$$

(Equation 257)

If we divide V_A by I_A we get Z present to the IED at A side.

$$\overline{Z}_A = \frac{\overline{V}_a}{\overline{I}_A} = p \cdot \overline{Z}_L + \frac{\overline{I}_A + \overline{I}_B}{\overline{I}_A} \cdot R_f$$

(Equation 258)

The infeed factor $(I_A+I_B)/I_A$ can be very high, 10-20 depending on the differences in source impedances at local and remote end.

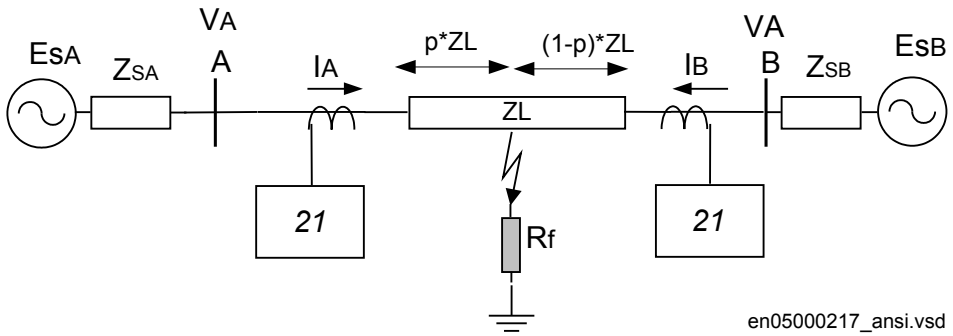

Figure 164: Influence of fault current infeed from remote line end

The effect of fault current infeed from remote line end is one of the most driving factors for justify complementary protection to distance protection.

When the line is heavily loaded, the distance protection at the exporting end will have a tendency to overreach. To handle this phenomenon, the IED has an adaptive built in algorithm which compensates the overreach tendency of zone 1, at the exporting end. No settings are required for this function.

7.9.2.3 Load encroachment

In some cases the load impedance might enter the zone characteristic without any fault on the protected line. The phenomenon is called load encroachment and it might occur when an external fault is cleared and high emergency load is transferred on the protected line. The effect of load encroachment is illustrated to the left in figure 165. The entrance of the load impedance inside the characteristic is of course not allowed and the way to handle this with conventional distance protection is to consider this with the settings, that is, to have a security margin between the distance zone and the minimum load impedance. This has the drawback that it will reduce the sensitivity of the protection, that is, the ability to detect resistive faults.

The IED has a built in function which shapes the characteristic according to the right figure of figure 165. The load encroachment algorithm will increase the possibility to detect high fault resistances, especially for phase-to-ground faults at remote line end. For example, for a given setting of the load angle *LdAngle* for Phase selection with load encroachment, quadrilateral characteristic function (FRPSPDIS, 21), the resistive blinder for the zone measurement can be expanded according to the figure 165 given higher fault resistance coverage without risk for unwanted operation due to load encroachment. This is valid in both directions.

The use of the load encroachment feature is essential for long heavy loaded lines, where there might be a conflict between the necessary emergency load transfer and necessary sensitivity of the distance protection. The function can also preferably be

used on heavy loaded medium long lines. For short lines, the major concern is to get sufficient fault resistance coverage and load encroachment is not a major problem. So, for short lines, the load encroachment function could preferably be switched off. See section "Load impedance limitation, without load encroachment function".

The settings of the parameters for load encroachment are done in (21), FRPSPDIS (21) function.

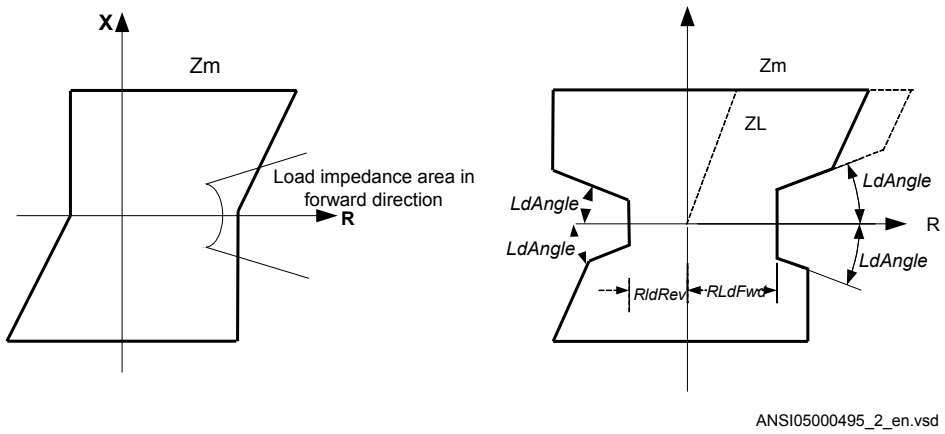

Figure 165: Load encroachment phenomena and shaped load encroachment characteristic defined in Phase selection and load encroachment function (FRPSPDIS, 21)

7.9.2.4 Short line application

Transmission line lengths for protection application purposes are classified as short, medium and long . The definition of short, medium and long lines is found in IEEE Std C37.113-1999.). The length classification is defined by the ratio of the source impedance at the protected line's terminal to the protected line's impedance (SIR). SIR's of about 4 or greater generally define a short line. Medium lines are those with SIR's greater than 0.5 and less than 4

In short line applications, the major concern is to get sufficient fault resistance coverage. Load encroachment is not so common. The line length that can be recognized as a short line is not a fixed length; it depends on system parameters such as voltage and source impedance, see table 17.

Table 24: Typical length of short and very short line

Line category	Vn	Vn
	110 kV	500 kV
Very short line	0.75 -3.5mile	3-15 miles
Short line	4-7 miles	15-30 miles

The IED's ability to set resistive and reactive reach independent for positive and zero sequence fault loops and individual fault resistance settings for phase-to-phase and phase-to-ground fault together with load encroachment algorithm improves the possibility to detect high resistive faults without conflict with the load impedance, see figure 125.

For very short line applications, the underreaching zone 1 can not be used due to the voltage drop distribution throughout the line will be too low causing risk for overreaching.It is difficult, if not impossible, to apply distance protection for short lines. It is possible to apply a overreaching pilot communication based POTT or Blocking scheme protection for such lines to have fast tripping along the entire line. Usually a unit protection, based on comparison of currents at the ends of the lines is applied for such lines.

Load encroachment is normally no problems for short line applications.

7.9.2.5 Long transmission line application

For long transmission lines, the margin to the load impedance, that is, to avoid load encroachment, will normally be a major concern. It is well known that it is difficult to achieve high sensitivity for phase-to-ground fault at remote line end of a long line when the line is heavy loaded.

What can be recognized as long lines with respect to the performance of distance protection can generally be described as in table 18, long lines have Source impedance ratio (SIR’s) less than 0.5.

Table 25: Typical length of long and very long lines

Line category	Vn 110 kV	Vn 500 kV
Long lines	45-60 miles	200-250 miles
Very long lines	>60 miles	>250 miles

The IED's ability to set resistive and reactive reach independent for positive and zero sequence fault loops and individual fault resistance settings for phase-to-phase and phase-to-ground fault together with load encroachment algorithm improves the possibility to detect high resistive faults at the same time as the security is improved (risk for unwanted trip due to load encroachment is eliminated), see figure 125.

7.9.2.6 Parallel line application with mutual coupling

General

Introduction of parallel lines in the network is increasing due to difficulties to get necessary area for new lines.

Parallel lines introduce an error in the measurement due to the mutual coupling between the parallel lines. The lines need not be of the same voltage in order to experience mutual coupling, and some coupling exists even for lines that are separated by 100 meters or more. The mutual coupling does influence the zero sequence impedance to the fault point but it does not normally cause voltage inversion.

It can be shown from analytical calculations of line impedances that the mutual impedances for positive and negative sequence are very small (< 1-2%) of the self impedance and it is a practice to neglect them.

From an application point of view there exists three types of network configurations (classes) that must be considered when making the settings for the protection function.

The different network configuration classes are:

1. Parallel line with common positive and zero sequence network
2. Parallel circuits with common positive but isolated zero sequence network
3. Parallel circuits with positive and zero sequence sources isolated.

One example of class 3 networks could be the mutual coupling between a 400kV line and rail road overhead lines. This type of mutual coupling is not so common although it exists and is not treated any further in this manual.

For each type of network class, there are three different topologies; the parallel line can be in service, out of service, out of service and grounded in both ends.

The reach of the distance protection zone 1 will be different depending on the operation condition of the parallel line. This can be handled by the use of different setting groups for handling the cases when the parallel line is in operation and out of service and grounded at both ends.

The distance protection within the IED can compensate for the influence of a zero sequence mutual coupling on the measurement at single phase-to-ground faults in the following ways, by using:

- The possibility of different setting values that influence the ground-return compensation for different distance zones within the same group of setting parameters.
- Different groups of setting parameters for different operating conditions of a protected multi circuit line.

Most multi circuit lines have two parallel operating circuits.

Parallel line applications

This type of networks are defined as those networks where the parallel transmission lines terminate at common nodes at both ends.

The three most common operation modes are:

1. parallel line in service.
2. parallel line out of service and grounded.
3. parallel line out of service and not grounded.

Parallel line in service

This type of application is very common and applies to all normal sub-transmission and transmission networks.

Let us analyze what happens when a fault occurs on the parallel line see figure 127.

From symmetrical components, we can derive the impedance Z at the relay point for normal lines without mutual coupling according to equation 130.

$$\bar{Z} = \frac{\bar{U}_{ph}}{\bar{I}_{ph} + 3\bar{I}_0 \cdot \frac{\bar{Z}_0 - \bar{Z}_1}{3 \cdot \bar{Z}_1}} = \frac{\bar{U}_{ph}}{\bar{I}_{ph} + 3\bar{I}_0 \cdot \bar{K}_N}$$

(Equation 259)

$$\bar{Z} = \frac{\bar{V}_{ph}}{\bar{I}_{ph} + 3\bar{I}_0 \cdot \frac{\bar{Z}_0 - \bar{Z}_1}{3 \cdot \bar{Z}_1}} = \frac{\bar{V}_{ph}}{\bar{I}_{ph} + 3\bar{I}_0 \cdot \bar{K}_N}$$

(Equation 259)

Where:

V_{ph}	is phase to ground voltage at the relay point
I_{ph}	is phase current in the faulty phase
$3I_0$	is ground fault current
Z_1	is positive sequence impedance
Z_0	is zero sequence impedance

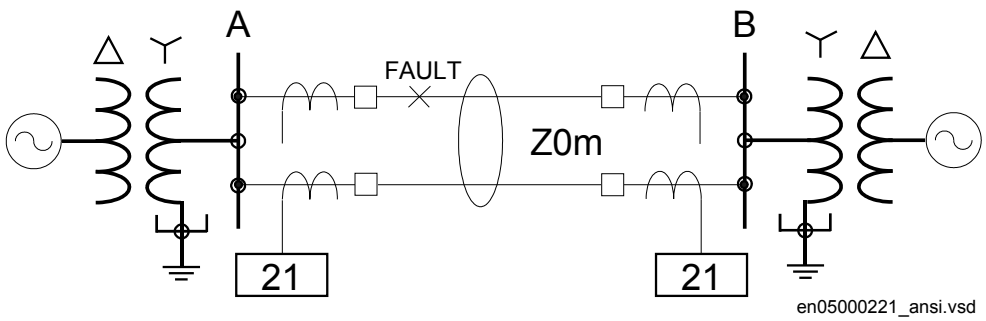

Figure 166: Class 1, parallel line in service.

The equivalent zero sequence circuit of the lines can be simplified, see figure 128.

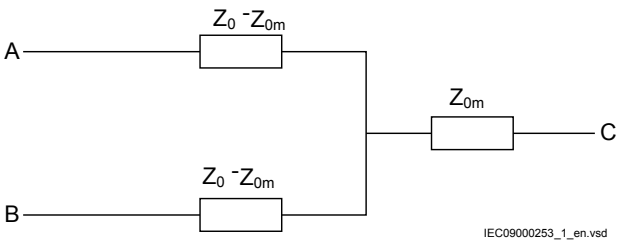

Figure 167: Equivalent zero sequence impedance circuit of the double-circuit, parallel, operating line with a single phase-to-ground fault at the remote busbar.

When mutual coupling is introduced, the voltage at the relay point A will be changed according to equation 131.

$$V_{ph} = \overline{Z}1_L \cdot \left(\overline{I}_{ph} + 3\overline{I}_0 \cdot \frac{\overline{Z}0_L - \overline{Z}1_L}{3 \cdot \overline{Z}1_L} + 3\overline{I}_{0p} \frac{\overline{Z}0_m}{3 \cdot \overline{Z}1_L} \right)$$

(Equation 260)

By dividing equation 131 by equation 130 and after some simplification we can write the impedance present to the relay at A side as:

$$Z = \overline{Z1_L} \left(1 + \frac{3\overline{I}0 \cdot \overline{K}Nm}{\overline{I}ph + 3\overline{I}0 \cdot \overline{K}N} \right)$$

(Equation 261)

Where:

KNm = Z0m/(3 · Z1L)

The second part in the parentheses is the error introduced to the measurement of the line impedance.

If the current on the parallel line has negative sign compared to the current on the protected line, that is, the current on the parallel line has an opposite direction compared to the current on the protected line, the distance function will overreach. If the currents have the same direction, the distance protection will underreach.

Maximum overreach will occur if the fault current infeed from remote line end is weak. If considering a single phase-to-ground fault at 'p' unit of the line length from A to B on the parallel line for the case when the fault current infeed from remote line end is zero, the voltage V_A in the faulty phase at A side as in equation 133.

$$\overline{V_A} = \mathrm{p} \cdot \overline{Z1_L} \left(\overline{I_{ph}} + \overline{K_N} \cdot 3\overline{I_0} + \overline{K_{Nm}} \cdot 3\overline{I_{0p}} \right)$$

(Equation 262)

One can also notice that the following relationship exists between the zero sequence currents:

$$3\overline{I_0} \cdot \overline{Z0_L} = 3\overline{I0_p} \cdot \overline{Z0_L} \left(2 - p\right)$$

(Equation 263)

Simplification of equation 134, solving it for 3I0p and substitution of the result into equation 133 gives that the voltage can be drawn as:

$$\overline{V_A} = \mathrm{p} \cdot \overline{Z1_L} \left(\overline{I_{ph}} + \overline{K_N} \cdot 3\overline{I_0} + \overline{K_{Nm}} \cdot \frac{3\overline{I_0} \cdot \mathrm{p}}{2 - \mathrm{p}} \right)$$

(Equation 264)

If we finally divide equation 135 with equation 130 we can draw the impedance present to the IED as

$$\overline{Z} = p \cdot \overline{ZI_L} \left(\frac{\overline{I_{ph}} + \overline{KN} \cdot 3\overline{I_0} + \overline{KN_m} \cdot \frac{3\overline{I_0} \cdot p}{2 - p}}{I_{ph} + 3\overline{I_0} \cdot \overline{KN}} \right)$$

(Equation 265)

Calculation for a 400 kV line, where we for simplicity have excluded the resistance, gives with X1L=0.48 Ohm/Mile, X0L=1.4Ohms/Mile, zone 1 reach is set to 90% of the line reactance p=71% that is, the protection is underreaching with approximately 20%.

The zero sequence mutual coupling can reduce the reach of distance protection on the protected circuit when the parallel line is in normal operation. The reduction of the reach is most pronounced with no current infeed in the IED closest to the fault. This reach reduction is normally less than 15%. But when the reach is reduced at one line end, it is proportionally increased at the opposite line end. So this 15% reach reduction does not significantly affect the operation of a permissive underreaching scheme.

Parallel line out of service and grounded

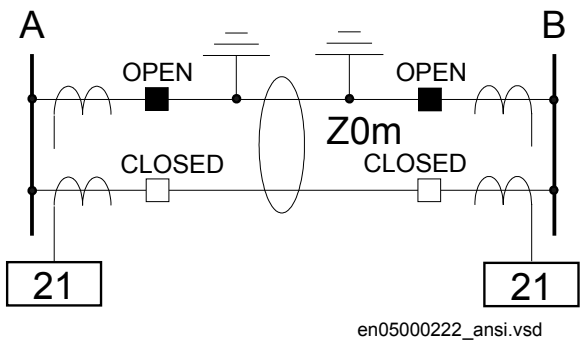

Figure 168: The parallel line is out of service and grounded.

When the parallel line is out of service and grounded at both line ends on the bus bar side of the line CTs so that zero sequence current can flow on the parallel line, the equivalent zero sequence circuit of the parallel lines will be according to figure 130.

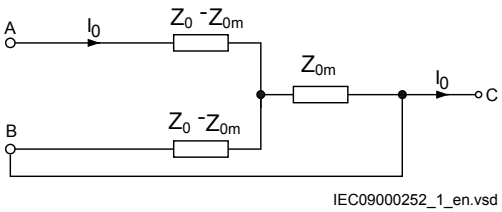

Figure 169: Equivalent zero sequence impedance circuit for the double-circuit line that operates with one circuit disconnected and grounded at both ends.

Here the equivalent zero sequence impedance is equal to Z_0-Z_0m in parallel with (Z_0-Z_{0m})/Z_0-Z_{0m}+Z_{0m} which is equal to equation 137.

$$\overline{Z}_E = \frac{\overline{Z}_0^2 - \overline{Z}_{om}^2}{\overline{Z}_0}$$

(Equation 266)

The influence on the distance measurement will be a considerable overreach, which must be considered when calculating the settings. It is recommended to use a separate setting group for this operation condition since it will reduce the reach considerably when the line is in operation.

All expressions below are proposed for practical use. They assume the value of zero sequence, mutual resistance R_{0m} equals to zero. They consider only the zero sequence, mutual reactance X_{0m}. Calculate the equivalent X_{0E} and R_{0E} zero sequence parameters according to equation 138 and equation 139 for each particular line section and use them for calculating the reach for the underreaching zone.

$$R_{0E} = R_0 \cdot \left(1 + \frac{X_{0m}^2}{R_0^2 + X_0^2} \right)$$

(Equation 267)

$$X_{0E} = X_0 \cdot \left(1 - \frac{X_{0m}^2}{R_0^2 + X_0^2} \right)$$

(Equation 268)

Parallel line out of service and not grounded

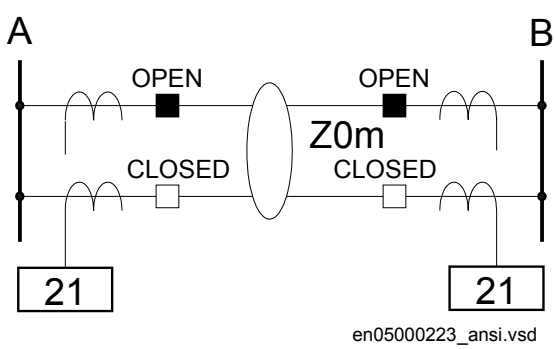

Figure 170: Parallel line is out of service and not grounded.

When the parallel line is out of service and not grounded, the zero sequence on that line can only flow through the line admittance to the ground. The line admittance is

high which limits the zero sequence current on the parallel line to very low values. In practice, the equivalent zero sequence impedance circuit for faults at the remote bus bar can be simplified to the circuit shown in figure 131

The line zero sequence mutual impedance does not influence the measurement of the distance protection in a faulty circuit.

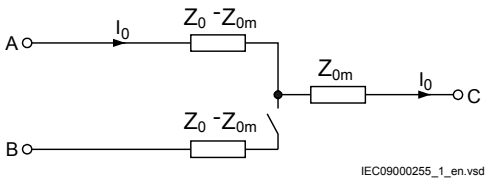

Figure 171: Equivalent zero sequence impedance circuit for a double-circuit line with one circuit disconnected and not grounded.

7.9.2.7 Tapped line application

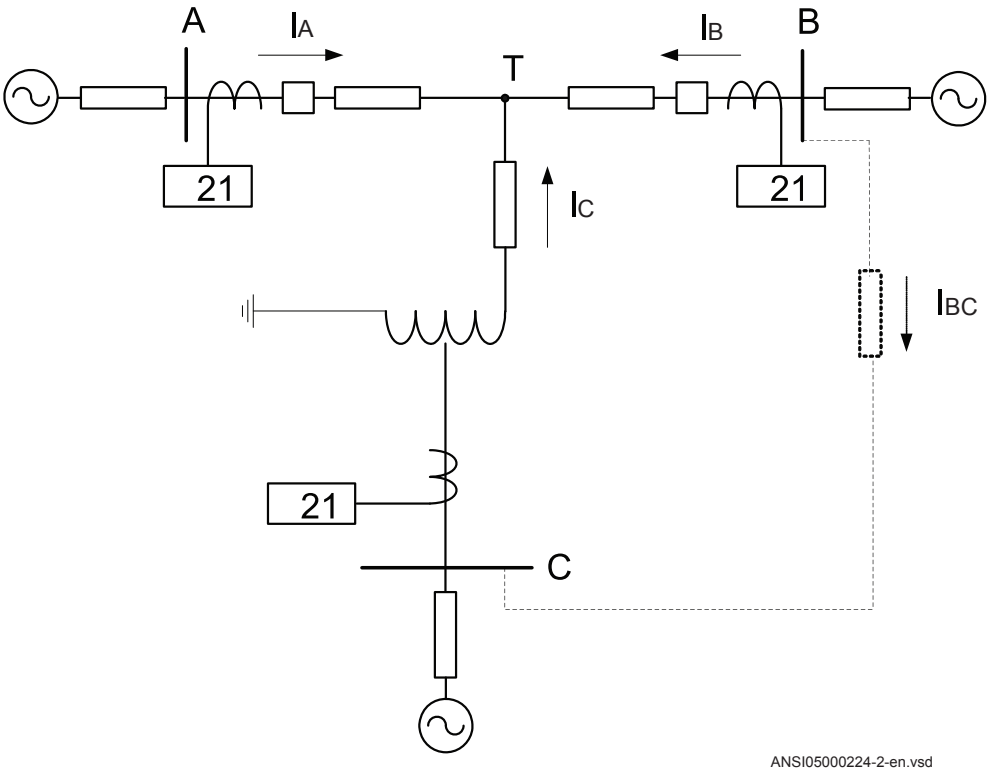

Figure 172: Example of tapped line with Auto transformer.

This application gives rise to similar problem that was highlighted in section "Fault infeed from remote end" , that is increased measured impedance due to fault current infeed. For example, for faults between the T point and B station the measured impedance at A and C will be

$$\bar{Z}_A = \bar{Z}_{AT} + \frac{\bar{I}_A + \bar{I}_C}{\bar{I}_A} \cdot \bar{Z}_{TF}$$

(Equation 269)

$$\bar{Z}_C = \bar{Z}_{Trf} + (\bar{Z}_{CT} + \frac{\dot{I}_A + \dot{I}_C}{\dot{I}_C} \cdot \bar{Z}_{TB}) \cdot (\frac{V2}{V1})^2$$

(Equation 270)

Where:

Z_{AT} and Z_{CT}	is the line impedance from the A respective C station to the T point.
I_A and I_C	is fault current from A respective C station for fault between T and B.
V2/V1	Transformation ratio for transformation of impedance at V1 side of the transformer to the measuring side V2 (it is assumed that current and voltage distance function is taken from V2 side of the transformer).
Z_{TF}	is the line impedance from the T point to the fault (F).
Z_{Trf}	Transformer impedance

For this example with a fault between T and B, the measured impedance from the T point to the fault will be increased by a factor defined as the sum of the currents from T point to the fault divided by the IED current. For the IED at C, the impedance on the high voltage side V1 has to be transferred to the measuring voltage level by the transformer ratio.

Another complication that might occur depending on the topology is that the current from one end can have a reverse direction for fault on the protected line. For example, for faults at T the current from B might go in reverse direction from B to C depending on the system parameters (see the dotted line in figure 133), given that the distance protection in B to T will measure wrong direction.

In three-end application, depending on the source impedance behind the IEDs, the impedances of the protected object and the fault location, it might be necessary to accept zone 2 trip in one end or sequential trip in one end.

Generally for this type of application it is difficult to select settings of zone 1 that both gives overlapping of the zones with enough sensitivity without interference with other

zone 1 settings, that is without selectivity conflicts. Careful fault calculations are necessary to determine suitable settings and selection of proper scheme communication.

Fault resistance

The performance of distance protection for single phase-to-ground faults is very important, because normally more than 70% of the faults on transmission lines are single phase-to-ground faults. At these faults, the fault resistance is composed of three parts: arc resistance, resistance of a tower construction, and tower-footing resistance.The resistance is also depending on the presence of ground shield conductor at the top of the tower, connecting tower-footing resistance in parallel. The arc resistance can be calculated according to Warrington's formula:

$$Rarc = \frac{28707 \cdot L}{I^{1.4}}$$

(Equation 271)

where:

L represents the length of the arc (in meters). This equation applies for the distance protection zone 1. Consider approximately three times arc foot spacing for the zone 2 and wind speed of approximately 30 m/h

I is the actual fault current in A.

In practice, the setting of fault resistance for both phase-to-ground*RFPG* and phase-to-phase *RFPP* should be as high as possible without interfering with the load impedance in order to obtain reliable fault detection.

7.9.3 Setting guidelines

7.9.3.1 General

The settings for Distance measuring zones, quadrilateral characteristic ((ZMRPDIS, 21) are done in primary values. The instrument transformer ratio that has been set for the analogue input module is used to automatically convert the measured secondary input signals to primary values used in (ZMRPDIS, 21).

The following basics must be considered, depending on application, when doing the setting calculations:

- Errors introduced by current and voltage instrument transformers, particularly under transient conditions.
- Inaccuracies in the line zero sequence impedance data, and their effect on the calculated value of the ground-return compensation factor.
- The effect of infeed between the IED and the fault location, including the influence of different Z_0/Z_1 ratios of the various sources.
- The phase impedance of non transposed lines is not identical for all fault loops. The difference between the impedances for different phase-to-ground loops can be as large as 5-10% of the total line impedance.
- The effect from load transfer together with fault resistance may be considerable in some extreme cases.
- Zero sequence mutual coupling from parallel lines.

7.9.3.2 Setting of zone 1

The different errors mentioned earlier usually require a limitation of the underreaching zone (normally zone 1) to 75 - 90% of the protected line.

In case of parallel lines, consider the influence of the mutual coupling according to section "Parallel line application with mutual coupling" and select the case(s) that are valid in the particular application. By proper setting it is possible to compensate for the cases when the parallel line is in operation, out of service and not grounded and out of service and grounded in both ends. The setting of ground-fault reach should be selected to be <95% also when parallel line is out of service and grounded at both ends (worst case).

7.9.3.3 Setting of overreaching zone

The first overreaching zone (normally zone 2) must detect faults on the whole protected line. Considering the different errors that might influence the measurement in the same way as for zone 1, it is necessary to increase the reach of the overreaching zone to at least 120% of the protected line. The zone 2 reach can be even longer if the fault infeed from adjacent lines at remote end are considerable higher than the fault current at the IED location.

The setting shall generally not exceed 80% of the following impedances:

- The impedance corresponding to the protected line, plus the first zone reach of the shortest adjacent line.
- The impedance corresponding to the protected line, plus the impedance of the maximum number of transformers operating in parallel on the bus at the remote end of the protected line.

Larger overreach than the mentioned 80% can often be acceptable due to fault current infeed from other lines. This requires however analysis by means of fault calculations.

If any of the above indicates a zone 2 reach less than 120%, the time delay of zone 2 must be increased by approximately 200ms to avoid unwanted operation in cases when the telecommunication for the short adjacent line at remote end is down during faults. The zone 2 must not be reduced below 120% of the protected line section. The whole line must be covered under all conditions.

The requirement that the zone 2 shall not reach more than 80% of the shortest adjacent line at remote end is highlighted in the example below.

If a fault occurs at point F see figure 134, the IED at point A senses the impedance:

$$\overline{Z}_{AF} = \frac{\overline{V}_A}{\overline{I}_A} = \overline{Z}_{AC} + \frac{\overline{I}_A + \overline{I}_C}{\overline{I}_A} \cdot \overline{Z}_{CF} + \frac{\overline{I}_A + \overline{I}_C + \overline{I}_B}{\overline{I}_A} \cdot R_F = \overline{Z}_{AC} + \left(1 + \frac{\overline{I}_C}{\overline{I}_A}\right) \cdot \overline{Z}_{CF} + \left(1 + \frac{\overline{I}_C + \overline{I}_B}{\overline{I}_A}\right) \cdot R_F$$

(Equation 272)

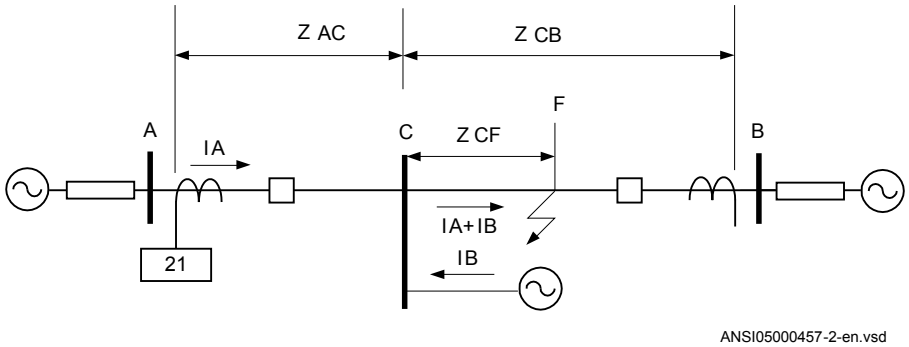

Figure 173: Setting of overreaching zone

7.9.3.4 Setting of reverse zone

The reverse zone is applicable for purposes of scheme communication logic, current reversal logic, weak-end infeed logic, and so on. The same applies to the back-up protection of the bus bar or power transformers. It is necessary to secure, that it always covers the overreaching zone, used at the remote line IED for the telecommunication purposes.

Consider the possible enlarging factor that might exist due to fault infeed from adjacent lines. Equation 149 can be used to calculate the reach in reverse direction when the zone is used for blocking scheme, weak-end infeed etc.

$$\overline{Z}_{rev} \geq 1.2 \cdot \left| \overline{Z}2_{rem} - \overline{Z}_L \right|$$

(Equation 273)

Where:

Z_L is the protected line impedance

$Z2_{rem}$ is zone 2 setting at remote end of protected line.

In many applications it might be necessary to consider the enlarging factor due to fault current infeed from adjacent lines in the reverse direction in order to obtain certain sensitivity.

7.9.3.5 Setting of zones for parallel line application

Parallel line in service – Setting of zone 1

With reference to section "Parallel line applications", the zone reach can be set to 85% of protected line.

However, influence of mutual impedance has to be taken into account.

Parallel line in service – setting of zone 2

Overreaching zones (in general, zones 2 and 3) must overreach the protected circuit in all cases. The greatest reduction of a reach occurs in cases when both parallel circuits are in service with a single phase-to-ground fault located at the end of a protected line. The equivalent zero sequence impedance circuit for this case is equal to the one in figure 128 in section "Parallel line applications".

The components of the zero sequence impedance for the overreaching zones must be equal to at least:

$$R_{0E} = R_0 + R_{m0}$$

(Equation 274)

$$X_{0E} = X_0 + X_{m0}$$

(Equation 275)

Check the reduction of a reach for the overreaching zones due to the effect of the zero sequence mutual coupling. The reach is reduced for a factor:

$$K0 = 1 - \frac{Z0m}{2 \cdot Z1 + Z0 + Rf}$$

(Equation 276)

If the denominator in equation 152 is called B and Z0m is simplified to X0m, then the real and imaginary part of the reach reduction factor for the overreaching zones can be written as:

$$\mathrm{Re}\left(\overline{K}0\right) = 1 - \frac{X0m \cdot \mathrm{Re}\left(B\right)}{\mathrm{Re}\left(B\right)^2 + \mathrm{Im}\left(B\right)^2}$$

(Equation 277)

$$\mathrm{Im}\left(\overline{K}0\right) = \frac{X0m \cdot \mathrm{Im}\left(B\right)}{\mathrm{Re}\left(B\right)^2 + \mathrm{Im}\left(B\right)^2}$$

(Equation 278)

Parallel line is out of service and grounded in both ends

Apply the same measures as in the case with a single set of setting parameters. This means that an underreaching zone must not overreach the end of a protected circuit for the single phase-to-ground faults.

Set the values of the corresponding zone (zero-sequence resistance and reactance) equal to:

$$R_{0E} = R_0 \cdot \left(1 + \frac{X_{m0}^2}{R_0^2 + X_0^2}\right)$$

(Equation 279)

$$X_{0E} = X_0 \cdot \left(1 - \frac{X_{m0}^2}{R_0^2 + X_0^2}\right)$$

(Equation 280)

7.9.3.6 Setting of reach in resistive direction

Set the resistive independently for each zone.

Set separately the expected fault resistance for phase-to-phase faults *RFPP* and for the phase-to-ground faults *RFPG* for each zone. For each distance zone, set all remaining reach setting parameters independently of each other.

The final reach in resistive direction for phase-to-ground fault loop measurement automatically follows the values of the line-positive and zero-sequence resistance, and at the end of the protected zone is equal to equation 157.

$$R = \frac{1}{3}\left(2 \cdot R1 + R0\right) + RFPG$$

(Equation 281)

$$\varphi loop = \arctan\left[\frac{2 \cdot X1 + X0}{2 \cdot R1 + R0}\right]$$

(Equation 282)

Setting of the resistive reach for the underreaching zone 1 should follow the condition to minimize the risk for overreaching:

$$RFPG \leq 4.5 \cdot X1$$

(Equation 283)

The fault resistance for phase-to-phase faults is normally quite low, compared to the fault resistance for phase-to-ground faults. To minimize the risk for overreaching, limit the setting of the zone1 reach in resistive direction for phase-to-phase loop measurement in the phase domain to:

$$RFPP \leq 6 \cdot X1$$

(Equation 284)

7.9.3.7 Load impedance limitation, without load encroachment function

The following instructions are valid when Phase selection with load enchroachment, quadrilateral characteristic function FRPSPDIS (21) is not activated. To deactivate the function, the setting of the load resistance *RLdFwd* and *RLdRev* in FRPSPDIS (21) must be set to max value (3000). If FRPSPDIS (21) is to be used for all or some of the measuring zones, the load limitation for those zones according to this chapter can be omitted. Check the maximum permissible resistive reach for any zone to ensure that there is a sufficient setting margin between the boundary and the minimum load impedance. The minimum load impedance (Ω/phase) is calculated as:

$$Z_{load\,min} = \frac{V^2}{S}$$

(Equation 285)

Where:

V is the minimum phase-to-phase voltage in kV

S is the maximum apparent power in MVA.

The load impedance [Ω/phase] is a function of the minimum operation voltage and the maximum load current:

$$Z_{load} = \frac{V_{min}}{\sqrt{3} \cdot I_{max}}$$

(Equation 286)

Minimum voltage V_{min} and maximum current I_{max} are related to the same operating conditions. Minimum load impedance occurs normally under emergency conditions.

As a safety margin is required to avoid load encroachment under three-phase conditions and to guarantee correct healthy phase IED operation under combined heavy three-phase load and ground faults, consider both: phase-to-phase and phase-to-ground fault operating characteristics.

To avoid load encroachment for the phase-to-ground measuring elements, the set resistive reach of any distance protection zone must be less than 80% of the minimum load impedance.

$$RFPG \leq 0.8 \cdot Z_{load}$$

(Equation 287)

This equation is applicable only when the loop characteristic angle for the single phase-to-ground faults is more than three times as large as the maximum expected load-impedance angle. For the case when the loop characteristic angle is less than three times the load-impedance angle, more accurate calculations are necessary according to equation 164.

$$RFPG \le 0.8 \cdot Z_{load\,\min} \cdot \left[\cos\partial - \frac{2 \cdot R1 + R0}{2 \cdot X1 + X0} \cdot \sin\partial \right]$$

(Equation 288)

Where:

∂ is a maximum load-impedance angle, related to the maximum load power.

To avoid load encroachment for the phase-to-phase measuring elements, the set resistive reach of any distance protection zone must be less than 160% of the minimum load impedance.

$$RFPP \le 1.6 \cdot Z_{load}$$

(Equation 289)

Equation 165 is applicable only when the loop characteristic angle for the phase-to-phase faults is more than three times as large as the maximum expected load-impedance angle. More accurate calculations are necessary according to equation 166.

$$RFPP \le 1.6 \cdot Z_{load\,\min} \cdot \left[\cos\vartheta - \frac{R1}{X1} \cdot \sin\vartheta \right]$$

(Equation 290)

All this is applicable for all measuring zones when no Power swing detection function ZMRPSB (78) is activated in the IED. Use an additional safety margin of approximately 20% in cases when a ZMRPSB (78) function is activated in the IED, refer to the description of Power swing detection function ZMRPSB (78).

7.9.3.8 Load impedance limitation, with Phase selection with load encroachment, quadrilateral characteristic function activated

The parameters for shaping of the load encroachment characteristic are found in the description of Phase selection with load encroachment, quadrilateral characteristic function (FRPSPDIS ,21).

7.9.3.9 Setting of minimum operating currents

The operation of Distance protection zone, quadrilateral characteristic (ZMQPDIS, 21) can be blocked if the magnitude of the currents is below the set value of the parameter *IMinPUPP* and *IMinPUPG*.

The default setting of *IMinPUPP* and *IMinPUPG* is 20% of *IBase* where *IBase* is the chosen current for the analogue input channels. The value has been proven in practice to be suitable in most of the applications. However, there might be applications where it is necessary to increase the sensitivity by reducing the minimum operating current down to 10% of *IBase*. This happens especially in cases, when the IED serves as a remote back-up protection on series of very long transmission lines.

Setting *IMinOpIR* blocks the phase-to-ground loop if $3I_0$<*IMinOpIR*. The default setting of *IMinOpIR* is 5% of *IBase*.

The minimum operating fault current is automatically reduced to 75% of its set value, if the distance protection zone has been set for the operation in reverse direction.

7.9.3.10 Setting of timers for distance protection zones

The required time delays for different distance protection zones are independent of each other. Distance protection zone 1 can also have a time delay, if so required for selectivity reasons. Time delays for all zones can be set in a range of 0 to 60 seconds. The tripping function of each particular zone can be inhibited by setting the corresponding *Operation* parameter to *Off*. Different time delays are possible for the phase-to-ground*tPG* and for the phase-to-phase *tPP* measuring loops in each distance protection zone separately, to further increase the total flexibility of a distance protection.

7.10 Phase selection, quadrilateral characteristic with settable angle FRPSPDIS (21)

7.10.1 Identification

Function description	IEC 61850 identification	IEC 60617 identification	ANSI/IEEE C37.2 device number
Phase selection, quadrilateral characteristic with settable angle	FRPSPDIS	*Z<phs*	21

7.10.2 Application

The operation of transmission networks today is in many cases close to the stability limit. The ability to accurately and reliably classify the different types of fault, so that single pole tripping and autoreclosing can be used plays an important role in this matter. Phase selection, quadrilateral characteristic with settable angle (FRPSPDIS, 21) is designed to accurately select the proper fault loop in the distance measuring function depending on the fault type.

The heavy load transfer that is common in many transmission networks may in some cases be in opposite to the wanted fault resistance coverage. Therefore, the function has a built in algorithm for load encroachment, which gives the possibility to enlarge the resistive setting of both the Phase selection with load encroachment and the measuring zones without interfering with the load.

A current-based phase selection is also included. The measuring elements continuously measure three phase currents and the residual current and, compare them with the set values.

The extensive output signals from FRPSPDIS (21) give also important information about faulty phase(s), which can be used for fault analysis.

Load encroachment

Each of the six measuring loops has its own load (encroachment) characteristic based on the corresponding loop impedance. The load encroachment functionality is always active, but can be switched off by selecting a high setting.

The outline of the characteristic is presented in figure 174. As illustrated, the resistive blinders are set individually in forward and reverse direction while the angle of the sector is the same in all four quadrants.

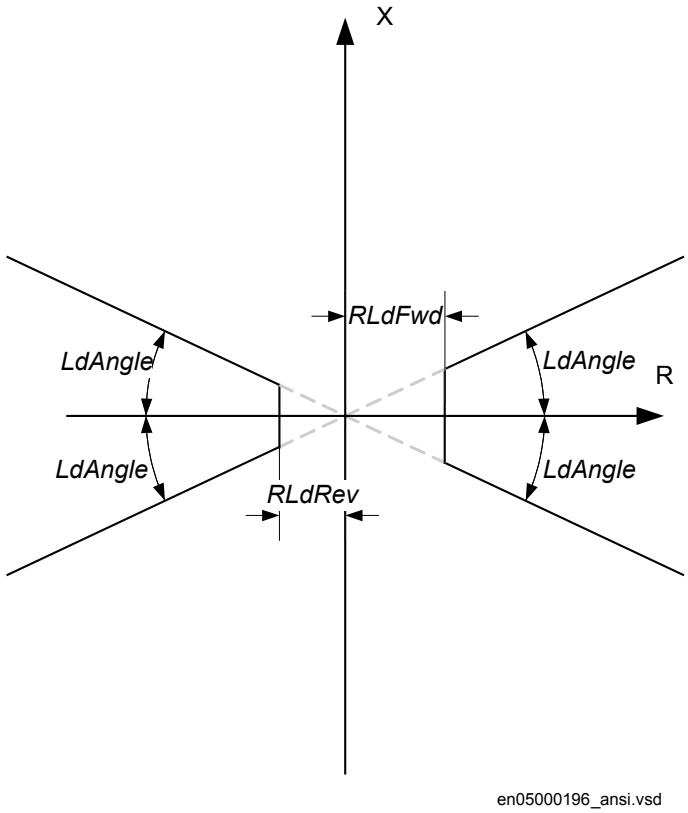

Figure 174: Characteristic of load encroachment function

The influence of load encroachment function on the operation characteristic is dependent on the chosen operation mode of the FRPSPDIS (21) function. When output signal PHSELZis selected, the characteristic for the FRPSPDIS (21) (and also zone measurement depending on settings) can be reduced by the load encroachment characteristic (as shown in figure 175).

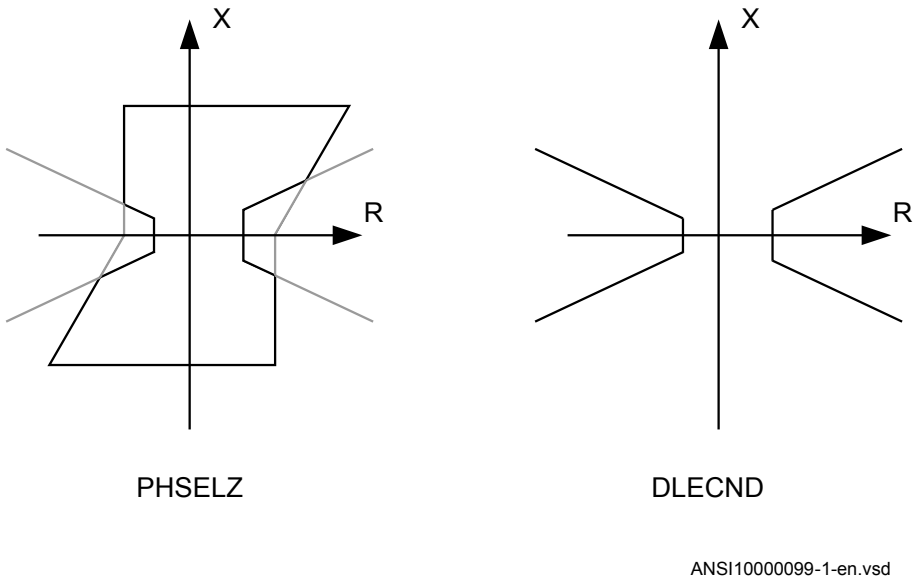

Figure 175: Operating characteristic when load encroachment is activated

When the "phase selection" is set to operate together with a distance measuring zone the resultant operate characteristic could look something like in figure 176. The figure shows a distance measuring zone operating in forward direction. Thus, the operating area of the zone together with the load encroachment area is highlighted in black.

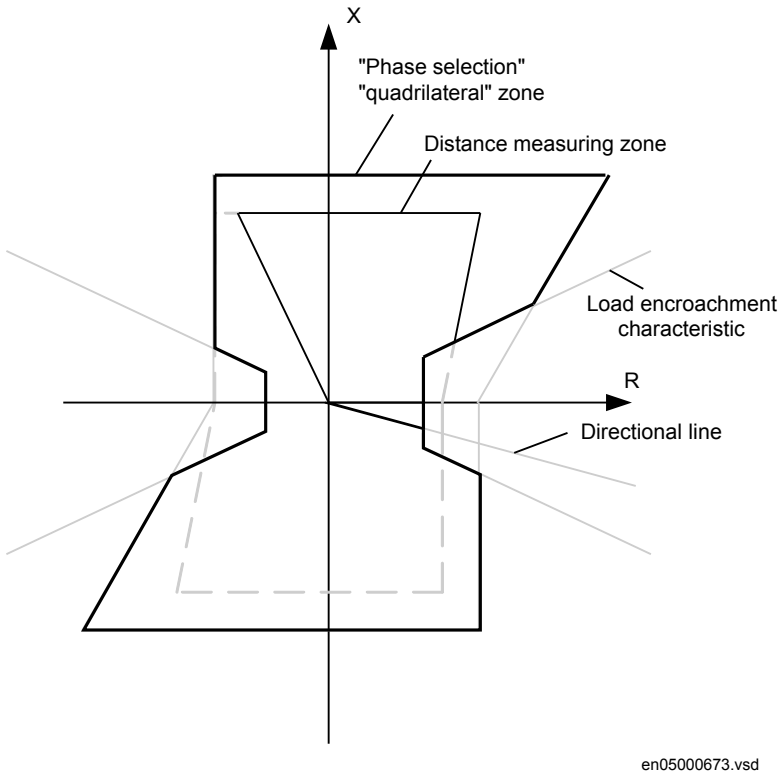

Figure 176: Operation characteristic in forward direction when load encroachment is enabled

Figure 176 is valid for phase-to-ground. During a three-phase fault, or load, when the "quadrilateral" phase-to-phase characteristic is subject to enlargement and rotation the operate area is transformed according to figure 177. Notice in particular what happens with the resistive blinders of the "phase selection" "quadrilateral" zone. Due to the 30-degree rotation, the angle of the blinder in quadrant one is now 100 degrees instead of the original 70 degrees. The blinder that is nominally located to quadrant four will at the same time tilt outwards and increase the resistive reach around the R-axis. Consequently, it will be more or less necessary to use the load encroachment characteristic in order to secure a margin to the load impedance.

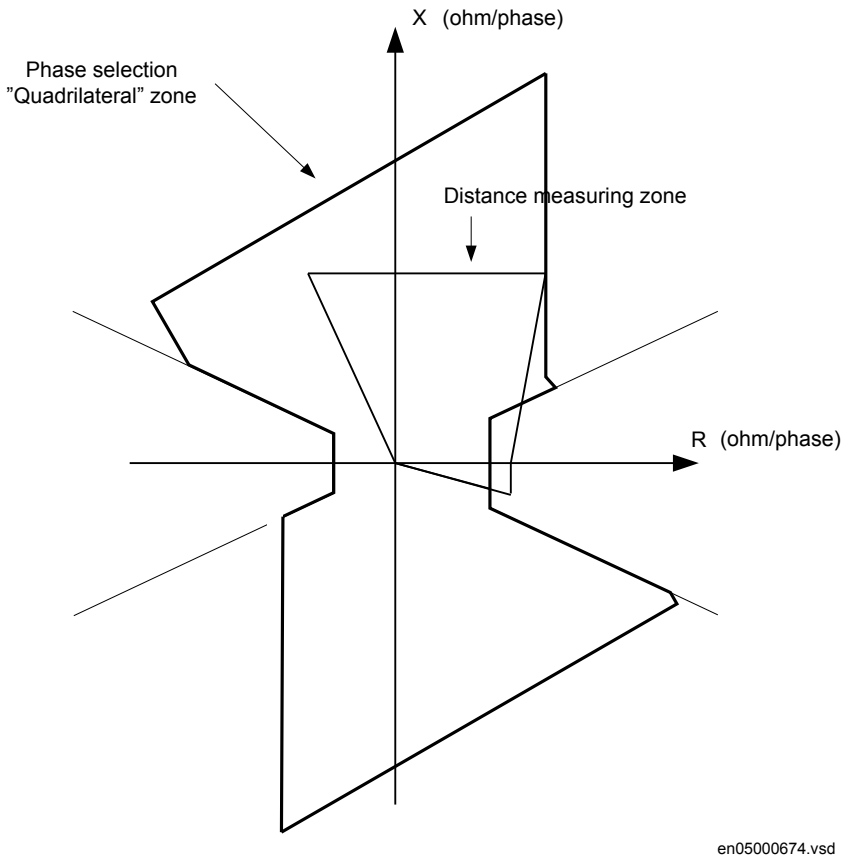

Figure 177: Operation characteristic for FRPSPDIS (21) in forward direction for three-phase fault, ohm/phase domain

The result from rotation of the load characteristic at a fault between two phases is presented in fig 178. Since the load characteristic is based on the same measurement as the quadrilateral characteristic, it will rotate with the quadrilateral characteristic clockwise by 30 degrees when subject to a pure phase-to-phase fault. At the same time, the characteristic "shrinks" by 2/√3, from the full RLdFw/RLdRv reach, which is valid at load or three-phase fault.

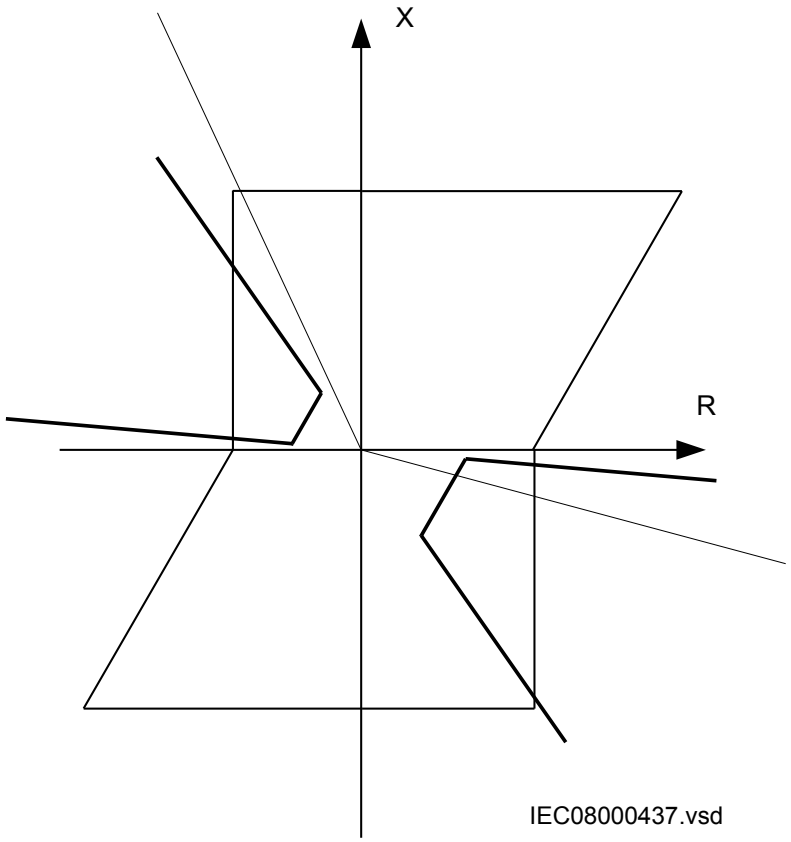

Figure 178: Rotation of load characteristic for a fault between two phases

This rotation may seem a bit awkward, but there is a gain in selectivity by using the same measurement as for the quadrilateral characteristic since not all phase-to-phase loops will be fully affected by a fault between two phases. It should also provide better fault resistive coverage in quadrant 1. The relative loss of fault resistive coverage in quadrant 4 should not be a problem even for applications on series compensated lines.

7.10.3 Load encroachment characteristics

The phase selector must at least cover the overreaching zone 2 in order to achieve correct phase selection for utilizing single-phase autoreclosing for faults on the entire line. It is not necessary to cover all distance protection zones. A safety margin of at least 10% is recommended. In order to get operation from distance zones, the phase selection output PHSELZ or PHSELI must be connected to input PHSEL on distance zones.

For normal overhead lines, the angle for the loop impedance φ for phase-to-ground fault defined according to equation 114.

$$\arctan \varphi = \frac{X1_L + XN}{R1_L + RN}$$

(Equation 291)

But in some applications, for instance cable lines, the angle of the loop might be less than the set angle. In these applications, the settings of fault resistance coverage in forward and reverse direction, *RFltFwdPG* and *RFltRevPG* for phase-to-ground faults and *RFltRevPP* and *RFltRevPP* for phase-to-phase faults have to be increased to avoid that the phase selection characteristic must cut off some part of the zone characteristic. The necessary increased setting of the fault resistance coverage can be derived from trigonometric evaluation of the basic characteristic for respectively fault type.

The following setting guideline considers normal overhead lines applications and provides two different setting alternatives:

A)	A recommended characteristic angle of 60 degrees for the phase selection
B)	A characteristic angle of 90 and 70 degrees for phase-to-ground and phase-to-phase respectively, like implemented in the REL500 series

The following figures illustrate alternative B).

7.10.3.1 Phase-to-ground fault in forward direction

With reference to figure 179, the following equations for the setting calculations can be obtained.

Index PHS in images and equations reference settings for Phase selection with load encroachment function (FRPSPDIS, 21) and index Zm reference settings for Distance protection function (ZMRPDIS).

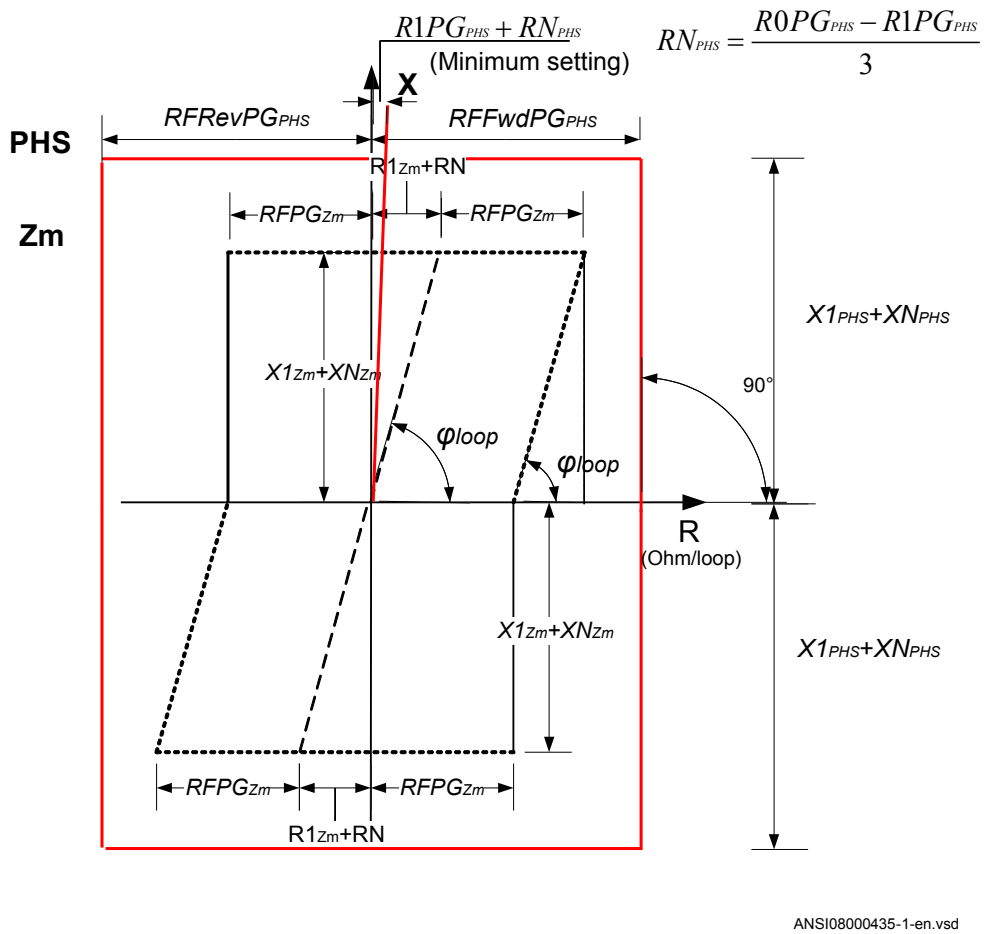

Figure 179: Relation between measuring zone and FRPSPDIS (21) characteristic

Reactive reach

The reactive reach in forward direction must as minimum be set to cover the measuring zone used in the Teleprotection schemes, mostly zone 2. Equation 115 and equation 116 gives the minimum recommended reactive reach.

These recommendations are valid for both 60 and 90 deg. characteristic angle.

$$X1_{PHS} \geq 1.44 \cdot X1_{Zm}$$

(Equation 292)

$$X0_{PHS} \geq 1.44 \cdot X0_{Zm}$$

(Equation 293)

where:

$X1_{Zm}$ is the reactive reach for the zone to be covered by FRPSPDIS (21), and the constant

1.44 is a safety margin

$X0_{Zm}$ is the zero-sequence reactive reach for the zone to be covered by FRPSPDIS (21)

The reactive reach in reverse direction is automatically set to the same reach as for forward direction. No additional setting is required.

Fault resistance reach

The resistive reach must cover *RFPG* for the overreaching zone to be covered, mostly zone 2. Consider the longest overreaching zone if correct fault selection is important in the application. Equation 294 and 295 gives the minimum recommended resistive reach.

A) 60 degrees

$$RFFwPG \geq 1.1 \cdot RFPGZm$$

(Equation 294)

B) 90 degrees

$$RFFwPG > \frac{1}{3} \cdot \left(2 \cdot R1PGZm + R0PGZm\right) + RFPGZm$$

(Equation 295)

The security margin has to be increased in the case where φloop<60° to avoid that FRPSPDIS (21) characteristic cuts off some part of the zone measurement characteristic.

RFFwPP and *RFFRvPP* must be set in a way that the loop characteristic angle can be 60 degrees (or alternatively the same or lower compared to the measuring zone that must be covered). If the characteristic angle for IEDs in the 500 series of 90 degrees is desired, *RFFwPP* and *RFFRvPP* must be set to minimum setting values.

7.10.3.2 Phase-to-ground fault in reverse direction

Reactive reach

The reactive reach in reverse direction is the same as for forward so no additional setting is required.

Resistive reach

The resistive reach in reverse direction must be set longer than the longest reverse zones. In blocking schemes it must be set longer than the overreaching zone at remote end that is used in the communication scheme. In equation 118 the index ZmRv references the specific zone to be coordinated to.

$$\mathrm{RFltREvPG} \geq 1.2 \cdot \mathrm{RFPG}_{\mathrm{ZmRv}}$$

(Equation 296)

7.10.3.3 Phase-to-phase fault in forward direction

Reactive reach

The reach in reactive direction is determined by phase-to-ground reach setting *X1*. No extra setting is required.

Resistive reach

R1PE and *R0PE* must be set in a way that the loop characteristic angle can be 60 deg (this gives a characteristic angle of 90 deg. at three-phase faults). If the 500-series characteristic angle of 70 deg. is desired, *R1PE* and *R0PE* must be set accordingly.

Fault resistance reach

The fault resistance reaches in forward direction *RFItFwdPP*, must cover $RFPP_{Zm}$ with at least 25% margin. $RFPP_{Zm}$ is the setting of fault resistance for phase-to-phase fault for the longest overreaching zone to be covered by FRPSPDIS (21), as shown in figure 120. The minimum recommended reach can be calculated according to equation 297 and 298.

Index PHS in images and equations reference settings for Phase selection, quadrilateral characteristic with settable angle function FRPSPDIS (21)and index Zm reference settings for Distance protection function ZMRPDIS.

A) 60°

$$RFltFwdPP \geq 1.25 \cdot RFPP_{zm}$$

(Equation 297)

B) 70°

$$RFFwdPP > 1.82 \cdot R1PP_{Zm} + 0.32 \cdot X1PP_{Zm} + 0.91 \cdot RFPP_{Zm}$$

(Equation 298)

where:

$RFPP_{Zm}$ is the setting of the longest reach of the overreaching zones that must be covered by FRPSPDIS (21).

Equation 297 and 298 are is also valid for three-phase fault. The proposed margin of 25% will cater for the risk of cut off of the zone measuring characteristic that might occur at three-phase fault when FRPSPDIS (21)characteristic angle is changed from 60 degrees to 90 degrees or from 70 degrees to 100 degrees (rotated 30° anti-clock wise).

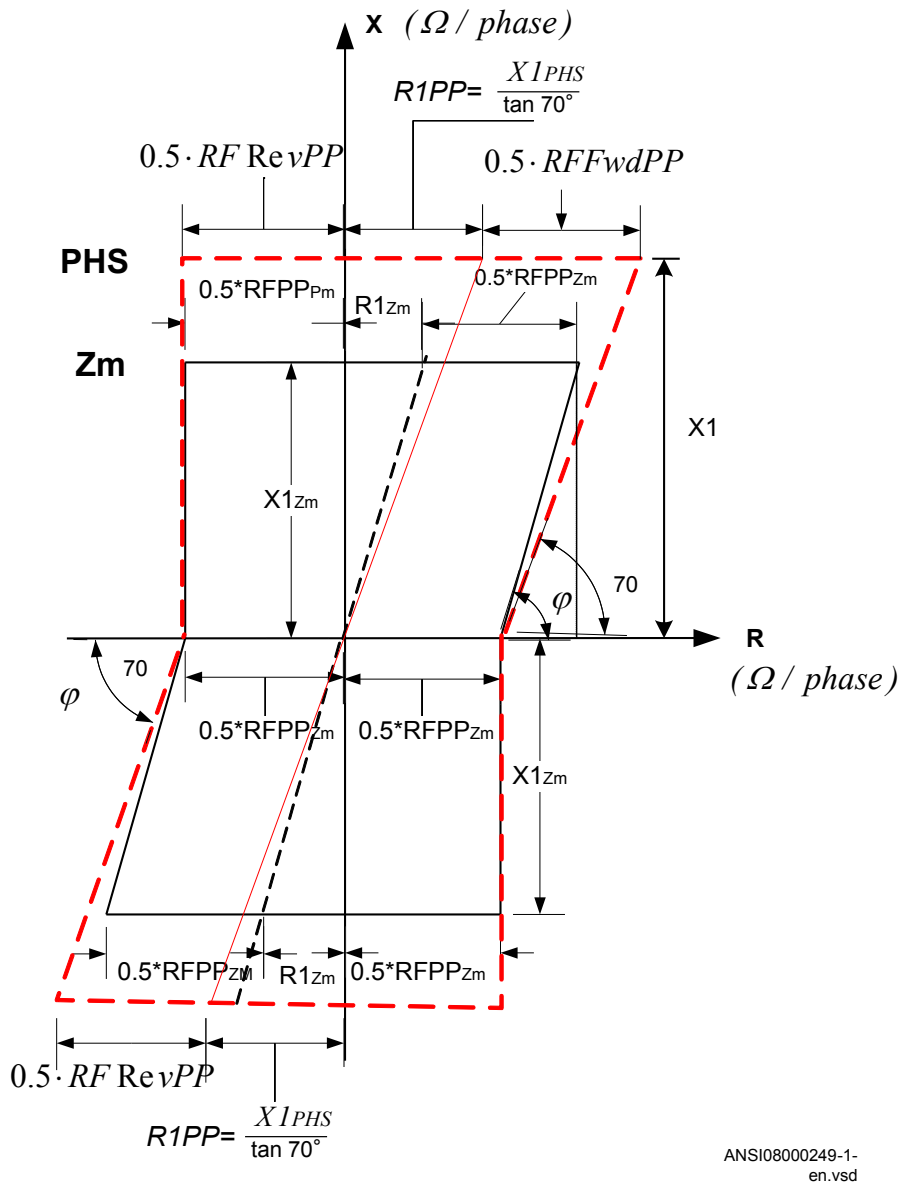

Figure 180: Relation between measuring zone and FRPSPDIS (21) characteristic for phase-to-phase fault for φline>70° (setting parameters in italic)

7.10.4 Setting guidelines

The following setting guideline consider normal overhead lines applications where φloop and φline is greater than 60°.

7.10.4.1 Resistive reach with load encroachment characteristic

The procedure for calculating the settings for the load encroachment consist basically to define the load angle *LdAngle*, the blinder *RLdFwd* in forward direction and blinder *RLdRev* in reverse direction, as shown in figure 121.

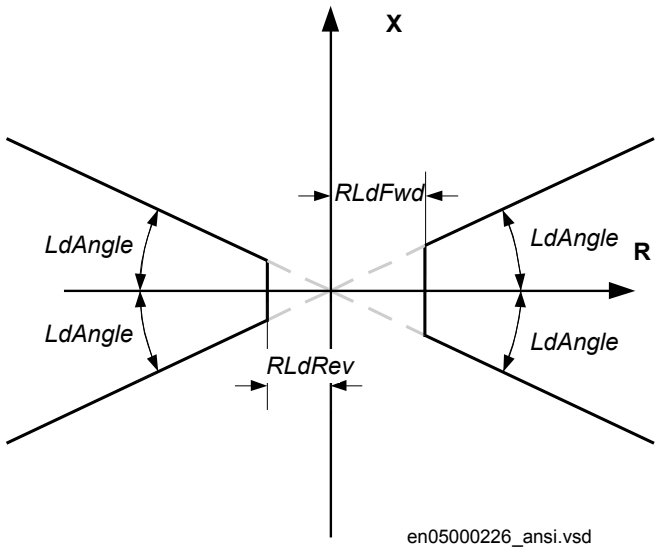

Figure 181: Load encroachment characteristic

The load angle *LdAngle* is the same in forward and reverse direction, so it could be suitable to begin to calculate the setting for that parameter. Set the parameter to the maximum possible load angle at maximum active load. A value bigger than 20° must be used.

The blinder in forward direction, *RLdFwd*, can be calculated according to equation 121.

$$RLdFwd = 0.8 \cdot \frac{V^2 \min}{P \exp \max}$$

where:

*P*exp max	is the maximum exporting active power
*V*min	is the minimum voltage for which the Pexp max occurs
0.8	is a security factor to ensure that the setting of *RLdFwd* can be lesser than the calculated minimal resistive load.

The resistive boundary *RLdRev* for load encroachment characteristic in reverse direction can be calculated in the same way as *RLdFwd*, but use maximum importing

power that might occur instead of maximum exporting power and the relevant Vmin voltage for this condition.

7.10.4.2 Minimum operate currents

FRPSPDIS (21) has two current setting parameters, which blocks the respective phase-to-ground loop and phase-to-phase loop if the RMS value of the phase current (ILn) and phase difference current (ILmILn) is below the settable threshold.

The threshold to activate the phase selector for phase-to-ground (*IMinPUPG*) is set to the default value or a level to securely detect a single line-to-ground fault at the furthest reach of the phase selection. It is recommended to set *IMinPUPP* to double value of *IMinPUPG*.

The threshold for opening the measuring loop for phase-to-ground fault (*3I0Enable_PG*) is set securely detect single line-to-ground fault at remote end on the protected line. It is recommended to set *INBlockPP* to double value of *3I0Enable_PG*.

7.11 Phase selection, quadrilateral characteristic with fixed angle FDPSPDIS (21)

7.11.1 Identification

7.11.1.1 Identification

Function description	IEC 61850 identification	IEC 60617 identification	ANSI/IEEE C37.2 device number
Phase selection with load encroachment, quadrilateral characteristic	FDPSPDIS	*Z<phs*	21

7.11.2 Application

The operation of transmission networks today is in many cases close to the stability limit. The ability to accurately and reliably classify the different types of fault, so that single pole tripping and autoreclosing can be used plays an important role in this matter. Phase selection with load encroachment function FDPSPDIS (21) is designed to accurately select the proper fault loop in the distance measuring function depending on the fault type.

The heavy load transfer that is common in many transmission networks may in some cases be in opposite to the wanted fault resistance coverage. Therefore, the function has a built in algorithm for load encroachment, which gives the possibility to enlarge the resistive setting of both the Phase selection with load encroachment and the measuring zones without interfering with the load.

A current-based phase selection is also included. The measuring elements continuously measure three phase currents and the residual current and, compare them with the set values.

The extensive output signals from FDPSPDIS (21) give also important information about faulty phase(s), which can be used for fault analysis.

7.11.3 Setting guidelines

The following setting guideline consider normal overhead lines applications where φloop and φline is greater than 60°.

7.11.3.1 Load encroachment characteristics

The phase selector must at least cover the overreaching zone 2 in order to achieve correct phase selection for utilizing single-phase autoreclosing for faults on the entire line. It is not necessary to cover all distance protection zones. A safety margin of at least 10% is recommended. In order to get operation from distance zones , the phase selection outputs PHSELZ or DLECND must be connected to input PHSEL on ZMQPDIS (21), distance measuring block.

For normal overhead lines, the angle for the loop impedance φ for phase-to-ground fault is defined according to equation 114.

$$\arctan \varphi = \frac{X1_L + XN}{R1_L + RN}$$

(Equation 301)

In some applications, for instance cable lines, the angle of the loop might be less than 60°. In these applications, the settings of fault resistance coverage in forward and reverse direction, *RFltFwdPG* and *RFltRevPG* for phase-to-ground faults and *RFltRevPP* and *RFltRevPP* for phase-to-phase faults have to be increased to avoid that FDPSPDIS (21) characteristic shall cut off some part of the zone characteristic. The necessary increased setting of the fault resistance coverage can be derived from trigonometric evaluation of the basic characteristic for respectively fault type.

Phase-to-ground fault in forward direction

With reference to figure 119, the following equations for the setting calculations can be obtained.

Index PHS in images and equations reference settings for Phase selection with load encroachment function FDPSPDIS (21) and index Zm reference settings for Distance protection function (ZMQPDIS, 21).

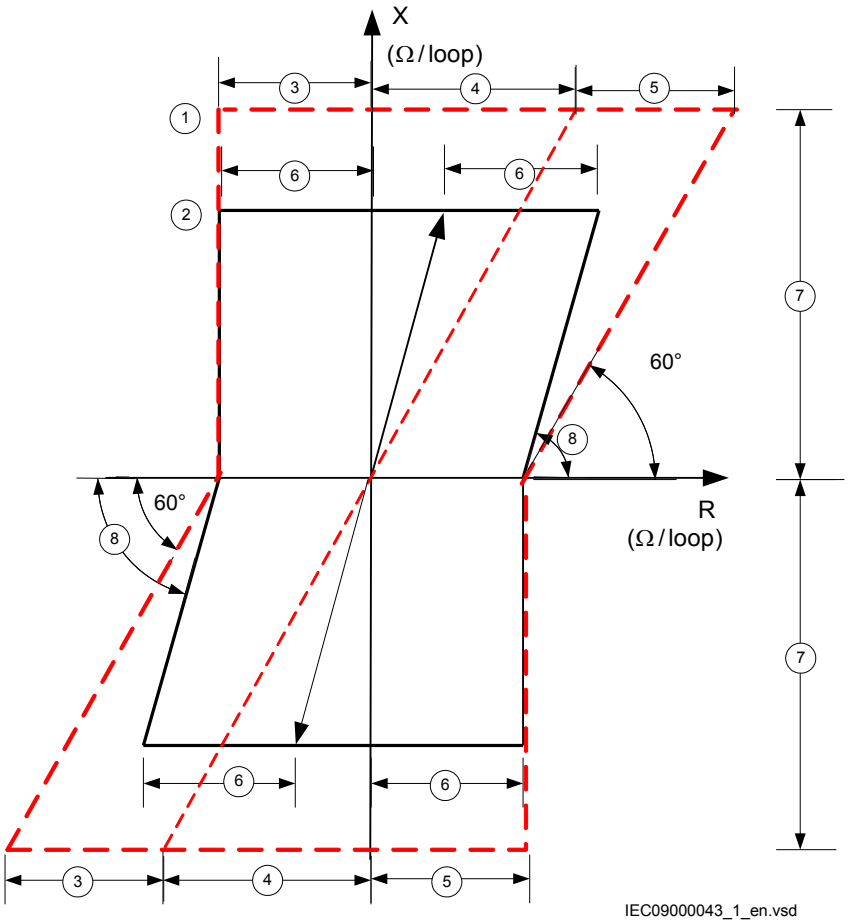

Figure 182: Relation between distance protection phase selection (FDPSPDIS) (21) and impedance zone (ZMQPDIS) (21) for phase-to-ground fault φloop>60° (setting parameters in italic)

1 FDPSPDIS (phase selection)(21) (red line)

2 ZMQPDIS (Impedance protection zone)(21)

3 $RFltRevPG_{PHS}$

4 ($X1_{PHS}$+XN)/tan(60°)

5 $RFltFwdPG_{PHS}$

6 $RFPG_{ZM}$

7 $X1_{PHS}$+XN

8 φloop

9 $X1_{ZM}$+XN

Reactive reach

The reactive reach in forward direction must as minimum be set to cover the measuring zone used in the Teleprotection schemes, mostly zone 2. Equation 115 and equation 116 gives the minimum recommended reactive reach.

$$X1_{PHS} \geq 1.44 \cdot X1_{Zm}$$

(Equation 302)

$$X0_{PHS} \geq 1.44 \cdot X0_{Zm}$$

(Equation 303)

where:

$X1_{Zm}$ is the reactive reach for the zone to be covered by FDPSPDIS (21), and the constant

1.44 is a safety margin

$X0_{Zm}$ is the zero-sequence reactive reach for the zone to be covered by FDPSPDIS (21)

The reactive reach in reverse direction is automatically set to the same reach as for forward direction. No additional setting is required.

Fault resistance reach

The resistive reach must cover *RFPG* for the overreaching zone to be covered, mostly zone 2. Consider the longest overreaching zone if correct fault selection is important in the application. Equation 117 gives the minimum recommended resistive reach.

$$RFltFwdPG_{min} \geq 1.1 \cdot RFPG_{zm}$$

(Equation 304)

where:

$RFPG_{Zm}$ is the setting *RFPG* for the longest overreaching zone to be covered by FDPSPDIS (21).

The security margin has to be increased to at least 1.2 in the case where φloop<60° to avoid that FDPSPDIS (21) characteristic shall cut off some part of the zone measurement characteristic.

Phase-to-ground fault in reverse direction

Reactive reach

The reactive reach in reverse direction is the same as for forward so no additional setting is required.

Resistive reach

The resistive reach in reverse direction must be set longer than the longest reverse zones. In blocking schemes it must be set longer than the overreaching zone at remote end that is used in the communication scheme. In equation 118 the index ZmRv references the specific zone to be coordinated to.

$$\mathrm{RFltREvPG} \geq 1.2 \cdot \mathrm{RFPG}_{\mathrm{ZmRv}}$$

(Equation 305)

Phase-to-phase fault in forward direction

Reactive reach

The reach in reactive direction is determined by phase-to-ground reach setting *X1*. No extra setting is required.

Resistive reach

In the same way as for phase-to-ground fault, the reach is automatically calculated based on setting *X1*. The reach will be X1/tan(60°) =X1/√(3).

Fault resistance reach

The fault resistance reaches in forward direction *RFItFwdPP*, must cover $RFPP_{Zm}$ with at least 25% margin. $RFPP_{Zm}$ is the setting of fault resistance for phase-to-phase fault for the longest overreaching zone to be covered by FDPSPDIS (21), see Figure 120. The minimum recommended reach can be calculated according to equation 119.

$$RFltFwdPP \geq 1.25 \cdot RFPP_{zm}$$

(Equation 306)

where:

$RFPP_{Zm}$ is the setting of the longest reach of the overreaching zones that must be covered by FDPSPDIS (21).

Equation 119 modified is applicable also for the *RFltRevPP* as follows:

$$RFlt\,\mathrm{Re}\,vPP_{\min} \geq 1.25 \cdot RFPP_{zmRv}$$

(Equation 307)

Equation 119 is also valid for three-phase fault. The proposed margin of 25% will cater for the risk of cut off of the zone measuring characteristic that might occur at three-phase fault when FDPSPDIS (21) characteristic angle is changed from 60 degrees to 90 degrees (rotated 30° anti-clock wise).

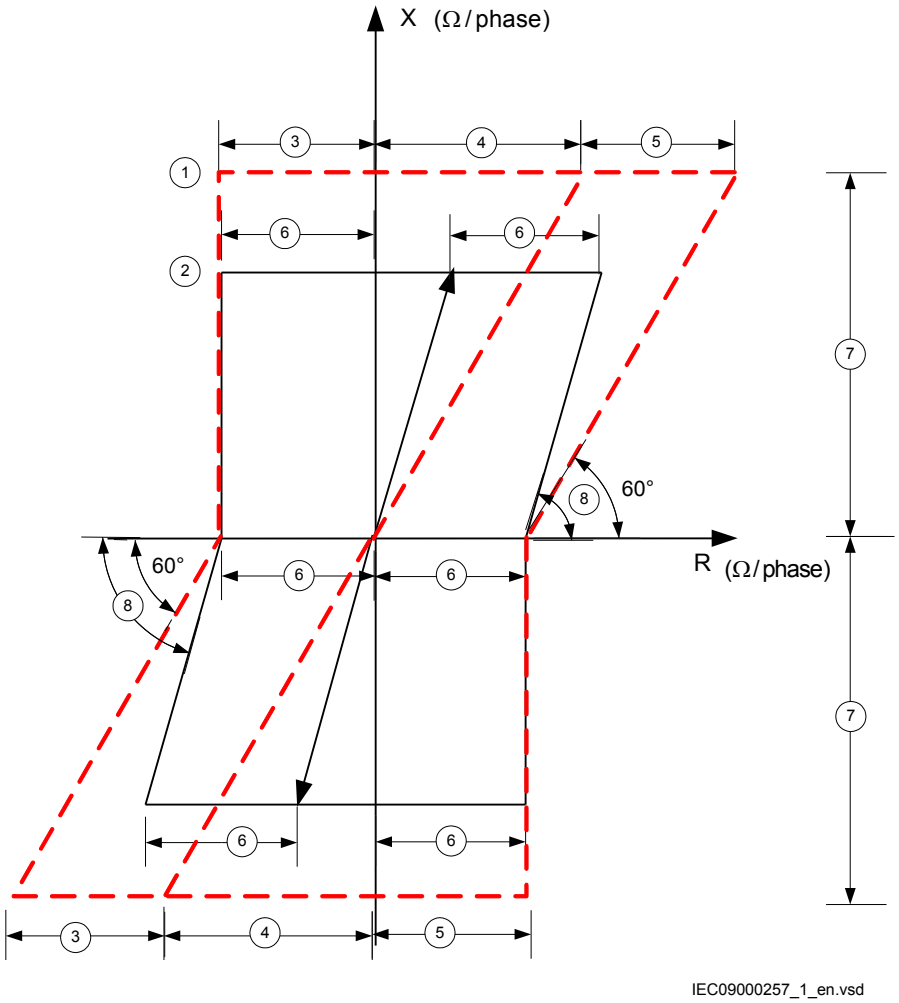

Figure 183: Relation between distance protection (ZMQPDIS) (21) and FDPSPDIS (21) characteristic for phase-to-phase fault for φline>60° (setting parameters in italic)

1 FDPSPDIS (phase selection)(21) (red line)

2 ZMQPDIS (Impedance protection zone) (21)

3 0.5 · $RFltRevPP_{PHS}$

4 $\frac{X1_{PHS}}{\tan(60°)}$

5 0.5 · $RFltFwdPP_{PHS}$

6 0.5 · $RFPP_{Zm}$

7 $X1_{PHS}$

8 $X1_{Zm}$

7.11.3.2 Resistive reach with load encroachment characteristic

The procedure for calculating the settings for the load encroachment consist basically to define the load angle *LdAngle*, the blinder *RLdFwd* in forward direction and blinder *RLdRev* in reverse direction, as shown in figure 121.

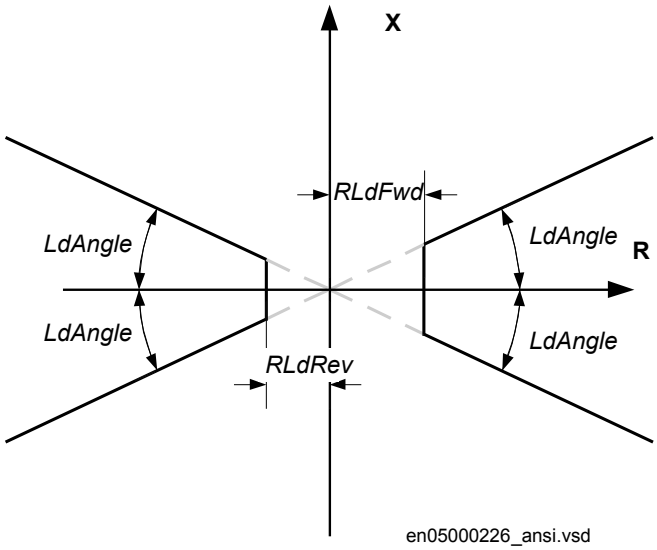

Figure 184: Load encroachment characteristic

The load angle *LdAngle* is the same in forward and reverse direction, so it could be suitable to begin to calculate the setting for that parameter. Set the parameter to the maximum possible load angle at maximum active load. A value bigger than 20° must be used.

The blinder in forward direction, *RLdFwd*, can be calculated according to equation 121.

$$RLdFwd = 0.8 \cdot \frac{V^2 \min}{P \exp \max}$$

where:

*P*exp max	is the maximum exporting active power
*V*min	is the minimum voltage for which the Pexp max occurs
0.8	is a security factor to ensure that the setting of *RLdFwd* can be lesser than the calculated minimal resistive load.

The resistive boundary *RLdRev* for load encroachment characteristic in reverse direction can be calculated in the same way as *RLdFwd*, but use maximum importing power that might occur instead of maximum exporting power and the relevant Vmin voltage for this condition.

7.11.3.3 Minimum operate currents

FDPSPDIS (21) has two current setting parameters which blocks the respective phase-to-ground loop and phase-to-phase loop if the RMS value of the phase current (ILn) and phase difference current (ILmILn) is below the settable threshold.

The threshold to activate the phase selector for phase-to-ground (*IMinPUPG*) is set to securely detect a single phase-to-ground fault at the furthest reach of the phase selection. It is recommended to set *IMinPUPP* to double value of *IMinPUPG*.

The threshold for opening the measuring loop for phase-to-ground fault (*3I0Enable_PG*) is set securely detect single line-to-ground fault at remote end on the protected line. It is recommended to set *3I0BLK_PP* to double value of *3I0Enable_PG*.

7.12 High speed distance protection ZMFPDIS (21)

7.12.1 Identification

Function description	IEC 61850 identification	IEC 60617 identification	ANSI/IEEE C37.2 device number
High speed distance protection zone (zone 1)	ZMFPDIS	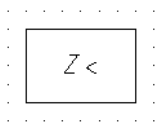	21

7.12.2 Application

The fast distance protection function ZMFPDIS in the IED is designed to provide sub-cycle, down to half-cycle, operating time for basic faults. At the same time, it is specifically designed for extra care during difficult conditions in high-voltage transmission networks, like faults on long heavily loaded lines and faults generating heavily distorted signals. These faults are handled with utmost security and dependability, although sometimes with a reduced operating speed.

7.12.2.1 System grounding

The type of system grounding plays an important role when designing the protection system. Some hints with respect to distance protection are highlighted below.

Solidly grounded networks

In solidly grounded systems, the transformer neutrals are connected directly to ground without any impedance between the transformer neutral and ground.

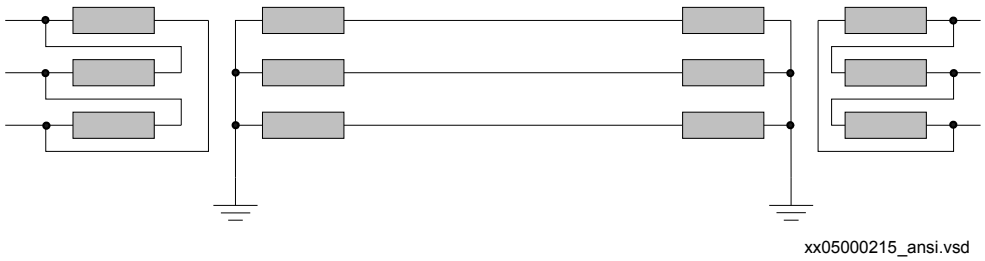

Figure 185: Solidly grounded network

The ground-fault current is as high or even higher than the short-circuit current. The series impedances determine the magnitude of the fault current. The shunt admittance has very limited influence on the ground-fault current. The shunt admittance may, however, have some marginal influence on the ground-fault current in networks with long transmission lines.

The ground-fault current at single phase-to-ground in phase A can be calculated as equation 122:

$$3I_0 = \frac{3 \cdot V_A}{Z_1 + Z_2 + Z_0 + 3Z_f} = \frac{V_A}{Z_1 + Z_N + Z_f}$$

(Equation 309)

Where:

VA	is the phase-to-ground voltage (kV) in the faulty phase before fault
Z_1	is the positive sequence impedance (Ω/phase)
Z_2	is the negative sequence impedance (Ω/phase)
Z_0	is the zero sequence impedance (Ω/phase)
Z_f	is the fault impedance (Ω), often resistive
Z_N	is the ground-return impedance defined as $(Z_0-Z_1)/3$

The voltage on the healthy phases during line to ground fault is generally lower than 140% of the nominal phase-to-ground voltage. This corresponds to about 80% of the nominal phase-to-phase voltage.

The high zero-sequence current in solidly grounded networks makes it possible to use impedance measuring techniques to detect ground faults. However, distance protection has limited possibilities to detect high resistance faults and should therefore always be complemented with other protection function(s) that can carry out the fault clearance in those cases.

Effectively grounded networks

A network is defined as effectively grounded if the ground-fault factor f_e is less than 1.4. The ground-fault factor is defined according to Equation 43.

$$f_e = \left| \frac{V_{max}}{V_{pn}} \right|$$

(Equation 310)

Where:

V_{max}	is the highest fundamental frequency voltage on one of the healthy phases at single phase-to-ground fault.
V_{pn}	is the phase-to-ground fundamental frequency voltage before fault.

Another definition for effectively grounded network is when the following relationships between the symmetrical components of the network impedances are valid, see Equation 124 and Equation 125.

$$X_0 < 3 \cdot X_1$$

(Equation 311)

$$R_0 \le R_1$$

(Equation 312)

Where

R_0	is the resistive zero sequence of the source
X_0	is the reactive zero sequence of the source
R_1	is the resistive positive sequence of the source
X_1	is the reactive positive sequence of the source

The magnitude of the ground-fault current in effectively grounded networks is high enough for impedance measuring elements to detect ground faults. However, in the same way as for solidly grounded networks, distance protection has limited possibilities to detect high resistance faults and should therefore always be complemented with other protection function(s) that can carry out the fault clearance in this case.

High impedance grounded networks

In high impedance networks, the neutral of the system transformers are connected to the ground through high impedance, mostly a reactance in parallel with a high resistor.

This type of network is many times operated radially, but can also be found operating as a meshed network.

What is typical for this type of network is that the magnitude of the ground-fault current is very low compared to the short circuit current. The voltage on the healthy phases will get a magnitude of √3 times the phase voltage during the fault. The zero sequence voltage ($3V_0$) will have the same magnitude in different places in the network due to low voltage drop distribution.

The magnitude of the total fault current can be calculated according to Equation .

$$3I_0 = \sqrt{I_R^2 + \left(I_L - I_C\right)^2}$$

(Equation 313)

Where:

$3I_0$	is the ground-fault current (A)
IR	is the current through the neutral point resistor (A)
IL	is the current through the neutral point reactor (A)
IC	is the total capacitive ground-fault current (A)

The neutral point reactor is normally designed so that it can be tuned to a position where the reactive current balances the capacitive current from the network that is:

$$\omega L = \frac{1}{3 \cdot \omega \cdot C}$$

(Equation 314)

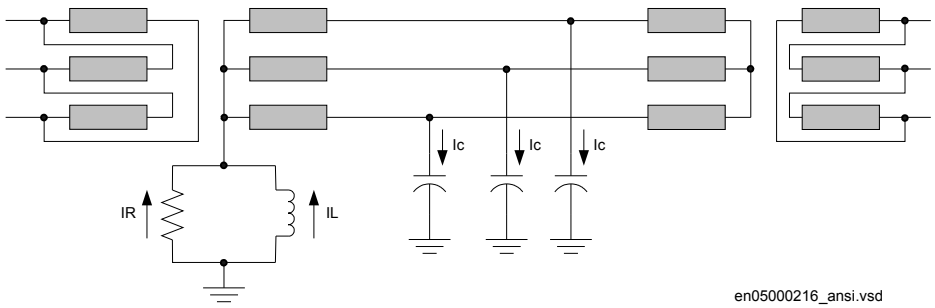

Figure 186: High impedance grounded network

The operation of high impedance grounded networks is different compared to solid grounded networks where all major faults have to be cleared very fast. In high impedance grounded networks, some system operators do not clear single phase-to-ground faults immediately; they clear the line later when it is more convenient. In case of cross-country faults, many network operators want to selectively clear one of the two ground faults.

In this type of network, it is mostly not possible to use distance protection for detection and clearance of ground faults. The low magnitude of the ground-fault current might not give pickup of the zero-sequence measurement elements or the sensitivity will be too low for acceptance. For this reason a separate high sensitive ground-fault protection is necessary to carry out the fault clearance for single phase-to-ground fault.

7.12.2.2 Fault infeed from remote end

All transmission and most all sub-transmission networks are operated meshed. Typical for this type of network is that fault infeed from remote end will happen when fault occurs on the protected line. The fault current infeed will enlarge the fault impedance seen by the distance protection. This effect is very important to keep in mind when both planning the protection system and making the settings.

With reference to Figure 124, the equation for the bus voltage V_A at A side is:

$$\overline{V}_A = \overline{I}_A \cdot p \cdot Z_L + (\overline{I}_A + \overline{I}_B) \cdot R_f$$

(Equation 315)

If we divide V_A by I_A we get Z present to the IED at A side.

$$\overline{Z}_A = \frac{\overline{V}_a}{\overline{I}_A} = p \cdot \overline{Z}_L + \frac{\overline{I}_A + \overline{I}_B}{\overline{I}_A} \cdot R_f$$

(Equation 316)

The infeed factor $(I_A+I_B)/I_A$ can be very high, 10-20 depending on the differences in source impedances at local and remote end.

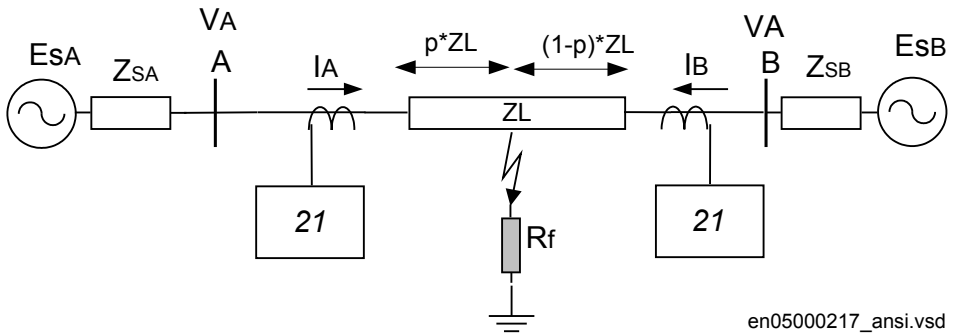

Figure 187: Influence of fault current infeed from remote line end

The effect of fault current infeed from remote line end is one of the most driving factors for justify complementary protection to distance protection.

When the line is heavily loaded, the distance protection at the exporting end will have a tendency to overreach. To handle this phenomenon, the IED has an adaptive built-in algorithm, which compensates the overreach tendency of zone 1, at the exporting end. No settings are required for this feature.

7.12.2.3 Load encroachment

In some cases the measured load impedance might enter the set zone characteristic without any fault on the protected line. The phenomenon is called load encroachment and it might occur when an external fault is cleared and high emergency load is transferred on the protected line. The effect of load encroachment is illustrated to the left in Figure 188. The entrance of the load impedance inside the characteristic is of course not desirable and the way to handle this with conventional distance protection is to consider this with the resistive reach settings, that is, to have a security margin between the distance zone characteristic and the minimum load impedance. Such a solution has the drawback that it will reduce the sensitivity of the distance protection, that is, the ability to detect resistive faults.

The IED has a built in feature which shapes the characteristic according to the characteristic shown in Figure 188. The load encroachment algorithm will increase the possibility to detect high fault resistances, especially for phase-to-ground faults at remote line end. For example, for a given setting of the load angle *LdAngle*, the resistive blinder for the zone measurement can be set according to Figure 188 affording higher fault resistance coverage without risk for unwanted operation due to load encroachment. Separate resistive blinder setting is available in forward and reverse direction.

The use of the load encroachment feature is essential for long heavily loaded lines, where there might be a conflict between the necessary emergency load transfer and necessary sensitivity of the distance protection. The function can also preferably be used on heavy loaded, medium long lines. For short lines, the major concern is to get sufficient fault resistance coverage. Load encroachment is not a major problem. See section "Load impedance limitation, without load encroachment function".

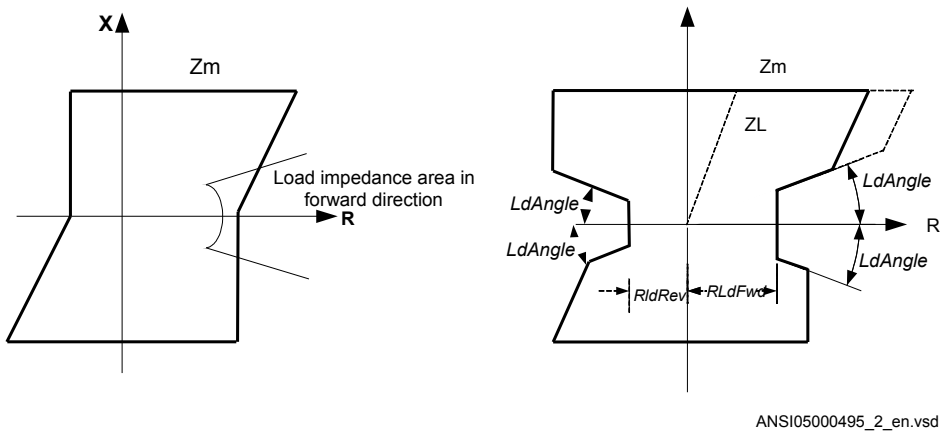

Figure 188: Load encroachment phenomena and shaped load encroachment characteristic

7.12.2.4 Short line application

Transmission line lengths for protection application purposes are classified as short, medium and long. The definition of short, medium and long lines is found in IEEE Std C37.113-1999.). The length classification is defined by the ratio of the source impedance at the protected line's terminal to the protected line's impedance (SIR). SIR's of about 4 or greater generally define a short line. Medium lines are those with SIR's greater than 0.5 and less than 4

In short line applications, the major concern is to get sufficient fault resistance coverage. Load encroachment is not so common problem. The line length that can be

recognized as a short line is not a fixed length; it depends on system parameters such as voltage and source impedance, see Table 17.

Table 26: Definition of short and very short line

Line category	Vn 110 kV	Vn 500 kV
Very short line	0.75 -3.5mile	3-15 miles
Short line	4-7 miles	15-30 miles

The IED's ability to set resistive and reactive reach independent for positive and zero sequence fault loops and individual fault resistance settings for phase-to-phase and phase-to-ground fault together with load encroachment algorithm improves the possibility to detect high resistive faults without conflict with the load impedance, see Figure 188.

For very short line applications, the underreaching zone 1 can not be used due to the voltage drop distribution throughout the line will be too low causing risk for overreaching. It is difficult, if not impossible, to apply distance protection for short lines. It is possible to apply an overreaching pilot communication based POTT or Blocking scheme protection for such lines to have fast tripping along the entire line. Usually a unit protection, based on comparison of currents at the ends of the lines is applied for such lines.

7.12.2.5 Long transmission line application

For long transmission lines, the margin to the load impedance, that is, to avoid load encroachment, will normally be a major concern. It is well known that it is difficult to achieve high sensitivity for phase-to-ground fault at remote line end of long lines when the line is heavy loaded.

What can be recognized as long lines with respect to the performance of distance protection can generally be described as in Table 18. Long lines have Source impedance ratio (SIR’s) less than 0.5.

Table 27: Definition of long and very long lines

Line category	Vn 110 kV	Vn 500 kV
Long lines	45-60 miles	200-250 miles
Very long lines	>60 miles	>250 miles

The IED's ability to set resistive and reactive reach independent for positive and zero sequence fault loops and individual fault resistance settings for phase-to-phase and phase-to-ground fault together with load encroachment algorithm improves the possibility to

detect high resistive faults at the same time as the security is improved (risk for unwanted trip due to load encroachment is eliminated), see Figure 188.

7.12.2.6 Parallel line application with mutual coupling

General

Introduction of parallel lines in the network is increasing due to difficulties to get necessary land to build new lines.

Parallel lines introduce an error in the measurement due to the mutual coupling between the parallel lines. The lines need not be of the same voltage level in order to experience mutual coupling, and some coupling exists even for lines that are separated by 100 meters or more. The mutual coupling does influence the zero sequence impedance to the fault point but it does not normally cause voltage inversion.

It can be shown from analytical calculations of line impedances that the mutual impedances for positive and negative sequence are very small (< 1-2%) of the self impedance and it is a common practice to neglect them.

From an application point of view there exists three types of network configurations (classes) that must be considered when making the settings for the protection function.

The different network configuration classes are:

1. Parallel line with common positive and zero sequence network
2. Parallel circuits with common positive but isolated zero sequence network
3. Parallel circuits with positive and zero sequence sources isolated.

One example of class 3 networks could be the mutual coupling between a 400 kV line and rail road overhead lines. This type of mutual coupling is not so common although it exists and is not treated any further in this manual.

For each type of network class, there are three different topologies; the parallel line can be in service, out of service, out of service and grounded in both ends.

The reach of the distance protection zone 1 shall be different depending on the operation condition of the parallel line. This can be handled by the use of different setting groups for handling the cases when the parallel line is in operation and out of service and grounded at both ends.

The distance protection within the IED can compensate for the influence of a zero sequence mutual coupling on the measurement at single phase-to-ground faults in the following ways, by using:

- The possibility of different setting values that influence the ground-return compensation for different distance zones within the same group of setting parameters.
- Different groups of setting parameters for different operating conditions of a protected multi circuit line.

Most multi circuit lines have two parallel operating circuits.

Parallel line applications

This type of networks is defined as those networks where the parallel transmission lines terminate at common nodes at both ends.

The three most common operation modes are:

1. Parallel line in service.
2. Parallel line out of service and grounded.
3. Parallel line out of service and not grounded.

Parallel line in service

This type of application is very common and applies to all normal sub-transmission and transmission networks.

Let us analyze what happens when a fault occurs on the parallel line see figure 127.

From symmetrical components, we can derive the impedance Z at the relay point for normal lines without mutual coupling according to equation 130.

$$\bar{Z} = \frac{\bar{V}_{ph}}{\bar{I}_{ph} + 3\bar{I}_0 \cdot \frac{\bar{Z}_0 - \bar{Z}_1}{3 \cdot \bar{Z}_1}} = \frac{\bar{V}_{ph}}{\bar{I}_{ph} + 3\bar{I}_0 \cdot \bar{K}_N}$$

(Equation 317)

Where:

Vph	is phase to ground voltage at the relay point
Iph	is phase current in the faulty phase
3I0	is ground fault current
Z1	is positive sequence impedance
Z0	is zero sequence impedance

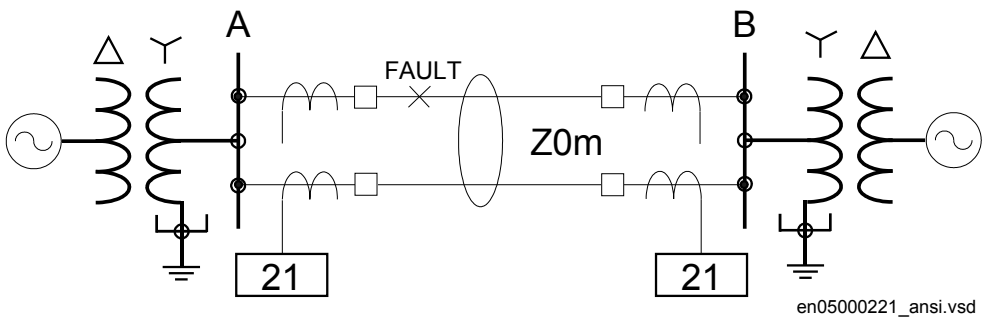

Figure 189: Class 1, parallel line in service

The equivalent circuit of the lines can be simplified, see figure 128.

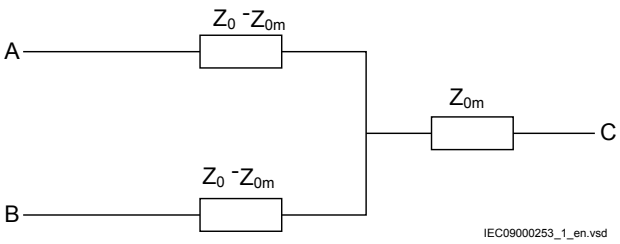

Figure 190: Equivalent zero sequence impedance circuit of the double-circuit, parallel, operating line with a single phase-to-ground fault at the remote busbar

When mutual coupling is introduced, the voltage at the relay point A will be changed according to equation 131.

$$V_{ph} = \overline{Z}1_L \cdot \left(\overline{I}_{ph} + 3\overline{I}_0 \cdot \frac{\overline{Z}0_L - \overline{Z}1_L}{3 \cdot \overline{Z}1_L} + 3\overline{I}_{0p} \frac{\overline{Z}0_m}{3 \cdot \overline{Z}1_L} \right)$$

(Equation 318)

By dividing equation 131 by equation 130 and after some simplification we can write the impedance present to the relay at A side as:

$$Z = \overline{Z1_L} \left(1 + \frac{3\overline{I}0 \cdot \overline{K}Nm}{\overline{I}ph + 3\overline{I}0 \cdot \overline{K}N} \right)$$

(Equation 319)

Where:

KNm = Z0m/(3 · Z1L)

The second part in the parentheses is the error introduced to the measurement of the line impedance.

If the current on the parallel line has negative sign compared to the current on the protected line, that is, the current on the parallel line has an opposite direction compared to the current on the protected line, the distance function will overreach. If the currents have the same direction, the distance protection will underreach.

Maximum overreach will occur if the fault current infeed from remote line end is weak. If considering a single phase-to-ground fault at 'p' unit of the line length from A to B on the parallel line for the case when the fault current infeed from remote line end is zero, the voltage V_A in the faulty phase at A side as in equation 133.

$$\overline{V_A} = \mathrm{p} \cdot \overline{Z1_L} \left(\overline{I_{ph}} + \overline{K_N} \cdot 3\overline{I_0} + \overline{K_{Nm}} \cdot 3\overline{I_{0p}} \right)$$

(Equation 320)

One can also notice that the following relationship exists between the zero sequence currents:

$$3\overline{I_0} \cdot \overline{Z0_L} = 3\overline{I0_p} \cdot \overline{Z0_L} \left(2 - p\right)$$

(Equation 321)

Simplification of equation 134, solving it for 3I0p and substitution of the result into equation 133 gives that the voltage can be drawn as:

$$\overline{V_A} = \mathrm{p} \cdot \overline{Z1_L} \left(\overline{I_{ph}} + \overline{K_N} \cdot 3\overline{I_0} + \overline{K_{Nm}} \cdot \frac{3\overline{I_0} \cdot \mathrm{p}}{2 - \mathrm{p}} \right)$$

(Equation 322)

If we finally divide equation 135 with equation 130 we can draw the impedance present to the IED as

$$\overline{Z} = p \cdot \overline{ZI_L} \left(\frac{\overline{I_{ph}} + \overline{KN} \cdot 3\overline{I_0} + \overline{KN_m} \cdot \frac{3\overline{I_0} \cdot p}{2 - p}}{I_{ph} + 3\overline{I_0} \cdot \overline{KN}} \right)$$

(Equation 323)

Calculation for a 400 kV line, where we for simplicity have excluded the resistance, gives with X1L=0.48 Ohm/Mile, X0L=1.4Ohms/Mile, zone 1 reach is set to 90% of the line reactance p=71% that is, the protection is underreaching with approximately 20%.

The zero sequence mutual coupling can reduce the reach of distance protection on the protected circuit when the parallel line is in normal operation. The reduction of the reach is most pronounced with no current infeed in the IED closest to the fault. This reach reduction is normally less than 15%. But when the reach is reduced at one line end, it is proportionally increased at the opposite line end. So this 15% reach reduction does not significantly affect the operation of a permissive underreaching scheme.

Parallel line out of service and grounded

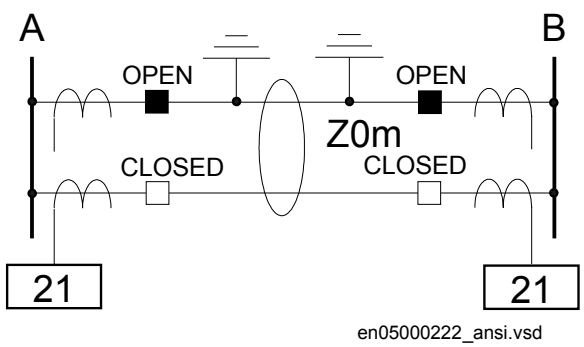

Figure 191: The parallel line is out of service and grounded

When the parallel line is out of service and grounded at both line ends on the bus bar side of the line CTs so that zero sequence current can flow on the parallel line, the equivalent zero sequence circuit of the parallel lines will be according to figure 130.

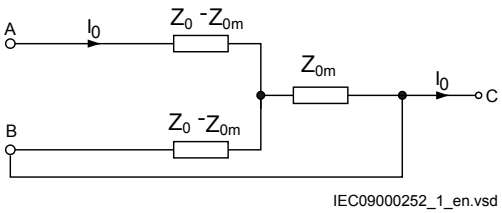

Figure 192: Equivalent zero sequence impedance circuit for the double-circuit line that operates with one circuit disconnected and grounded at both ends

Here the equivalent zero-sequence impedance is equal to Z_0-Z_0m in parallel with (Z_0-Z_{0m})/Z_0-Z_{0m}+Z_{0m} which is equal to equation 137.

$$\overline{Z}_E = \frac{\overline{Z}_0^2 - \overline{Z}_{om}^2}{\overline{Z}_0}$$

(Equation 324)

The influence on the distance measurement will be a considerable overreach, which must be considered when calculating the settings. It is recommended to use a separate setting group for this operation condition since it will reduce the reach considerably when the line is in operation.

All expressions below are proposed for practical use. They assume the value of zero sequence, mutual resistance R_{0m} equals to zero. They consider only the zero sequence, mutual reactance X_{0m}. Calculate the equivalent X_{0E} and R_{0E} zero sequence parameters according to equation 138 and equation 139 for each particular line section and use them for calculating the reach for the underreaching zone.

$$R_{0E} = R_0 \cdot \left(1 + \frac{X_{0m}^2}{R_0^2 + X_0^2} \right)$$

(Equation 325)

$$X_{0E} = X_0 \cdot \left(1 - \frac{X_{0m}^2}{R_0^2 + X_0^2} \right)$$

(Equation 326)

Parallel line out of service and not grounded

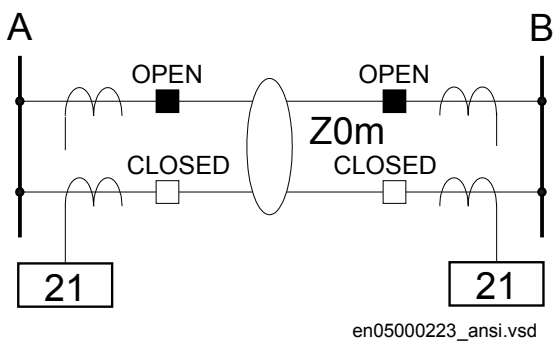

Figure 193: Parallel line is out of service and not grounded

When the parallel line is out of service and not grounded, the zero sequence on that line can only flow through the line admittance to the ground. The line admittance is high which limits the zero-sequence current on the parallel line to very low values. In practice, the equivalent zero-sequence impedance circuit for faults at the remote bus bar can be simplified to the circuit shown in figure 131

The line zero sequence mutual impedance does not influence the measurement of the distance protection in a faulty circuit. This means that the reach of the underreaching

distance protection zone is reduced if, due to operating conditions, the equivalent zero sequence impedance is set according to the conditions when the parallel system is out of operation and grounded at both ends.

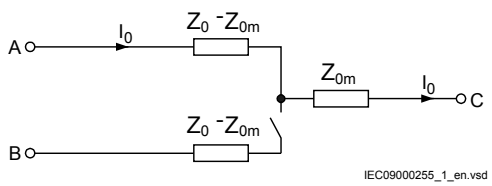

Figure 194: Equivalent zero-sequence impedance circuit for a double-circuit line with one circuit disconnected and not grounded

The reduction of the reach is equal to equation 140.

$$\overline{K}_U = \frac{\frac{1}{3}\cdot\left(2\cdot\overline{Z}_1 + \overline{Z}_{0E}\right) + R_f}{\frac{1}{3}\cdot\left(2\cdot\overline{Z}_1 + \overline{Z}_0\right) + R_f} = 1 - \frac{\overline{Z}_{m0}^{\,2}}{\overline{Z}_0\cdot\left(2\cdot\overline{Z}_1 + \overline{Z}_0 + 3R_f\right)}$$

(Equation 327)

This means that the reach is reduced in reactive and resistive directions. If the real and imaginary components of the constant A are equal to equation 141 and equation 142.

$$\mathrm{Re}(\overline{A}) = R0\cdot(2\cdot R1 + R0 + 3\cdot Rf) - X0\cdot(X0 + 2\cdot X1)$$

(Equation 328)

$$\mathrm{Im}(\overline{A}) = X_0\cdot(2\cdot R_1 + R_0 + 3\cdot R_1) + R_0\cdot(2\cdot X_1 + X_0)$$

(Equation 329)

The real component of the KU factor is equal to equation 143.

$$\mathrm{Re}\left(\overline{K}_u\right) = 1 + \frac{\mathrm{Re}\left(\overline{A}\right)\cdot X_{m0}^{\,2}}{\left[\mathrm{Re}\left(\overline{A}\right)\right]^2 + \left[\mathrm{Im}\left(\overline{A}\right)\right]^2}$$

(Equation 330)

The imaginary component of the same factor is equal to equation 144.

$$\mathrm{Im}\left(\overline{K}_U\right) = \frac{\mathrm{Im}\left(\overline{A}\right) \cdot X_{m0}^{\ 2}}{\left[\mathrm{Re}\left(\overline{A}\right)\right]^2 + \left[\mathrm{Im}\left(\overline{A}\right)\right]^2}$$

(Equation 331)

Ensure that the underreaching zones from both line ends will overlap a sufficient amount (at least 10%) in the middle of the protected circuit.

7.12.2.7 Tapped line application

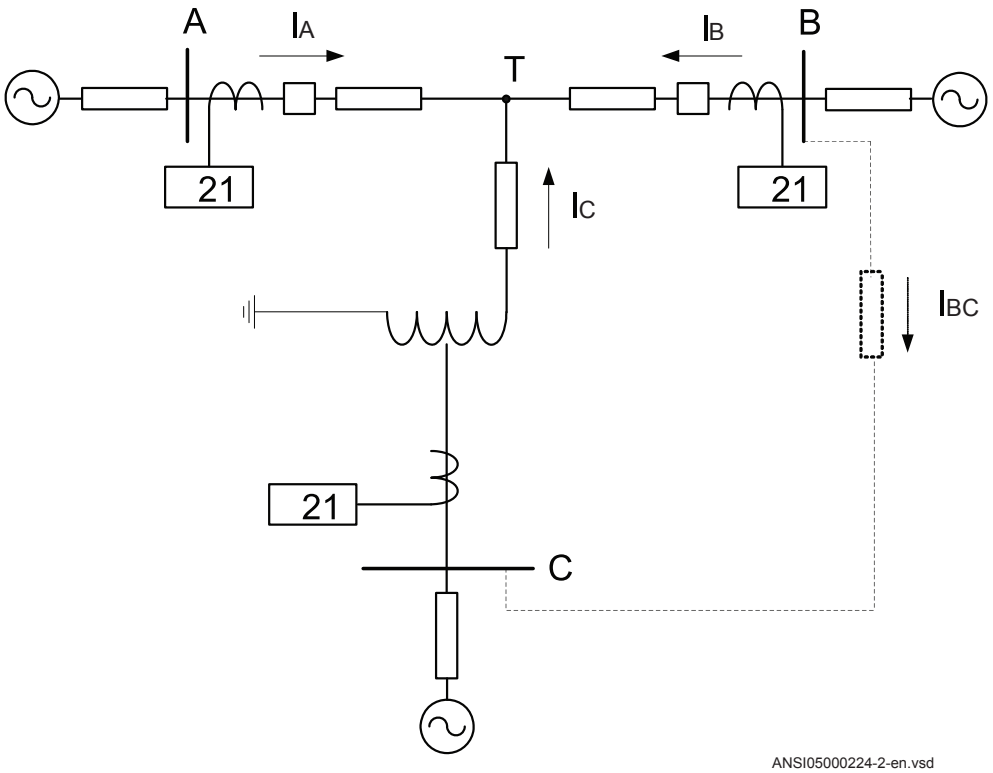

Figure 195: Example of tapped line with Auto transformer

This application gives rise to similar problem that was highlighted in section "Influence of fault current infeed from remote line end" , that is increased measured impedance due to fault current infeed. For example, for faults between the T point and B station the measured impedance at A and C will be

$$\bar{Z}_A = \bar{Z}_{AT} + \frac{\bar{I}_A + \bar{I}_C}{\bar{I}_A} \cdot \bar{Z}_{TF}$$

(Equation 332)

$$\bar{Z}_C = \bar{Z}_{Trf} + (\bar{Z}_{CT} + \frac{\dot{I}_A + \dot{I}_C}{\dot{I}_C} \cdot \bar{Z}_{TB}) \cdot (\frac{V2}{V1})^2$$

(Equation 333)

Where:

Z_{AT} and Z_{CT}	is the line impedance from the A respective C station to the T point.
I_A and I_C	is fault current from A respective C station for fault between T and B.
V2/V1	Transformation ratio for transformation of impedance at V1 side of the transformer to the measuring side V2 (it is assumed that current and voltage distance function is taken from V2 side of the transformer).
Z_{TF}	is the line impedance from the T point to the fault (F).
Z_{Trf}	Transformer impedance

For this example with a fault between T and B, the measured impedance from the T point to the fault will be increased by a factor defined as the sum of the currents from T point to the fault divided by the IED current. For the IED at C, the impedance on the high voltage side V1 has to be transferred to the measuring voltage level by the transformer ratio.

Another complication that might occur depending on the topology is that the current from one end can have a reverse direction for fault on the protected line. For example, for faults at T the current from B might go in reverse direction from B to C depending on the system parameters (see the dotted line in figure 133), given that the distance protection in B to T will measure wrong direction.

In three-end application, depending on the source impedance behind the IEDs, the impedances of the protected object and the fault location, it might be necessary to accept zone 2 trip in one end or sequential trip in one end.

Generally for this type of application it is difficult to select settings of zone 1 that both gives overlapping of the zones with enough sensitivity without interference with other zone 1 settings, that is, without selectivity conflicts. Careful fault calculations are necessary to determine suitable settings and selection of proper scheme communication.

Fault resistance

The performance of distance protection for single phase-to-ground faults is very important, because normally more than 70% of the faults on transmission lines are single phase-to-ground faults. At these faults, the fault resistance is composed of three parts: arc resistance, resistance of a tower construction, and tower-footing resistance.The resistance is also depending on the presence of ground shield conductor at the top of the tower, connecting tower-footing resistance in parallel. The arc resistance can be calculated according to Warrington's formula:

$$Rarc = \frac{28707 \cdot L}{I^{1.4}}$$

(Equation 334)

where:

L represents the length of the arc (in meters). This equation applies for the distance protection zone 1. Consider approximately three times arc foot spacing for the zone 2 and wind speed of approximately 30 m/h

I is the actual fault current in A.

In practice, the setting of fault resistance for both phase-to-ground *RFPG* and phase-to-phase *RFPP* should be as high as possible without interfering with the load impedance in order to obtain reliable fault detection.

7.12.3 Setting guidelines

7.12.3.1 General

The settings for Distance measuring zones, quadrilateral characteristic (ZMFPDIS) are done in primary values. The instrument transformer ratio that has been set for the analog input card is used to automatically convert the measured secondary input signals to primary values used in ZMFPDIS .

The following basics must be considered, depending on application, when doing the setting calculations:

- Errors introduced by current and voltage instrument transformers, particularly under transient conditions.
- Inaccuracies in the line zero-sequence impedance data, and their effect on the calculated value of the ground-return compensation factor.
- The effect of infeed between the IED and the fault location, including the influence of different Z_0/Z_1 ratios of the various sources.

- The phase impedance of non transposed lines is not identical for all fault loops. The difference between the impedances for different phase-to-ground loops can be as large as 5-10% of the total line impedance.
- The effect of a load transfer between the IEDs of the protected fault resistance is considerable, the effect must be recognized.
- Zero-sequence mutual coupling from parallel lines.

7.12.3.2 Setting of zone 1

The different errors mentioned earlier usually require a limitation of the underreaching zone (normally zone 1) to 75 - 90% of the protected line.

In case of parallel lines, consider the influence of the mutual coupling according to section "Parallel line application with mutual coupling" and select the case(s) that are valid in the particular application. By proper setting it is possible to compensate for the cases when the parallel line is in operation, out of service and not grounded and out of service and grounded in both ends. The setting of ground-fault reach should be selected to be <95% also when parallel line is out of service and grounded at both ends (worst case).

7.12.3.3 Setting of overreaching zone

The first overreaching zone (normally zone 2) must detect faults on the whole protected line. Considering the different errors that might influence the measurement in the same way as for zone 1, it is necessary to increase the reach of the overreaching zone to at least 120% of the protected line. The zone 2 reach can be even higher if the fault infeed from adjacent lines at remote end is considerable higher than the fault current at the IED location.

The setting shall generally not exceed 80% of the following impedances:

- The impedance corresponding to the protected line, plus the first zone reach of the shortest adjacent line.
- The impedance corresponding to the protected line, plus the impedance of the maximum number of transformers operating in parallel on the bus at the remote end of the protected line.

Larger overreach than the mentioned 80% can often be acceptable due to fault current infeed from other lines. This requires however analysis by means of fault calculations.

If any of the above gives a zone 2 reach less than 120%, the time delay of zone 2 must be increased by approximately 200ms to avoid unwanted operation in cases when the telecommunication for the short adjacent line at remote end is down during faults. The

zone 2 must not be reduced below 120% of the protected line section. The whole line must be covered under all conditions.

The requirement that the zone 2 shall not reach more than 80% of the shortest adjacent line at remote end is highlighted in the example below.

If a fault occurs at point F see figure 134, the IED at point A senses the impedance:

$$\overline{Z}_{AF} = \frac{\overline{V}_A}{\overline{I}_A} = \overline{Z}_{AC} + \frac{\overline{I}_A + \overline{I}_C}{\overline{I}_A} \cdot \overline{Z}_{CF} + \frac{\overline{I}_A + \overline{I}_C + \overline{I}_B}{\overline{I}_A} \cdot R_F = \overline{Z}_{AC} + \left(1 + \frac{\overline{I}_C}{\overline{I}_A}\right) \cdot \overline{Z}_{CF} + \left(1 + \frac{\overline{I}_C + \overline{I}_B}{\overline{I}_A}\right) \cdot R_F$$

(Equation 335)

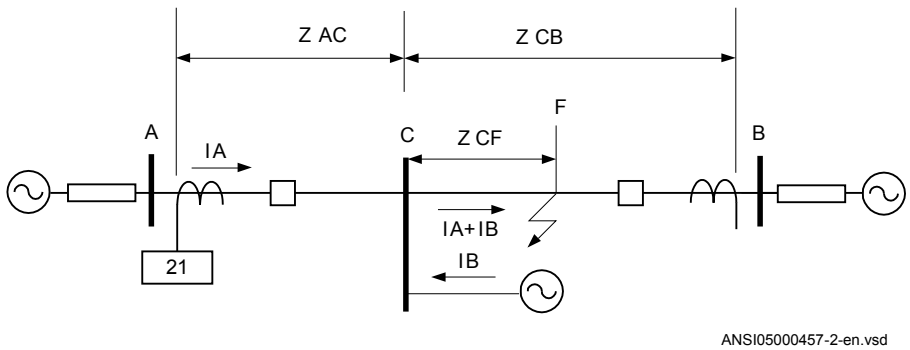

Figure 196: Setting of overreaching zone

7.12.3.4 Setting of reverse zone

The reverse zone is applicable for purposes of scheme communication logic, current reversal logic, weak-end infeed logic, and so on. The same applies to the back-up protection of the bus bar or power transformers. It is necessary to secure, that it always covers the overreaching zone, used at the remote line IED for the telecommunication purposes.

Consider the possible enlarging factor that might exist due to fault infeed from adjacent lines. Equation 149 can be used to calculate the reach in reverse direction when the zone is used for blocking scheme, weak-end infeed, and so on.

$$Zrev \geq 1.2 \cdot \left(ZL - Z2rem\right)$$

(Equation 336)

Where:

ZL is the protected line impedance

Z2rem is zone 2 setting at remote end of protected line.

In many applications it might be necessary to consider the enlarging factor due to fault current infeed from adjacent lines in the reverse direction in order to obtain certain sensitivity.

7.12.3.5 Setting of zones for parallel line application

Parallel line in service – Setting of zone 1

With reference to section "Parallel line applications", the zone reach can be set to 85% of the protected line.

However, influence of mutual impedance has to be taken into account.

Parallel line in service – setting of zone 2

Overreaching zones (in general, zones 2 and 3) must overreach the protected circuit in all cases. The greatest reduction of a reach occurs in cases when both parallel circuits are in service with a single phase-to-ground fault located at the end of a protected line. The equivalent zero sequence impedance circuit for this case is equal to the one in figure 128 in section Parallel line in service .

The components of the zero sequence impedance for the overreaching zones must be equal to at least:

$$R_{0E} = R_0 + R_{m0}$$

(Equation 337)

$$X_{0E} = X_0 + X_{m0}$$

(Equation 338)

Check the reduction of a reach for the overreaching zones due to the effect of the zero sequence mutual coupling. The reach is reduced for a factor:

$$K0 = 1 - \frac{Z0_m}{2 \cdot Z1 + Z0 + R_f}$$

(Equation 339)

If the denominator in equation 152 is called B and Z0m is simplified to X0m, then the real and imaginary part of the reach reduction factor for the overreaching zones can be written as:

$$\mathrm{Re}\left(\overline{K}0\right) = 1 - \frac{X0m \cdot \mathrm{Re}\left(B\right)}{\mathrm{Re}\left(B\right)^2 + \mathrm{Im}\left(B\right)^2}$$

(Equation 340)

$$\mathrm{Im}\left(\overline{K}0\right) = \frac{X0m \cdot \mathrm{Im}\left(B\right)}{\mathrm{Re}\left(B\right)^2 + \mathrm{Im}\left(B\right)^2}$$

(Equation 341)

Parallel line is out of service and grounded in both ends

Apply the same measures as in the case with a single set of setting parameters. This means that an underreaching zone must not overreach the end of a protected circuit for the single phase-to-ground faults.

Set the values of the corresponding zone (zero-sequence resistance and reactance) equal to:

$$R_{0E} = R_0 \cdot \left(1 + \frac{X_{m0}^2}{R_0^2 + X_0^2}\right)$$

(Equation 342)

$$X_{0E} = X_0 \cdot \left(1 - \frac{X_{m0}^2}{R_0^2 + X_0^2}\right)$$

(Equation 343)

7.12.3.6 Setting the reach with respect to load

Set separately the expected fault resistance for phase-to-phase faults *RFPP* and for the phase-to-ground faults *RFPG* for each zone. For each distance zone, set all remaining reach setting parameters independently of each other.

The final reach in the resistive direction for phase-to-ground fault loop measurement automatically follows the values of the line-positive and zero-sequence resistance, and at the end of the protected zone is equal to equation 157.

$$\mathrm{R} = \frac{1}{3}\left(2 \cdot \mathrm{R1} + \mathrm{R0}\right) + \mathrm{RFPG}$$

(Equation 344)

$$\varphi loop = \arctan\left[\frac{2 \cdot \mathrm{X1} + \mathrm{X0}}{2 \cdot \mathrm{R1} + \mathrm{R0}}\right]$$

(Equation 345)

Setting of the resistive reach for the underreaching zone 1 should follow the condition to minimize the risk for overreaching:

$$RFPG \leq 4.5 \cdot X1$$

(Equation 346)

The fault resistance for phase-to-phase faults is normally quite low compared to the fault resistance for phase-to-ground faults. To minimize the risk for overreaching, limit the setting of the zone1 reach in the resistive direction for phase-to-phase loop measurement based on the equation.

$$RFPP \leq 6 \cdot X1$$

(Equation 347)

The setting *XLd* is primarily there to define the border between what is considered a fault and what is just normal operation. See Figure In this context, the main examples of normal operation are reactive load from reactive power compensation equipment or the capacitive charging of a long high-voltage power line. *XLd* needs to be set with some margin towards normal apparent reactance; not more than 90% of the said reactance or just as much as is needed from a zone reach point of view.

As with the settings *RLdFwd* and *RldRev*, *XLd* is representing a per-phase load impedance of a symmetrical star-coupled representation. For a symmetrical load or three-phase and phase-to-phase faults, this means per-phase, or positive-sequence, impedance. During a phase-to-earth fault, it means the per-loop impedance, including the earth return impedance.

7.12.3.7 Zone reach setting lower than minimum load impedance

Even if the resistive reach of all protection zones is set lower than the lowest expected load impedance and there is no risk for load encroachment, it is still necessary to set *RLdFwd*, *RldRev* and *LdAngle* according to the expected load situation, since these settings are used internally in the function as reference points to improve the performance of the phase selection.

The maximum permissible resistive reach for any zone must be checked to ensure that there is a sufficient setting margin between the boundary and the minimum load impedance. The minimum load impedance (Ω/phase) is calculated with the equation.

$$Z_{load\,min} = \frac{V^2}{S}$$

(Equation 348)

Where:

V the minimum phase-to-phase voltage in kV

S the maximum apparent power in MVA.

The load impedance [Ω/phase] is a function of the minimum operation voltage and the maximum load current:

$$Z_{load} = \frac{V_{min}}{\sqrt{3} \cdot I_{max}}$$

(Equation 349)

Minimum voltage V_{min} and maximum current I_{max} are related to the same operating conditions. Minimum load impedance occurs normally under emergency conditions.

As a safety margin, it is required to avoid load encroachment under three-phase conditions. To guarantee correct healthy phase IED operation under combined heavy three-phase load and ground faults both phase-to-phase and phase-to-ground fault operating characteristics should be considered.

To avoid load encroachment for the phase-to-ground measuring elements, the set resistive reach of any distance protection zone must be less than 80% of the minimum load impedance.

$$RFPG \leq 0.8 \cdot Z_{load}$$

(Equation 350)

This equation is applicable only when the loop characteristic angle for the single phase-to-ground faults is more than three times as large as the maximum expected load-impedance angle. For the case when the loop characteristic angle is less than three times the load-impedance angle, more accurate calculations are necessary according to equation 164.

$$RFPG \le 0.8 \cdot Z_{load\,\min} \cdot \left[\cos\partial - \frac{2 \cdot R1 + R0}{2 \cdot X1 + X0} \cdot \sin\partial \right]$$

(Equation 351)

Where:

∂ is a maximum load-impedance angle, related to the maximum load power.

To avoid load encroachment for the phase-to-phase measuring elements, the set resistive reach of any distance protection zone must be less than 160% of the minimum load impedance.

$$RFPP \le 1.6 \cdot Z_{load}$$

(Equation 352)

Equation 165 is applicable only when the loop characteristic angle for the phase-to-phase faults is more than three times as large as the maximum expected load-impedance angle. For other cases a more accurate calculations are necessary according to equation 166.

$$RFPP \le 1.6 \cdot Z_{load\,\min} \cdot \left[\cos\vartheta - \frac{R1}{X1} \cdot \sin\vartheta \right]$$

(Equation 353)

All this is applicable for all measuring zones when no Power swing detection function ZMRPSB (78) is activated in the IED. Use an additional safety margin of approximately 20% in cases when a ZMRPSB (78) function is activated in the IED, refer to the description of Power swing detection function ZMRPSB (78).

7.12.3.8 Zone reach setting higher than minimum load impedance

The impedance zones are enabled as soon as the (symmetrical) load impedance crosses the vertical boundaries defined by *RLdFwd* and *RldRev* or the lines defined by *ArgLd*. So, it is necessary to consider some margin. It is recommended to set *RLdFwd* and *RldRev* to 90% of the per-phase resistance that corresponds to maximum load.

The absolute value of the margin to the closest *LdAngle* line should be of the same order, that is, at least 0.1 • $Z_{load\ min}$.

The load encroachment settings are related to a per-phase load impedance in a symmetrical star-coupled representation. For symmetrical load or three-phase and phase-to-phase faults, this corresponds to the per-phase, or positive-sequence, impedance. For a phase-to-ground fault, it corresponds to the per-loop impedance, including the ground return impedance.

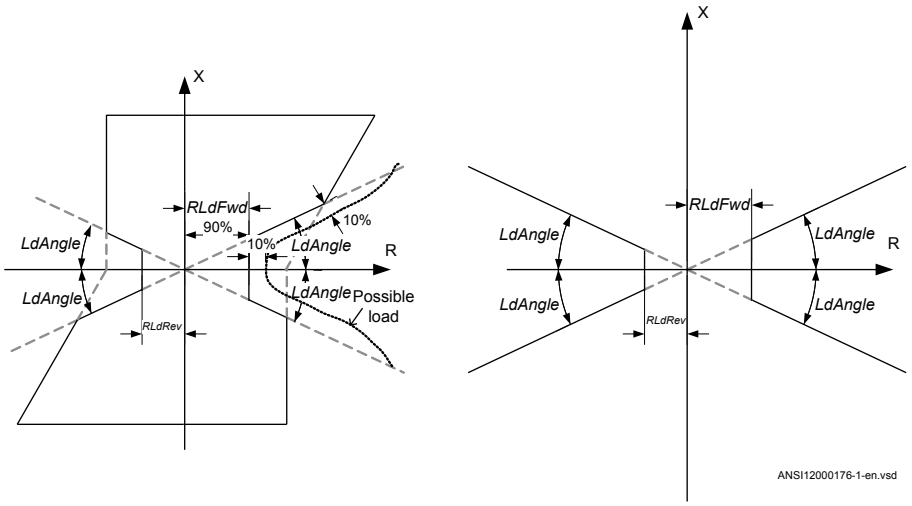

Figure 197: Load impedance limitation with load encroachment

During the initial current change for phase-to-phase and for phase-to-ground faults, operation may be allowed also when the apparent impedance of the load encroachment element is located in the load area. This improves the dependability for fault at the remote end of the line during high load. Although it is not associated to any standard event, there is one potentially hazardous situation that should be considered. Should one phase of a parallel circuit open a single pole, even though there is no fault, and the load current of that phase increase, there is actually no way of distinguish this from a real fault with similar characteristics. Should this accidental event be given precaution, the phase-to-ground reach (RFPG) of all instantaneous zones has to be set below the emergency load for the pole-open situation. Again, this is only for the application where there is a risk that one breaker pole would open without a preceding fault. If this never happens, for example when there is no parallel circuit, there is no need to change any phase-to-ground reach according to the pole-open scenario.

7.12.3.9 Other settings

IMinOpPG and *IMinOpPP*

The ability for a specific loop and zone to issue a start or a trip is inhibited if the magnitude of the input current for this loop falls below the threshold value defined by these settings. The output of a phase-to-ground loop n is blocked if In < *IminOpPG*(Zx). In is the RMS value of the fundamental current in phase n.

The output of a phase-to-phase loop mn is blocked if Imn < *IMinOpPP*(Zx). Imn is the RMS value of the vector difference between phase currents m and Ln.

Both current limits *IMinOpPG* and *IMinOpPP* are automatically reduced to 75% of regular set values if the zone is set to operate in reverse direction, that is, *OperationDir* is set to *Reverse*.

OpModeZx

This setting allows control over the operation/non-operation of the individual distance zones. Normally the option *Enable Ph-G PhPh* is active to allow the operation of both phase-to-phase and phase-to-ground loops. Operation in either phase-to-phase or phase-to-ground loops can be chosen by activating *Enable PhPh* or *Enable Ph-G*, respectively. The zone can be completely disabled with the setting option *Disable-Zone*.

DirModeZx

This setting defines the operating direction for zones Z3, Z4 and Z5 (the directionality of zones Z1, Z2 and ZRV is fixed). The options are *Non-directional*, *Forward* or *Reverse*. The result from respective set value is illustrated in Figure 198, where the positive impedance corresponds to the direction out on the protected line.

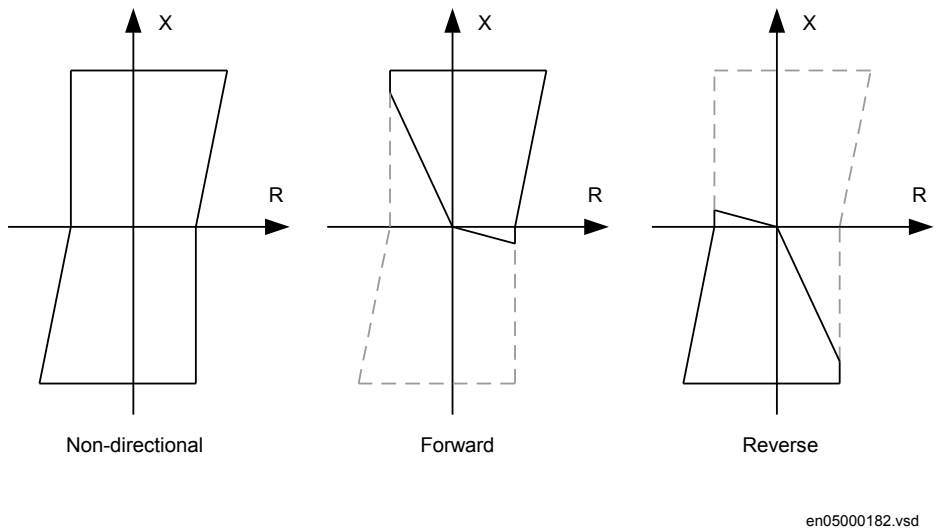

Figure 198: Directional operating modes of the distance measuring zones 3 to 5

tPPZx, *tPGZx*, *TimerModeZx*, *ZoneLinkPU* and *TimerLinksZx*

The logic for the linking of the timer settings can be described with a module diagram. The following figure shows only the case when *TimerModeZx* is selected to *Ph-Ph* and *Ph-G*.

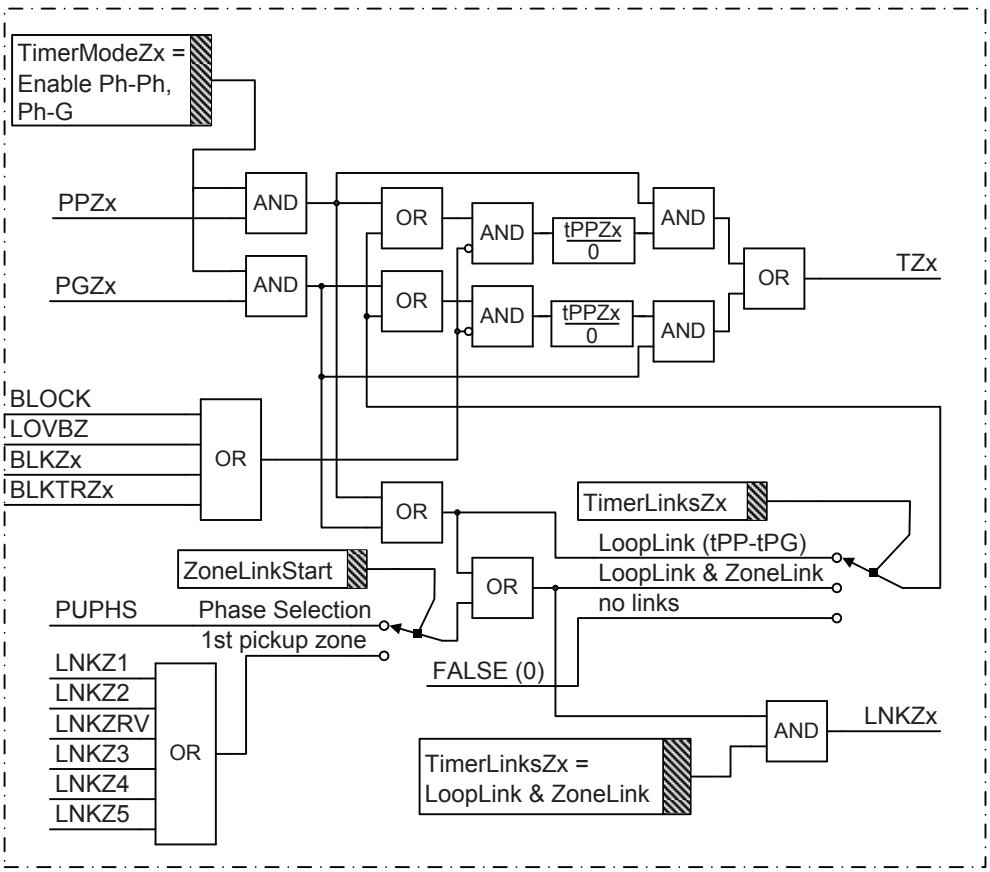

Figure 199: Logic for linking of timers

CVTtype

If possible, the type of capacitive voltage transformer (CVT) used for measurement should be identified. The alternatives are strongly related to the type of ferro-resonance suppression circuit included in the CVT. There are two main choices:

Passive type For CVTs that use a nonlinear component, like a saturable inductor, to limit overvoltages (caused by ferro-resonance). This component is practically idle during normal load and fault conditions, hence the name "passive." CVTs that have a high resistive burden to mitigate ferro-resonance also fall into this category.

Any	This option is primarily related to the so-called active type CVT, which uses a set of reactive components to form a filter circuit that essentially attenuates frequencies other than the nominal to restrain the ferro-resonance. The name "active" refers to this circuit always being involved during transient conditions, regardless of the voltage level. This option should also be used for the types that do not fall under the other two categories, for example, CVTs with power electronic damping devices, or if the type cannot be identified at all.
None (Magnetic)	This option should be selected if the voltage transformer is fully magnetic.

3I0Enable_PG

This setting opens up an opportunity to enable phase-to-ground measurement for phase-to-phase-ground faults. It determines the level of residual current (3I0) above which phase-to-ground measurement is activated (and phase-to-phase measurement is blocked). The relations are defined by the following equation.

$$\left|3 \cdot I_0\right| \geq \frac{I3I0Enable\_PG}{100} \cdot I_{ph\,max}$$

(Equation 354)

Where:

3I0Enable_PG	the setting for the minimum residual current needed to enable operation in the phase-to-ground fault loops in %
I_{phmax}	the maximum phase current in any of the three phases

By default, this setting is set excessively high to always enable phase-to-phase measurement for phase-to-phase-ground faults. This default setting value must be maintained unless there are very specific reasons to enable phase-to-ground measurement. Even with the default setting value, phase-to-ground measurement is activated whenever appropriate, like in the case of simultaneous faults: two ground faults at the same time, one each on the two circuits of a double line.

7.13 High speed distance protection ZMFCPDIS (21)

7.13.1 Identification

Function description	IEC 61850 identification	IEC 60617 identification	ANSI/IEEE C37.2 device number
High speed distance protection zone (zone 1-6)	ZMFCPDIS	Z<	21

7.13.2 Application

Sub-transmission networks are being extended and often become more and more complex, consisting of a high number of multi-circuit and/or multi terminal lines of very different lengths. These changes in the network will normally impose more stringent demands on the fault clearing equipment in order to maintain an unchanged or increased security level of the power system.

The high speed distance protection function (ZMFCPDIS) in the IED is designed to provide sub-cycle, down to half-cycle, operate time for basic faults. At the same time, it is specifically designed for extra care during difficult conditions in high voltage transmission networks, like faults on long heavily loaded lines and faults generating heavily distorted signals. These faults are handled with outmost security and dependability, although sometimes with reduced operating speed.

7.13.2.1 System grounding

The type of system grounding plays an important role when designing the protection system. Some hints with respect to distance protection are highlighted below.

Solidly grounded networks

In solidly grounded systems, the transformer neutrals are connected directly to ground without any impedance between the transformer neutral and ground.

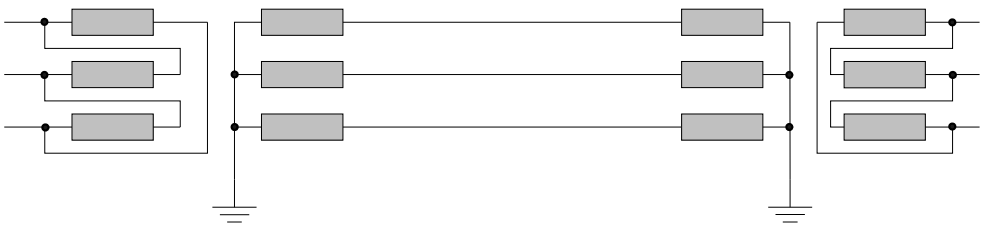

xx05000215_ansi.vsd

Figure 200: Solidly grounded network

The ground-fault current is as high or even higher than the short-circuit current. The series impedances determine the magnitude of the fault current. The shunt admittance has very limited influence on the ground-fault current. The shunt admittance may, however, have some marginal influence on the ground-fault current in networks with long transmission lines.

The ground-fault current at single phase-to-ground in phase A can be calculated as equation 122:

$$3I_0 = \frac{3 \cdot V_A}{Z_1 + Z_2 + Z_0 + 3Z_f} = \frac{V_A}{Z_1 + Z_N + Z_f}$$

(Equation 355)

Where:

VA	is the phase-to-ground voltage (kV) in the faulty phase before fault.
Z_1	is the positive sequence impedance (Ω/phase).
Z_2	is the negative sequence impedance (Ω/phase).
Z_0	is the zero sequence impedance (Ω/phase).
Z_f	is the fault impedance (Ω), often resistive.
Z_N	is the ground-return impedance defined as $(Z_0-Z_1)/3$.

The voltage on the healthy phases is generally lower than 140% of the nominal phase-to-ground voltage. This corresponds to about 80% of the nominal phase-to-phase voltage.

The high zero-sequence current in solidly grounded networks makes it possible to use impedance measuring techniques to detect ground faults. However, distance protection has limited possibilities to detect high resistance faults and should therefore always be complemented with other protection function(s) that can carry out the fault clearance in those cases.

Effectively grounded networks

A network is defined as effectively grounded if the ground-fault factor f_e is less than 1.4. The ground-fault factor is defined according to equation 43:

$$f_e = \left| \frac{V_{max}}{V_{pn}} \right|$$

(Equation 356)

Where:

V_{max}	is the highest fundamental frequency voltage on one of the healthy phases at single phase-to-ground fault.
V_{pn}	is the phase-to-ground fundamental frequency voltage before fault.

Another definition for effectively grounded network is when the following relationships between the symmetrical components of the network impedances are valid, see equations 124 and 125:

$$X_0 < 3 \cdot X_1$$

(Equation 357)

$$R_0 \leq R_1$$

(Equation 358)

Where

R_0	is the resistive zero sequence of the source
X_0	is the reactive zero sequence of the source
R_1	is the resistive positive sequence of the source
X_1	is the reactive positive sequence of the source

The magnitude of the ground-fault current in effectively grounded networks is high enough for impedance measuring elements to detect ground faults. However, in the same way as for solidly grounded networks, distance protection has limited possibilities to detect high resistance faults and should therefore always be complemented with other protection function(s) that can carry out the fault clearance in this case.

High impedance grounded networks

In this type of network, it is mostly not possible to use distance protection for detection and clearance of ground faults. The low magnitude of the ground fault current might not give pickup of the zero-sequence measurement elements or the sensitivity will be too low for acceptance. For this reason a separate high sensitive ground fault protection is necessary to carry out the fault clearance for single phase-to-ground fault.

ZMFCPDIS is not designed for high impedance earthed networks. We recommend using the ZMQPDIS distance function instead, possibly together with the Phase preference logic (PPLPHIZ).

7.13.2.2 Fault infeed from remote end

All transmission and most sub-transmission networks are operated meshed. Typical for this type of network is that fault infeed from remote end will happen when fault occurs on the protected line. The fault current infeed will enlarge the fault impedance seen by the distance protection. This effect is very important to keep in mind when both planning the protection system and making the settings.

The equation for the bus voltage V_A at A side is:

$$\overline{V}_A = \overline{I}_A \cdot p \cdot Z_L + (\overline{I}_A + \overline{I}_B) \cdot R_f$$

(Equation 359)

If we divide V_A by I_A we get Z present to the IED at A side:

$$\overline{Z}_A = \frac{\overline{V}_a}{\overline{I}_A} = p \cdot \overline{Z}_L + \frac{\overline{I}_A + \overline{I}_B}{\overline{I}_A} \cdot R_f$$

(Equation 360)

The infeed factor $(I_A+I_B)/I_A$ can be very high, 10-20 depending on the differences in source impedances at local and remote end.

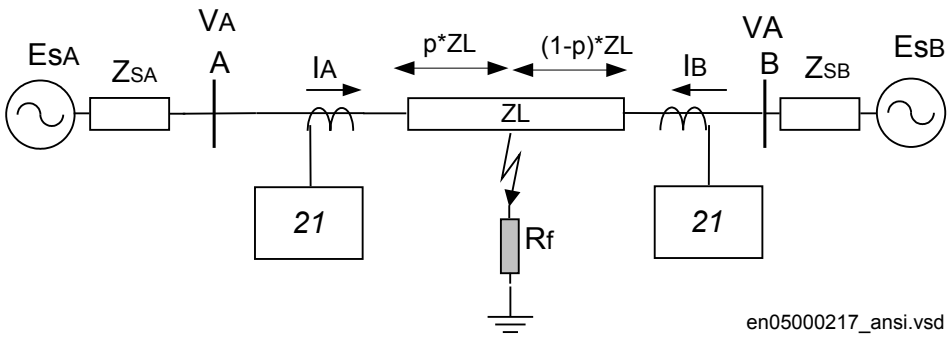

Figure 201: Influence of fault current infeed from remote line end

The effect of fault current infeed from remote line end is one of the most driving factors for justify complementary protection to distance protection.

When the line is heavily loaded, the distance protection at the exporting end will have a tendency to overreach. To handle this phenomenon, the IED has an adaptive built-in algorithm, which compensates the overreach tendency of zone 1 at the exporting end and reduces the underreach at the importing end. No settings are required for this function.

7.13.2.3 Load encroachment

In some cases the load impedance might enter the zone characteristic without any fault on the protected line. The phenomenon is called load encroachment and it might occur when an external fault is cleared and high emergency load is transferred on the protected line. The effect of load encroachment is illustrated in the left part of figure 202. The entrance of the load impedance inside the characteristic is not allowed and the previous way of handling this was to consider it with the settings, that is, with a security margin between the distance zone and the minimum load impedance. This has the drawback that it will reduce the sensitivity of the protection, that is, the ability to detect resistive faults.

The IED has a built-in function which shapes the characteristic according to the right part of figure 202. The load encroachment algorithm will increase the possibility to detect high fault resistances, especially for phase-to-ground faults at remote line end.For example, for a given setting of the load angle *LdAngle* the resistive blinder for the zone measurement can be expanded according to the right part of the figure 202, given higher fault resistance coverage without risk for unwanted operation due to load encroachment. This is valid in both directions.

The use of the load encroachment feature is essential for long heavily loaded lines, where there might be a conflict between the necessary emergency load transfer and necessary sensitivity of the distance protection. The function can also preferably be used on heavy loaded medium long lines. For short lines, the major concern is to get sufficient fault resistance coverage. Load encroachment is not a major problem. Nevertheless, always set *RLdFwd*, *RldRev* and *LdAngle*according to the expected maximum load since these settings are used internally in the function as reference points to improve the performance of the phase selection.

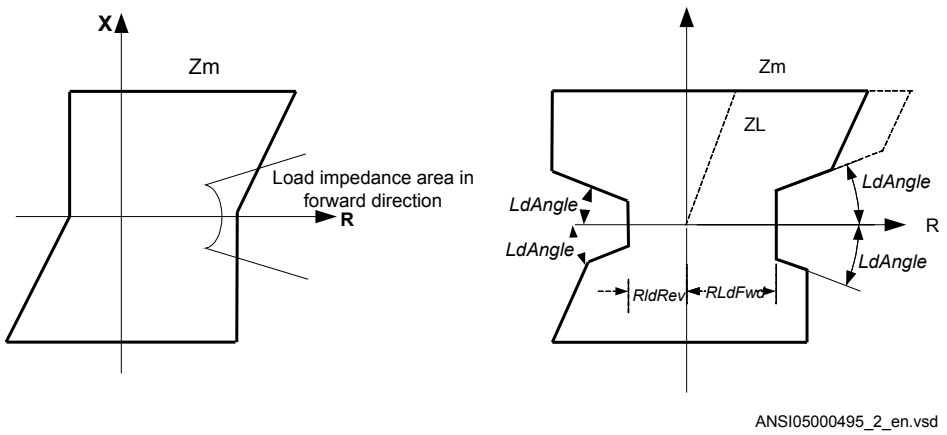

Figure 202: Load encroachment phenomena and shaped load encroachment characteristic

7.13.2.4 Short line application

Transmission line lengths for protection application purposes are classified as short, medium and long. The definition of short, medium and long lines is found in IEEE Std C37.113-1999. The length classification is defined by the ratio of the source impedance at the protected line's terminal to the protected line's impedance (SIR). SIR's of about 4 or greater generally define a short line. Medium lines are those with SIR's greater than 0.5 and less than 4.

In short line applications, the major concern is to get sufficient fault resistance coverage. Load encroachment is not so common. The line length that can be recognized as a short line is not a fixed length; it depends on system parameters such as voltage and source impedance, see table 17.

Table 28: Definition of short and very short line

Line category	Vn	Vn
	110 kV	500 kV
Very short line	0.75 -3.5 miles	3-15 miles
Short line	4-7 miles	15-30 miles

The IED's ability to set resistive and reactive reach independent for positive and zero sequence fault loops and individual fault resistance settings for phase-to-phase and phase-to-ground fault together with load encroachment algorithm improves the possibility to detect high resistive faults without conflict with the load impedance, see figure 7.

For very short line applications, the underreaching zone 1 cannot be used due to the voltage drop distribution throughout the line will be too low causing risk for overreaching. It is difficult, if not impossible, to apply distance protection for short lines. It is possible to apply an overreaching pilot communication based POTT or Blocking scheme protection for such lines to have fast tripping along the entire line. Usually a unit protection, based on comparison of currents at the ends of the lines is applied for such lines.

Load encroachment is normally no problem for short line applications.

7.13.2.5 Long transmission line application

For long transmission lines, the margin to the load impedance, that is, to avoid load encroachment, will normally be a major concern. It is well known that it is difficult to achieve high sensitivity for phase-to-ground fault at remote line end of long lines when the line is heavy loaded.

What can be recognized as long lines with respect to the performance of distance protection can generally be described as in table 18, long lines have Source impedance ratio (SIR's) less than 0.5.

Table 29: Definition of long and very long lines

Line category	Vn 110 kV	Vn 500 kV
Long lines	45-60 miles	200-250 miles
Very long lines	>60 miles	>250 miles

The IED's ability to set resistive and reactive reach independent for positive and zero sequence fault loops and individual fault resistance settings for phase-to-phase and phase-to-ground fault together with load encroachment algorithm improves the possibility to detect high resistive faults at the same time as the security is improved (risk for unwanted trip due to load encroachment is eliminated), see figure 126.

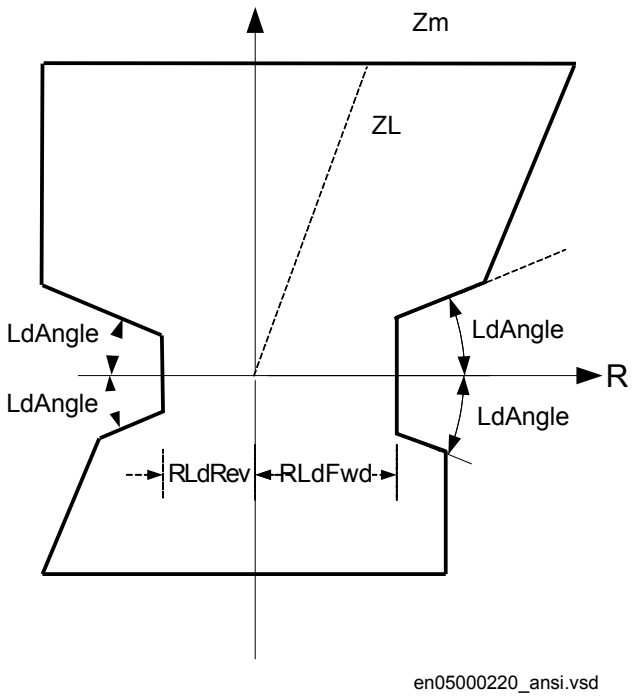

Figure 203: Characteristic for zone measurement for a long line

7.13.2.6 Parallel line application with mutual coupling

General

Introduction of parallel lines in the network is increasing due to difficulties to get necessary area for new lines.

Parallel lines introduce an error in the zero sequence measurement due to the mutual coupling between the parallel lines. The lines need not be of the same voltage in order to have mutual coupling, and some coupling exists even for lines that are separated by 100 meters or more. The mutual coupling does not normally cause voltage inversion.

It can be shown from analytical calculations of line impedances that the mutual impedances for positive and negative sequence are very small (< 1-2%) of the self impedance and it is a practice to neglect them.

From an application point of view there exists three types of network configurations (classes) that must be considered when making the settings for the protection function.

The different network configuration classes are:

1. Parallel line with common positive and zero sequence network
2. Parallel circuits with common positive but separated zero sequence network
3. Parallel circuits with positive and zero sequence sources separated.

One example of class 3 networks could be the mutual coupling between a 400 kV line and rail road overhead lines. This type of mutual coupling is not so common although it exists and is not treated any further in this manual.

For each type of network class, there are three different topologies; the parallel line can be in service, out of service, out of service and grounded in both ends.

The reach of the distance protection zone 1 will be different depending on the operation condition of the parallel line. This can be handled by the use of different setting groups for handling the cases when the parallel line is in operation and out of service and grounded at both ends.

The distance protection within the IED can compensate for the influence of a zero sequence mutual coupling on the measurement at single phase-to-ground faults in the following ways, by using:

- The possibility of different setting values that influence the ground-return compensation for different distance zones within the same group of setting parameters.
- Different groups of setting parameters for different operating conditions of a protected multi circuit line.

Most multi circuit lines have two parallel operating circuits.

Parallel line applications

This type of networks is defined as those networks where the parallel transmission lines terminate at common nodes at both ends.

The three most common operation modes are:

1. Parallel line in service.
2. Parallel line out of service and grounded.
3. Parallel line out of service and not grounded.

Parallel line in service

This type of application is very common and applies to all normal sub-transmission and transmission networks.

Let us analyze what happens when a fault occurs on the parallel line see figure 127.

From symmetrical components, we can derive the impedance Z at the relay point for normal lines without mutual coupling according to equation 130.

$$\bar{Z} = \frac{\bar{V}_{ph}}{\bar{I}_{ph} + 3\bar{I}_0 \cdot \frac{\bar{Z}_0 - \bar{Z}_1}{3 \cdot \bar{Z}_1}} = \frac{\bar{V}_{ph}}{\bar{I}_{ph} + 3\bar{I}_0 \cdot \bar{K}_N}$$

(Equation 361)

Where:

Vph	is phase to ground voltage at the relay point.
Iph	is phase current in the faulty phase.
3I0	is ground fault current.
Z1	is positive sequence impedance.
Z0	is zero sequence impedance.

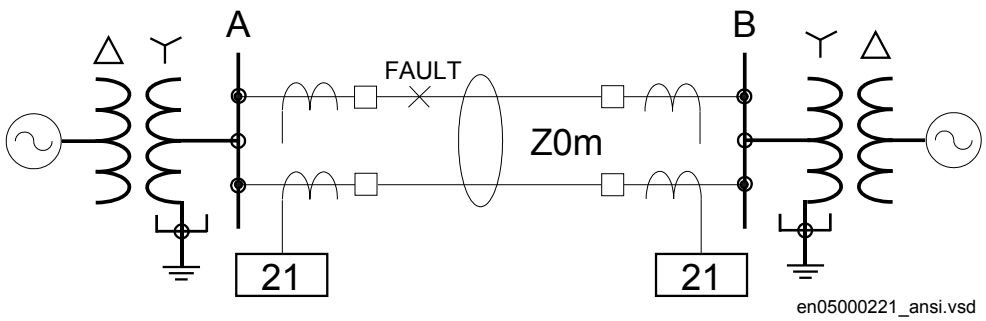

Figure 204: Class 1, parallel line in service

The equivalent circuit of the lines can be simplified, see figure 128.

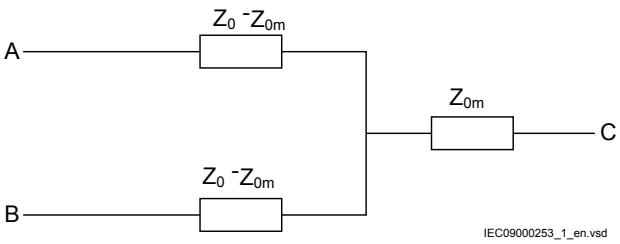

Figure 205: Equivalent zero sequence impedance circuit of the double-circuit, parallel, operating line with a single phase-to-ground fault at the remote busbar

When mutual coupling is introduced, the voltage at the relay point A will be changed according to equation 131.

$$V_{ph} = \overline{Z}1_L \cdot \left(\overline{I}_{ph} + 3\overline{I}_0 \cdot \frac{\overline{Z}0_L - \overline{Z}1_L}{3 \cdot \overline{Z}1_L} + 3\overline{I}_{0p} \frac{\overline{Z}0_m}{3 \cdot \overline{Z}1_L} \right)$$

(Equation 362)

By dividing equation 131 by equation 130 and after some simplification we can write the impedance present to the relay at A side as:

$$Z = \overline{Z1_L} \left(1 + \frac{3\overline{I}0 \cdot \overline{K}Nm}{\overline{I}ph + 3\overline{I}0 \cdot \overline{K}N} \right)$$

(Equation 363)

Where:

KNm = Z0m/(3 · Z1L)

The second part in the parentheses is the error introduced to the measurement of the line impedance.

If the current on the parallel line has negative sign compared to the current on the protected line, that is, the current on the parallel line has an opposite direction compared to the current on the protected line, the distance function will overreach. If the currents have the same direction, the distance protection will underreach.

Maximum overreach will occur if the fault current infeed from remote line end is weak. If considering a single phase-to-ground fault at 'p' unit of the line length from A to B on the parallel line for the case when the fault current infeed from remote line end is zero, the voltage V_A in the faulty phase at A side as in equation 133.

$$\overline{V_A} = \mathrm{p} \cdot \overline{Z1_L} \left(\overline{I_{ph}} + \overline{K_N} \cdot 3\overline{I_0} + \overline{K_{Nm}} \cdot 3\overline{I_{0p}} \right)$$

(Equation 364)

One can also notice that the following relationship exists between the zero sequence currents:

$$3\overline{I_0} \cdot \overline{Z0_L} = 3\overline{I0_p} \cdot \overline{Z0_L} \left(2 - p\right)$$

(Equation 365)

Simplification of equation 134, solving it for 3I0p and substitution of the result into equation 133 gives that the voltage can be drawn as:

$$\overline{V_A} = \mathrm{p} \cdot \overline{Z1_L} \left(\overline{I_{ph}} + \overline{K_N} \cdot 3\overline{I_0} + \overline{K_{Nm}} \cdot \frac{3\overline{I_0} \cdot \mathrm{p}}{2 - \mathrm{p}} \right)$$

(Equation 366)

If we finally divide equation 135 with equation 130 we can draw the impedance present to the IED as

$$\overline{Z} = p \cdot \overline{ZI_L} \left(\frac{\overline{I_{ph}} + \overline{KN} \cdot 3\overline{I_0} + \overline{KN_m} \cdot \frac{3\overline{I_0} \cdot p}{2 - p}}{I_{ph} + 3\overline{I_0} \cdot \overline{KN}} \right)$$

(Equation 367)

Calculation for a 400 kV line, where we for simplicity have excluded the resistance, gives with X1L=0.48 Ohm/Mile, X0L=1.4Ohms/Mile, zone 1 reach is set to 90% of the line reactance p=71% that is, the protection is underreaching with approximately 20%.

The zero sequence mutual coupling can reduce the reach of distance protection on the protected circuit when the parallel line is in normal operation. The reduction of the reach is most pronounced with no current infeed in the IED closest to the fault. This reach reduction is normally less than 15%. But when the reach is reduced at one line end, it is proportionally increased at the opposite line end. So this 15% reach reduction does not significantly affect the operation of a permissive underreaching scheme.

Parallel line out of service and grounded

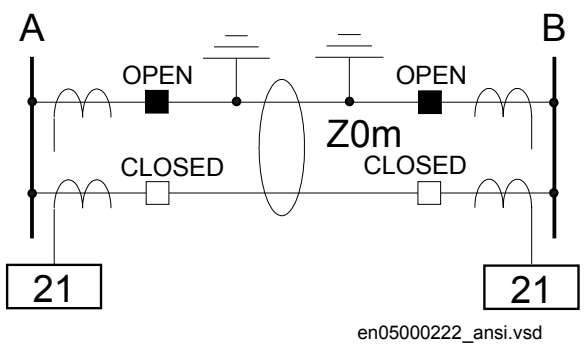

Figure 206: The parallel line is out of service and grounded

When the parallel line is out of service and grounded at both line ends on the bus bar side of the line CTs so that zero sequence current can flow on the parallel line, the equivalent zero sequence circuit of the parallel lines will be according to figure 130.

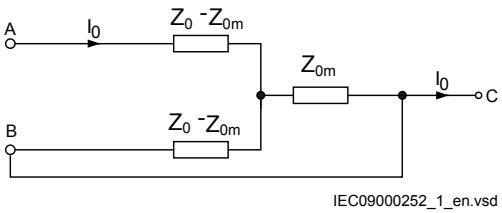

Figure 207: Equivalent zero sequence impedance circuit for the double-circuit line that operates with one circuit disconnected and grounded at both ends

Here the equivalent zero-sequence impedance is equal to Z_0-Z_0m in parallel with (Z_0-Z_{0m})/Z_0-Z_{0m}+Z_{0m} which is equal to equation 137.

$$\overline{Z}_E = \frac{\overline{Z}_0^2 - \overline{Z}_{om}^2}{\overline{Z}_0}$$

(Equation 368)

The influence on the distance measurement will be a considerable overreach, which must be considered when calculating the settings. It is recommended to use a separate setting group for this operation condition since it will reduce the reach considerably when the line is in operation.

All expressions below are proposed for practical use. They assume the value of zero sequence, mutual resistance R_{0m} equals to zero. They consider only the zero sequence, mutual reactance X_{0m}. Calculate the equivalent X_{0E} and R_{0E} zero sequence parameters according to equation 138 and equation 139 for each particular line section and use them for calculating the reach for the underreaching zone.

$$R_{0E} = R_0 \cdot \left(1 + \frac{X_{0m}^2}{R_0^2 + X_0^2} \right)$$

(Equation 369)

$$X_{0E} = X_0 \cdot \left(1 - \frac{X_{0m}^2}{R_0^2 + X_0^2} \right)$$

(Equation 370)

Parallel line out of service and not grounded

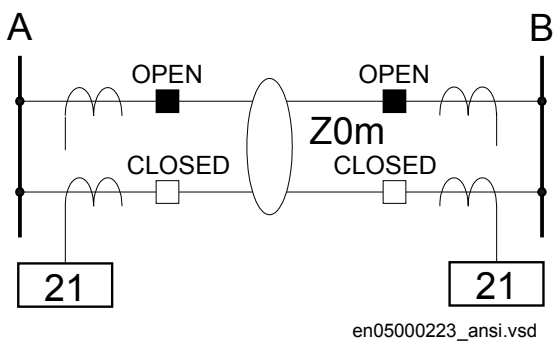

Figure 208: Parallel line is out of service and not grounded

When the parallel line is out of service and not grounded, the zero sequence on that line can only flow through the line admittance to the ground. The line admittance is high which limits the zero-sequence current on the parallel line to very low values. In practice, the equivalent zero-sequence impedance circuit for faults at the remote bus bar can be simplified to the circuit shown in figure 131

The line zero sequence mutual impedance does not influence the measurement of the distance protection in a faulty circuit. This means that the reach of the underreaching

distance protection zone is reduced if, due to operating conditions, the equivalent zero sequence impedance is set according to the conditions when the parallel system is out of operation and grounded at both ends.

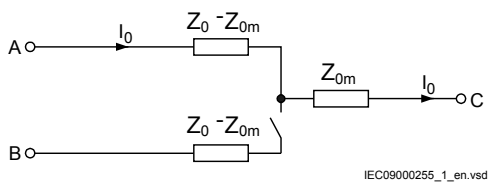

Figure 209: Equivalent zero-sequence impedance circuit for a double-circuit line with one circuit disconnected and not grounded

The reduction of the reach is equal to equation 140.

$$\overline{K}_U = \frac{\frac{1}{3}\cdot\left(2\cdot\overline{Z}_1 + \overline{Z}_{0E}\right) + R_f}{\frac{1}{3}\cdot\left(2\cdot\overline{Z}_1 + \overline{Z}_0\right) + R_f} = 1 - \frac{\overline{Z}_{m0}^{\,2}}{\overline{Z}_0\cdot\left(2\cdot\overline{Z}_1 + \overline{Z}_0 + 3R_f\right)}$$

(Equation 371)

This means that the reach is reduced in reactive and resistive directions. If the real and imaginary components of the constant A are equal to equation 141 and equation 142.

$$\mathrm{Re}(\overline{A}) = R0\cdot(2\cdot R1 + R0 + 3\cdot Rf) - X0\cdot(X0 + 2\cdot X1)$$

(Equation 372)

$$\mathrm{Im}(\overline{A}) = X_0\cdot(2\cdot R_1 + R_0 + 3\cdot R_1) + R_0\cdot(2\cdot X_1 + X_0)$$

(Equation 373)

The real component of the KU factor is equal to equation 143.

$$\mathrm{Re}\left(\overline{K}_u\right) = 1 + \frac{\mathrm{Re}\left(\overline{A}\right)\cdot X_{m0}^{\,2}}{\left[\mathrm{Re}\left(\overline{A}\right)\right]^2 + \left[\mathrm{Im}\left(\overline{A}\right)\right]^2}$$

(Equation 374)

The imaginary component of the same factor is equal to equation 144.

$$\mathrm{Im}\left(\overline{K}_U\right) = \frac{\mathrm{Im}\left(\overline{A}\right) \cdot X_{m0}{}^2}{\left[\mathrm{Re}\left(\overline{A}\right)\right]^2 + \left[\mathrm{Im}\left(\overline{A}\right)\right]^2}$$

(Equation 375)

Ensure that the underreaching zones from both line ends will overlap a sufficient amount (at least 10%) in the middle of the protected circuit.

7.13.2.7 Tapped line application

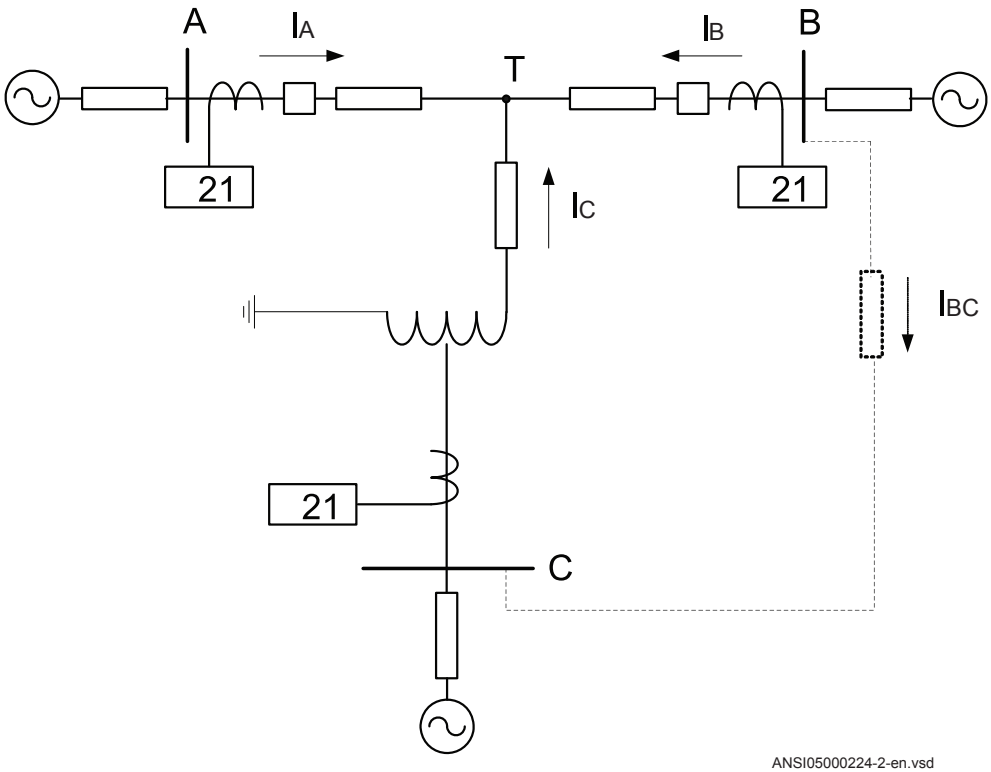

Figure 210: Example of tapped line with Auto transformer

This application gives rise to a similar problem that was highlighted in section Fault infeed from remote end , that is increased measured impedance due to fault current infeed. For example, for faults between the T point and B station the measured impedance at A and C will be:

$$\bar{Z}_A = \bar{Z}_{AT} + \frac{\bar{I}_A + \bar{I}_C}{\bar{I}_A} \cdot \bar{Z}_{TF}$$

(Equation 376)

$$\bar{Z}_C = \bar{Z}_{Trf} + (\bar{Z}_{CT} + \frac{\dot{I}_A + \dot{I}_C}{\dot{I}_C} \cdot \bar{Z}_{TB}) \cdot (\frac{V2}{V1})^2$$

(Equation 377)

Where:

Z_{AT} and Z_{CT}	is the line impedance from the A respective C station to the T point.
I_A and I_C	is fault current from A respective C station for fault between T and B.
V2/V1	Transformation ratio for transformation of impedance at V1 side of the transformer to the measuring side V2 (it is assumed that current and voltage distance function is taken from V2 side of the transformer).
Z_{TF}	is the line impedance from the T point to the fault (F).
Z_{Trf}	is transformer impedance.

For this example with a fault between T and B, the measured impedance from the T point to the fault will be increased by a factor defined as the sum of the currents from T point to the fault divided by the IED current. For the IED at C, the impedance on the high voltage side V1 has to be transferred to the measuring voltage level by the transformer ratio.

Another complication that might occur depending on the topology is that the current from one end can have a reverse direction for fault on the protected line. For example, for faults at T the current from B might go in reverse direction from B to C depending on the system parameters (see the dotted line in figure 133), given that the distance protection in B to T will measure wrong direction.

In three-end application, depending on the source impedance behind the IEDs, the impedances of the protected object and the fault location, it might be necessary to accept zone 2 trip in one end or sequential trip in one end.

Generally for this type of application it is difficult to select settings of zone 1 that both gives overlapping of the zones with enough sensitivity without interference with other zone 1 settings, that is, without selectivity conflicts. Careful fault calculations are necessary to determine suitable settings and selection of proper scheme communication.

Fault resistance

The performance of distance protection for single phase-to-ground faults is very important, because normally more than 70% of the faults on transmission lines are single phase-to-ground faults. At these faults, the fault resistance is composed of three parts: arc resistance, resistance of a tower construction, and tower-footing resistance. The arc resistance can be calculated according to Warrington's formula:

$$Rarc = \frac{28707 \cdot L}{I^{1.4}}$$

(Equation 378)

Where:

L represents the length of the arc (in meters). This equation applies for the distance protection zone 1. Consider approximately three times arc foot spacing for zone 2 to get a reasonable margin against the influence of wind.

I is the actual fault current in A.

In practice, the setting of fault resistance for both phase-to-ground *RFPE* and phase-to-phase *RFPP* should be as high as possible without interfering with the load impedance in order to obtain reliable fault detection.

7.13.3 Series compensation in power systems

The main purpose of series compensation in power systems is virtual reduction of line reactance in order to enhance the power system stability and increase loadability of transmission corridors. The principle is based on compensation of distributed line reactance by insertion of series capacitor (SC). The generated reactive power provided by the capacitor is continuously proportional to the square of the current flowing at the same time through the compensated line and series capacitor. This means that the series capacitor has a self-regulating effect. When the system loading increases, the reactive power generated by series capacitors increases as well. The response of SCs is automatic, instantaneous and continuous.

The main benefits of incorporating series capacitors in transmission lines are:

- Steady state voltage regulation and raise of voltage collapse limit
- Increase power transfer capability by raising the dynamic stability limit
- Improved reactive power balance
- Increase in power transfer capacity
- Reduced costs of power transmission due to decreased investment costs for new power lines

7.13.3.1 Steady state voltage regulation and increase of voltage collapse limit

A series capacitor is capable of compensating the voltage drop of the series inductance in a transmission line, as shown in figure 81. During low loading, the system voltage drop is lower and at the same time, the voltage drop on the series capacitor is lower. When the loading increases and the voltage drop become larger, the contribution of the series capacitor increases and therefore the system voltage at the receiving line end can be regulated.

Series compensation also extends the region of voltage stability by reducing the reactance of the line and consequently the SC is valuable for prevention of voltage collapse. Figure 82 presents the voltage dependence at receiving bus B (as shown in figure 81) on line loading and compensation degree K_C, which is defined according to equation 66. The effect of series compensation is in this particular case obvious and self explanatory.

$$K_C = \frac{X_C}{X_{Line}}$$

(Equation 379)

A typical 500 km long 500 kV line is considered with source impedance

$$Z_{SA1} = 0$$

(Equation 380)

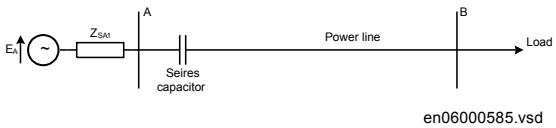

Figure 211: A simple radial power system

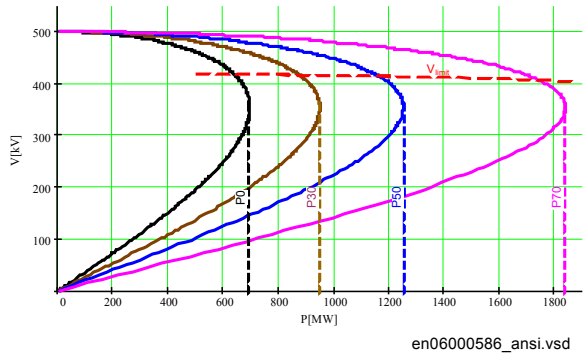

Figure 212: Voltage profile for a simple radial power line with 0, 30, 50 and 70% of compensation

7.13.3.2 Increase in power transfer

The increase in power transfer capability as a function of the degree of compensation for a transmission line can be explained by studying the circuit shown in figure 86. The power transfer on the transmission line is given by the equation 68:

$$P = \frac{|V_A| \cdot |V_B| \cdot \sin(\delta)}{X_{Line} - X_C} = \frac{|V_A| \cdot |V_B| \cdot \sin(\delta)}{X_{Line} \cdot (1 - K_C)}$$

(Equation 381)

The compensation degree K_c is defined as equation 66

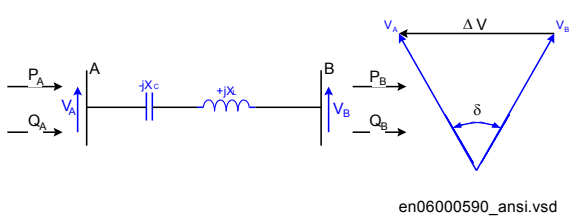

Figure 213: Transmission line with series capacitor

The effect on the power transfer when considering a constant angle difference (δ) between the line ends is illustrated in figure 87. Practical compensation degree runs from 20 to 70 percent. Transmission capability increases of more than two times can be obtained in practice.

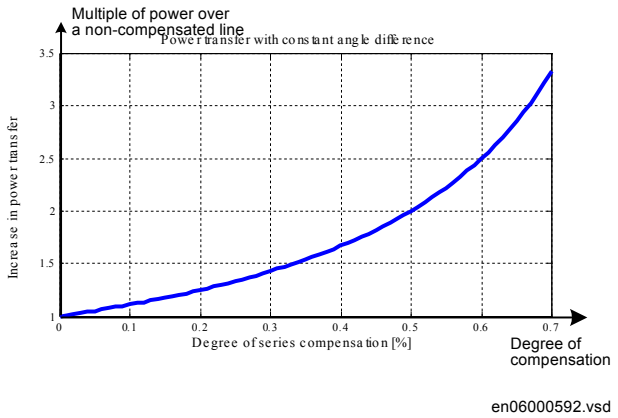

Figure 214: Increase in power transfer over a transmission line depending on degree of series compensation

7.13.3.3 Voltage and current inversion

Series capacitors influence the magnitude and the direction of fault currents in series compensated networks. They consequently influence phase angles of voltages measured in different points of series compensated networks and this performances of different protection functions, which have their operation based on properties of measured voltage and current phasors.

Voltage inversion

Figure 94 presents a part of series compensated line with reactance X_{L1} between the IED point and the fault in point F of series compensated line. The voltage measurement is supposed to be on the bus side, so that series capacitor appears between the IED point and fault on the protected line. Figure 95 presents the corresponding phasor diagrams for the cases with bypassed and fully inserted series capacitor.

Voltage distribution on faulty lossless serial compensated line from fault point F to the bus is linearly dependent on distance from the bus, if there is no capacitor included in scheme (as shown in figure 95). Voltage V_M measured at the bus is equal to voltage drop ΔV_L on the faulty line and lags the current I_F by 90 electrical degrees.

The situation changes with series capacitor included in circuit between the IED point and the fault position. The fault current I_F (see figure 95) is increased due to the series capacitor, generally decreases total impedance between the sources and the fault. The reactive voltage drop ΔV_L on X_{L1} line impedance leads the current by 90 degrees. Voltage drop ΔV_C on series capacitor lags the fault current by 90 degrees. Note that line impedance X_{L1} could be divided into two parts: one between the IED point and the capacitor and one between the capacitor and the fault position. The resulting voltage

V_M in IED point is this way proportional to sum of voltage drops on partial impedances between the IED point and the fault position F, as presented by

$$V_M = I_F \cdot j\left(X_{L1} - X_C\right)$$

(Equation 382)

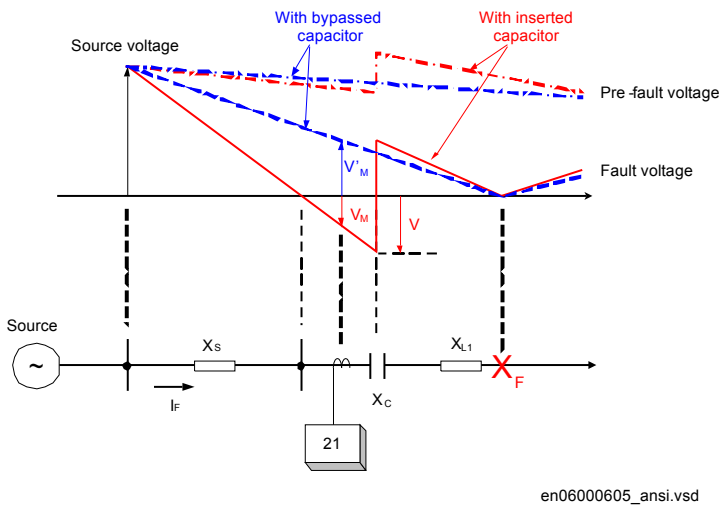

Figure 215: Voltage inversion on series compensated line

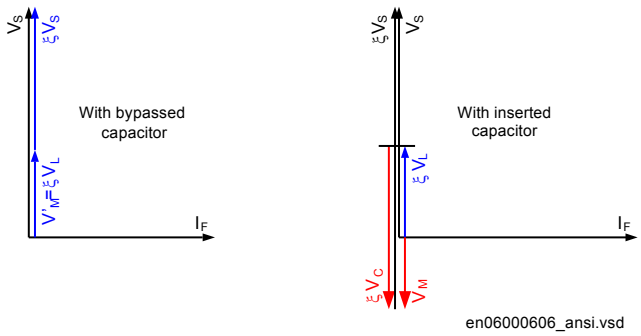

Figure 216: Phasor diagrams of currents and voltages for the bypassed and inserted series capacitor during voltage inversion

It is obvious that voltage V_M will lead the fault current I_F as long as $X_{L1} > X_C$. This situation corresponds, from the directionality point of view, to fault conditions on line without series capacitor. Voltage V_M in IED point will lag the fault current I_F in case when:

$$X_{L1} < X_C < X_S + X_{L1}$$

(Equation 383)

Where

X_S is the source impedance behind the IED

The IED point voltage inverses its direction due to presence of series capacitor and its dimension. It is a common practice to call this phenomenon voltage inversion. Its consequences on operation of different protections in series compensated networks depend on their operating principle. The most known effect has voltage inversion on directional measurement of distance IEDs (see chapter "Distance protection" for more details), which must for this reason comprise special measures against this phenomenon.

There will be no voltage inversion phenomena for reverse faults in system with VTs located on the bus side of series capacitor. The allocation of VTs to the line side does not eliminate the phenomenon, because it appears again for faults on the bus side of IED point.

Current inversion

Figure 96 presents part of a series compensated line with corresponding equivalent voltage source. It is generally anticipated that fault current I_F flows on non-compensated lines from power source towards the fault F on the protected line. Series capacitor may change the situation.

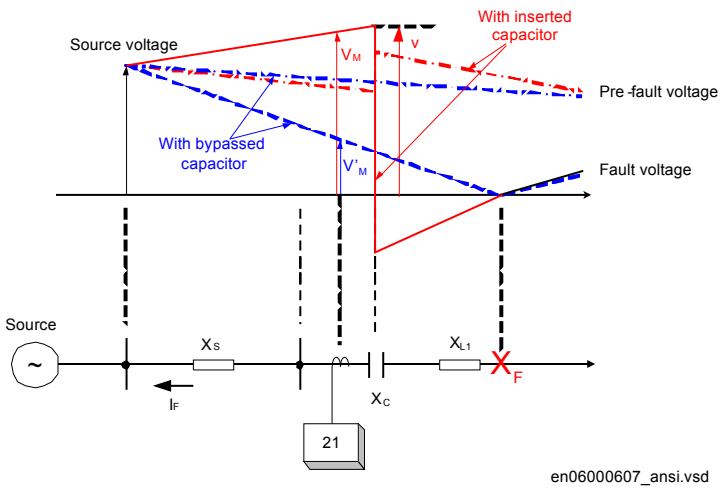

Figure 217: Current inversion on series compensated line

The relative phase position of fault current I_F compared to the source voltage V_S depends in general on the character of the resultant reactance between the source and the fault position. Two possibilities appear:

$$X_S - X_C + X_{L1} > 0$$
$$X_S - X_C + X_{L1} < 0$$

(Equation 384)

The first case corresponds also to conditions on non compensated lines and in cases, when the capacitor is bypassed either by spark gap or by the bypass switch, as shown in phasor diagram in figure 97. The resultant reactance is in this case of inductive nature and the fault currents lags source voltage by 90 electrical degrees.

The resultant reactance is of capacitive nature in the second case. Fault current will for this reason lead the source voltage by 90 electrical degrees, which means that reactive current will flow from series compensated line to the system. The system conditions are in such case presented by equation 73

$$X_C > X_S + X_{L1}$$

(Equation 385)

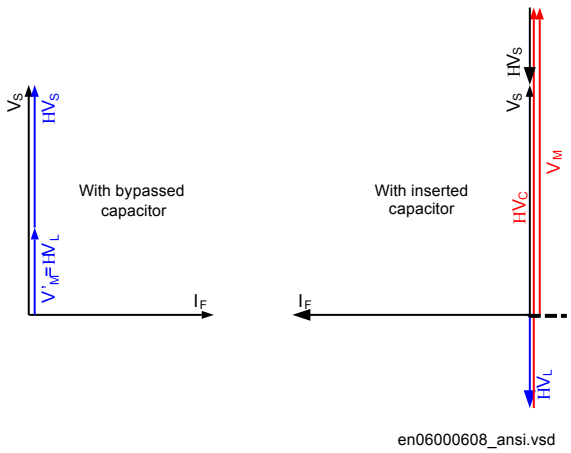

Figure 218: Phasor diagrams of currents and voltages for the bypassed and inserted series capacitor during current inversion

It is a common practice to call this phenomenon current inversion. Its consequences on operation of different protections in series compensated networks depend on their operating principle. The most known effect has current inversion on operation of distance IEDs (as shown in section "Distance protection" for more details), which cannot be used for the protection of series compensated lines with possible current inversion. Equation 73 shows also big dependence of possible current inversion on

series compensated lines on location of series capacitors. $X_{L1} = 0$ for faults just behind the capacitor when located at line IED and only the source impedance prevents current inversion. Current inversion has been considered for many years only a theoretical possibility due to relatively low values of source impedances (big power plants) compared to the capacitor reactance. The possibility for current inversion in modern networks is increasing and must be studied carefully during system preparatory studies.

The current inversion phenomenon should not be studied only for the purposes of protection devices measuring phase currents. Directional comparison protections, based on residual (zero sequence) and negative sequence currents should be considered in studies as well. Current inversion in zero sequence systems with low zero sequence source impedance (a number of power transformers connected in parallel) must be considered as practical possibility in many modern networks.

Location of instrument transformers

Location of instrument transformers relative to the line end series capacitors plays an important role regarding the dependability and security of a complete protection scheme. It is on the other hand necessary to point out the particular dependence of those protection schemes, which need for their operation information on voltage in IED point.

Protection schemes with their operating principle depending on current measurement only, like line current differential protection are relatively independent on CT location. Figure 100 shows schematically the possible locations of instrument transformers related to the position of line-end series capacitor.

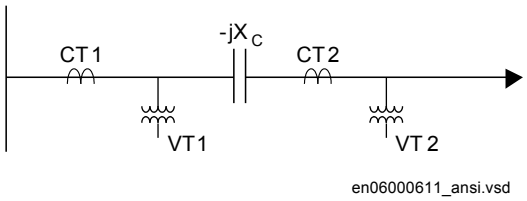

Figure 219: Possible positions of instrument transformers relative to line end series capacitor

Bus side instrument transformers

CT1 and VT1 on figure 100 represent the case with bus side instrument transformers. The protection devices are in this case exposed to possible voltage and current inversion for line faults, which decreases the required dependability. In addition to this may series capacitor cause negative apparent impedance to distance IEDs on protected and adjacent lines as well for close-in line faults (see also figure 102 LOC=0%), which requires special design of distance measuring elements to cope with such phenomena. The advantage of such installation is that the protection zone covers also the series

capacitor as a part of protected power line, so that line protection will detect and cleared also parallel faults on series capacitor.

Line side instrument transformers

CT2 and VT2 on figure 100 represent the case with line side instrument transformers. The protective devices will not be exposed to voltage and current inversion for faults on the protected line, which increases the dependability. Distance protection zone 1 may be active in most applications, which is not the case when the bus side instrument transformers are used.

Distance IEDs are exposed especially to voltage inversion for close-in reverse faults, which decreases the security. The effect of negative apparent reactance must be studied seriously in case of reverse directed distance protection zones used by distance IEDs for teleprotection schemes. Series capacitors located between the voltage instruments transformers and the buses reduce the apparent zero sequence source impedance and may cause voltage as well as current inversion in zero sequence equivalent networks for line faults. It is for this reason absolutely necessary to study the possible effect on operation of zero sequence directional ground-fault overcurrent protection before its installation.

Dual side instrument transformers

Installations with line side CT2 and bus side VT1 are not very common. More common are installations with line side VT2 and bus side CT1. They appear as de facto installations also in switchyards with double-bus double-breaker and breaker-and-a-half arrangement. The advantage of such schemes is that the unit protections cover also for shunt faults in series capacitors and at the same time the voltage inversion does not appear for faults on the protected line.

Many installations with line-end series capacitors have available voltage instrument transformers on both sides. In such case it is recommended to use the VTs for each particular protection function to best suit its specific characteristics and expectations on dependability and security. The line side VT can for example be used by the distance protection and the bus side VT by the directional residual OC ground fault protection.

Apparent impedances and MOV influence

Series capacitors reduce due to their character the apparent impedance measured by distance IEDs on protected power lines. Figure 101 presents typical locations of capacitor banks on power lines together with corresponding compensation degrees. Distance IED near the feeding bus will see in different cases fault on remote end bus depending on type of overvoltage protection used on capacitor bank (spark gap or MOV) and SC location on protected power line.

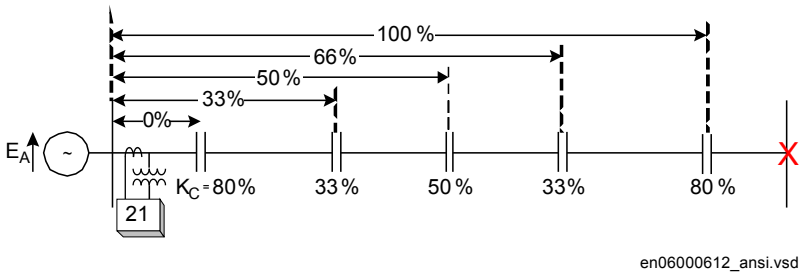

Figure 220: Typical locations of capacitor banks on series compensated line

Implementation of spark gaps for capacitor overvoltage protection makes the picture relatively simple, because they either flash over or not. The apparent impedance corresponds to the impedance of non-compensated line, as shown in figure 102 case $K_C = 0\%$.

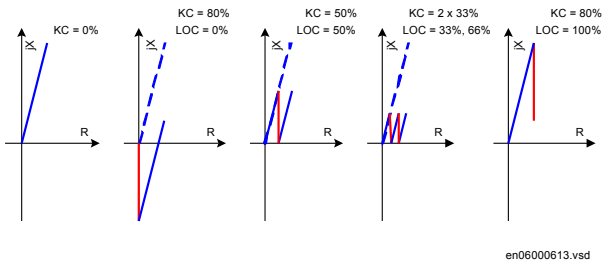

Figure 221: Apparent impedances seen by distance IED for different SC locations and spark gaps used for overvoltage protection

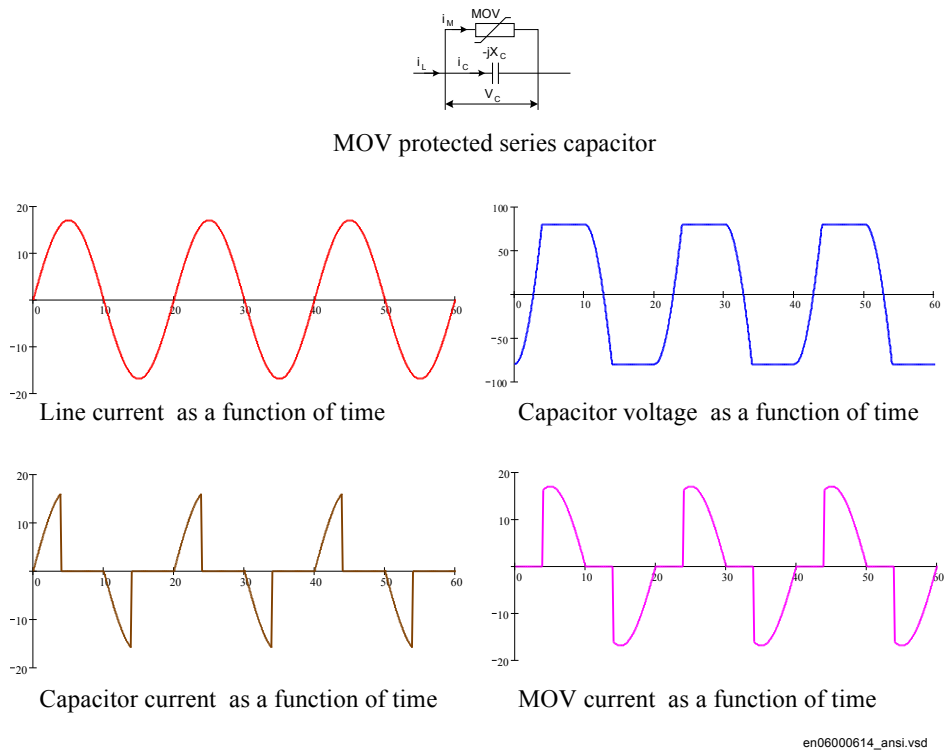

Figure 222: MOV protected capacitor with examples of capacitor voltage and corresponding currents

The impedance apparent to distance IED is always reduced for the amount of capacitive reactance included between the fault and IED point, when the spark gap does not flash over, as presented for typical cases in figure 102. Here it is necessary to distinguish between two typical cases:

- Series capacitor only reduces the apparent impedance, but it does not cause wrong directional measurement. Such cases are presented in figure 102 for 50% compensation at 50% of line length and 33% compensation located on 33% and 66% of line length. The remote end compensation has the same effect.
- The voltage inversion occurs in cases when the capacitor reactance between the IED point and fault appears bigger than the corresponding line reactance, Figure 102, 80% compensation at local end. A voltage inversion occurs in IED point and the distance IED will see wrong direction towards the fault, if no special measures have been introduced in its design.

The situation differs when metal oxide varistors (MOV) are used for capacitor overvoltage protection. MOVs conduct current, for the difference of spark gaps, only when the instantaneous voltage drop over the capacitor becomes higher than the protective voltage level in each half-cycle separately, see figure 103.

Extensive studies at Bonneville Power Administration in USA (*ref. Goldsworthy, D,L "A Linearized Model for MOV-Protected series capacitors" Paper 86SM357–8 IEEE/ PES summer meeting in Mexico City July 1986*) have resulted in construction of a non-linear equivalent circuit with series connected capacitor and resistor. Their value depends on complete line (fault) current and protection factor k_p. The later is defined by equation 80.

$$k_p = \frac{V_{MOV}}{V_{NC}}$$

(Equation 386)

Where

V_{MOV} is the maximum instantaneous voltage expected between the capacitor immediately before the MOV has conducted or during operation of the MOV, divaded by √2

V_{NC} is the rated voltage in RMS of the series capacitor

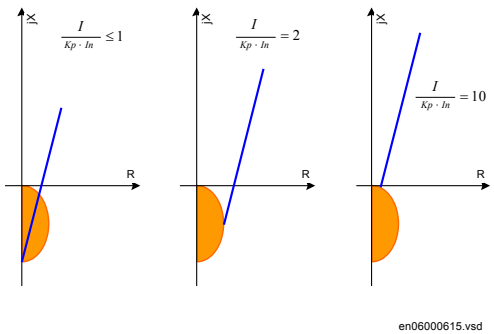

Figure 223: Equivalent impedance of MOV protected capacitor in dependence of protection factor K_P

Figure 104 presents three typical cases for series capacitor located at line end (case LOC=0% in figure 102).

- Series capacitor prevails the scheme as long as the line current remains lower or equal to its protective current level ($I \leq k_p \cdot I_{NC}$). Line apparent impedance is in this case reduced for the complete reactance of a series capacitor.

- 50% of capacitor reactance appears in series with resistance, which corresponds to approximately 36% of capacitor reactance when the line current equals two times the protective current level ($I \leq 2 \cdot k_p \cdot I_{NC}$). This information has high importance for setting of distance protection IED reach in resistive direction, for phase to ground fault measurement as well as for phase to phase measurement.

- Series capacitor becomes nearly completely bridged by MOV when the line current becomes higher than 10-times the protective current level ($I \leq 10 \cdot k_p \cdot I_{NC}$).

7.13.3.4 Impact of series compensation on protective IED of adjacent lines

Voltage inversion is not characteristic for the buses and IED points closest to the series compensated line only. It can spread also deeper into the network and this way influences the selection of protection devices (mostly distance IEDs) on remote ends of lines adjacent to the series compensated circuit, and sometimes even deeper in the network.

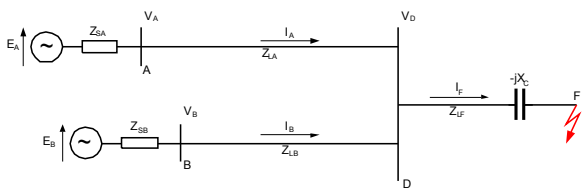

en06000616_ansi.vsd

Figure 224: Voltage inversion in series compensated network due to fault current infeed

Voltage at the B bus (as shown in figure 105) is calculated for the loss-less system according to the equation below.

$$V_B = V_D + I_B \cdot jX_{LB} = \left(I_A + I_B\right) \cdot j\left(X_{LF} - X_C\right) + I_B \cdot jX_{LB}$$

(Equation 387)

Further development of equation 81 gives the following expressions:

$$V_B = jI_B \cdot \left[X_{LB} + \left(1 + \frac{I_A}{I_B}\right) \cdot \left(X_{LF} - X_C\right) \right]$$

(Equation 388)

$$X_C\left(V_B = 0\right) = \frac{X_{LB}}{1 + \frac{I_A}{I_B}} + X_{LF}$$

(Equation 389)

Equation 82 indicates the fact that the infeed current I_A increases the apparent value of capacitive reactance in system: bigger the infeed of fault current, bigger the apparent series capacitor in a complete series compensated network. It is possible to say that

equation 83 indicates the deepness of the network to which it will feel the influence of series compensation through the effect of voltage inversion.

It is also obvious that the position of series capacitor on compensated line influences in great extent the deepness of voltage inversion in adjacent system. Line impedance X_{LF} between D bus and the fault becomes equal to zero, if the capacitor is installed near the bus and the fault appears just behind the capacitor. This may cause the phenomenon of voltage inversion to be expanded very deep into the adjacent network, especially if on one hand the compensated line is very long with high degree of compensation, and the adjacent lines are, on the other hand, relatively short.

Extensive system studies are necessary before final decision is made on implementation and location of series capacitors in network. It requires to correctly estimate their influence on performances of (especially) existing distance IEDs. It is possible that the costs for number of protective devices, which should be replaced by more appropriate ones due to the effect of applied series compensation, influences the future position of series capacitors in power network.

Possibilities for voltage inversion at remote buses should not be studied for short circuits with zero fault resistance only. It is necessary to consider cases with higher fault resistances, for which spark gaps or MOVs on series capacitors will not conduct at all. At the same time this kind of investigation must consider also the maximum sensitivity and possible resistive reach of distance protection devices, which on the other hand simplifies the problem.

Application of MOVs as non-linear elements for capacitor overvoltage protection makes simple calculations often impossible. Different kinds of transient or dynamic network simulations are in such cases unavoidable.

7.13.3.5 Distance protection

Distance protection due to its basic characteristics, is the most used protection principle on series compensated and adjacent lines worldwide. It has at the same time caused a lot of challenges to protection society, especially when it comes to directional measurement and transient overreach.

Distance IED in fact does not measure impedance or quotient between line current and voltage. Quantity 1= Operating quantity - Restrain quantity Quantity 2= Polarizing quantity. Typically Operating quantity is the replica impedance drop. Restraining quantity is the system voltage Polarizing quantity shapes the characteristics in different way and is not discussed here.

Distance IEDs comprise in their replica impedance only the replicas of line inductance and resistance, but they do not comprise any replica of series capacitor on the protected line and its protection circuits (spark gap and or MOV). This way they form wrong picture of the protected line and all “solutions” related to distance protection of series

compensated and adjacent lines are concentrated on finding some parallel ways, which may help eliminating the basic reason for wrong measurement. The most known of them are decrease of the reach due to presence of series capacitor, which apparently decreases the line reactance, and introduction of permanent memory voltage in directional measurement.

Series compensated and adjacent lines are often the more important links in a transmission networks and delayed fault clearance is undesirable. This makes it necessary to install distance protection in combination with telecommunication. The most common is distance protection in Permissive Overreaching Transfer Trip mode (POTT).

7.13.3.6 Underreaching and overreaching schemes

It is a basic rule that the underreaching distance protection zone should under no circumstances overreach for the fault at the remote end bus, and the overreaching zone should always, under all system conditions, cover the same fault. In order to obtain section selectivity, the first distance (underreaching) protection zone must be set to a reach less than the reactance of the compensated line in accordance with figure 106.

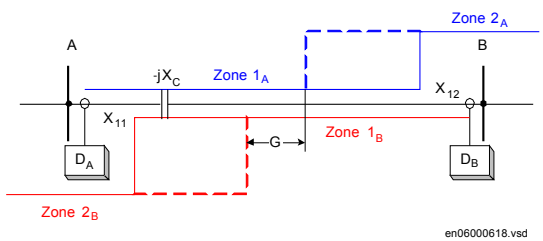

Figure 225: Underreaching (Zone 1) and overreaching (Zone 2) on series compensated line

The underreaching zone will have reduced reach in cases of bypassed series capacitor, as shown in the dashed line in figure 106. The overreaching zone (Zone 2) can this way cover bigger portion of the protected line, but must always cover with certain margin the remote end bus. Distance protection Zone 1 is often set to

$$X_{Z1} = K_S \cdot \left(X_{11} + X_{12} - X_C \right)$$

(Equation 390)

Here K_S is a safety factor, presented graphically in figure 107, which covers for possible overreaching due to low frequency (sub-harmonic) oscillations. Here it should be noted separately that compensation degree K_C in figure 107 relates to total system reactance, inclusive line and source impedance reactance. The same setting applies regardless MOV or spark gaps are used for capacitor overvoltage protection.

Equation 84 is applicable for the case when the VTs are located on the bus side of series capacitor. It is possible to remove X_C from the equation in cases of VTs installed in line side, but it is still necessary to consider the safety factor K_S .

If the capacitor is out of service or bypassed, the reach with these settings can be less than 50% of protected line dependent on compensation degree and there will be a section, G in figure 106, of the power line where no tripping occurs from either end.

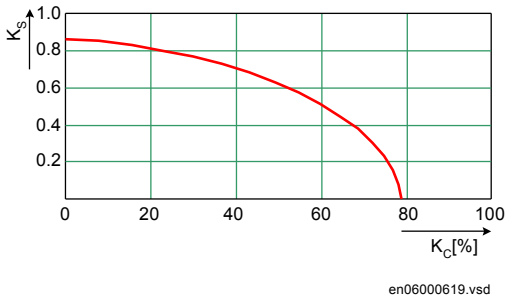

Figure 226: Underreaching safety factor K_S in dependence on system compensation degree K_C

For that reason permissive underreaching schemes can hardly be used as a main protection. Permissive overreaching distance protection or some kind of directional or unit protection must be used.

The overreach must be of an order so it overreaches when the capacitor is bypassed or out of service. Figure 108 shows the permissive zones. The first underreaching zone can be kept in the total protection but it only has the feature of a back-up protection for close up faults. The overreach is usually of the same order as the permissive zone. When the capacitor is in operation the permissive zone will have a very high degree of overreach which can be considered as a disadvantage from a security point of view.

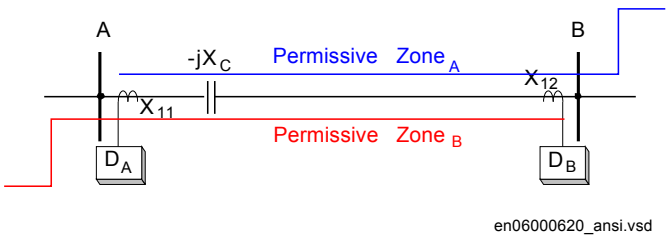

Figure 227: Permissive overreach distance protection scheme

Negative IED impedance, positive fault current (voltage inversion)

Assume in equation 85

$$X_{11} < X_C < X_S + X_{11}$$

(Equation 391)

and in figure 109

a three phase fault occurs beyond the capacitor. The resultant IED impedance seen from the D_B IED location to the fault may become negative (voltage inversion) until the spark gap has flashed.

Distance protections of adjacent power lines shown in figure 109 are influenced by this negative impedance. If the intermediate infeed of short circuit power by other lines is taken into consideration, the negative voltage drop on X_C is amplified and a protection far away from the faulty line can maloperate by its instantaneous operating distance zone, if no precaution is taken. Impedances seen by distance IEDs on adjacent power lines are presented by equations 86 to 89.

$$I = I_1 + I_2 + I_3$$

(Equation 392)

$$X_{DA1} = X_{A1} + \frac{\bar{I}_F}{\bar{I}_{A1}} \cdot \left(X_C - X_{11} \right)$$

(Equation 393)

$$X_{DA2} = X_{A2} + \frac{\bar{I}_F}{\bar{I}_{A2}} \cdot \left(X_C - X_{11} \right)$$

(Equation 394)

$$X_{DA3} = X_{A3} + \frac{\bar{I}_F}{\bar{I}_{A3}} \cdot \left(X_C - X_{11} \right)$$

(Equation 395)

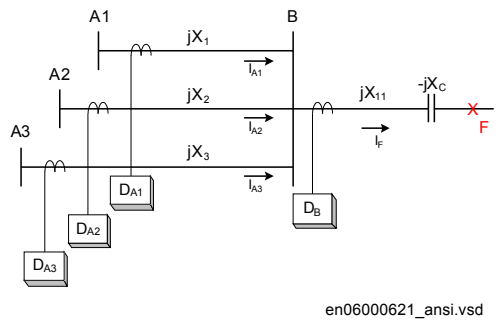

Figure 228: Distance IED on adjacent power lines are influenced by the negative impedance

Normally the first zone of this protection must be delayed until the gap flashing has taken place. If the delay is not acceptable, some directional comparison must also be added to the protection of all adjacent power lines. As stated above, a good protection system must be able to operate correctly both before and after gap flashing occurs. Distance protection can be used, but careful studies must be made for each individual case. The rationale described applies to both conventional spark gap and MOV protected capacitors.

Special attention should be paid to selection of distance protection on shorter adjacent power lines in cases of series capacitors located at the line end. In such case the reactance of a short adjacent line may be lower than the capacitor reactance and voltage inversion phenomenon may occur also on remote end of adjacent lines. Distance protection of such line must have built-in functionality which applies normally to protection of series compensated lines.

It usually takes a bit of a time before the spark gap flashes, and sometimes the fault current will be of such a magnitude that there will not be any flashover and the negative impedance will be sustained. If equation 90 is valid

$$X_{11} < X_C < X_S + X_{11}$$

(Equation 396)

in figure 110, the fault current will have the same direction as when the capacitor is bypassed. So, the directional measurement is correct but the impedance measured is negative and if the characteristic crosses the origin shown in figure 110 the IED cannot operate. However, if there is a memory circuit designed so it covers the negative impedance, a three phase fault can be successfully cleared by the distance protection. As soon as the spark gap has flashed the situation for protection will be as for an

ordinary fault. However, a good protection system should be able to operate correctly before and after gap flashing occurs.

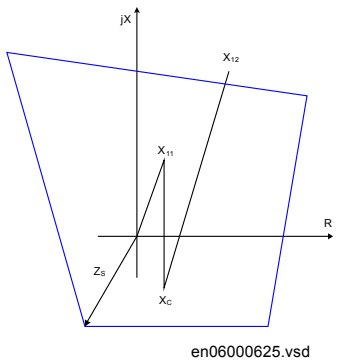

Figure 229: Cross-polarized quadrilateral characteristic

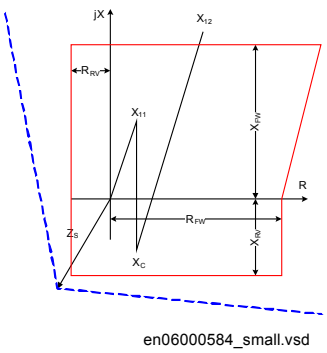

Figure 230: Quadrilateral characteristic with separate impedance and directional measurement

If the distance protection is equipped with a ground-fault measuring unit, the negative impedance occurs when

$$\left|3 \cdot X_C\right| > \left|2 \cdot X_{1\_11} + X_{0\_11}\right|$$

(Equation 397)

Cross-polarized distance protection (either with mho or quadrilateral characteristic) will normally handle ground-faults satisfactory if the negative impedance occurs inside the characteristic. The operating area for negative impedance depends upon the magnitude of the source impedance and calculations must be made on a case by case basis, as shown in figure 110. Distance IEDs with separate impedance and directional measurement offer additional setting and operational flexibility when it comes to measurement of negative apparent impedance (as shown in figure 111).

Negative IED impedance, negative fault current (current inversion)

If equation 92 is valid in Figure 96 and a fault occurs behind the capacitor, the resultant reactance becomes negative and the fault current will have an opposite direction compared with fault current in a power line without a capacitor (current inversion). The negative direction of the fault current will persist until the spark gap has flashed. Sometimes there will be no flashover at all, because the fault current is less than the setting value of the spark gap. The negative fault current will cause a high voltage on

the network. The situation will be the same even if a MOV is used. However, depending upon the setting of the MOV, the fault current will have a resistive component.

$$X_C > X_S + X_{11}$$

(Equation 398)

The problems described here are accentuated with a three phase or phase-to-phase fault, but the negative fault current can also exist for a single-phase fault. The condition for a negative current in case of an ground fault can be written as follows:

$$\left|3 \cdot X_C\right| > \left|2 \cdot X_{1\_L1} + X_{0\_L1} + 2 \cdot X_{0\_S} + X_{1\_S}\right|$$

(Equation 399)

All designations relates to figure 96. A good protection system must be able to cope with both positive and negative direction of the fault current, if such conditions can occur. A distance protection cannot operate for negative fault current. The directional element gives the wrong direction. Therefore, if a problem with negative fault current exists, distance protection is not a suitable solution. In practice, negative fault current seldom occurs. In normal network configurations the gaps will flash in this case.

Double circuit, parallel operating series compensated lines

Two parallel power lines running in electrically close vicinity to each other and ending at the same busbar at both ends (as shown in figure 112) causes some challenges for distance protection because of the mutual impedance in the zero sequence system. The current reversal phenomenon also raises problems from the protection point of view, particularly when the power lines are short and when permissive overreach schemes are used.

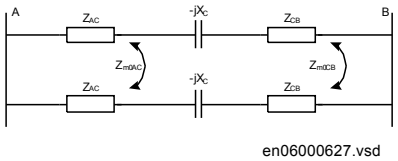

Figure 231: Double circuit, parallel operating line

Zero sequence mutual impedance Z_{m0} cannot significantly influence the operation of distance protection as long as both circuits are operating in parallel and all precautions related to settings of distance protection on series compensated line have been considered. Influence of disconnected parallel circuit, which is grounded at both ends, on operation of distance protection on operating circuit is known.

Series compensation additionally exaggerates the effect of zero sequence mutual impedance between two circuits, see figure 113. It presents a zero sequence equivalent circuit for a fault at B bus of a double circuit line with one circuit disconnected and

grounded at both IEDs. The effect of zero sequence mutual impedance on possible overreaching of distance IEDs at A bus is increased compared to non compensated operation, because series capacitor does not compensate for this reactance. The reach of underreaching distance protection zone 1 for phase-to-ground measuring loops must further be decreased for such operating conditions.

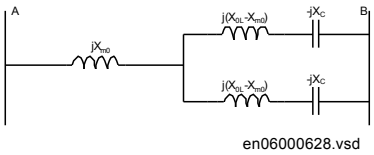

Figure 232: Zero sequence equivalent circuit of a series compensated double circuit line with one circuit disconnected and grounded at both IEDs

Zero sequence mutual impedance may disturb also correct operation of distance protection for external evolving faults, when one circuit has already been disconnected in one phase and runs non-symmetrical during dead time of single pole autoreclosing cycle. All such operating conditions must carefully be studied in advance and simulated by dynamic simulations in order to fine tune settings of distance IEDs.

If the fault occurs in point F of the parallel operating circuits, as presented in figure 114, than also one distance IED (operating in POTT teleprotection scheme) on parallel, healthy circuit will send a carrier signal CSAB to the remote line end, where this signal will be received as a carrier receive signal CRBB.

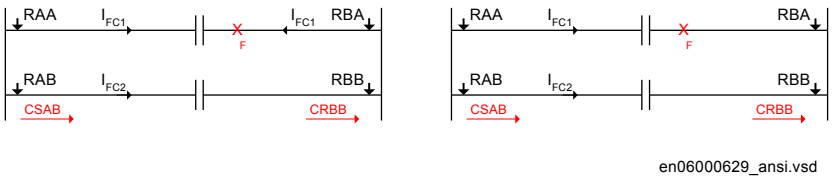

Figure 233: Current reversal phenomenon on parallel operating circuits

It is possible to expect faster IED operation and breaker opening at the bus closer to fault, which will reverse the current direction on the healthy circuit. Distance IED RBB will suddenly detect fault in forward direction and, if CRBB signal is still present due to long reset time of IED RAB and especially telecommunication equipment, trip its related circuit breaker, since all conditions for POTT have been fulfilled. Zero sequence mutual impedance will additionally influence this process, since it increases the magnitude of fault current in healthy circuit after the opening of first circuit breaker. The so called current reversal phenomenon may cause unwanted operation of protection on healthy circuit and this way endangers even more the complete system stability.

To avoid the unwanted tripping, some manufacturers provide a feature in their distance protection which detects that the fault current has changed in direction and temporarily blocks distance protection. Another method employed is to temporarily block the signals received at the healthy line as soon as the parallel faulty line protection initiates tripping. The second mentioned method has an advantage in that not the whole protection is blocked for the short period. The disadvantage is that a local communication is needed between two protection devices in the neighboring bays of the same substation.

Distance protection used on series compensated lines must have a high overreach to cover the whole transmission line also when the capacitors are bypassed or out of service. When the capacitors are in service, the overreach will increase tremendously and the whole system will be very sensitive for false teleprotection signals. Current reversal difficulties will be accentuated because the ratio of mutual impedance against self-impedance will be much higher than for a non-compensated line.

If non-unit protection is to be used in a directional comparison mode, schemes based on negative sequence quantities offer the advantage that they are insensitive to mutual coupling. However, they can only be used for phase-to-ground and phase-to-phase faults. For three-phase faults an additional protection must be provided.

7.13.4 Setting guidelines

7.13.4.1 General

The settings for Distance measuring zones, quadrilateral characteristic (ZMFCPDIS) are done in primary values. The instrument transformer ratio that has been set for the analog input card is used to automatically convert the measured secondary input signals to primary values used in ZMFCPDIS.

The following basics must be considered, depending on application, when doing the setting calculations:

- Errors introduced by current and voltage instrument transformers, particularly under transient conditions.
- Inaccuracies in the line zero-sequence impedance data, and their effect on the calculated value of the ground-return compensation factor.
- The effect of infeed between the IED and the fault location, including the influence of different Z_0/Z_1 ratios of the various sources.
- The phase impedance of non transposed lines is not identical for all fault loops. The difference between the impedances for different phase-to-ground loops can be as large as 5-10% of the total line impedance.
- The effect of a load transfer between the IEDs of the protected fault resistance is considerable, the effect must be recognized.
- Zero-sequence mutual coupling from parallel lines.

7.13.4.2 Setting of zone 1

The different errors mentioned earlier usually require a limitation of the underreaching zone (zone 1) to 75%...90% of the protected line.

In case of parallel lines, consider the influence of the mutual coupling according to section "Parallel line application with mutual coupling" and select the case(s) that are valid in the particular application. By proper setting it is possible to compensate for the cases when the parallel line is in operation, out of service and not grounded and out of service and grounded in both ends. The setting of the ground-fault reach should be <85% also when the parallel line is out of service and grounded at both ends (the worst case).

7.13.4.3 Setting of overreaching zone

The first overreaching zone (zone 2) must detect faults on the whole protected line. Considering the different errors that might influence the measurement in the same way as for zone 1, it is necessary to increase the reach of the overreaching zone to at least 120% of the protected line. The zone 2 reach can be even higher if the fault infeed from adjacent lines at the remote end is considerably higher than the fault current that comes from behind of the IED towards the fault.

The setting must not exceed 80% of the following impedances:

- The impedance corresponding to the protected line, plus the first zone reach of the shortest adjacent line.
- The impedance corresponding to the protected line, plus the impedance of the maximum number of transformers operating in parallel on the bus at the remote end of the protected line.

Larger overreach than the mentioned 80% can often be acceptable due to fault current infeed from other lines. This requires however analysis by means of fault calculations.

If the chosen zone 2 reach gives such a value that it will interfere with zone 2 on adjacent lines, the time delay of zone 2 must be increased by approximately 200 ms to avoid unwanted operation in cases when the telecommunication for the short adjacent line at the remote end is down during faults. The zone 2 must not be reduced below 120% of the protected line section. The whole line must be covered under all conditions.

The requirement that the zone 2 shall not reach more than 80% of the shortest adjacent line at remote end is highlighted in the example below.

If a fault occurs at point F, see figure 134, the IED at point A senses the impedance:

$$\overline{Z}_{AF} = \frac{\overline{V}_A}{\overline{I}_A} = \overline{Z}_{AC} + \frac{\overline{I}_A + \overline{I}_C}{\overline{I}_A} \cdot \overline{Z}_{CF} + \frac{\overline{I}_A + \overline{I}_C + \overline{I}_B}{\overline{I}_A} \cdot R_F = \overline{Z}_{AC} + \left(1 + \frac{\overline{I}_C}{\overline{I}_A}\right) \cdot \overline{Z}_{CF} + \left(1 + \frac{\overline{I}_C + \overline{I}_B}{\overline{I}_A}\right) \cdot R_F$$

(Equation 400)

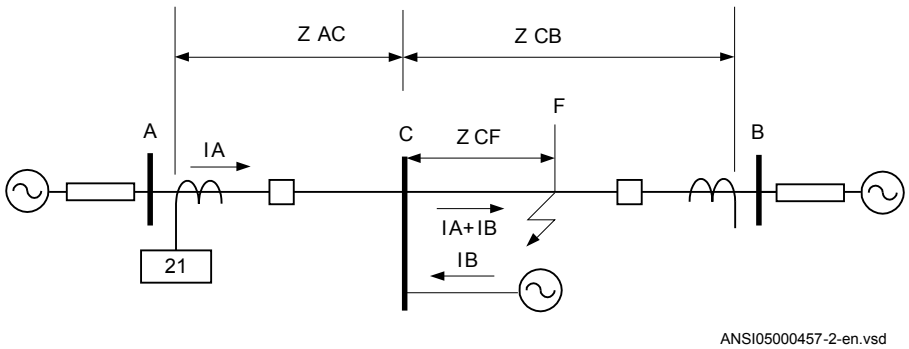

Figure 234: Setting of overreaching zone

7.13.4.4 Setting of reverse zone

The reverse zone (zone RV) is applicable for purposes of scheme communication logic, current reversal logic, weak-end infeed logic, and so on. The same applies to the back-up protection of the bus bar or power transformers. It is necessary to secure, that it always covers the overreaching zone, used at the remote line IED for the telecommunication purposes.

Consider the possible enlarging factor that might exist due to fault infeed from adjacent lines. The equation can be used to calculate the reach in reverse direction when the zone is used for blocking scheme, weak-end infeed, and so on.

$$Z_{rev} \geq 1.2 \times (Z2_{rem} - ZL)$$

(Equation 401)

Where:

ZL is the protected line impedance.

Z2rem is the zone 2 setting (zone used in the POTT scheme) at the remote end of the protected line.

In many applications it might be necessary to consider the enlarging factor due to the fault current infeed from adjacent lines in the reverse direction in order to obtain certain sensitivity.

7.13.4.5 Series compensated and adjacent lines

Setting of zone 1

A voltage reversal can cause an artificial internal fault (voltage zero) on faulty line as well as on the adjacent lines. This artificial fault always have a resistive component, this is however small and can mostly not be used to prevent tripping of a healthy adjacent line.

An independent tripping zone 1 facing a bus which can be exposed to voltage reversal have to be set with reduced reach with respect to this false fault. When the fault can move and pass the bus, the zone 1 in this station must be blocked. Protection further out in the net must be set with respect to this apparent fault as the protection at the bus.

Different settings of the reach for the zone (ZMFCPDIS, 21) characteristic in forward and reverse direction makes it possible to optimize the settings in order to maximize dependability and security for independent zone1.

Due to the sub-harmonic oscillation swinging caused by the series capacitor at fault conditions the reach of the under-reaching zone 1 must be further reduced. Zone 1 can only be set with a percentage reach to the artificial fault according to the curve in 116

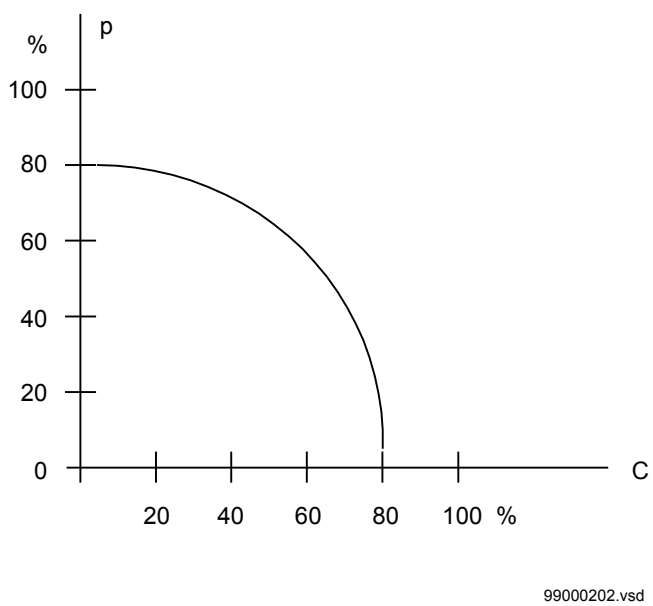

Figure 235: Reduced reach due to the expected sub-harmonic oscillations at different degrees of compensation

$$c = \text{degree of compensation}\left(\frac{X_c}{X_l}\right)$$

(Equation 402)

X_c is the reactance of the series capacitor

p is the maximum allowable reach for an under-reaching zone with respect to the sub-harmonic swinging related to the resulting fundamental frequency reactance the zone is not allowed to over-reach.

The degree of compensation C in figure 116 has to be interpreted as the relation between series capacitor reactance X_C and the total positive sequence reactance X1 to the driving source to the fault. If only the line reactance is used the degree of compensation will be too high and the zone 1 reach unnecessary reduced. The highest degree of compensation will occur at three phase fault and therefore the calculation need only to be performed for three phase faults.

The compensation degree in ground return path is different than in phases. It is for this reason possible to calculate a compensation degree separately for the phase-to-phase and three-phase faults on one side and for the single phase-to-ground fault loops on the other side. Different settings of the reach for the ph-ph faults and ph-G loops makes it possible to minimise the necessary decrease of the reach for different types of faults.

Reactive Reach

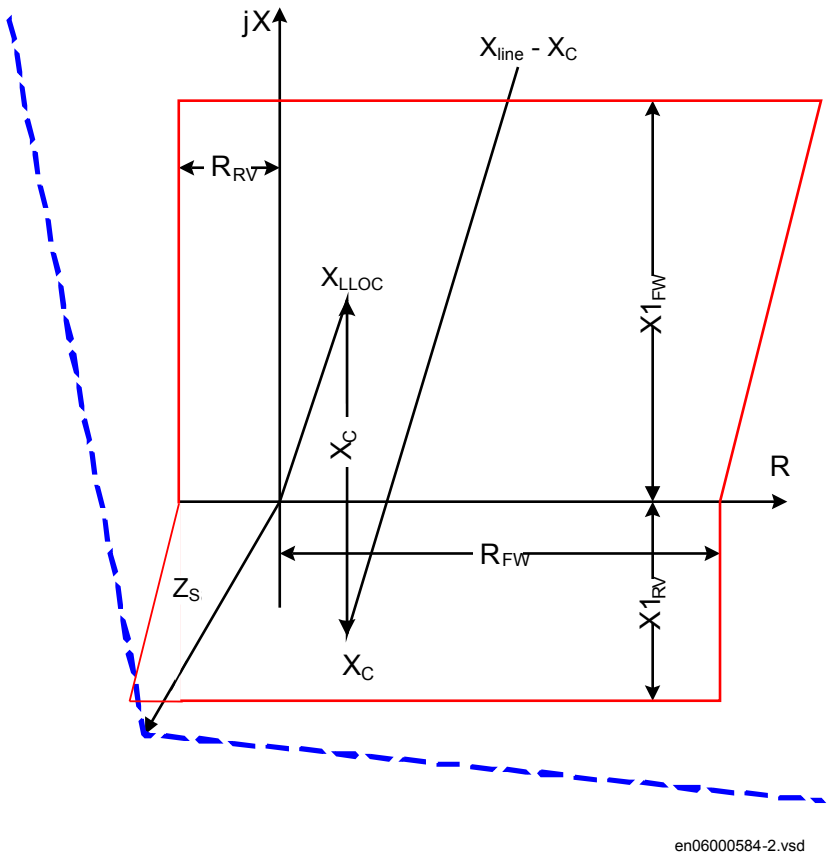

Figure 236: Measured impedance at voltage inversion

Forward direction:

Where

X_{LLoc}	equals line reactance up to the series capacitor(in the picture approximate 33% of XLine)
$X1_{Fw}$	is set to (XLine-X_C) · p/100.
$X1_{Rv}$ = max(1.5 x (X_C-X_{LLOC}C); $X1_{Fw}$	is defined according to figure 116

When the calculation of *X1Fw*gives a negative value the zone 1 must be permanently blocked.

For protection on non compensated lines facing series capacitor on next line. The setting is thus:

- *X1Fw* is set to (XLine-XC · K) · p/100.
- *X1Rv*can be set to the same value as *X1Fw*
- *K* equals side infeed factor at next busbar.

When the calculation of *X1Fw*gives a negative value the zone 1 must be permanently blocked.

Fault resistance

The resistive reach is, for all affected applications, restricted by the set reactive reach and the load impedance and same conditions apply as for a non-compensated network.

However, special notice has to be taken during settings calculations due to the ZnO because 50% of capacitor reactance appears in series with resistance, which corresponds to approximately 36% of capacitor reactance when the line current equals two times the protective current level. This information has high importance for setting of distance protection IED reach in resistive direction, for phase to ground- fault measurement as well as, for phase-to-phase measurement.

Overreaching zone 2

In series compensated network where independent tripping zones will have reduced reach due to the negative reactance in the capacitor and the sub-harmonic swinging the tripping will to a high degree be achieved by the communication scheme.

With the reduced reach of the under-reaching zones not providing effective protection for all faults along the length of the line, it becomes essential to provide over-reaching schemes like permissive overreach transfer trip (POTT) or blocking scheme can be used.

Thus it is of great importance that the zone 2 can detect faults on the whole line both with the series capacitor in operation and when the capacitor is bridged (short circuited). It is supposed also in this case that the reactive reach for phase-to-phase and for phase-to-ground faults is the same. The X1Fw, for all lines affected by the series capacitor, are set to:

- *X1* >= 1,5 · XLine

The safety factor of 1.5 appears due to speed requirements and possible under reaching caused by the sub harmonic oscillations.

The increased reach related to the one used in non compensated system is recommended for all protections in the vicinity of series capacitors to compensate for delay in the operation caused by the sub harmonic swinging.

Settings of the resistive reaches are limited according to the minimum load impedance.

Reverse zone

The reverse zone that is normally used in the communication schemes for functions like fault current reversal logic, weak-in-feed logic or issuing carrier send in blocking scheme must detect all faults in the reverse direction which is detected in the opposite IED by the overreaching zone 2. The maximum reach for the protection in the opposite IED can be achieved with the series capacitor in operation.

The reactive reach can be set according to the following formula:
$X1=1.3\cdot(X1_{2Rem}-0.5(X1_L-X_C))$

Settings of the resistive reaches are according to the minimum load impedance:

Optional higher distance protection zones

When some additional distance protection zones (zone 4, for example) are used they must be set according to the influence of the series capacitor.

7.13.4.6 Setting of zones for parallel line application

Parallel line in service – Setting of zone 1

With reference to section "Parallel line applications", the zone reach can be set to 85% of the protected line.

However, influence of mutual impedance has to be taken into account.

Parallel line in service – setting of zone 2

Overreaching zones (in general, zones 2 and 3) must overreach the protected circuit in all cases. The greatest reduction of a reach occurs in cases when both parallel circuits are in service with a single phase-to-ground fault located at the end of a protected line. The equivalent zero sequence impedance circuit for this case is equal to the one in figure 128.

The components of the zero sequence impedance for the overreaching zones must be equal to at least:

$$R_{0E} = R_0 + R_{m0}$$

(Equation 403)

$$X_{0E} = X_0 + X_{m0}$$

(Equation 404)

Check the reduction of a reach for the overreaching zones due to the effect of the zero sequence mutual coupling. The reach is reduced for a factor:

$$K0 = 1 - \frac{Z0_m}{2 \cdot Z1 + Z0 + R_f}$$

(Equation 405)

If the denominator in equation 152 is called B and Z0m is simplified to X0m, then the real and imaginary part of the reach reduction factor for the overreaching zones can be written as:

$$\mathrm{Re}\left(\overline{K}0\right) = 1 - \frac{X0m \cdot \mathrm{Re}\left(B\right)}{\mathrm{Re}\left(B\right)^2 + \mathrm{Im}\left(B\right)^2}$$

(Equation 406)

$$\mathrm{Im}\left(\overline{K}0\right) = \frac{X0m \cdot \mathrm{Im}\left(B\right)}{\mathrm{Re}\left(B\right)^2 + \mathrm{Im}\left(B\right)^2}$$

(Equation 407)

Parallel line is out of service and grounded in both ends

Apply the same measures as in the case with a single set of setting parameters. This means that an underreaching zone must not overreach the end of a protected circuit for the single phase-to-ground faults.

Set the values of the corresponding zone (zero-sequence resistance and reactance) equal to:

$$R_{0E} = R_0 \cdot \left(1 + \frac{X_{m0}^2}{R_0^2 + X_0^2}\right)$$

(Equation 408)

$$X_{0E} = X_0 \cdot \left(1 - \frac{X_{m0}^2}{R_0^2 + X_0^2}\right)$$

(Equation 409)

7.13.4.7 Setting of reach in resistive direction

Set the resistive reach *R1* independently for each zone.

Set separately the expected fault resistance for phase-to-phase faults *RFPP* and for the phase-to-ground faults *RFPG* for each zone. For each distance zone, set all remaining reach setting parameters independently of each other.

The final reach in resistive direction for phase-to-ground fault loop measurement automatically follows the values of the line-positive and zero-sequence resistance, and at the end of the protected zone is equal to equation 157.

$$R = \frac{1}{3}\left(2 \cdot R1 + R0\right) + RFPG$$

(Equation 410)

$$\varphi loop = \arctan\left[\frac{2 \cdot X1 + X0}{2 \cdot R1 + R0}\right]$$

(Equation 411)

Setting of the resistive reach for the underreaching zone 1 should follow the condition to minimize the risk for overreaching:

$$RFPG \leq 4.5 \cdot X1$$

(Equation 412)

The fault resistance for phase-to-phase faults is normally quite low, compared to the fault resistance for phase-to-ground faults. To minimize the risk for overreaching, limit the setting of the zone 1 reach in resistive direction for phase-to-phase loop measurement to:

$$RFPP \leq 6 \cdot X1$$

(Equation 413)

Note that *RLdFwd* and *RldRev* are not only defining the load encroachment boundary. They are used internally as reference points to improve the performance of the phase selection. In addition, they define the impedance area where the phase selection element gives indications, so do not set RLdFwd and RldRev to excessive values even if the load encroachment functionality is not needed (that is, when the load is not encroaching on the distance zones). Always define the load encroachment boundary according to the actual load or in consideration of how far the phase selection must actually reach.

7.13.4.8 Load impedance limitation, without load encroachment function

The following instructions are valid when setting the resistive reach of the distance zone itself with a sufficient margin towards the maximum load, that is, without the common load encroachment characteristic (set by *RLdFwd*, *RldRev* and *ArgLd*). Observe that even though the zones themselves are set with a margin, *RLdFwd* and *RldRev* still have to be set according to maximum load for the phase selection to achieve the expected performance.

Check the maximum permissible resistive reach for any zone to ensure that there is a sufficient setting margin between the boundary and the minimum load impedance. The minimum load impedance (Ω/phase) is calculated as:

$$Z_{load\,min} = \frac{V^2}{S}$$

(Equation 414)

Where:

V is the minimum phase-to-phase voltage in kV

S is the maximum apparent power in MVA.

The load impedance [Ω/phase] is a function of the minimum operation voltage and the maximum load current:

$$Z_{load} = \frac{V_{min}}{\sqrt{3} \cdot I_{max}}$$

(Equation 415)

Minimum voltage V_{min} and maximum current I_{max} are related to the same operating conditions. Minimum load impedance occurs normally under emergency conditions.

To avoid load encroachment for the phase-to-ground measuring elements, the set resistive reach of any distance protection zone must be less than 80% of the minimum load impedance.

$$RFPG \leq 0.8 \cdot Z_{load}$$

(Equation 416)

This equation is applicable only when the loop characteristic angle for the single phase-to-ground faults is more than three times as large as the maximum expected load-impedance angle. For the case when the loop characteristic angle is less than three

times the load-impedance angle, more accurate calculations are necessary according to equation 164.

$$RFPG \le 0.8 \cdot Z_{load\,\min} \cdot \left[\cos\partial - \frac{2 \cdot R1 + R0}{2 \cdot X1 + X0} \cdot \sin\partial \right]$$

(Equation 417)

Where:

ϑ is a maximum load-impedance angle, related to the maximum load power.

To avoid load encroachment for the phase-to-phase measuring elements, the set resistive reach of any distance protection zone must be less than 160% of the minimum load impedance.

$$RFPP \le 1.6 \cdot Z_{load}$$

(Equation 418)

Equation 165 is applicable only when the loop characteristic angle for the phase-to-phase faults is more than three times as large as the maximum expected load-impedance angle. More accurate calculations are necessary according to equation 166.

$$RFPP \le 1.6 \cdot Z_{load\,\min} \cdot \left[\cos\vartheta - \frac{R1}{X1} \cdot \sin\vartheta \right]$$

(Equation 419)

All this is applicable for all measuring zones when no Power swing detection function ZMRPSB (78) is activated in the IED. Use an additional safety margin of approximately 20% in cases when a ZMRPSB (78) function is activated in the IED, refer to the description of Power swing detection function ZMRPSB (78).

7.13.4.9 Zone reach setting higher than minimum load impedance

The impedance zones are enabled as soon as the (symmetrical) load impedance crosses the vertical boundaries defined by *RLdFwd* and *RldRev* or the lines defined by *ArgLd*. So, it is necessary to consider some margin. It is recommended to set *RLdFwd* and *RldRev* to 90% of the per-phase resistance that corresponds to maximum load.

The absolute value of the margin to the closest *LdAngle* line should be of the same order, that is, at least 0.1 • $Z_{load\ min}$.

The load encroachment settings are related to a per-phase load impedance in a symmetrical star-coupled representation. For symmetrical load or three-phase and phase-to-phase faults, this corresponds to the per-phase, or positive-sequence, impedance. For a phase-to-ground fault, it corresponds to the per-loop impedance, including the ground return impedance.

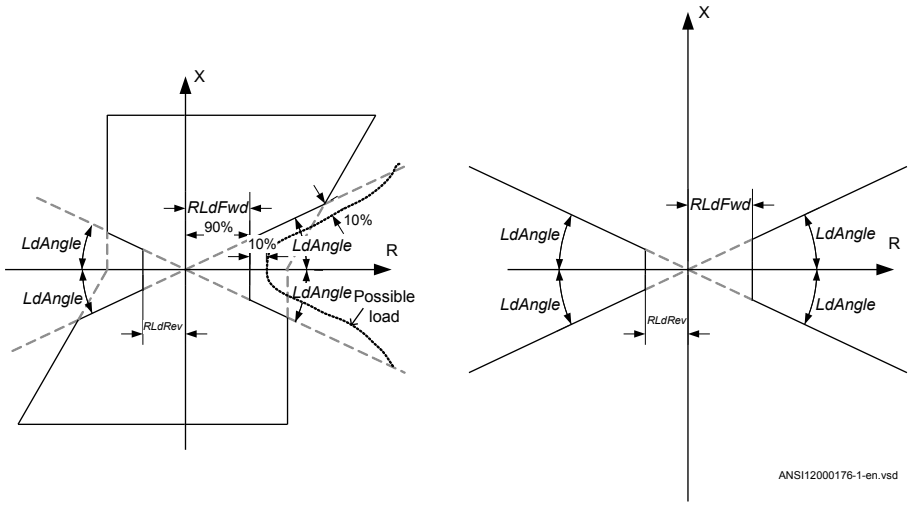

Figure 237: Load impedance limitation with load encroachment

During the initial current change for phase-to-phase and for phase-to-ground faults, operation may be allowed also when the apparent impedance of the load encroachment element is located in the load area. This improves the dependability for fault at the remote end of the line during high load. Although it is not associated to any standard event, there is one potentially hazardous situation that should be considered. Should one phase of a parallel circuit open a single pole, even though there is no fault, and the load current of that phase increase, there is actually no way of distinguish this from a real fault with similar characteristics. Should this accidental event be given precaution, the phase-to-ground reach (RFPG) of all instantaneous zones has to be set below the emergency load for the pole-open situation. Again, this is only for the application where there is a risk that one breaker pole would open without a preceding fault. If this never happens, for example when there is no parallel circuit, there is no need to change any phase-to-ground reach according to the pole-open scenario.

7.13.4.10 Parameter setting guidelines

IMinOpPG and *IMinOpPP*

The ability for a specific loop and zone to issue start or trip is inhibited if the magnitude of the input current for this loop falls below the threshold value defined by these settings. The output of a phase-to-ground loop n is blocked if In < *IMinOpPGZRV*(Zx). In is the RMS value of the fundamental current in phase n.

The output of a phase-to-phase loop mn is blocked if Imn < *IMinOpPP*(Zx). Imn is the RMS value of the vector difference between phase currents m and n.

Both current limits *IMinOpPG* and *IMinOpPP* are automatically reduced to 75% of regular set values if the zone is set to operate in reverse direction, that is, *OperationDir=Reverse*.

OpModeZx

These settings allow control over the operation/non-operation of the individual distance zones. Normally the option '*Enable Ph-G PhPh*' is active, to allow operation of both phase-to-phase and phase-to-ground loops. Operation in either phase-to-phase or phase-to-ground loops can be chosen by activating '*Enable PhPh* or *Enable Ph-G*, respectively. The zone can be completely disabled with the setting option *Disable-Zone*.

DirModeZx

These settings define the operating direction for Zones Z3, Z4 and Z5 (the directionality of zones Z1, Z2 and ZRV is fixed). The options are *Non-directional*, *Forward* or *Reverse*. The result from respective set value is illustrated in figure 198 below, where positive impedance corresponds to the direction out on the protected line.

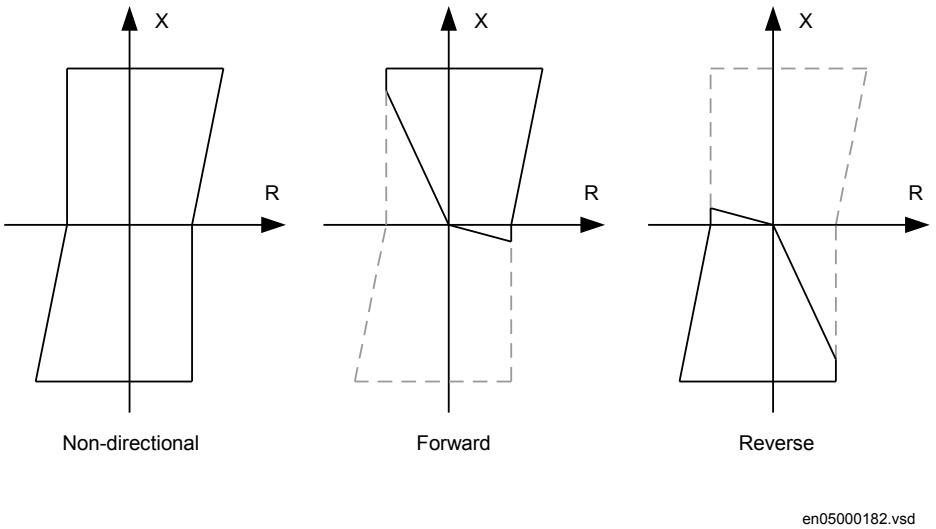

Figure 238: Directional operating modes of the distance measuring zones 3 to 5

tPPZx, *tPGZx*, *TimerModeZx*, *ZoneLinkPU* and *TimerLinksZx*

Refer to chapter Simplified logic schemes in Technical Manual for the application of these settings.

OperationSC

Choose the setting value *SeriesComp* if the protected line or adjacent lines are compensated with series capacitors. Otherwise maintain the *NoSeriesComp* setting value.

CVTtype

If possible, the type of capacitive voltage transformer (CVT) that is used for measurement should be identified. Note that the alternatives are strongly related to the type of ferro-resonance suppression circuit that is included in the CVT. There are two main choices:

Passive type	For CVTs that use a non-linear component, like a saturable inductor, to limit overvoltages (caused by ferro-resonance). This component is practically idle during normal load and fault conditions, hence the name ‘passive’. CVTs that have a high resistive burden to mitigate ferro-resonance also fall in to this category.
Any	This option is primarily related to the so-called active type CVT, which uses a set of reactive components to form a filter circuit that essentially attenuates frequencies other than the nominal in order to restrain the ferro-resonance. The name ‘active’ refers to the fact that this circuit is always involved during transient conditions, regardless of voltage level. This option should also be used for types that do not fall under the other two categories, for example, CVTs with power electronic damping devices, or if the type cannot be identified at all.
None (Magnetic)	This option should be selected if the voltage transformer is fully magnetic.

3I0Enable_PG

This setting opens up an opportunity to enable phase-to-ground measurement for phase-to-phase-ground faults. It determines the level of residual current (3I0) above which phase-to-ground measurement is activated (and phase-to-phase measurement is blocked). The relations are defined by the following equation.

$$\left|3 \cdot I_0\right| \geq \frac{I3I0Enable\_PG}{100} \cdot I_{ph\,max}$$

(Equation 420)

Where:

3I0Enable_PG	is the setting for the minimum residual current needed to enable operation in the phase-to-ground fault loops in %
Iphmax	is the maximum phase current in any of three phases

By default this setting is set excessively high to always enable phase-to-phase measurement for phase-to-phase-ground faults. Maintain this default setting value unless there are very specific reasons to enable phase-to-ground measurement. Please note that, even with the default setting value, phase-to-ground measurement is activated whenever appropriate, like in the case of simultaneous faults: two ground faults at the same time, one each on the two circuits of a double line.

7.14 Power swing detection ZMRPSB (68)

7.14.1 Identification

Function description	IEC 61850 identification	IEC 60617 identification	ANSI/IEEE C37.2 device number
Power swing detection	ZMRPSB	*Zpsb*	68

7.14.2 Application

7.14.2.1 General

Various changes in power system may cause oscillations of rotating units. The most typical reasons for these oscillations are big changes in load or changes in power system configuration caused by different faults and their clearance. As the rotating masses strive to find a stable operate condition, they oscillate with damped oscillations until they reach the final stability.

The extent of the oscillations depends on the extent of the disturbances and on the natural stability of the system.

The oscillation rate depends also on the inertia of the system and on the total system impedance between different generating units. These oscillations cause changes in phase and amplitude of the voltage difference between the oscillating generating units in the power system, which reflects further on in oscillating power flow between two parts of the system - the power swings from one part to another - and vice versa.

Distance IEDs located in interconnected networks see these power swings as the swinging of the measured impedance in relay points. The measured impedance varies with time along a locus in an impedance plane, see figure 239. This locus can enter the operating characteristic of a distance protection and cause, if no preventive measures have been considered, its unwanted operation.

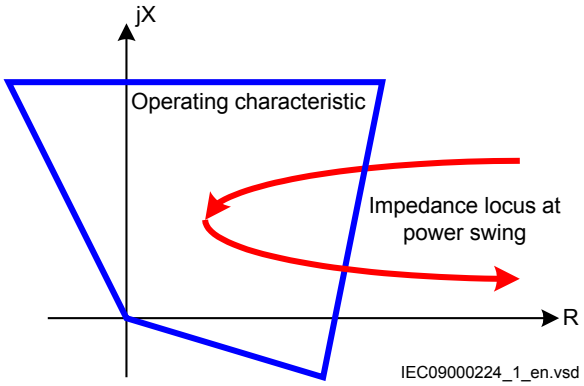

Figure 239: Impedance plane with Power swing detection operating characteristic and impedance locus at power swing

7.14.2.2 Basic characteristics

Power swing detection function (ZMRPSB, 78) detects reliably power swings with periodic time of swinging as low as 200 ms (which means slip frequency as high as 10% of the rated frequency on the 50 Hz basis). It detects the swings under normal system operate conditions as well as during dead time of a single-pole automatic reclosing cycle.

ZMRPSB (78) function is able to secure selective operation for internal faults during power. The operation of the distance protection function remains stable for external faults during the power swing condition, even with the swing (electrical) centre located on the protected power line.

The operating characteristic of the ZMRPSB (78) function is easily adjustable to the selected impedance operating characteristics of the corresponding controlled distance protection zones as well as to the maximum possible load conditions of the protected power lines. See the corresponding description in *"Technical reference manual"* for the IEDs.

7.14.3 Setting guidelines

Setting guidelines are prepared in the form of a setting example for the protected power line as part of a two-machine system presented in figure 240.

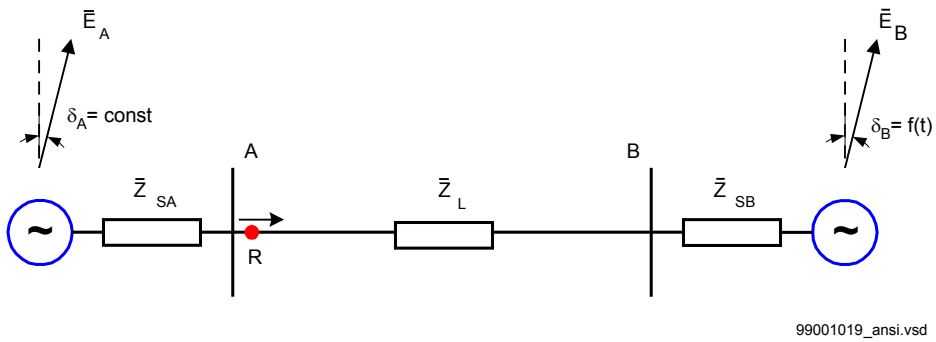

Figure 240: Protected power line as part of a two-machine system

Reduce the power system with protected power line into equivalent two-machine system with positive sequence source impedances Z_{SA} behind the IED and Z_{SB} behind the remote end bus B. Observe a fact that these impedances can not be directly calculated from the maximum three-phase short circuit currents for faults on the corresponding busbar. It is necessary to consider separate contributions of different connected circuits.

The required data is as follows:

$V_r = 400kV$	Rated system voltage
$V_{\min} = 380kV$	Minimum expected system voltage under critical system conditions
$f_n = 60Hz$	Rated system frequency
$V_p = \frac{400}{\sqrt{3}} kV$	Rated primary voltage of voltage protection transformers used
$V_s = \frac{0.115}{\sqrt{3}} kV$	Rated secondary voltage of voltage instrument transformers used
$I_p = 1200A$	Rated primary current of current protection transformers used
$I_s = 5A$	Rated secondary current of current protection transformers used

Table continues on next page

$\overline{Z}_{L1} = (10.71 + j75.6)\Omega$	Line positive sequence impedance
$\overline{Z}_{SA1} = (1.15 + j43.5)\Omega$	Positive sequence source impedance behind A bus
$\overline{Z}_{SB1} = (5.3 + j35.7)\Omega$	Positive sequence source impedance behind B bus
$S_{\max} = 1000 MVA$	Maximum expected load in direction from A to B (with minimum system operating voltage V_{min})
$\cos(\varphi_{\max}) = 0.95$	Power factor at maximum line loading
$\varphi_{\max} = 25°$	Maximum expected load angle
$f_{si} = 2.5 Hz$	Maximum possible initial frequency of power oscillation
$f_{sc} = 7.0 Hz$	Maximum possible consecutive frequency of power oscillation

The impedance transformation factor, which transforms the primary impedances to the corresponding secondary values is calculated according to equation 421. Consider a fact that all settings are performed in primary values. The impedance transformation factor is presented for orientation and testing purposes only.

$$KIMP = \frac{I_p}{I_s} \cdot \frac{V_s}{V_p} = \frac{1200}{5} \cdot \frac{0.115}{400} = 0.069$$

(Equation 421)

The minimum load impedance at minimum expected system voltage is equal to equation 422.

$$\left|\overline{Z}_{L\min}\right| = \frac{V^2{}_{\min}}{S_{\max}} = \frac{380^2}{1000} = 144.4\Omega$$

(Equation 422)

The minimum load resistance R_{Lmin} at maximum load and minimum system voltage is equal to equation 423.

$$R_{L\min} = \left|\bar{Z}_{L\min}\right| \cdot \cos\left(\varphi_{\max}\right) = 144.4 \cdot 0.95 = 137.2\Omega$$

(Equation 423)

The system impedance Z_S is determined as a sum of all impedance in an equivalent two-machine system, see figure 240. Its value is calculated according to equation 424.

$$\bar{Z}_S = \bar{Z}_{SA1} + \bar{Z}_{L1} + \bar{Z}_{SB1} = \left(17.16 + j154.8\right)\Omega$$

(Equation 424)

The calculated value of the system impedance is of informative nature and helps determining the position of oscillation center, see figure 241, which is for general case calculated according to equation 425.

$$\bar{Z}_{CO} = \frac{\bar{Z}_S}{1 + \frac{\left|\bar{E}_B\right|}{\left|\bar{E}_A\right|}} - \bar{Z}_{SA1}$$

(Equation 425)

In particular cases, when

$$\left|\bar{E}_A\right| = \left|\bar{E}_B\right|$$

(Equation 426)

resides the center of oscillation on impedance point, see equation 427.

$$\bar{Z}_{CO} = \frac{\bar{Z}_S}{2} - \bar{Z}_{SA1} = \left(7.43 + j33.9\right)\Omega$$

(Equation 427)

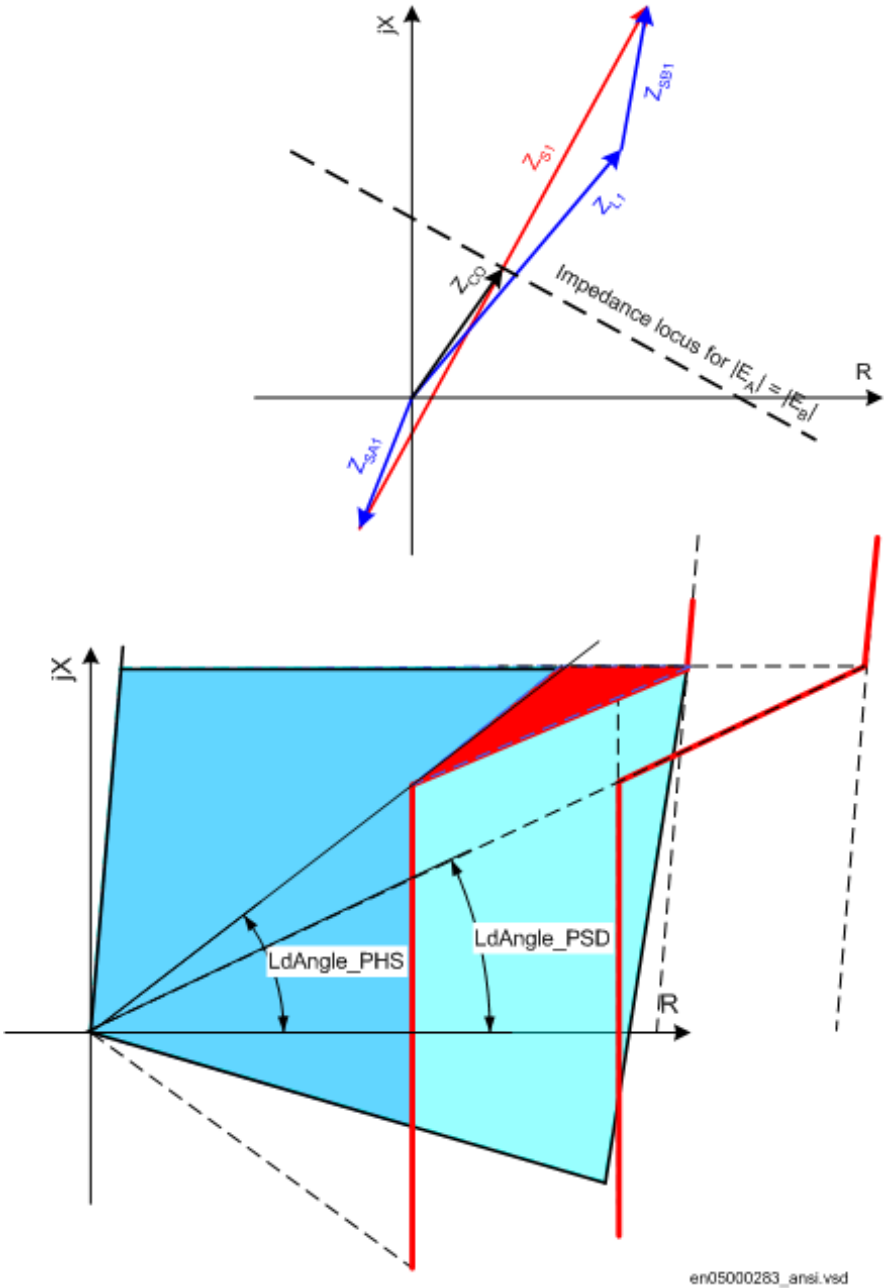

Figure 241: Impedance diagrams with corresponding impedances under consideration

The outer boundary of oscillation detection characteristic in forward direction *RLdOutFw* should be set with certain safety margin K_L compared to the minimum expected load resistance R_{Lmin}. When the exact value of the minimum load resistance

is not known, the following approximations may be considered for lines with rated voltage 400 kV:

- K_L = 0.9 for lines longer than 100 miles
- K_L = 0.85 for lines between 50 and 100 miles
- K_L = 0.8 for lines shorter than 50 miles

Multiply the required resistance for the same safety factor K_L with the ratio between actual voltage and 400kV when the rated voltage of the line under consideration is higher than 400kV. The outer boundary *RLdOutFw* obtains in this particular case its value according to equation 428.

$$RLdOutFw = K_L \cdot R_{L\min} = 0.9 \cdot 137.2 = 123.5\Omega$$

(Equation 428)

It is a general recommendation to set the inner boundary *RLdInFw* of the oscillation detection characteristic to 80% or less of its outer boundary. Exceptions are always possible, but must be considered with special care especially when it comes to settings of timers *tP1* and *tP2* included in oscillation detection logic. This requires the maximum permitted setting values of factor *kLdRFw* = 0.8. Equation 429 presents the corresponding maximum possible value of *RLdInFw*.

$$RLdInFw = kLdRFw \cdot RLdOutFw = 98.8\Omega$$

(Equation 429)

The load angles, which correspond to external δ_{Out} and internal δ_{In} boundary of proposed oscillation detection characteristic in forward direction, are calculated with sufficient accuracy according to equation 430 and 431 respectively.

$$\delta_{Out} = 2 \cdot \arctan\left(\frac{|\bar{Z}_S|}{2 \cdot RLdOutFw}\right) = 2 \cdot \arctan\left(\frac{155.75}{2 \cdot 123.5}\right) = 64.5°$$

(Equation 430)

$$\delta_{In} = 2 \cdot \arctan\left(\frac{|\bar{Z}_S|}{2 \cdot RLdInFw_{\max}}\right) = 2 \cdot \arctan\left(\frac{155.75}{2 \cdot 98.8}\right) = 76.5°$$

(Equation 431)

The required setting *tP1* of the initial oscillation detection timer depends on the load angle difference according to equation 432.

$$tP1 = \frac{\delta_{In} - \delta_{Out}}{f_{si} \cdot 360°} = \frac{76.5° - 64.5°}{2.5 \cdot 360°} = 13.3ms$$

(Equation 432)

The general tendency should be to set the *tP1* time to at least 30 ms, if possible. Since it is not possible to further increase the external load angle δ_{Out}, it is necessary to reduce the inner boundary of the oscillation detection characteristic. The minimum required value is calculated according to the procedure listed in equation 433, 434, 435 and 436.

$$tP1_{\min} = 30ms$$

(Equation 433)

$$\delta_{In-\min} = 360° \cdot f_{si} \cdot tP1_{\min} + \delta_{Out} = 360° \cdot 2.5 \cdot 0.030 + 64.5° = 91.5°$$

(Equation 434)

$$RLdInFw_{\max 1} = \frac{\left|\bar{Z}_S\right|}{2 \cdot \tan\left(\frac{\delta_{in-\min}}{2}\right)} = \frac{155.75}{2 \cdot \tan\left(\frac{91.5}{2}\right)} = 75.8\Omega$$

(Equation 435)

$$kLdRFw = \frac{RLdInFw_{\max 1}}{RLdOutFw} = \frac{75.8}{123.5} = 0.61$$

(Equation 436)

Also check if this minimum setting satisfies the required speed for detection of consecutive oscillations. This requirement will be satisfied if the proposed setting of *tP2* time remains higher than 10 ms, see equation 437.

$$tP2_{\max} = \frac{\delta_{In} - \delta_{Out}}{f_{sc} \cdot 360°} = \frac{91.5° - 64.5°}{7 \cdot 360°} = 10.7ms$$

(Equation 437)

The final proposed settings are as follows:

RLdOutFw = 123.5Ω

kLdRFw = 0.61

tP1 = 30 ms

tP2 = 10 ms

Consider RLdInFw = 75.0Ω.

Do not forget to adjust the setting of load encroachment resistance *RLdFwd* in Phase selection with load encroachment (FDPSPDIS, 21 or FRPSPDIS, 21) to the value equal to or less than the calculated value RLdInFw. It is at the same time necessary to adjust the load angle in FDPSPDIS (21) or FRPSPDIS (21) to follow the condition presented in equation 438.

Index PHS designates correspondence to FDPSPDIS (21) or FRPSPDIS (21) function and index PSD the correspondence to ZMRPSB (68) function.

$$LdAngle_{PHS} \geq \arctan\left[\frac{\tan(LdAngle_{PSD})}{KLdRFw}\right]$$

(Equation 438)

Consider equation 439,

$$LdAngle_{PSD} = \varphi_{\max} = 25°$$

(Equation 439)

then it is necessary to set the load angle in FDPSPDIS (21) or FRPSPDIS (21) function to not less than equation 440.

$$\mathrm{LdAngle}_{\mathrm{PHS}} \geq \arctan\left[\frac{\tan(\mathrm{LdAngle}_{\mathrm{PSD}})}{\mathrm{kLdRFw}}\right] = \arctan\left[\frac{\tan(25°)}{0.61}\right] = 37.5°$$

(Equation 440)

It is recommended to set the corresponding resistive reach parameters in reverse direction (*RLdOutRv* and *kLdRRv*) to the same values as in forward direction, unless the system operating conditions, which dictate motoring and generating types of oscillations, requires different values. This decision must be made on basis of possible system contingency studies especially in cases, when the direction of transmitted power may change fast in short periods of time. It is recommended to use different setting groups for operating conditions, which are changing only between different periods of year (summer, winter).

System studies should determine the settings for the hold timer *tH*. The purpose of this timer is, to secure continuous output signal from Power swing detection function (ZMRPSB, 68) during the power swing, even after the transient impedance leaves ZMRPSB (68) operating characteristic and is expected to return within a certain time due to continuous swinging. Consider the minimum possible speed of power swinging in a particular system.

The *tR1* inhibit timer delays the influence of the detected residual current on the inhibit criteria for ZMRPSB(68). It prevents operation of the function for short transients in the residual current measured by the IED.

The *tR2* inhibit timer disables the output PICKUP signal from ZMRPSB (68) function, if the measured impedance remains within ZMRPSB (68) operating area for a time longer than the set *tR2* value. This time delay was usually set to approximately two seconds in older power-swing devices.

The setting of the *tGF* timer must cover, with sufficient margin, the opening time of a circuit breaker and the dead-time of a single-phase autoreclosing together with the breaker closing time.

7.15 Power swing logic PSLPSCH

7.15.1 Identification

Function description	IEC 61850 identification	IEC 60617 identification	ANSI/IEEE C37.2 device number
Power swing logic	PSLPSCH	-	-

7.15.2 Application

Power Swing Logic (PSLPSCH) is a complementary function to Power Swing Detection (ZMRPSB, 68) function. It enables a reliable fault clearing for different faults on protected lines during power swings in power systems.

It is a general goal, to secure fast and selective operation of the distance protection scheme for the faults, which occur on power lines during power swings. It is possible to distinguish between the following main cases:

- A fault occurs on a so far healthy power line, over which the power swing has been detected and the fast distance protection zone has been blocked by ZMRPSB (68) element.
- The power swing occurs over two phases of a protected line during the dead time of a singlepole auto-reclosing after the Ph-E fault has been correctly cleared by the distance protection. The second fault can, but does not need to, occur within this time interval.
- Fault on an adjacent line (behind the B substation, see figure 242) causes the measured impedance to enter the operate area of ZMRPSB (68) function and, for example, the zone 2 operating characteristic (see figure 243). Correct fault clearance initiates an evolving power swing so that the locus of the measured impedance continues through zone 1 operating characteristic and causes its unwanted operation, if no preventive measures have been taken, see figure 243.

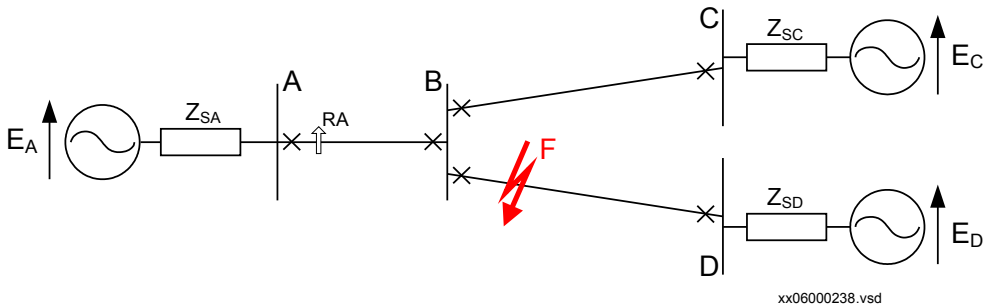

Figure 242: Fault on adjacent line and its clearance causes power swinging between sources A and C

PSLPSCH function and the basic operating principle of ZMRPSB (68) function operate reliably for different faults on parallel power lines with detected power swings. It is, however, preferred to keep the distance protection function blocked in cases of single phase-to-ground faults on so far healthy lines with detected power swings. In these cases, it is recommended to use an optionally available directional overcurrent ground-fault protection with scheme communication logic.

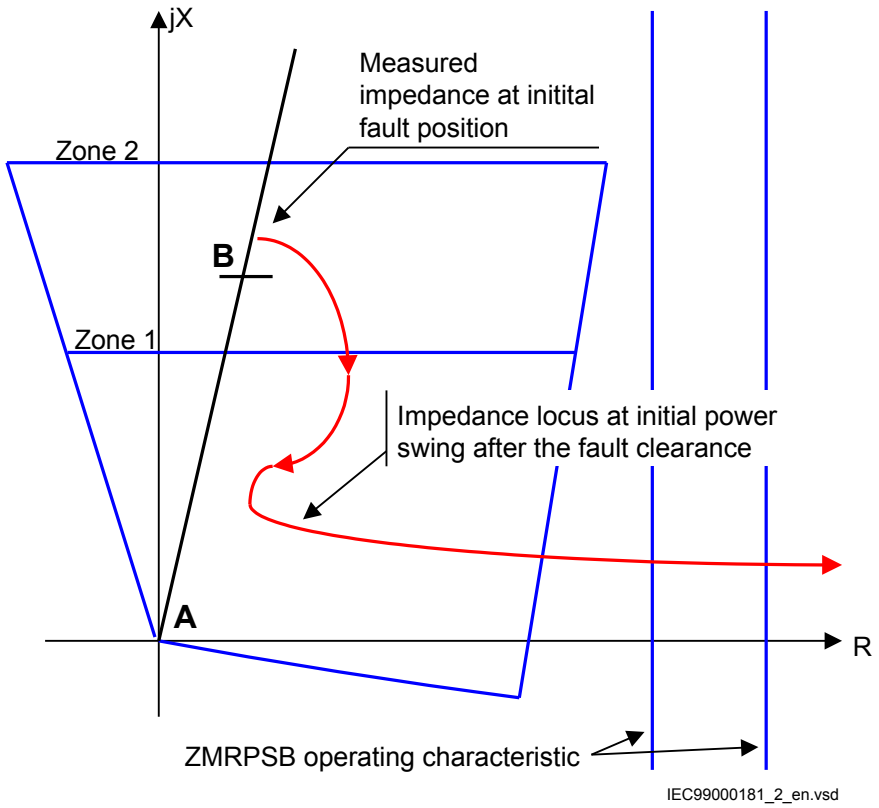

Figure 243: Impedance trajectory within the distance protection zones 1 and 2 during and after the fault on line B – D

7.15.3 Setting guidelines

7.15.3.1 Scheme communication and tripping for faults occurring during power swinging over the protected line

The IED includes generally up to five distance protection zones. It is possible to use one or two of them intentionally for selective fault clearing during power swings only. Following are the basic conditions for the operation of the so called (underreaching and overreaching) power-swing zones:

- They must generally be blocked during normal operation and released during power swings.
- Their operation must be time delayed but shorter (with sufficient margin) than the set time delay of normal distance protection zone 2, which is generally blocked by the power swing.
- Their resistive reach setting must secure, together with the set time delay for their operation, that the slowest expected swings pass the impedance operate area without initiating their operation.

Communication and tripping logic as used by the power swing distance protection zones is schematically presented in figure 244.

The operation of the power swing zones is conditioned by the operation of Power swing detection (ZMRPSB, 68) function. They operate in PUTT or POTT communication scheme with corresponding distance protection zones at the remote line end. It is preferred to use the communication channels over the optionally available “Line Data Communication Module - LDCM” and the “Binary signal transfer to remote end” function. It is also possible to include, in an easy way (by means of configuration possibilities), the complete functionality into regular scheme communication logic for the distance protection function. The communication scheme for the regular distance protection does not operate during the power-swing conditions, because the distance protection zones included in the scheme are normally blocked. The powerswing zones can for this reason use the same communication facilities during the power-swing conditions.

Only one power swing zone is necessary in distance protection at each line terminal, if the POTT communication scheme is applied. One underreaching power swing zone, which sends the time delayed carrier signal, and one overreaching power swing zone, which performs the local tripping condition, are necessary with PUTT schemes.

The operation of the distance protection zones with long time delay (for example, zone 3) is in many cases not blocked by the power swing detection elements. This allows in such cases the distance protection zone 3 (together with the full-scheme design of the distance protection function) to be used at the same time as the overreaching power-swing zone.

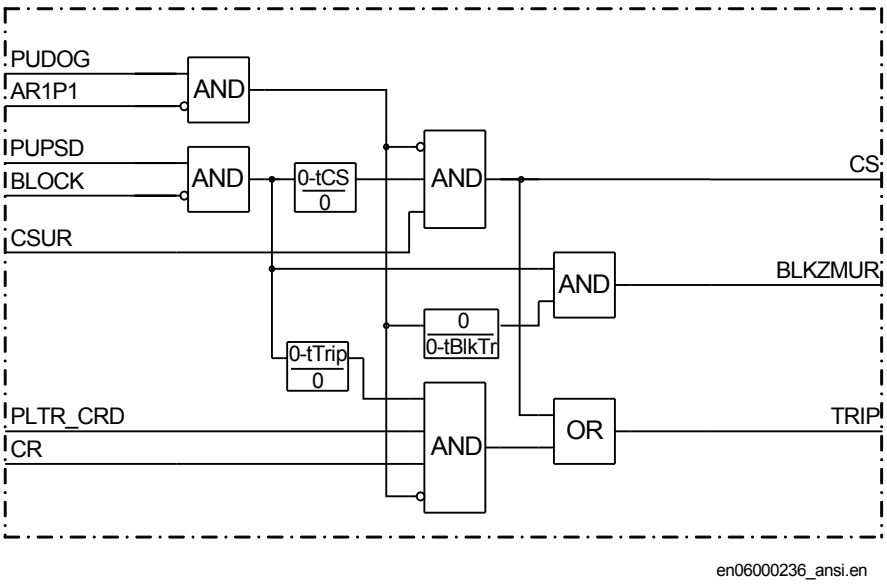

Figure 244: Simplified logic diagram - power swing communication and tripping logic

Configuration

Configure the BLOCK input to any combination of conditions, which are supposed to block the operation of logic. Connection to detected fuse failure conditions is required as a minimum.

The PUDOG functional input should be configured to the PICKUP signal of any line ground fault overcurrent protection function within the IED. When the directional ground fault O/C function is used an OR combination of forward and reverse operation should be used.

Connect the AR1P1 to the output signal of the autoreclosing function, which signals the activation of the single pole autoreclosing dead time.

The PUPSD input should be connected to the pickup signal of the power swing detection (ZMRPSB, 68) function, which becomes active in cases of detected system oscillations.

The CSUR functional input should be connected to the pickup output of the power swing distance protection zone, which is used as a local tripping criteria during power swings in PUTT schemes. When the POTT scheme is used (also on series compensated networks) the local criteria and the carrier sending zone are one and the same. It is preferred to use separate communication facilities for distance protection and for power swing communication logic, but combination of functionality within the same communication channel is possible as well.

The CR signal should be configured to the functional input which provides the logic with information on received carrier signal sent by the remote end power swing distance protection zone.

The CS functional output signal should be configured to either output relay or to corresponding input of the “Binary signal transfer to remote end” function.

The BLKZMPS output signal should be configured to BLOCK input of the power swing distance protection zones.

The TRIP signal should be connected correspondingly towards the tripping functionality of the complete distance protection within the IED.

Setting calculations

Time delay of power swing carrier send distance protection zones

Time delay for the underreaching or overreaching carrier send power swing zone should be set shorter (with sufficient margin) than the time delay of normal distance protection zone 2 to obtain selective time grading also in cases of faults during power swings. The necessary time difference depends mostly on the speed of the communication channel used, speed of the circuit breaker used, etc. Time difference between 100 ms and 150 ms is generally sufficient.

Reactive reach setting of power swing distance protection zones

Set the reactive reach for the power swing zones according to the system selectivity planning. The reach of the underreaching zone should not exceed 85% of the protected line length. The reach of the overreaching zone should be at least 120% of the protected line length.

Resistive reach setting of carrier send power swing distance protection zone

Determine the minimum possible speed of impedance $\Delta Z / \Delta t$ in primary Ω / s of the expected power swings. When better information is not available from system studies, the following equation may be used:

$$v_z = 2 \cdot Z_{L\min} \cdot f_{s\min}$$

(Equation 441)

Where:

v_z is a minimum expected speed of swing impedance in Ω / s

Z_{Lmin} is a minimum expected primary load impedance in Ω

f_{smin} is a minimum expected oscillation (swing) frequency in *Hz*

Calculate the maximum permissible resistive reach for each power swing zone separately according to the following equations.

$$RFPP_n = v_z \cdot tnPP \cdot 0.8$$

(Equation 442)

$$RFPG_n = \frac{V_Z \cdot tnPG}{2} \cdot 0.8$$

(Equation 443)

Here is factor 0.8 considered for safety reasons and:

$RFPG_n$	phase-to-ground resistive reach setting for a power swing distance protection zone n in Ω
$RFPP_n$	phase-to-phase resistive reach setting for a power swing distance protection zone n in Ω
tnPG	time delay for phase-to-ground fault measurement of power swing distance protection zone n in *s*
tnPP	time delay for phase-to-phase fault measurement of power swing distance protection zone n in *s*

Time-delay for the overreaching power swing zone

Time delay for the overreaching power swing zone is not an important parameter, if the zone is used only for the protection purposes at power-swings.

Consider the normal time grading, if the overreaching zone serves as a time delayed back-up zone, which is not blocked by the operation of Power swing detection (ZMRPSB, 68) function.

Timers within the power swing logic

Settings of the timers within Power swing logic (PSLPSCH) depend to a great extent on the settings of other time delayed elements within the complete protection system. These settings differ within different power systems. The recommended settings consider only the general system conditions and the most used practice at different utilities. It is always necessary to check the local system conditions.

The carrier send timer *tCS* is used for safety reasons within the logic. It requires continuous presence of the input signal PUPSD, before it can issue a carrier send signal. A time delay between 50 and 100 ms is generally sufficient.

The trip timer *tTrip* is used for safety reasons within the logic. It requires continuous presence of the input signal PUPSD, before it can issue a tripping command during the power swings. A time delay between 50 and 100 ms is generally sufficient.

The blocking timer *tBlkTr* prolongs the presence of the BLKZMOR output signals, which can be used to block the operation of the power swing zones after the detected single-phase-to-ground faults during the power swings. It is necessary to permit the O/

C EF protection to eliminate the initial fault and still make possible for the power swing zones to operate for possible consecutive faults. A time delay between 150 and 300 ms is generally sufficient.

7.15.3.2 Blocking and tripping logic for evolving power swings

The second part of a complete Power swing logic (PSLPSCH) functionality is a blocking and tripping logic for evolving power swings, see figure 242 and figure 243. The simplified logic is presented in figure 245. The logic controls the operation of the underreaching distance protection zone (Zone 1) at power swings, caused by the faults and their clearance on the adjacent power lines. The logic should generally be configured between distance protection zones 1 and 2.

Configuration

The fault impedance should be detected within the external boundary of Power Swing Detection (ZMRPSB, 68) function without power swing detected during the entire fault duration. Configure for this reason the PUZMPSD to the functional output signal of ZMRPSB (68) function, which indicates the measured impedance within its external boundaries.

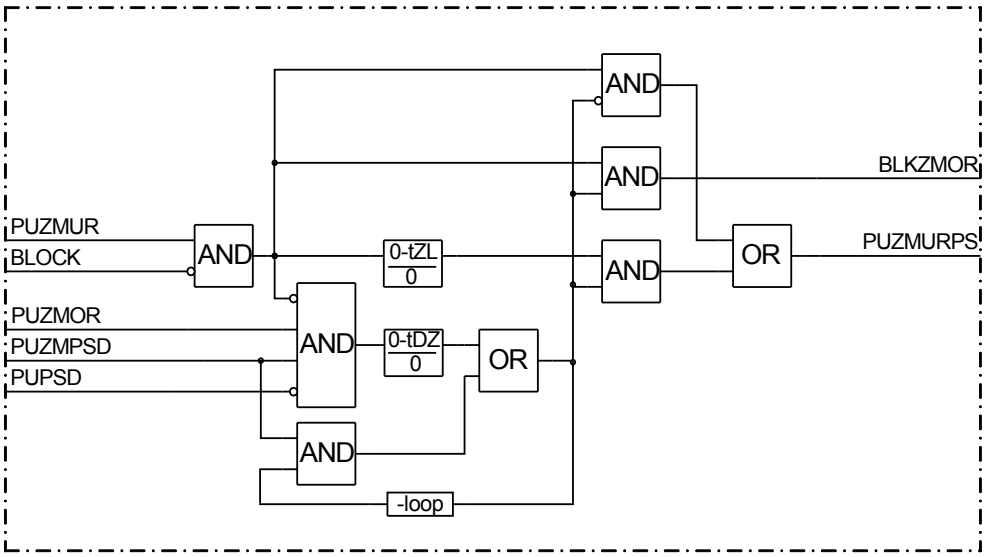

Figure 245: Blocking and tripping logic for evolving power swings

No system oscillation should be detected in power system. Configure for this reason the PUPSD functional input to the PICKUP functional output of ZMRPSB (68) function or to any binary input signal indicating the detected oscillations within the power system.

Configure the functional input PUZMUR to the pickup output of the instantaneous underreaching distance protection zone (usually PICKUP of distance protection zone 1). The function will determine whether the pickup signal of this zone is permitted to be used in further logic or not, dependent on time difference on appearance of overreaching distance protection zone (usually zone 2).

Configure for this reason the functional output signal PUZMURPS to the pickup output of the overreaching distance protection zone (usually PICKUP of distance protection zone 2).

Functional output PUZMLL replaces the pickup (and trip) signals of the distance protection zone 1 in all following logic. Configure it accordingly within the logic.

Functional output signal BLKZMOR should be configured to block the overreach distance protection zone (generally zone 2) in order to prevent its maloperation during the first swinging of the system. Configure it accordingly to BLOCK functional input of distance protection zone 2.

Setting calculations

Setting of the differentiating timer *tDZ* influences to a great extent the performance of the protection during the power swings, which develops by occurrence and clearance of the faults on adjacent power lines. It is necessary to consider the possibility for the faults to occur close to the set reach of the underreaching distance protection zone, which might result in prolonged operate times of zone 1 (underreaching zone) compared to zone 2 pickuped time (overreaching zone). A setting between 80 and 150 ms is generally sufficient.

The release timer *tZL* permits unconditional operation of the underreaching zone, if the measured impedance remains within its operate characteristic longer than the set time *tZL*. Its setting depends on the expected speed of the initial swings and on the setting of the time delay for the overreaching zone 2. The release timer must still permit selective tripping of the distance protection within the complete network. A setting between 200 and 300 ms is generally sufficient.

7.16 Pole slip protection PSPPPAM (78)

7.16.1 Identification

Function description	IEC 61850 identification	IEC 60617 identification	ANSI/IEEE C37.2 device number
Pole slip protection	PSPPPAM	U_{cos}	78

7.16.2 Application

Normally, the generator operates synchronously with the power system, that is, all the generators in the system have the same angular velocity and approximately the same phase angle difference. If the phase angle between the generators gets too large the stable operation of the system cannot be maintained. In such a case the generator loses the synchronism (pole slip) to the external power system.

The situation with pole slip of a generator can be caused by different reasons.

A short circuit occurs in the external power grid, close to the generator. If the fault clearance time is too long, the generator will accelerate so much, so the synchronism cannot be maintained. The relative generator phase angle at a fault and pole slip, relative to the external power system, is shown in figure 246.

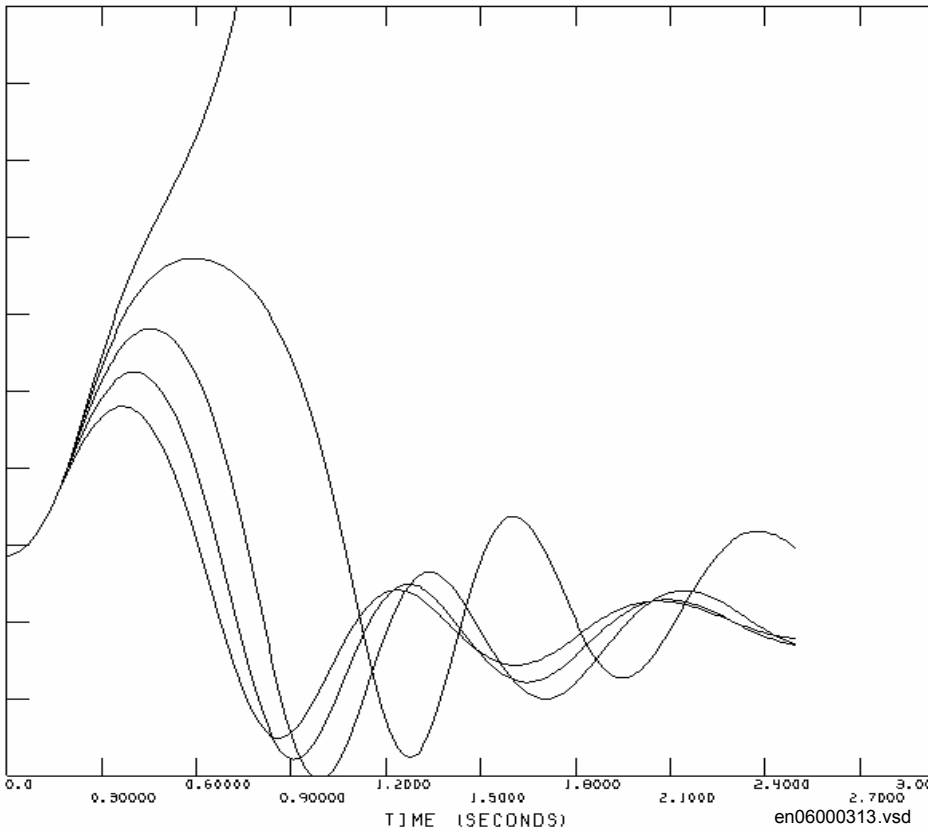

Figure 246: Relative generator phase angle at a fault and pole slip relative to the external power system

The relative angle of the generator is shown for different fault duration at a three-phase short circuit close to the generator. As the fault duration increases the angle swing amplitude increases. When the critical fault clearance time is reached the stability cannot be maintained.

Un-damped oscillations occur in the power system, where generator groups at different locations, oscillate against each other. If the connection between the generators is too weak the amplitude of the oscillations will increase until the angular stability is lost. At the moment of pole slip there will be a centre of this pole slip, which is equivalent with distance protection impedance measurement of a three-phase. If this point is situated in the generator itself, the generator should be tripped as fast as possible. If the locus of the out of step centre is located in the power system outside the generators the power system should, if possible, be split into two parts, and the generators should be kept in service. This split can be made at predefined locations (trip of predefined lines) after function from pole slip protection (PSPPPAM ,78) in the line protection IED.

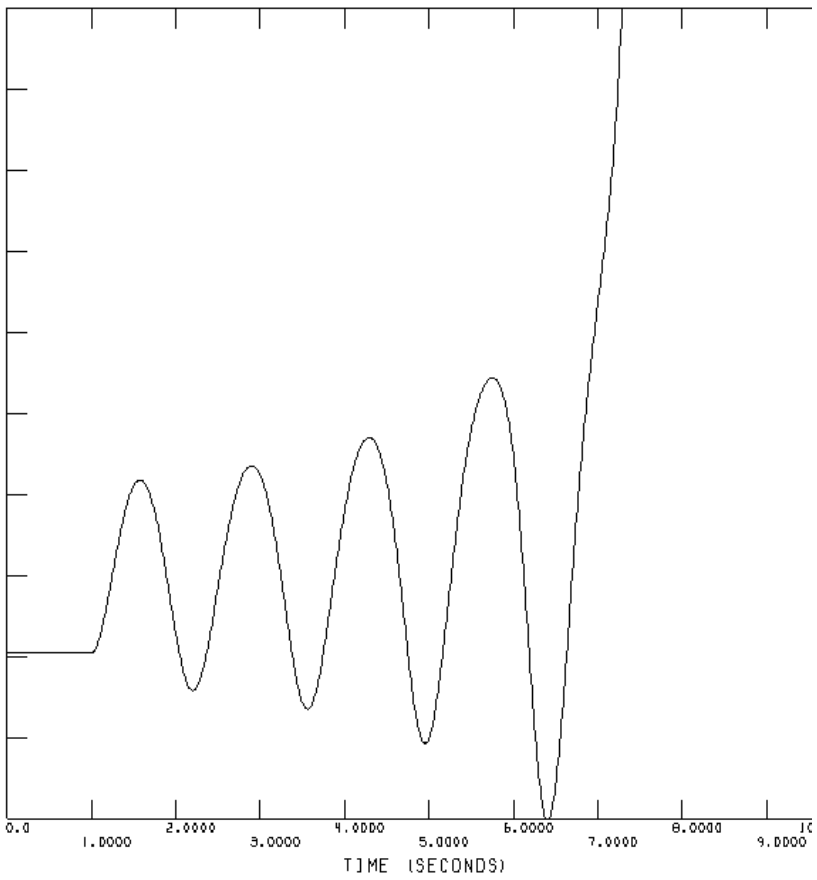

Figure 247: Undamped oscillations causing pole slip

The relative angle of the generator is shown a contingency in the power system, causing un-damped oscillations. After a few periods of the oscillation the swing amplitude gets to large and the stability cannot be maintained.

If the excitation of the generator gets too low there is a risk that the generator cannot maintain synchronous operation. The generator will slip out of phase and operate as an induction machine. Normally the under-excitation protection will detect this state and trip the generator before the pole slip. For this fault the under-excitation protection and PSPPPAM (78) function will give mutual redundancy.

The operation of a generator having pole slip will give risk of damages to the generator block.

- At each pole slip there will be significant torque impact on the generator-turbine shaft.
- In asynchronous operation there will be induction of currents in parts of the generator normally not carrying current, thus resulting in increased heating. The consequence can be damages on insulation and stator/rotor iron.
- At asynchronous operation the generator will absorb a significant amount of reactive power, thus risking overload of the windings.

PSPPPAM (78) function shall detect out of step conditions and trip the generator as fast as possible if the locus of the pole slip is inside the generator. If the centre of pole slip is outside the generator, situated out in the power grid, the first action should be to split the network into two parts, after line protection action. If this fails there should be operation of the generator pole slip protection, to prevent further damages to the generator block.

7.16.3 Setting guidelines

GlobalBaseSel: Selects the global base value group used by the function to define (*IBase*), (*VBase*) and (*SBase*).

Operation: With the parameter *Operation* the function can be set *Enabled* or *DIsabled*.

MeasureMode: The voltage and current used for the impedance measurement is set by the parameter *MeasureMode*. The setting possibilities are: *PosSeq*, *AB*, *BC*, or *CA*. If all phase voltages and phase currents are fed to the IED the *PosSeq* alternative is recommended (default).

Further settings can be illustrated in figure 248.

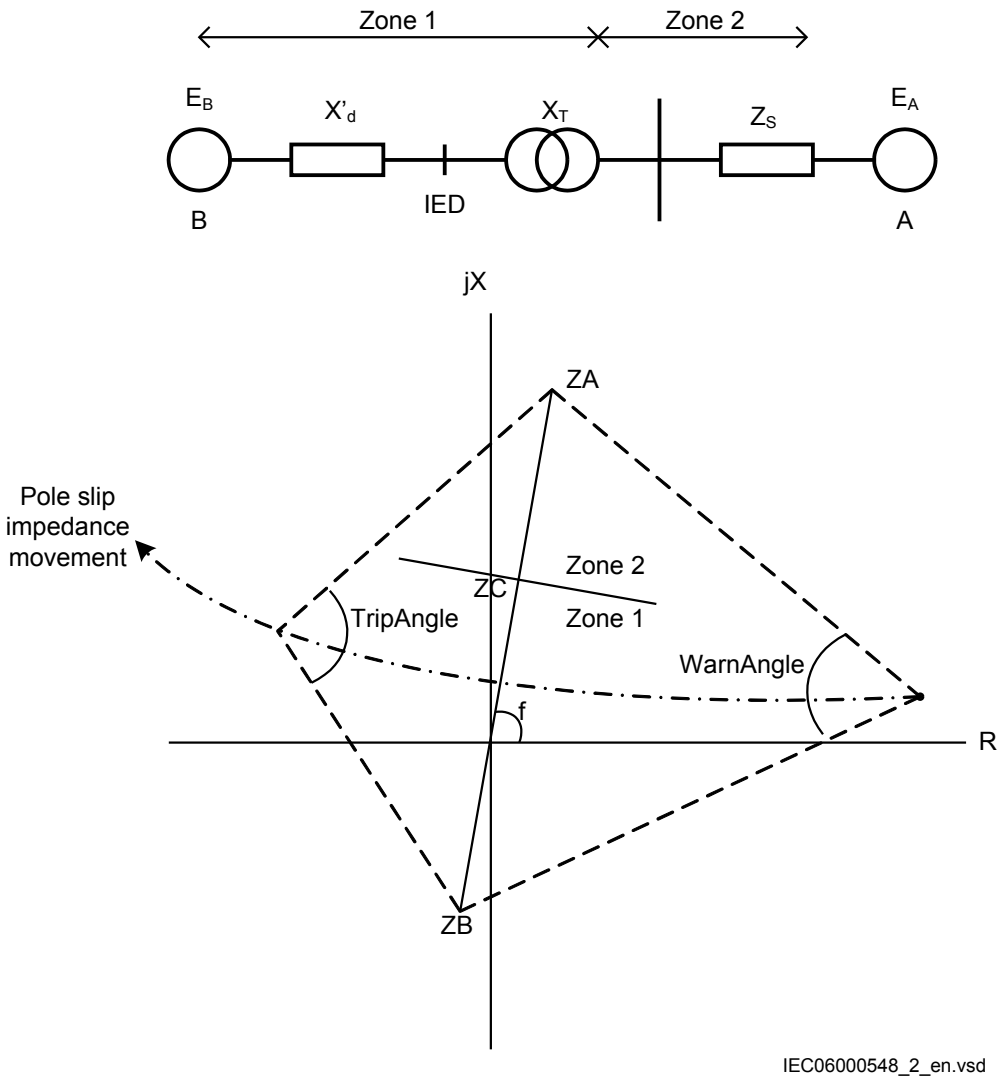

Figure 248: Settings for the Pole slip detection function

The *ImpedanceZA* is the forward impedance as show in figure 248. *ZA* should be the sum of the transformer impedance XT and the equivalent impedance of the external system ZS. The impedance is given in % of the base impedance, according to equation 445.

$$Z_{Base} = \frac{UBase/\sqrt{3}}{IBase}$$

(Equation 445)

The *ImpedanceZB* is the reverse impedance as show in figure 248. *ZB* should be equal to the generator transient reactance X'd. The impedance is given in % of the base impedance, see equation 445.

The *ImpedanceZC* is the forward impedance giving the borderline between zone 1 and zone 2. ZC should be equal to the transformer reactance ZT. The impedance is given in % of the base impedance, see equation 445.

The angle of the impedance line ZB – ZA is given as *AnglePhi* in degrees. This angle is normally close to 90°.

StartAngle: An alarm is given when movement of the rotor is detected and the rotor angle exceeds the angle set for *StartAngle*. The default value 110° is recommended. It should be checked so that the points in the impedance plane, corresponding to the chosen *StartAngle* does not interfere with apparent impedance at maximum generator load.

TripAngle: If a pole slip has been detected: change of rotor angle corresponding to slip frequency 0.2 – 8 Hz, the slip line ZA – ZB is crossed and the direction of rotation is the same as at start, a trip is given when the rotor angle gets below the set *TripAngle*. The default value 90° is recommended.

N1Limit: The setting *N1Limit* gives the number of pole slips that should occur before trip, if the crossing of the slip line ZA – ZB is within zone 1, that is, the node of the pole slip is within the generator transformer block. The default value 1 is recommended to minimize the stress on the generator and turbine at out of step conditions.

N2Limit: The setting *N2Limit* gives the number of pole slips that should occur before trip, if the crossing of the slip line ZA – ZB is within zone 2, that is, the node of the pole slip is in the external network. The default value 3 is recommended give external protections possibility to split the network and thus limit the system consequencies.

ResetTime: The setting *ResetTime* gives the time for (PSPPPAM ,78) function to reset after start when no pole slip been detected. The default value 5s is recommended.

7.16.3.1 Setting example for line application

In case of out of step conditions this shall be detected and the line between substation 1 and 2 shall be tripped.

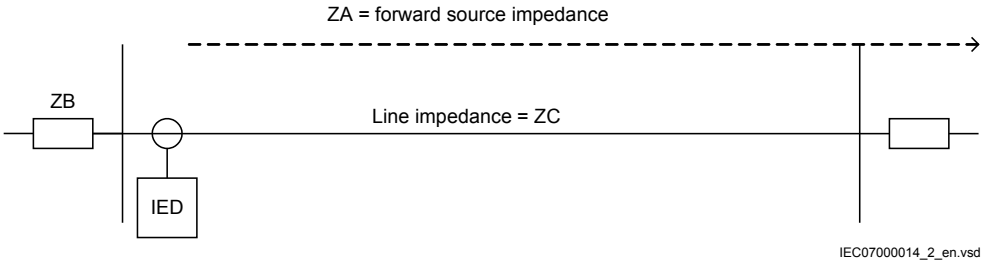

Figure 249: Line application of pole slip protection

If the apparent impedance crosses the impedance line ZB – ZA this is the detection criterion of out of step conditions, see figure 250.

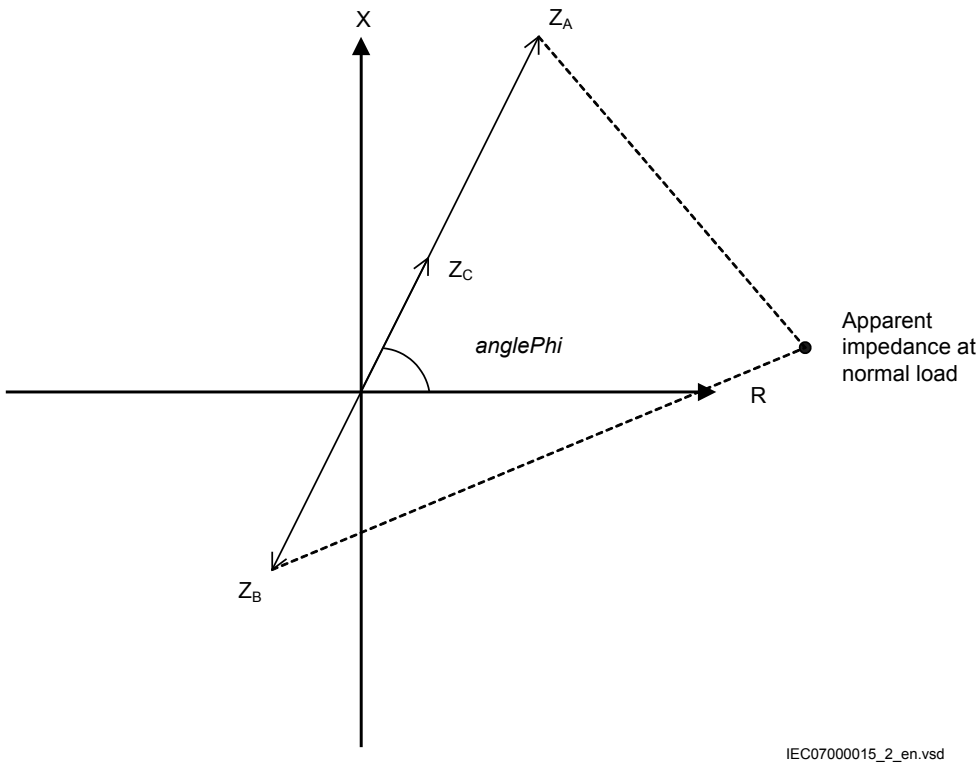

Figure 250: Impedances to be set for pole slip protection

The setting parameters of the protection is:

Z_A:	Line + source impedance in the forward direction
Z_B:	The source impedance in the reverse direction
Z_C:	The line impedance in the forward direction
AnglePhi:	The impedance phase angle

Use the following data:

UBase: 400 kV

SBase set to 1000 MVA

Short circuit power at station 1 without infeed from the protected line: 5000 MVA (assumed to a pure reactance)

Short circuit power at station 2 without infeed from the protected line: 5000 MVA (assumed to a pure reactance

Line impedance: 2 + j20 ohm

With all phase voltages and phase currents available and fed to the protection IED, it is recommended to set the *MeasureMode* to positive sequence.

The impedance settings are set in pu with ZBase as reference:

$$ZBase = \frac{UBase^2}{SBase} = \frac{400^2}{1000} = 160 ohm$$

(Equation 446)

$$ZA = Z(line) + Zsc(station2) = 2 + j20 + j\frac{400^2}{5000} = 2 + j52 ohm$$

(Equation 447)

This corresponds to:

$$ZA = \frac{2 + j52}{160} = 0.0125 + j0.325 pu = 0.325\angle 88° pu$$

(Equation 448)

Set ZA to 0.32.

$$ZB = Zsc(station1) = j\frac{400^2}{5000} = j32 ohm$$

(Equation 449)

This corresponds to:

$$ZB = \frac{j32}{160} = j0.20 pu = 0.20\angle 90° pu$$

(Equation 450)

Set ZB to 0.2

This corresponds to:

$$ZC = \frac{2 + j20}{160} = 0.0125 + j0.125 pu = 0.126\angle 84° pu$$

(Equation 451)

Set ZC to 0.13 and *AnglePhi* to 88°

The warning angle (*StartAngle*) should be chosen not to cross into normal operating area. The maximum line power is assumed to be 2000 MVA. This corresponds to apparent impedance:

$$Z = \frac{U^2}{S} = \frac{400^2}{2000} = 80 ohm$$

(Equation 452)

Simplified, the example can be shown as a triangle, see figure 251.

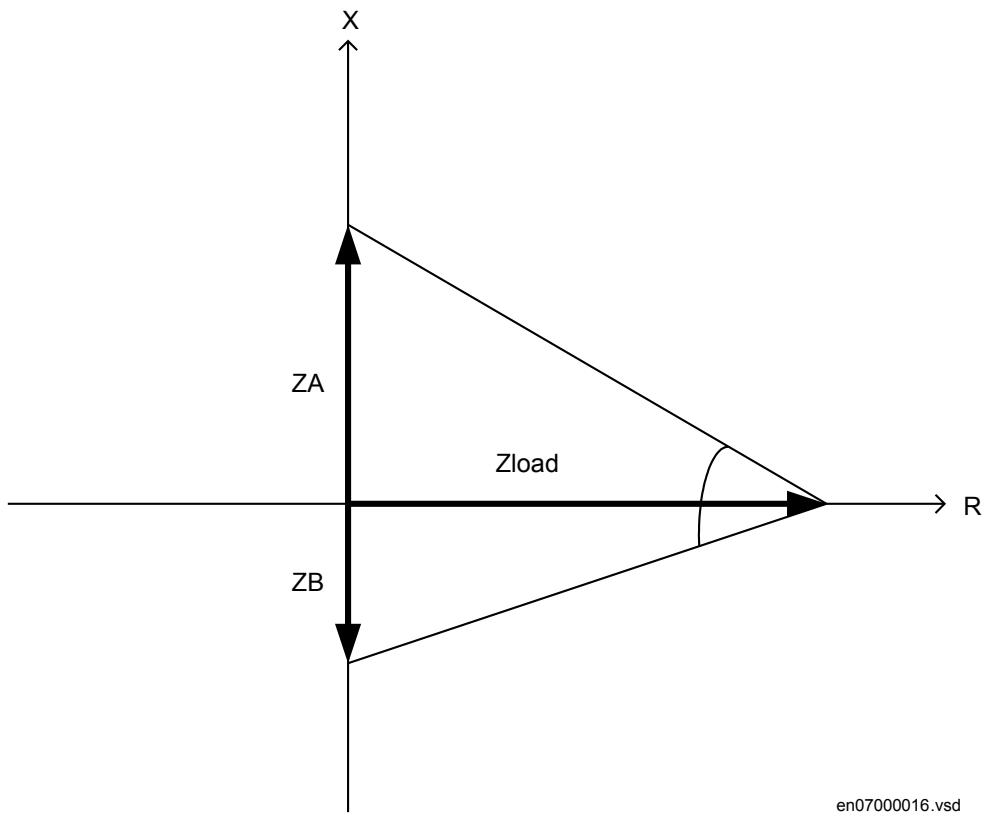

Figure 251: Simplified figure to derive StartAngle

$$angleStart \geq \arctan\frac{ZB}{Zload} + \arctan\frac{ZA}{Zload} = \arctan\frac{32}{80} + \arctan\frac{52}{80} = 21.8^0 + 33.0 \approx 55^0$$

(Equation 453)

In case of minor damped oscillations at normal operation we do not want the protection to start. Therefore we set the start angle with large margin.

Set *StartAngle* to 110°

For the *TripAngle* it is recommended to set this parameter to 90° to assure limited stress for the circuit breaker.

In a power system it is desirable to split the system into predefined parts in case of pole slip. The protection is therefore situated at lines where this predefined split shall take place.

Normally the *N1Limit* is set to 1 so that the line will be tripped at the first pole slip.

If the line shall be tripped at all pole slip situations also the parameter *N2Limit* is set to 1. In other cases a larger number is recommended.

7.16.3.2 Setting example for generator application

In case of out of step conditions this shall be checked if the pole slip centre is inside the generator (zone 1) or if it is situated in the network (zone 2).

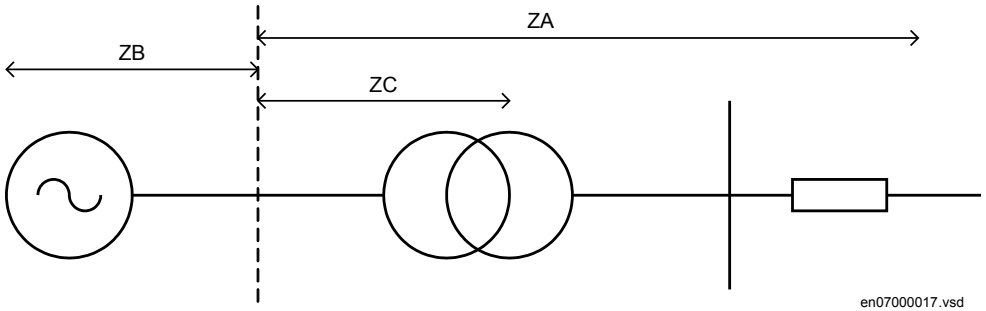

Figure 252: Generator application of pole slip protection

If the apparent impedance crosses the impedance line ZB – ZA this is the detected criterion of out of step conditions, see figure 253.

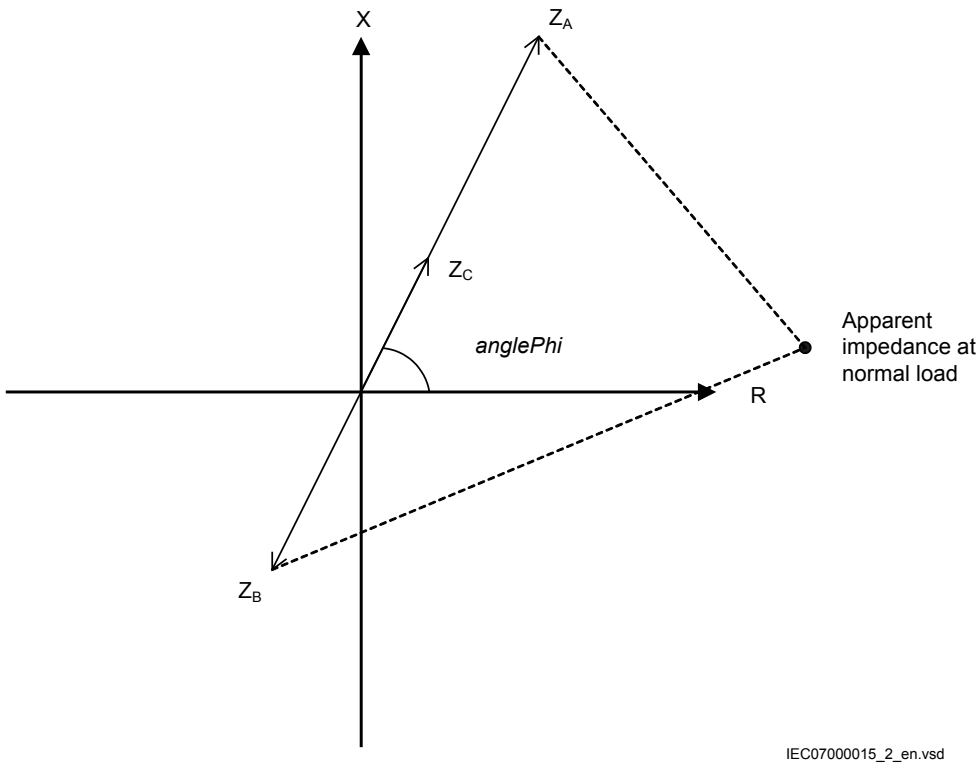

Figure 253: Impedances to be set for pole slip protection PSPPPAM (78)

The setting parameters of the protection are:

Z_A	Block transformer + source impedance in the forward direction
Z_B	The generator transient reactance
Z_C	The block transformer reactance
AnglePhi	The impedance phase angle

Use the following generator data:

VBase: 20 kV

SBase set to 200 MVA

X_d': 25%

Use the following block transformer data:

VBase: 20 kV (low voltage side)

SBase set to 200 MVA

e_k: 15%

Short circuit power from the external network without infeed from the protected line: 5000 MVA (assumed to a pure reactance).

We have all phase voltages and phase currents available and fed to the protection IED. Therefore it is recommended to set the *MeasureMode* to positive sequence.

The impedance settings are set in pu with ZBase as reference:

$$ZBase = \frac{UBase^2}{SBase} = \frac{20^2}{200} = 2.0ohm$$

(Equation 454)

$$ZA = Z(transf) + Zsc(network) = j\frac{20^2}{200} \cdot 0.15 + j\frac{20^2}{5000} = j0.38ohm$$

(Equation 455)

This corresponds to:

$$ZA = \frac{j0.38}{2.0} = j0.19pu = 0.19\angle 90° pu$$

(Equation 456)

Set ZA to 0.19

$$ZB = jX_d' = j\frac{20^2}{200} \cdot 0.25 = j0.5ohm$$

(Equation 457)

This corresponds to:

$$ZB = \frac{j0.5}{2.0} = j0.25pu = 0.25\angle 90° pu$$

(Equation 458)

Set ZB to 0.25

$$ZC = jX_T = j\frac{20^2}{200} \cdot 0.15 = j0.3ohm$$

(Equation 459)

This corresponds to:

$$ZC = \frac{j0.3}{2.0} = j0.15pu = 0.15\angle 90^o pu$$

(Equation 460)

Set ZC to 0.15 and *AnglePhi* to 90°.

The warning angle (*StartAngle*) should be chosen not to cross into normal operating area. The maximum line power is assumed to be 200 MVA. This corresponds to apparent impedance:

$$Z = \frac{U^2}{S} = \frac{20^2}{200} = 2ohm$$

(Equation 461)

Simplified, the example can be shown as a triangle, see figure 254.

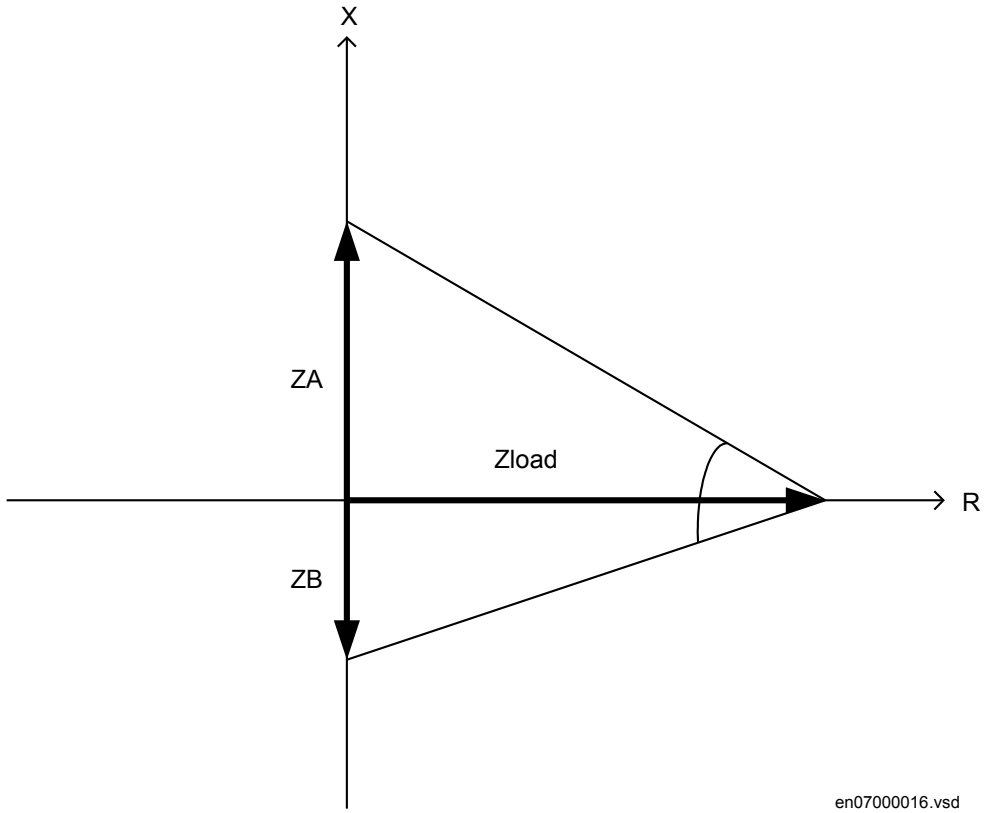

Figure 254: Simplified figure to derive StartAngle

$$angleStart \geq \arctan\frac{ZB}{Zload} + \arctan\frac{ZA}{Zload} = \arctan\frac{0.25}{2} + \arctan\frac{0.19}{2} = 7.1^0 + 5.4 \approx 13^0$$

(Equation 462)

In case of minor damped oscillations at normal operation we do not want the protection to start. Therefore we set the start angle with large margin.

Set *StartAngle* to 110°.

For the *TripAngle* it is recommended to set this parameter to 90° to assure limited stress for the circuit breaker.

If the centre of pole slip is within the generator block set *N1Limit* to 1 to get trip at first pole slip.

If the centre of pole slip is within the network set *N2Limit* to 3 to get enable split of the system before generator trip.

7.17 Out-of-step protection OOSPPAM (78)

7.17.1 Identification

Function description	IEC 61850 identification	IEC 60617 identification	ANSI/IEEE C37.2 device number
Out-of-step protection	OOSPPAM	Φ<	78

7.17.2 Application

Under balanced and stable conditions, a generator operates with a constant rotor (power) angle, delivering an active electrical power to the power system, which is equal to the mechanical input power on the generator axis, minus the small losses in the generator. In the case of a three-phase fault electrically close to the generator, no active power can be delivered. Almost all mechanical power from the turbine is under this condition used to accelerate the moving parts, that is, the rotor and the turbine. If the fault is not cleared quickly, the generator may not remain in synchronism after the fault has been cleared. If the generator loses synchronism (Out-of-step) with the rest of the system, pole slipping occurs. This is characterized by a wild flow of synchronizing power, which reverses in direction twice for every slip cycle.

The out-of-step phenomenon occurs when a phase opposition occurs periodically between different parts of a power system. This is often shown in a simplified way as two equivalent generators connected to each other via an equivalent transmission line and the phase difference between the equivalent generators is 180 electrical degrees.

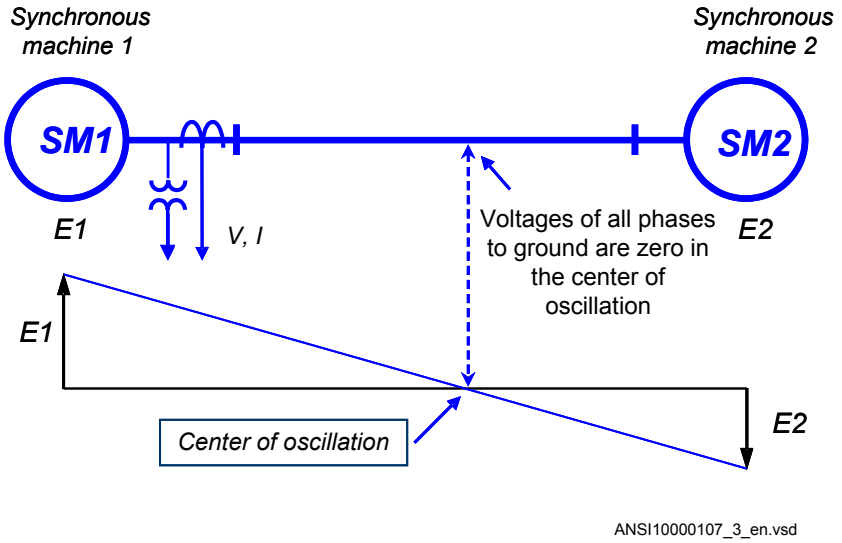

Figure 255: The center of electromechanical oscillation

The center of the electromechanical oscillation can be in the generator unit (or generator-transformer unit) or outside, somewhere in the power system. When the center of the electromechanical oscillation occurs within the generator it is essential to trip the generator immediately. If the center of the electromechanical oscillation is outside any of the generators in the power system, the power system should be split into two different parts; so each part may have the ability to restore stable operating conditions. This is sometimes called “islanding”. The objective of islanding is to prevent an out-of-step condition from spreading to the healthy parts of the power system. For this purpose, uncontrolled tripping of interconnections or generators must be prevented. It is evident that a reasonable strategy for out-of-step relaying as well as, appropriate choice of other protection relays, their locations and settings require detailed stability studies for each particular power system and/or subsystem. On the other hand, if severe swings occur, from which a fast recovery is improbable, an attempt should be made to isolate the affected area from the rest of the system by opening connections at predetermined points. The electrical system parts swinging to each other can be separated with the lines closest to the center of the power swing allowing the two systems to be stable as separated islands. The main problem involved with systemic islanding of the power system is the difficulty, in some cases, of predicting the optimum splitting points, because they depend on the fault location and the pattern of generation and load at the respective time. It is hardly possible to state general rules for out-of-step relaying, because they shall be defined according to the particular design and needs of each electrical network. The reason for the existence of two zones of operation is selectivity, required for successful islanding. If there are several out-of-step relays in the power system, then selectivity between separate relays is obtained by the relay reach (for example zone 1) rather then by time grading.

The out-of-step condition of a generator can be caused by different reasons. Sudden events in an electrical power system such as large changes in load, fault occurrence or slow fault clearance, can cause power oscillations, that are called power swings. In a non-recoverable situation, the power swings become so severe that the synchronism is lost: this condition is called pole slipping.

Undamped oscillations occur in power systems, where generator groups at different locations are not strongly connected and can oscillate against each other. If the connection between the generators is too weak the magnitude of the oscillations may increase until the angular stability is lost. More often, a three-phase short circuit (unsymmetrical faults are much less dangerous in this respect) may occur in the external power grid, electrically close to the generator. If the fault clearing time is too long, the generator accelerates so much, that the synchronism cannot be maintained, see Figure 256.

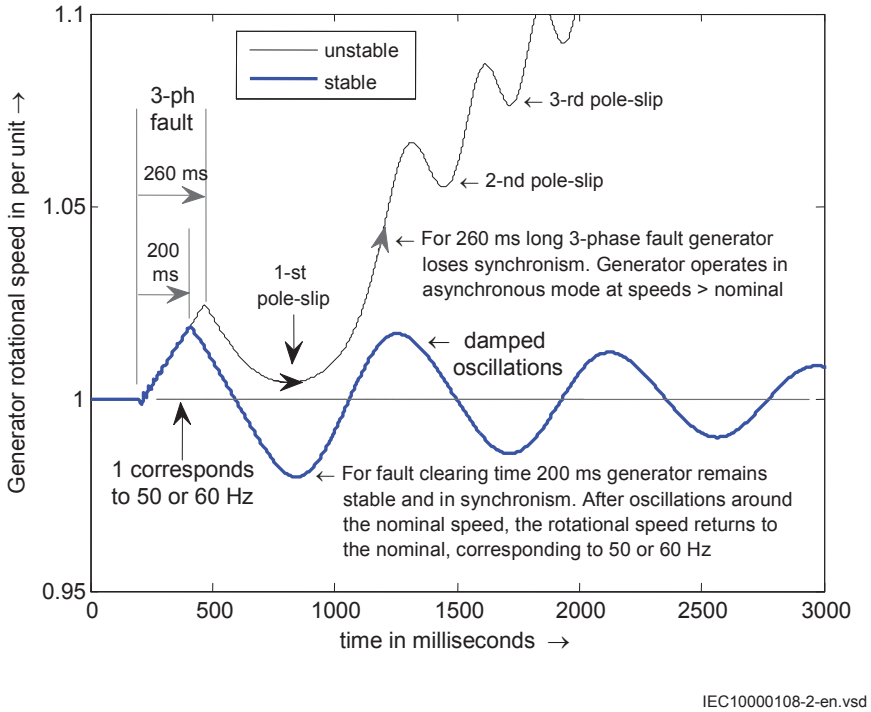

Figure 256: Stable and unstable case. For the fault clearing time tcl = 200 ms, the generator remains in synchronism, for tcl = 260 ms, the generator loses step.

A generator out-of-step condition, with successive pole slips, can result in damages to the generator, shaft and turbine.

- Stator windings are under high stress due to electrodynamic forces.
- The current levels during an out-of-step condition can be higher than those during a three-phase fault and, therefore, there is significant torque impact on the generator-turbine shaft.
- In asynchronous operation there is induction of currents in parts of the generator normally not carrying current, thus resulting in increased heating. The consequence can be damages on insulation and iron core of both rotor and stator.

Measurement of the magnitude, direction and rate-of-change of load impedance relative to a generator's terminals provides a convenient and generally reliable means of detecting whether pole-slipping is taking place. The out-of-step protection should protect a generator or motor (or two weakly connected power systems) against pole-slipping with severe consequences for the machines and stability of the power system. In particular it should:

1. Remain stable for normal steady state load.
2. Distinguish between stable and unstable rotor swings.
3. Locate electrical centre of a swing.
4. Detect the first and the subsequent pole-slips.
5. Take care of the circuit breaker soundness.
6. Distinguish between generator and motor out-of-step conditions.
7. Provide information for post-disturbance analysis.

7.17.3 Setting guidelines

The setting example for generator protection application shows how to calculate the most important settings *ForwardR*, *ForwardX*, *ReverseR*, and *ReverseX*.

Table 30: An example how to calculate values for the settings ForwardR, ForwardX, ReverseR, and ReverseX

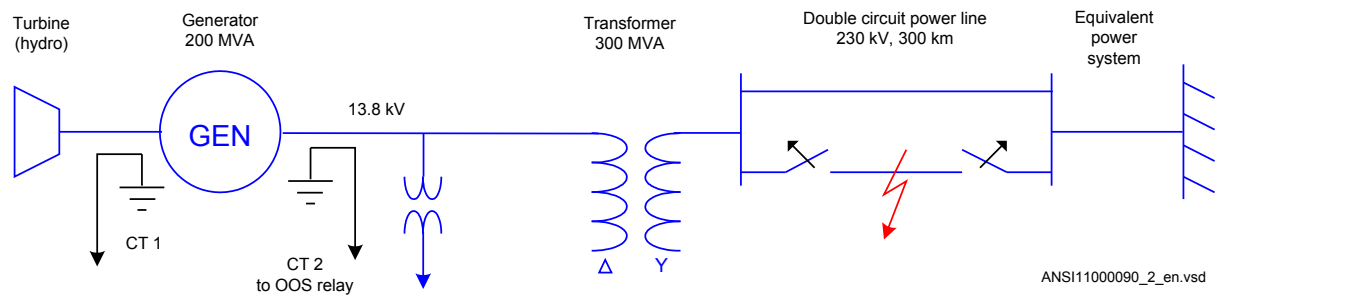

	Generator	Step-up transformer	Single power line	Power system
Data required	VBase = Vgen = 13.8 kV IBase = Igen = 8367 A Xd' = 0.2960 pu	V1 = 13.8 kV usc = 10% V2 = 230 kV I1 = 12 551 A Xt = 0.1000 pu (transf. ZBase)	Vline = 230 kV Xline/km = 0.4289 Ω/km	Vnom = 230 kV SC level = 5000 MVA SC current = 12 551 A φ = 84.289°

Table continues on next page

	Rs = 0.0029 pu	Rt = 0.0054 pu (transf. ZBase)	Rline/km = 0.0659 Ω/km	Ze = 10.5801 Ω
1-st step in calculation	ZBase = 0.9522 Ω (generator) Xd' = 0.2960 · 0.952 = 0.282 Ω Rs = 0.0029 · 0.952 = 0.003 Ω	ZBase (13.8 kV) = 0.6348 Ω Xt = 0.100 · 0.6348 = 0.064 Ω Rt = 0.0054 · 0.635 = 0.003 Ω	Xline = 300 · 0.4289 = 128.7 Ω Rline = 300 · 0.0659 = 19.8 Ω (X and R above on 230 kV basis)	Xe = Z_e · sin (φ) = 10.52 Ω Re = Z_e · cos (φ) = 1.05 Ω (Xe and Re on 230 kV basis)
2-nd step in calculation	Xd' = 0.2960 · 0.952 = 0.282 Ω Rs = 0.0029 · 0.952 = 0.003 Ω	Xt = 0.100 · 0.6348 = 0.064 Ω Rt = 0.0054 · 0.635 = 0.003 Ω	Xline= 128.7 · $(13.8/230)^2$ = 0.463 Ω Rline = 19.8 · $(13.8/230)^2$ = 0.071 Ω (X and R referred to 13.8 kV)	Xe = 10.52 · $(13.8/230)^2$ = 0.038 Ω Re = 1.05 · $(13.8/230)^2$ = 0.004 Ω (X and R referred to 13.8 kV)
3-rd step in calculation	ForwardX = Xt + Xline + Xe = 0.064 + 0.463 + 0.038 = 0.565 Ω; ReverseX = Xd' = 0.282 Ω (all referred to gen. voltage 13.8 kV) ForwardR = Rt + Rline + Re = 0.003 + 0.071 + 0.004 = 0.078 Ω; ReverseR = Rs = 0.003 Ω (all referred to gen. voltage 13.8 kV)			
Final resulted settings	ForwardX = 0.565/0.9522 · 100 = 59.33 in % ZBase; ReverseX = 0.282/0.9522 · 100 = 29.6 in % ZBase (all referred to 13.8 kV) ForwardR = 0.078/0.9522 · 100 = 8.19 in % ZBase; ReverseR = 0.003/0.9522 · 100 = 0.29 in % ZBase (all referred to 13.8 kV)			

Settings *ForwardR*, *ForwardX*, *ReverseR*, and *ReverseX*.

- A precondition in order to be able to use the Out-of-step protection and construct a suitable lens characteristic is that the power system in which the Out-of-step protection is installed, is modeled as a two-machine equivalent system, or as a single machine – infinite bus equivalent power system. Then the impedances from the position of the Out-of-step protection in the direction of the normal load flow can be taken as forward.
- The settings *ForwardX*, *ForwardR*, *ReverseX* and *ReverseR* must, if possible, take into account, the post-disturbance configuration of the simplified power system. This is not always easy, in particular with islanding. But for the two machine model as in Table 30, the most probable scenario is that only one line is in service after the fault on one power line has been cleared by line protections. The settings *ForwardX*, *ForwardR* must therefore take into account the reactance and resistance of only one power line.
- All the reactances and resistances must be referred to the voltage level where the Out-of-step relay is installed; for the example case shown in Table 30, this is the generator nominal voltage VBase = 13.8 kV. This affects all the forward reactances and resistances in Table 30.
- All reactances and resistances must be finally expressed in percent of ZBase, where ZBase is for the example shown in Table 30 the base impedance of the generator, ZBase = 0.9522 Ω. Observe that the power transformer's base impedance is different, ZBase = 0.6348 Ω. Observe that this latter power transformer ZBase = 0.6348 Ω must be used when the power transformer reactance and resistance are transformed.

- For the synchronous machines as the generator in Table 30, the transient reactance Xd' shall be used. This due to the relatively slow electromechanical oscillations under out-of-step conditions.
- Sometimes the equivalent resistance of the generator is difficult to get. A good estimate is 1 percent of transient reactance Xd'. No great error is done if this resistance is set to zero (0).
- Inclination of the Z-line, connecting points SE and RE, against the real (R) axis can be calculated as arctan ((*ReverseX* + *ForwardX*) / (*ReverseR* + *ForwardR*)), and is for the case in Table 30 equal to 84.55 degrees, which is a typical value.

Other settings:

- *ReachZ1*: Determines the reach of the zone 1 in the forward direction. Determines the position of the X-line which delimits zone 1 from zone 2. Set in % of *ForwardX*. In the case shown in Table 30, where the reactance of the step-up power transformer is 11.32 % of the total *ForwardX*, the setting *ReachZ1* should be set to *ReachZ1 = 12* %. This means that the generator – step-up transformer unit would be in the zone 1. In other words, if the centre of oscillation would be found to be within the zone 1, only a very limited number of pole-slips would be allowed, usually only one.
- *pick up Angle*: Angle between the two equivalent rotors induced voltages (that is, the angle between the two internal induced voltages E1 and E2 in an equivalent simplified two-machine system) to get the pickup signal, in degrees. The width of the lens characteristic is determined by the value of this setting. Whenever the complex impedance Z(R, X) enters the lens, this is a sign of instability. The angle recommended is 110 or 120 degrees, because it is at this rotor angle where problems with dynamic stability usually begin. Power angle 120 degrees is sometimes called “the angle of no return” because if this angle is reached under generator swings, the generator is most likely to lose synchronism. When the complex impedance Z(R, X) enters the lens the start output signal (`PICKUP`) is set to 1 (`TRUE`).
- *TripAngle*: The setting *TripAngle* specifies the value of the rotor angle where the trip command is sent to the circuit breaker in order to minimize the stress to which the breaker is exposed when breaking the currents. The range of this value is from 15° to 90°, with higher values suitable for longer breaker opening times. If a breaker opening is initiated at for example 60°, then the circuit breaker opens its contacts closer to 0°, where the currents are smaller. If the breaker opening time *tBreaker* is known, then it is possible to calculate more exactly when opening must be initiated in order to open the circuit breaker contacts as close as possible to 0°, where the currents are smallest. If the breaker opening time *tBreaker* is specified (that is, higher than the default 0.0 s, where 0.0 s means that *tBreaker* is unknown), then this alternative way to determine the moment when a command to open the breaker is sent, is automatically chosen instead of the more approximate method, based on the *TripAngle*.

- *tReset*: Interval of time since the last pole-slip detected, when the Out-of-step protection is reset. If there is no more pole slips detected under the time interval specified by *tReset* since the previous one, the function is reset. All outputs are set to 0 (`FALSE`). If no pole slip at all is detected under interval of time specified by *tReset* since the pickup signal has been set (for example a stable case with synchronism retained), the function is as well reset, which includes the pickup output signal (`PICKUP`), which is reset to 0 (`FALSE`) after *tReset* interval of time has elapsed. However, the measurements of analogue quantities such as R, X, P, Q, and so on continue without interruptions. Recommended setting of *tReset* is in the range of 6 to 12 seconds.
- *NoOfSlipsZ1*: Maximum number of pole slips with centre of electromechanical oscillation within zone 1 required for a trip. Usually, *NoOfSlipsZ1= 1*.
- *NoOfSlipsZ2*: Maximum number of pole slips with centre of electromechanical oscillation within zone 2 required for a trip. The reason for the existence of two zones of operation is selectivity, required particularly for successful islanding. If there are several pole slip (out-of-step) relays in the power system, then selectivity between relays is obtained by the relay reach (for example zone 1) rather then by time grading. In a system, as in Table 30, the number of allowed pole slips in zone 2 can be the same as in zone 1. Recommended value: *NoOfSlipsZ2 = 2* or *3*.
- *Operation*: With the setting *Operation* OOSPPAM function can be set *On/Off*.
- *OperationZ1*: Operation zone 1 *Enabled*, *Disabled*. If *OperationZ1 = Disabled*, all pole-slips with centre of the electromagnetic oscillation within zone 1 are ignored. Default setting = *Enabled*. More likely to be used is the option to extend zone 1 so that zone 1 even covers zone 2. This feature is activated by the input to extend the zone 1 (EXTZ1).
- *OperationZ2*: Operation zone 2 *Enabled*, *Disabled*. If *OperationZ1 = Disabled*, all pole-slips with centre of the electromagnetic oscillation within zone 2 are ignored. Default setting = *Enabled*.
- *tBreaker*: Circuit breaker opening time. Use the default value *tBreaker = 0.000 s* if unknown. If the value is known, then a value higher than 0.000 is specified, for example *tBreaker = 0.040 s*: the out-of-step function gives a trip command approximately 0.040 seconds before the currents reach their minimum value. This in order to decrease the stress imposed to the circuit breaker.
- *VBase*: This is the voltage at the point where the Out-of-step protection is installed. If the protection is installed on the generator output terminals, then *VBase* is the nominal (rated) phase to phase voltage of the protected generator. All the resistances and reactances are measured and displayed referred to voltage *VBase*. Observe that *ReverseX*, *ForwardX*, *ReverseR*, and *ForwardR* must be given referred to *VBase.IBase* is the protected generator nominal (rated) current, if the Out-of-step protection belongs to a generator protection scheme.
- *InvertCTCurr*: If the currents fed to the Out-of-step protection are measured on the protected generator neutral side (LV-side) then inversion is not necessary (*InvertCTCurr = Disabled*), provided that the CT's orientation complies with ABB recommendations, as shown in Table 30. If the currents fed to the Out-of-step

protection are measured on the protected generator output terminals side (HV-side), then invertion is necessary (*InvertCTCurr = Enabled*), provided that the CT's actual direction complies with ABB recommendations, as shown in Table 30.

7.18 Automatic switch onto fault logic, voltage and current based ZCVPSOF

7.18.1 Identification

Function description	IEC 61850 identification	IEC 60617 identification	ANSI/IEEE C37.2 device number
Automatic switch onto fault logic, voltage and current based	ZCVPSOF	-	-

7.18.2 Application

Automatic switch onto fault logic, voltage- and current-based function ZCVPSOF is a complementary function to impedance measuring functions, but may use the information from such functions.

With ZCVPSOF, a fast trip is achieved for a fault on the whole line when the line is being energized. The ZCVPSOF tripping is generally non-directional to secure a trip at fault situations where directional information cannot be established, for example, due to lack of polarizing voltage when a line potential transformer is used.

Automatic activation based on dead-line detection can only be used when the voltage transformer is situated on the line side of a circuit breaker.

When line side voltage transformers are used, the use of the nondirectional distance zones secures switch onto fault tripping for close-in three-phase short circuits. The use of the nondirectional distance zones also gives a fast fault clearance when energizing a bus from the line with a short circuit fault on the bus.

Other protection functions like time-delayed phase and zero-sequence overcurrent function can be connected to ZCVPSOF to increase the dependability in the scheme.

When the voltage transformers are situated on the bus side, the automatic switch onto fault detection based on dead-line detection is not possible. In such cases the deadline detection is bypassed using the breaker closing status and the switch onto fault logic is activated.

7.18.3 Setting guidelines

The parameters for automatic switch onto fault logic, voltage- and current-based function ZCVPSOF are set via the local HMI or Protection and Control Manager PCM600.

The distance protection zone used for instantaneous trip by ZCVPSOF has to be set to cover the entire protected line with a safety margin of minimum 20%.

Common base IED values for primary current (*IBase*), primary voltage (*UBase*) and primare power (*SBase*) are set in the global base values for settings function GBASVAL.

GlobalBaseSel is used to select GBASVAL for reference of base values.

Operation: The operation of ZCVPSOF is by default set to *On*. The parameter must be set to *Off* if ZCVPSOF is not to be used.

IPh< is used to set the current level for the detection of a dead line. *IPh*< is, by default, set to 20% of *IBase*. It shall be set with a sufficient margin (15–20%) below the minimum expected load current. In many cases, the minimum load current of a line is close to zero and even can be zero. The operating value must exceed the maximum charging current of an overhead line when only one phase is disconnected (mutual coupling in the other phases).

UPh< is used to set the voltage level for the detection of a dead line. *UPh*< is, by default, set to 70% of *UBase*. This is a suitable setting in most cases, but it is recommended to check the suitability in the actual application.

AutoInitMode: automatic activating of ZCVPSOF is, by default, set to *DLD disabled*, which means the dead-line logic detection is disabled. If an automatic activation of the dead-line detection is required, the parameter *AutoInitMode* has to be set to either *Voltage*, *Current* or *Current & Voltage*.

When *AutoInitMode* is set to *Voltage*, the dead-line detection logic checks that the three-phase voltages are lower than the set *UPh*< level.

When *AutoInitMode* is set to *Current*, the dead-line detection logic checks if the three-phase currents are lower than the set *IPh*< level.

When *AutoInitMode* is set to *Current & Voltage*, the dead-line detection logic checks that both three-phase currents and three-phase voltages are lower than the set *IPh*< and *UPh*< levels.

Otherwise, the logic is activated by an external `BC` input.

tSOTF: the drop delay of ZCVPSOF is, by default, set to 1.0 seconds, which is suitable for most applications.

tDLD: The time delay for activating ZCVPSOF by the internal dead-line detection is, by default, set to 0.2 seconds. It is suitable in most applications. The delay shall not be set too short to avoid unwanted activations during transients in the system.

Mode: The operation of ZCVPSOF has three modes for defining the criteria for tripping. The setting of *Mode* is, by default, *UlLevel*, which means that the tripping criterion is based on the setting of *IPh*< and *UPh*<. The choice of *UlLevel* gives a faster and more sensitive operation of the function, which is important for reducing the stress that might occur when energizing onto a fault. However, the voltage recovery can be slow in some systems when energizing the line. Therefore, if the timer *tDuration* is set too short, ZCVPSOF can interpret this as a fault and release a trip.

When *Mode* is set to *Impedance*, the operate criterion is based on the `BC` input (breaker closing), which can be the start of the overreaching zone from the impedance zone measurement or a *tOperate*-delayed `START_DLYD` input. A nondirectional output signal should be used from an overreaching zone. The selection of the *Impedance* mode gives increased security.

When *Mode* is set to *UlLvl&Imp*, the condition for tripping is an ORed between *UlLevel* and *Impedance*.

tDuration: The setting of the timer for the release of UlLevel is, by default, 0.02 seconds, which has proven to be suitable in most cases from field experience. If a shorter time delay is to be set, it is necessary to consider the voltage recovery time during line energization.

tOperate: The time delay for the `START_DLYD` input to activate `TRIP` when *Mode* is set to *Impedance* or *UlLvl&Imp* is, by default, set to 0.03 seconds.

7.19 Phase preference logic PPLPHIZ

7.19.1 Identification

Function description	IEC 61850 identification	IEC 60617 identification	ANSI/IEEE C37.2 device number
Phase preference logic	PPLPHIZ	-	-

7.19.2 Application

Phase preference logic function PPLPHIZ is an auxiliary function to Distance protection zone, quadrilateral characteristic ZMQPDIS (21) and Phase selection with load encroachment, quadrilateral characteristic function FDPSPDIS (21). The purpose

is to create the logic in resonance or high resistive grounded systems (normally sub-transmission) to achieve the correct phase selective tripping during two simultaneous single-phase ground-faults in different phases on different line sections.

Due to the resonance/high resistive grounding principle, the ground faults in the system gives very low fault currents, typically below 25 A. At the same time, the occurring system voltages on the healthy phases will increase to line voltage level as the neutral displacement is equal to the phase voltage level at a fully developed ground fault. This increase of the healthy phase voltage, together with slow tripping, gives a considerable increase of the risk of a second fault in a healthy phase and the second fault can occur at any location. When it occurs on another feeder, the fault is commonly called cross-country fault.

Different practices for tripping is used by different utilities. The main use of this logic is in systems where single phase-to-ground faults are not automatically cleared, only alarm is given and the fault is left on until a suitable time to send people to track down and repair the fault. When cross-country faults occur, the practice is to trip only one of the faulty lines. In other cases, a sensitive, directional ground-fault protection is provided to trip, but due to the low fault currents long tripping times are utilized.

Figure 257 shows an occurring cross-country fault. Figure 258 shows the achievement of line voltage on healthy phases and an occurring cross-country fault.

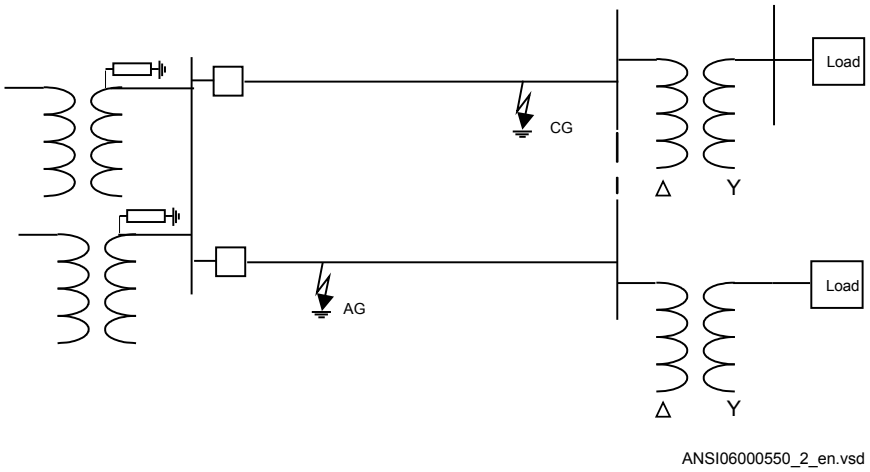

Figure 257: An occurring cross-country fault on different feeders in a sub-transmission network, high impedance (resistance, reactance) grounded

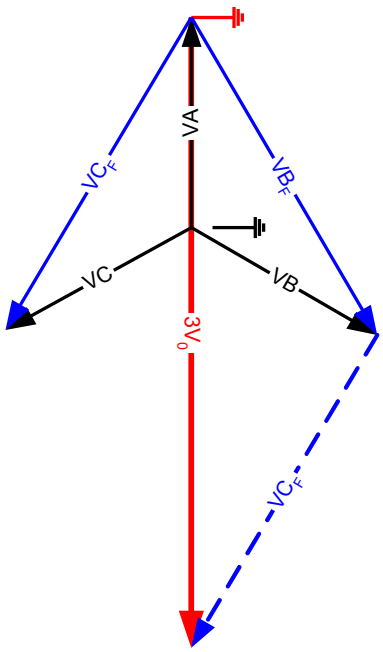

en06000551_ansi.vsd

Figure 258: The voltage increase on healthy phases and occurring neutral point voltage (3V0) at a single phase-to-ground fault and an occurring cross-country fault on different feeders in a sub-transmission network, high impedance (resistance, reactance) grounded

PPLPHIZ is connected between Distance protection zone, quadrilateral characteristic function ZMQPDIS (21) and ZMQAPDIS (21) and Phase selection with load encroachment, quadrilateral characteristic function FDPSPDIS (21) as shown in figure 259. The integer from the phase selection function, which gives the type of fault undergoes a check and will release the distance protection zones as decided by the logic. The logic includes a check of the fault loops given by the phase selection and if the fault type indicates a two or three phase fault the integer releasing the zone is not changed.

If the fault indicates and ground-fault checks are done which mode of tripping to be used, for example ABCAc, which means that fault in the phases are tripped in the cyclic order A before B before C before A. Local conditions to check the phase-to-ground voltage levels and occurring zero sequence current and voltages completes the logic.

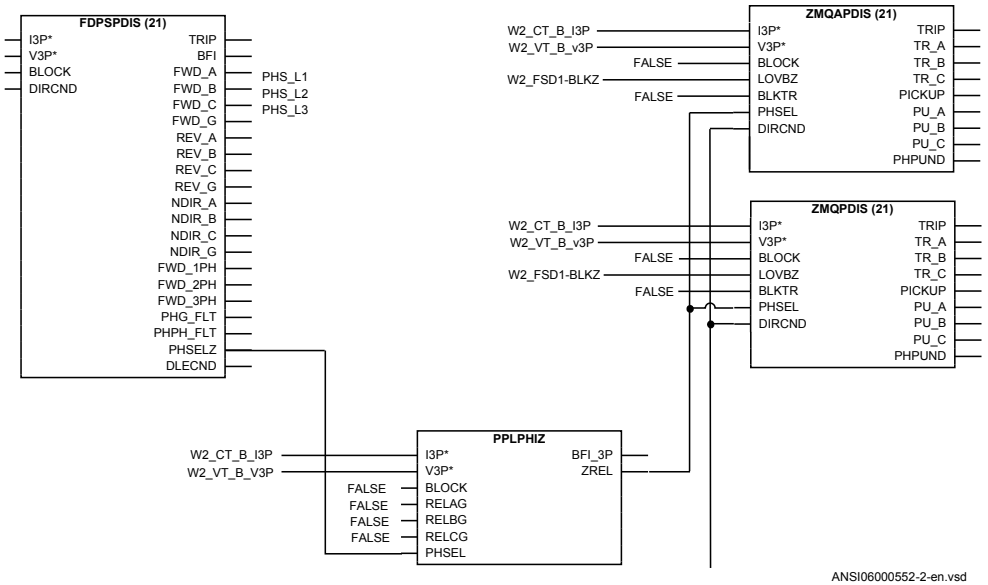

Figure 259: The connection of Phase preference logic function PPLPHIZ between Distance protection zone, quadrilateral characteristic ZMQPDIS (21) and ZMQAPDIS (21) and Phase selection with load encroachment, quadrilateral characteristic function FDPSPDIS (21)

As the fault is a double ground-faults at different locations of the network, the fault current in the faulty phase on each of the lines will be seen as a phase current and at the same time as a neutral current as the remaining phases on each feeder virtually carries no (load) current. A current through the grounding impedance does not exist. It is limited by the impedance to below the typical, say 25 to 40 A. Occurring neutral current is thus a sign of a cross-country fault (a double ground- fault)

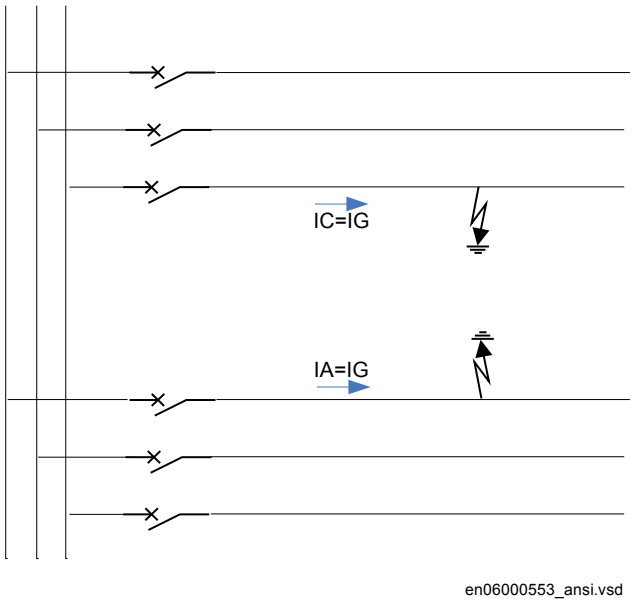

Figure 260: The currents in the phases at a double ground fault

The function has a block input (BLOCK) to block start from the function if required in certain conditions.

7.19.3 Setting guidelines

The parameters for the Phase preference logic function PPLPHIZ are set via the local HMI or PCM600.

Phase preference logic function is an intermediate logic between Distance protection zone, quadrilateral characteristic function ZMQPDIS (21) and Phase selection with load encroachment, quadrilateral characteristic function FDPSPDIS (21). Phase selection and zones are set according to normal praxis, including ground-fault loops, although ground-fault loops will only be active during a cross-country fault.

GlobalBaseSel: Selects the global base value group used by the function to define (*IBase*), (*VBase*) and (*SBase*).

OperMode: The operating mode is selected. Choices includes cyclic or acyclic phase selection in the preferred mode. This setting must be identical for all IEDs in the same galvanic connected network part.

PU27PN: The setting of the phase-to- ground voltage level (phase voltage) which is used by the evaluation logic to verify that a fault exists in the phase. Normally in a high impedance grounded system, the voltage drop is big and the setting can typically be set to 70% of base voltage (*VBase*)

PU27PP: The setting of the phase-to-phase voltage level (line voltage) which is used by the evaluation logic to verify that a fault exists in two or more phases. The voltage must be set to avoid that a partly healthy phase-to-phase voltage, for example, B-C for a A-B fault, picks-up and gives an incorrect release of all loops. The setting can typically be 40 to 50% of rated voltage (*VBase*) divided by √3, that is 40%.

3V0PU: The setting of the residual voltage level (neutral voltage) which is used by the evaluation logic to verify that an ground-fault exists. The setting can typically be 20% of base voltage (*VBase*).

Pickup_N: The setting of the residual current level (neutral current) which is used by the evaluation logic to verify that a cross-country fault exists. The setting can typically be 20% of base current (*IBase*) but the setting shall be above the maximum current generated by the system grounding. Note that the systems are high impedance grounded which means that the ground-fault currents at ground-faults are limited and the occurring IN above this level shows that there exists a two-phase fault on this line and a parallel line where the IN is the fault current level in the faulty phase. A high sensitivity need not to be achieved as the two-phase fault level normally is well above base current.

tIN: The time delay for detecting that the fault is cross-country. Normal time setting is 0.1 - 0.15 s.

tVN: The time delay for a secure VN detecting that the fault is an ground-fault or double ground-fault with residual voltage. Normal time setting is 0.1 - 0.15 s.

tOffVN: The VN voltage has a reset drop-off to ensure correct function without timing problems. Normal time setting is 0.1 s

Section 8 Current protection

8.1 Instantaneous phase overcurrent protection 3-phase output PHPIOC (50)

8.1.1 Identification

Function description	IEC 61850 identification	IEC 60617 identification	ANSI/IEEE C37.2 device number
Instantaneous phase overcurrent protection 3-phase output	PHPIOC	*3I>>*	50

8.1.2 Application

Long transmission lines often transfer great quantities of electric power from production to consumption areas. The unbalance of the produced and consumed electric power at each end of the transmission line is very large. This means that a fault on the line can easily endanger the stability of a complete system.

The transient stability of a power system depends mostly on three parameters (at constant amount of transmitted electric power):

- The type of the fault. Three-phase faults are the most dangerous, because no power can be transmitted through the fault point during fault conditions.
- The magnitude of the fault current. A high fault current indicates that the decrease of transmitted power is high.
- The total fault clearing time. The phase angles between the EMFs of the generators on both sides of the transmission line increase over the permitted stability limits if the total fault clearing time, which consists of the protection operating time and the breaker opening time, is too long.

The fault current on long transmission lines depends mostly on the fault position and decreases with the distance from the generation point. For this reason the protection

must operate very quickly for faults very close to the generation (and relay) point, for which very high fault currents are characteristic.

The instantaneous phase overcurrent protection 3-phase output PHPIOC (50) can operate in 10 ms for faults characterized by very high currents.

8.1.3 Setting guidelines

The parameters for instantaneous phase overcurrent protection 3-phase output PHPIOC (50) are set via the local HMI or PCM600.

This protection function must operate only in a selective way. So check all system and transient conditions that could cause its unwanted operation.

Only detailed network studies can determine the operating conditions under which the highest possible fault current is expected on the line. In most cases, this current appears during three-phase fault conditions. But also examine single-phase-to-ground and two-phase-to-ground conditions.

Also study transients that could cause a high increase of the line current for short times. A typical example is a transmission line with a power transformer at the remote end, which can cause high inrush current when connected to the network and can thus also cause the operation of the built-in, instantaneous, overcurrent protection.

GlobalBaseSel: Selects the global base value group used by the function to define (*IBase*), (*VBase*) and (*SBase*).

OpModeSel: This parameter can be set to *2 out of 3* or *1 out of 3*. The setting controls the minimum number of phase currents that must be larger than the set operate current *Pickup* for operation. Normally this parameter is set to *1 out of 3*and will thus detect all fault types. If the protection is to be used mainly for multi phase faults, *2 out of 3* should be chosen.

Pickup: Set operate current in % of *IBase*.

MultPU: The operate current can be changed by activation of the binary input MULTPU to the set factor *MultPU*.

8.1.3.1 Meshed network without parallel line

The following fault calculations have to be done for three-phase, single-phase-to-ground and two-phase-to-ground faults. With reference to figure 261, apply a fault in B and then calculate the current through-fault phase current I_{fB}. The calculation should be done using the minimum source impedance values for Z_A and the maximum source impedance values for Z_B in order to get the maximum through fault current from A to B.

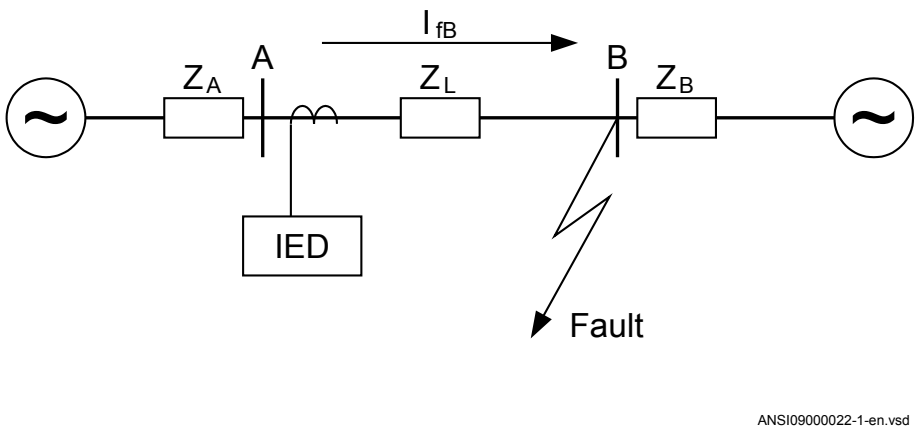

Figure 261: Through fault current from A to B: I_{fB}

Then a fault in A has to be applied and the through fault current I_{fA} has to be calculated, figure 262. In order to get the maximum through fault current, the minimum value for Z_B and the maximum value for Z_A have to be considered.

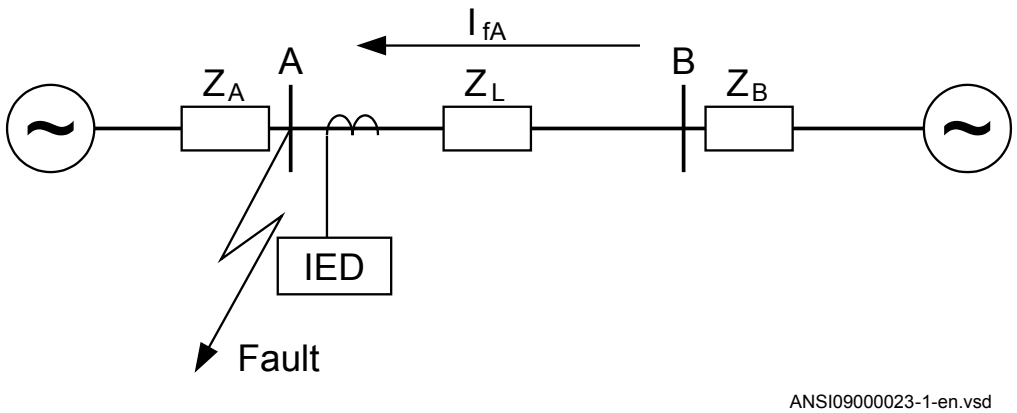

Figure 262: Through fault current from B to A: I_{fA}

The IED must not trip for any of the two through-fault currents. Hence the minimum theoretical current setting (Imin) will be:

$$Imin \geq MAX(I_{fA}, I_{fB})$$

(Equation 463)

A safety margin of 5% for the maximum protection static inaccuracy and a safety margin of 5% for the maximum possible transient overreach have to be introduced. An additional 20% is suggested due to the inaccuracy of the instrument transformers under transient conditions and inaccuracy in the system data.

The minimum primary setting (Is) for the instantaneous phase overcurrent protection 3-phase output is then:

$$I_s \geq 1.3 \cdot I_{min}$$

(Equation 464)

The protection function can be used for the specific application only if this setting value is equal to or less than the maximum fault current that the IED has to clear, I_F in figure 263.

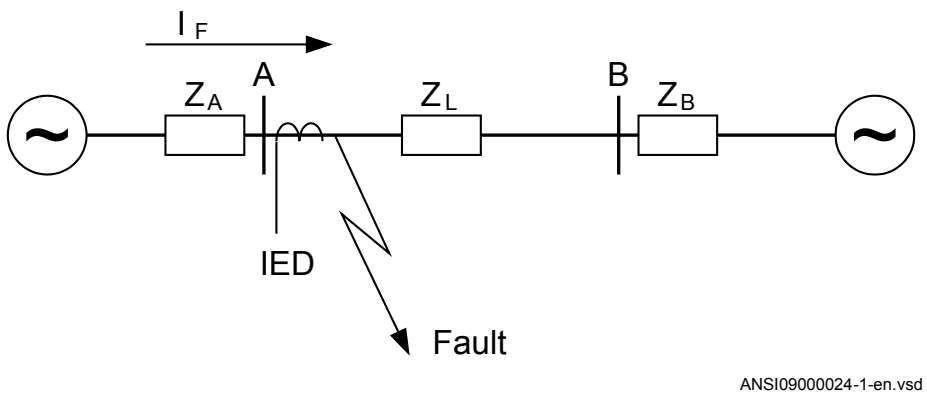

Figure 263: Fault current: I_F

The IED setting value *Pickup* is given in percentage of the primary base current value, *IBase*. The value for *Pickup* is given from this formula:

$$Pickup = \frac{Is}{IBase} \cdot 100$$

(Equation 465)

8.1.3.2 Meshed network with parallel line

In case of parallel lines, the influence of the induced current from the parallel line to the protected line has to be considered. One example is given in figure 264 where the two lines are connected to the same busbars. In this case the influence of the induced fault current from the faulty line (line 1) to the healthy line (line 2) is considered together with the two through fault currents I_{fA} and I_{fB} mentioned previously. The maximal influence from the parallel line for the IED in figure 264 will be with a fault at the C point with the C breaker open.

A fault in C has to be applied, and then the maximum current seen from the IED (I_M) on the healthy line (this applies for single-phase-to-ground and two-phase-to-ground faults) is calculated.

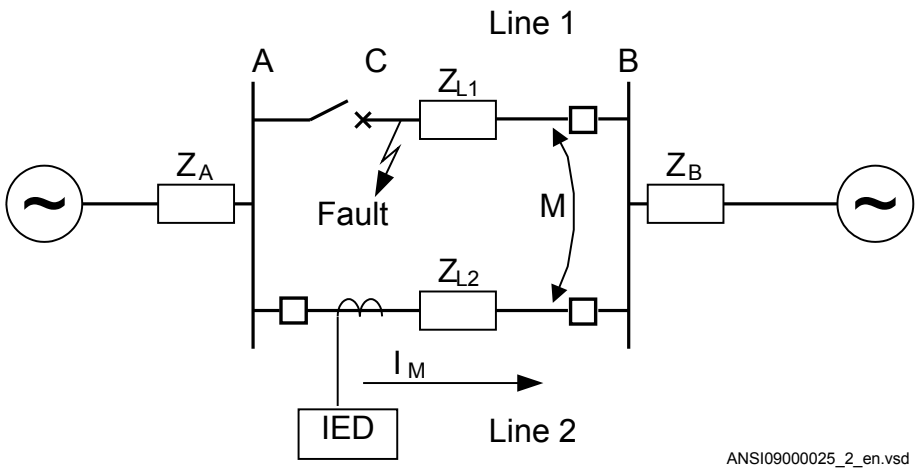

Figure 264: Two parallel lines. Influence from parallel line to the through fault current: I_M

The minimum theoretical current setting for the overcurrent protection function (Imin) will be:

$$Imin \geq MAX(I_{fA}, I_{fB}, I_M)$$

(Equation 466)

Where I_{fA} and I_{fB} have been described in the previous paragraph. Considering the safety margins mentioned previously, the minimum setting (Is) for the instantaneous phase overcurrent protection 3-phase output is then:

$$Is \geq 1.3 \cdot Imin$$

(Equation 467)

The protection function can be used for the specific application only if this setting value is equal or less than the maximum phase fault current that the IED has to clear.

The IED setting value *Pickup* is given in percentage of the primary base current value, *IBase*. The value for *Pickup* is given from this formula:

$$Pickup = \frac{Is}{IBase} \cdot 100$$

(Equation 468)

8.2 Four step phase overcurrent protection 3-phase output OC4PTOC (51/67)

8.2.1 Identification

Function description	IEC 61850 identification	IEC 60617 identification	ANSI/IEEE C37.2 device number
Four step phase overcurrent protection 3-phase output	OC4PTOC	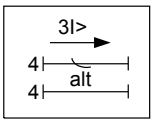	51/67

8.2.2 Application

The Four step phase overcurrent protection 3-phase output OC4PTOC (51_67) is used in several applications in the power system. Some applications are:

- Short circuit protection of feeders in distribution and subtransmission systems. Normally these feeders have radial structure.
- Back-up short circuit protection of transmission lines.
- Back-up short circuit protection of power transformers.
- Short circuit protection of different kinds of equipment connected to the power system such as; shunt capacitor banks, shunt reactors, motors and others.
- Back-up short circuit protection of power generators.

If VT inputs are not available or not connected, setting parameter *DirModeSelx* (*x* = step 1, 2, 3 or 4) shall be left to default value *Non-directional*.

In many applications several steps with different current pick up levels and time delays are needed. OC4PTOC (51_67) can have up to four different, individual settable, steps. The flexibility of each step of OC4PTOC (51_67) is great. The following options are possible:

Non-directional / Directional function: In most applications the non-directional functionality is used. This is mostly the case when no fault current can be fed from the protected object itself. In order to achieve both selectivity and fast fault clearance, the directional function can be necessary.

Choice of delay time characteristics: There are several types of delay time characteristics available such as definite time delay and different types of inverse time delay characteristics. The selectivity between different overcurrent protections is normally enabled by co-ordination between the function time delays of the different protections. To enable optimal co-ordination between all overcurrent protections, they should have the same time delay characteristic. Therefore a wide range of standardized inverse time characteristics are available: IEC and ANSI. It is also possible to tailor make the inverse time characteristic.

Normally it is required that the phase overcurrent protection shall reset as fast as possible when the current level gets lower than the operation level. In some cases some sort of delayed reset is required. Therefore different kinds of reset characteristics can be used.

For some protection applications there can be a need to change the current pick-up level for some time. A typical case is when the protection will measure the current to a large motor. At the start up sequence of a motor the start current can be significantly larger than the rated current of the motor. Therefore there is a possibility to give a setting of a multiplication factor to the current pick-up level. This multiplication factor is activated from a binary input signal to the function.

Power transformers can have a large inrush current, when being energized. This phenomenon is due to saturation of the transformer magnetic core during parts of the period. There is a risk that inrush current will reach levels above the pick-up current of the phase overcurrent protection. The inrush current has a large 2nd harmonic content. This can be used to avoid unwanted operation of the protection. Therefore, OC4PTOC (51/67) have a possibility of 2nd harmonic restrain if the level of this harmonic current reaches a value above a set percentage of the fundamental current.

The phase overcurrent protection is often used as protection for two and three phase short circuits. In some cases it is not wanted to detect single-phase ground faults by the phase overcurrent protection. This fault type is detected and cleared after operation of ground fault protection. Therefore it is possible to make a choice how many phases, at minimum, that have to have current above the pick-up level, to enable operation. If set *1 of 3* it is sufficient to have high current in one phase only. If set *2 of 3* or *3 of 3* single-phase ground faults are not detected.

8.2.3 Setting guidelines

When inverse time overcurrent characteristic is selected, the operate time of the stage will be the sum of the inverse time delay and the set definite time delay. Thus, if only the inverse time delay is required, it is important to set the definite time delay for that stage to zero.

The parameters for Four step phase overcurrent protection 3-phase output OC4PTOC (51/67) are set via the local HMI or PCM600.

The following settings can be done for OC4PTOC (51/67).

GlobalBaseSel: Selects the global base value group used by the function to define (*IBase*), (*VBase*) and (*SBase*).

MeasType: Selection of discrete Fourier filtered (*DFT*) or true RMS filtered (*RMS*) signals. *RMS* is used when the harmonic contents are to be considered, for example in applications with shunt capacitors.

Operation: The protection can be set to *Disabled* or *Enabled*

AngleRCA: Protection characteristic angle set in degrees. If the angle of the fault loop current has the angle RCA the direction to fault is forward.

AngleROA: Angle value, given in degrees, to define the angle sector of the directional function, see figure 265.

PUMinOpPhSel: Minimum current for phase selection set in % of *IBase*. This setting should be less than the lowest step setting. Default setting is 7%.

NumPhSel: Number of phases, with high current, required for operation. The setting possibilities are: *Not used*,*1 out of 3*, *2 out of 3* and *3 out of 3*. Default setting is *1 out of 3*.

2ndHarmStab: Operate level of 2nd harmonic current restrain set in % of the fundamental current. The setting range is *5 - 100*% in steps of 1%. Default setting is 20%.

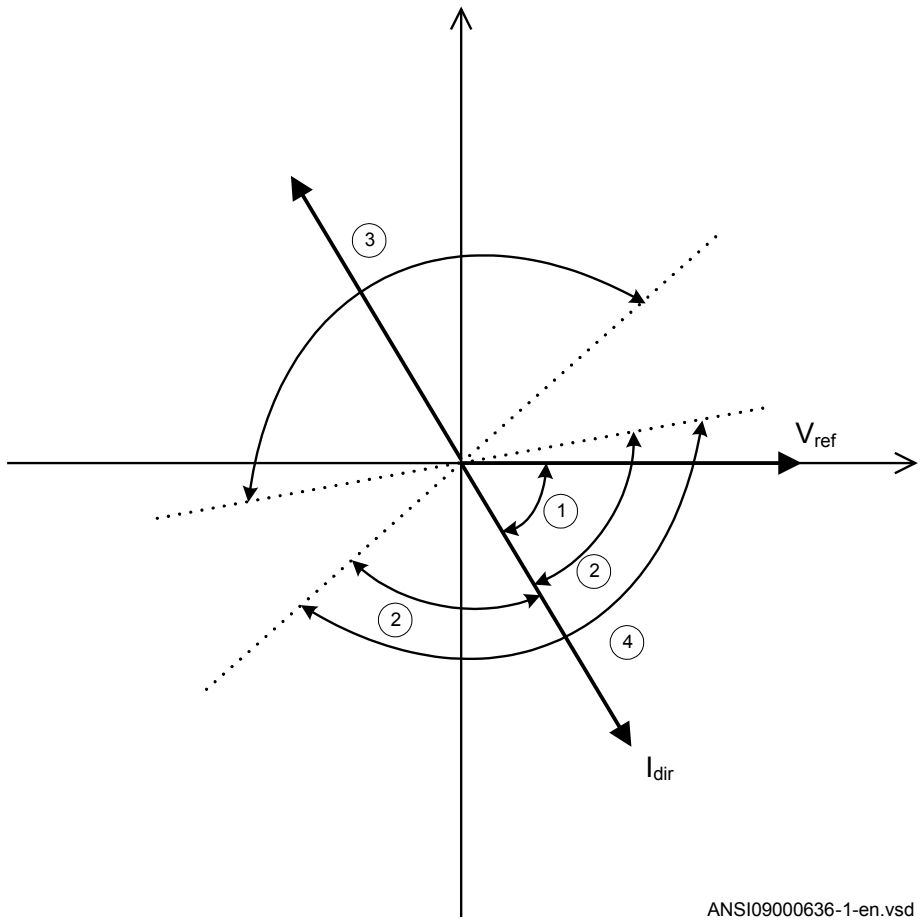

Figure 265: Directional function characteristic

1. RCA = Relay characteristic angle
2. ROA = Relay operating angle
3. Reverse
4. Forward

8.2.3.1 Settings for each step

x means step 1, 2, 3 and 4.

DirModeSelx: The directional mode of step *x*. Possible settings are *Disabled*/*Non-directional*/*Forward*/*Reverse*.

Characteristx: Selection of time characteristic for step *x*. Definite time delay and different types of inverse time characteristics are available according to table 31.

Table 31: Inverse time characteristics

Curve name
ANSI Extremely Inverse
ANSI Very Inverse
ANSI Normal Inverse
ANSI Moderately Inverse
ANSI/IEEE Definite time
ANSI Long Time Extremely Inverse
ANSI Long Time Very Inverse
ANSI Long Time Inverse
IEC Normal Inverse
IEC Very Inverse
IEC Inverse
IEC Extremely Inverse
IEC Short Time Inverse
IEC Long Time Inverse
IEC Definite Time
User Programmable
ASEA RI
RXIDG (logarithmic)

The different characteristics are described in Technical reference manual.

Pickupx: Operate phase current level for step *x* given in % of *IBase*.

tx: Definite time delay for step *x*. Used if definite time characteristic is chosen.

TDx: Time multiplier for inverse time delay for step *x*.

IMinx: Minimum operate current for step *x* in % of *IBase*. Set *IMinx* below *Pickupx* for every step to achieve ANSI reset characteristic according to standard. If *IMinx* is set above *Pickupx* for any step the ANSI reset works as if current is zero when current drops below *IMinx*.

MultPUx: Multiplier for scaling of the current setting value. If a binary input signal (enableMultiplier) is activated the current operation level is increase by this setting constant. Setting range: 1.0-10.0

txMin: Minimum operate time for all inverse time characteristics. At high currents the inverse time characteristic might give a very short operation time. By setting this parameter the operation time of the step can never be shorter than the setting. Setting range: 0.000 - 60.000s in steps of 0.001s.

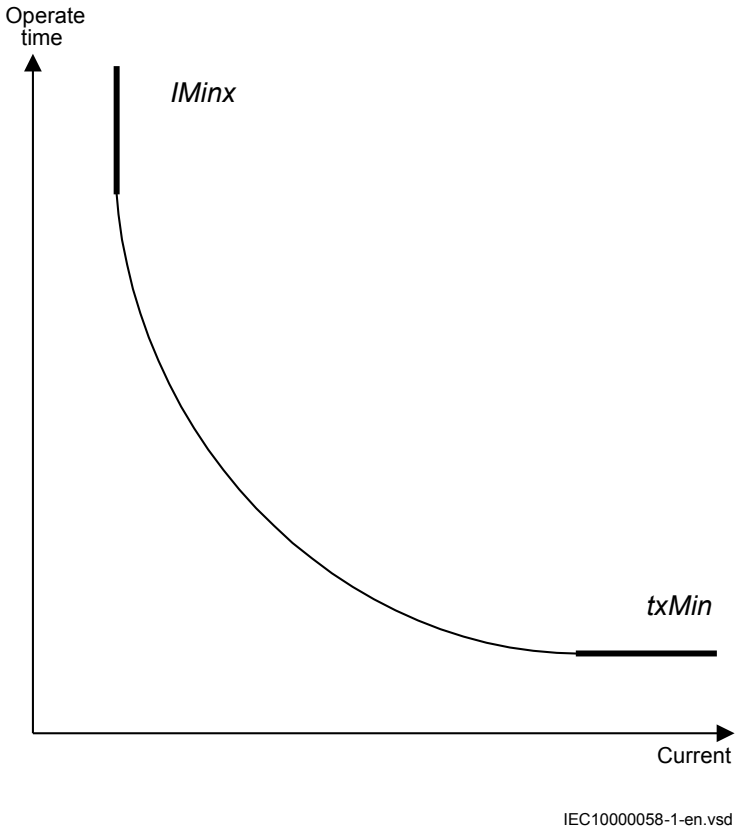

Figure 266: Minimum operate current and operation time for inverse time characteristics

In order to fully comply with curves definition setting parameter *txMin* shall be set to the value, which is equal to the operating time of the selected inverse curve for measured current of twenty times the set current pickup value. Note that the operating time value is dependent on the selected setting value for time multiplier *kx*.

ResetTypeCrvx: The reset of the delay timer can be made in different ways. By choosing setting the possibilities are according to table 32.

Table 32: Reset possibilities

Curve name	Curve index no.
Instantaneous	1
IEC Reset (constant time)	2
ANSI Reset (inverse time)	3

The delay characteristics are described in the technical reference manual. There are some restrictions regarding the choice of reset delay.

For the definite time delay characteristics the possible delay time settings are instantaneous (1) and IEC (2 = set constant time reset).

For ANSI inverse time characteristics all three types of reset time characteristics are available; instantaneous (1), IEC (2 = set constant time reset) and ANSI (3 = current dependent reset time).

For IEC inverse time characteristics the possible delay time settings are instantaneous (1) and IEC (2 = set constant time reset).

For the customer tailor made inverse time delay characteristics (type 17) all three types of reset time characteristics are available; instantaneous (1), IEC (2 = set constant time reset) and ANSI (3 = current dependent reset time). If the current dependent type is used settings pr, tr and cr must be given.

HarmRestrainx: Enable block of step *x* from the harmonic restrain function (2nd harmonic). This function should be used when there is a risk if power transformer inrush currents might cause unwanted trip. Can be set *Disabled*/*Enabled*.

tPCrvx, *tACrvx*, *tBCrvx*, *tCCrvx*: Parameters for customer creation of inverse time characteristic curve (Curve type = 17). See equation 469 for the time characteristic equation.

$$t[s] = \left(\frac{A}{\left(\frac{i}{in>}\right)^{p} - C} + B \right) \cdot MultPUx$$

(Equation 469)

For more information, refer to the technical reference manual.

tPRCrvx, *tTRCrvx*, *tCRCrvx*: Parameters for customer creation of inverse reset time characteristic curve (Reset Curve type = 3). Further description can be found in the technical reference manual.

8.2.3.2 2nd harmonic restrain

If a power transformer is energized there is a risk that the transformer core will saturate during part of the period, resulting in an inrush transformer current. This will give a declining residual current in the network, as the inrush current is deviating between the phases. There is a risk that the phase overcurrent function will give an unwanted trip.

The inrush current has a relatively large ratio of 2nd harmonic component. This component can be used to create a restrain signal to prevent this unwanted function.

The settings for the 2nd harmonic restrain are described below.

2ndHarmStab: The rate of 2nd harmonic current content for activation of the 2nd harmonic restrain signal, to block chosen steps. The setting is given in % of the fundamental frequency residual current. The setting range is *5 - 100*% in steps of 1%. The default setting is 20% and can be used if a deeper investigation shows that no other value is needed..

HarmRestrainx: This parameter can be set *Disabled*/*Enabled*, to disable or enable the 2nd harmonic restrain.

The four step phase overcurrent protection 3-phase output can be used in different ways, depending on the application where the protection is used. A general description is given below.

The pickup current setting of the inverse time protection, or the lowest current step of the definite time protection, must be defined so that the highest possible load current does not cause protection operation. Here consideration also has to be taken to the protection reset current, so that a short peak of overcurrent does not cause operation of the protection even when the overcurrent has ceased. This phenomenon is described in figure 267.

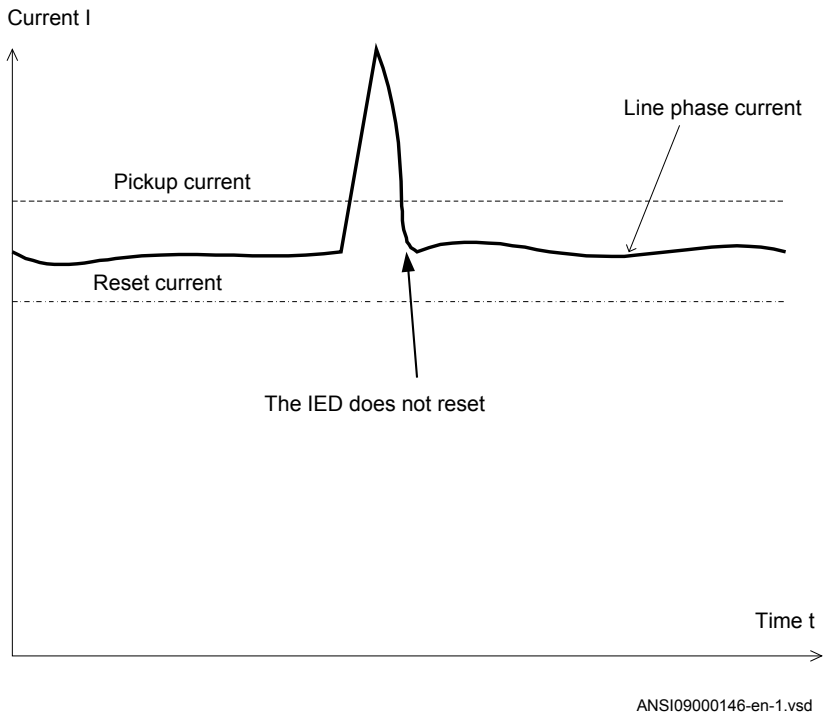

Figure 267: Pickup and reset current for an overcurrent protection

The lowest setting value can be written according to equation 470.

$$Ipu \geq 1.2 \cdot \frac{Imax}{k}$$

(Equation 470)

where:

1.2	is a safety factor
k	is the resetting ratio of the protection
Imax	is the maximum load current

From operation statistics the load current up to the present situation can be found. The current setting must be valid also for some years ahead. It is, in most cases, realistic that the setting values are updated not more often than once every five years. In many cases this time interval is still longer. Investigate the maximum load current that different equipment on the line can withstand. Study components such as line conductors, current transformers, circuit breakers, and disconnectors. The manufacturer of the equipment normally gives the maximum thermal load current of the equipment.

The maximum load current on the line has to be estimated. There is also a demand that all faults, within the zone that the protection shall cover, must be detected by the phase overcurrent protection. The minimum fault current Iscmin, to be detected by the protection, must be calculated. Taking this value as a base, the highest pick up current setting can be written according to equation 471.

$$\mathrm{Ipu} \le 0.7 \cdot \mathrm{Isc\,min}$$

(Equation 471)

where:

0.7	is a safety factor
Iscmin	is the smallest fault current to be detected by the overcurrent protection.

As a summary the pickup current shall be chosen within the interval stated in equation 472.

$$1.2 \cdot \frac{\mathrm{Im\,ax}}{\mathrm{k}} \le \mathrm{Ipu} \le 0.7 \cdot \mathrm{Isc\,min}$$

(Equation 472)

The high current function of the overcurrent protection, which only has a short delay of the operation, must be given a current setting so that the protection is selective to other protection in the power system. It is desirable to have a rapid tripping of faults within as large portion as possible of the part of the power system to be protected by the protection (primary protected zone). A fault current calculation gives the largest current of faults, Iscmax, at the most remote part of the primary protected zone. Considerations have to be made to the risk of transient overreach, due to a possible DC component of the short circuit current. The lowest current setting of the most rapid stage, of the phase overcurrent protection, can be written according to

$$I_{high} \ge 1.2 \cdot k_t \cdot I_{sc\max}$$

(Equation 473)

where:

1.2	is a safety factor
k_t	is a factor that takes care of the transient overreach due to the DC component of the fault current and can be considered to be less than 1.05
Iscmax	is the largest fault current at a fault at the most remote point of the primary protection zone.

The operate times of the phase overcurrent protection has to be chosen so that the fault time is so short that protected equipment will not be destroyed due to thermal overload, at the same time as selectivity is assured. For overcurrent protection, in a radial fed network, the time setting can be chosen in a graphical way. This is mostly used in the case of inverse time overcurrent protection. Figure 268 shows how the time-versus-current curves are plotted in a diagram. The time setting is chosen to get the shortest fault time with maintained selectivity. Selectivity is assured if the time difference between the curves is larger than a critical time difference.

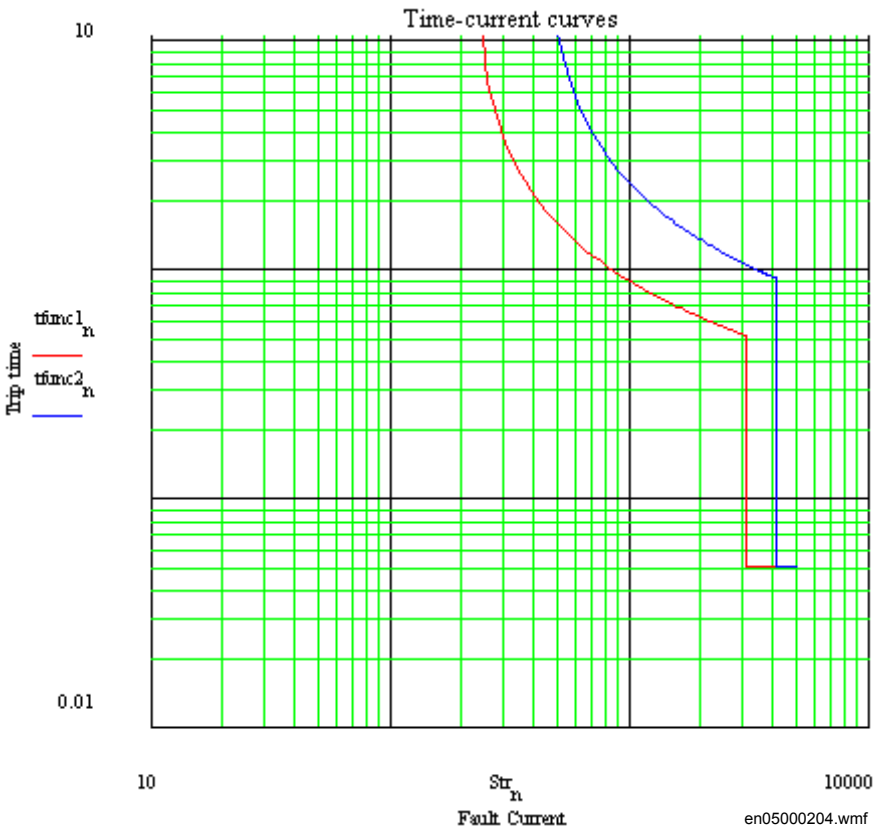

Figure 268: Fault time with maintained selectivity

The operation time can be set individually for each overcurrent protection.

To assure selectivity between different protections, in the radial network, there have to be a minimum time difference Δt between the time delays of two protections. The minimum time difference can be determined for different cases. To determine the shortest possible time difference, the operation time of protections, breaker opening time and protection resetting time must be known. These time delays can vary significantly between different protective equipment. The following time delays can be estimated:

Protection operation time:	15-60 ms
Protection resetting time:	15-60 ms
Breaker opening time:	20-120 ms

Example for time coordination

Assume two substations A and B directly connected to each other via one line, as shown in the figure 269. Consider a fault located at another line from the station B. The fault current to the overcurrent protection of IED B1 has a magnitude so that the protection will have instantaneous function. The overcurrent protection of IED A1 must have a delayed function. The sequence of events during the fault can be described using a time axis, see figure 269.

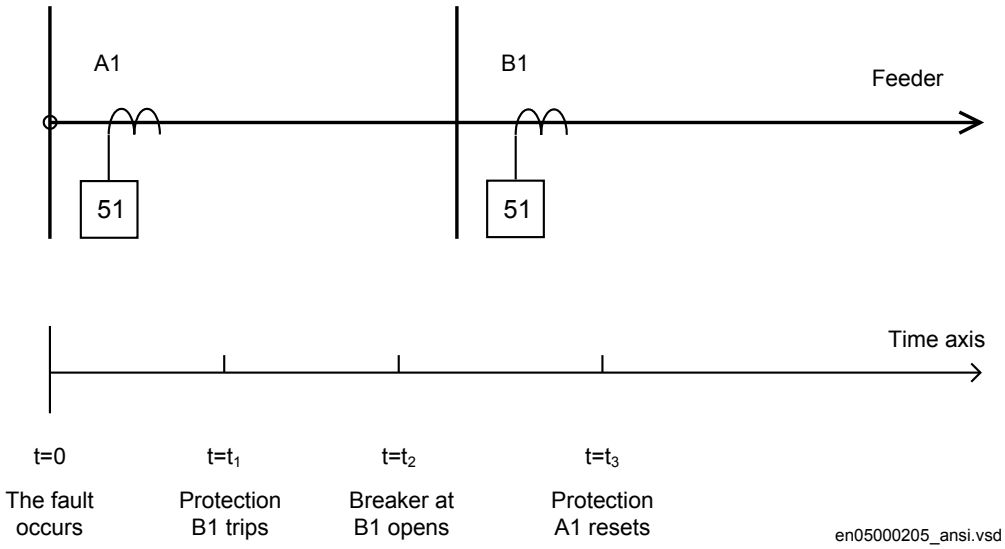

Figure 269: Sequence of events during fault

where:

t=0	is when the fault occurs
$t=t_1$	is when the trip signal from the overcurrent protection at IED B1 is sent to the circuit breaker. The operation time of this protection is t_1
$t=t_2$	is when the circuit breaker at IED B1 opens. The circuit breaker opening time is $t_2 - t_1$
$t=t_3$	is when the overcurrent protection at IED A1 resets. The protection resetting time is $t_3 - t_2$.

To ensure that the overcurrent protection at IED A1, is selective to the overcurrent protection at IED B1, the minimum time difference must be larger than the time t_3.

There are uncertainties in the values of protection operation time, breaker opening time and protection resetting time. Therefore a safety margin has to be included. With normal values the needed time difference can be calculated according to equation 474.

$$\Delta t \geq 40\,ms + 100\,ms + 40\,ms + 40\,ms = 220\,ms$$

(Equation 474)

where it is considered that:	
the operate time of overcurrent protection B1	is 40 ms
the breaker open time	is 100 ms
the resetting time of protection A1	is 40 ms and
the additional margin	is 40 ms

8.3 Instantaneous residual overcurrent protection EFPIOC (50N)

8.3.1 Identification

Function description	IEC 61850 identification	IEC 60617 identification	ANSI/IEEE C37.2 device number
Instantaneous residual overcurrent protection	EFPIOC	*IN*>>	50N

8.3.2 Application

In many applications, when fault current is limited to a defined value by the object impedance, an instantaneous ground-fault protection can provide fast and selective tripping.

The Instantaneous residual overcurrent EFPIOC (50N), which can operate in 15 ms (50 Hz nominal system frequency) for faults characterized by very high currents, is included in the IED.

8.3.3 Setting guidelines

The parameters for the Instantaneous residual overcurrent protection EFPIOC (50N) are set via the local HMI or PCM600.

Some guidelines for the choice of setting parameter for EFPIOC (50N) is given.

GlobalBaseSel: Selects the global base value group used by the function to define (*IBase*), (*VBase*) and (*SBase*).

The setting of the function is limited to the operate residual current to the protection (*Pickup*).

The basic requirement is to assure selectivity, that is EFPIOC (50N) shall not be allowed to operate for faults at other objects than the protected object (line).

For a normal line in a meshed system single phase-to-ground faults and phase-to-phase-to-ground faults shall be calculated as shown in figure 270 and figure 271. The residual currents ($3I_0$) to the protection are calculated. For a fault at the remote line end this fault current is I_{fB}. In this calculation the operational state with high source impedance Z_A and low source impedance Z_B should be used. For the fault at the home busbar this fault current is I_{fA}. In this calculation the operational state with low source impedance Z_A and high source impedance Z_B should be used.

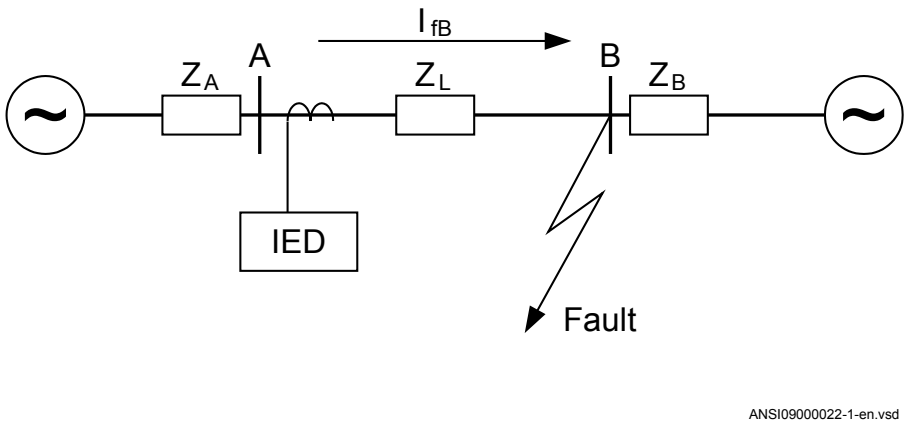

Figure 270: Through fault current from A to B: I_{fB}

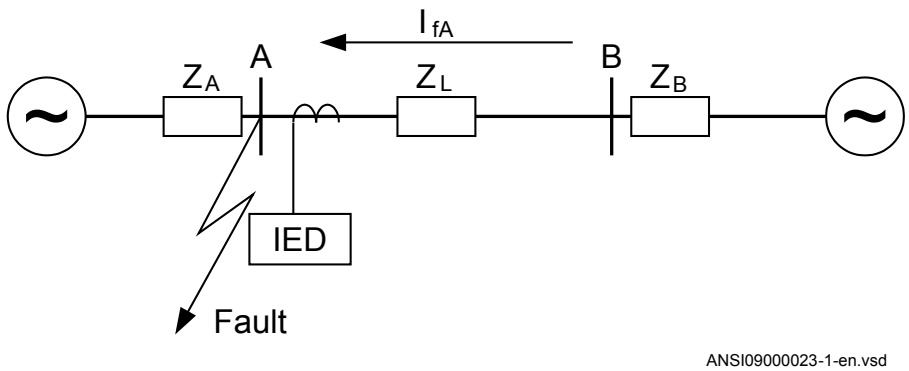

Figure 271: Through fault current from B to A: I_{fA}

The function shall not operate for any of the calculated currents to the protection. The minimum theoretical current setting (Imin) will be:

$$Imin \geq MAX(I_{fA}, I_{fA})$$

(Equation 475)

A safety margin of 5% for the maximum static inaccuracy and a safety margin of 5% for maximum possible transient overreach have to be introduced. An additional 20% is suggested due to inaccuracy of instrument transformers under transient conditions and inaccuracy in the system data.

The minimum primary current setting (Is) is:

$$I_s = 1.3 \times I_{min}$$

(Equation 476)

In case of parallel lines with zero sequence mutual coupling a fault on the parallel line, as shown in figure 272, should be calculated.

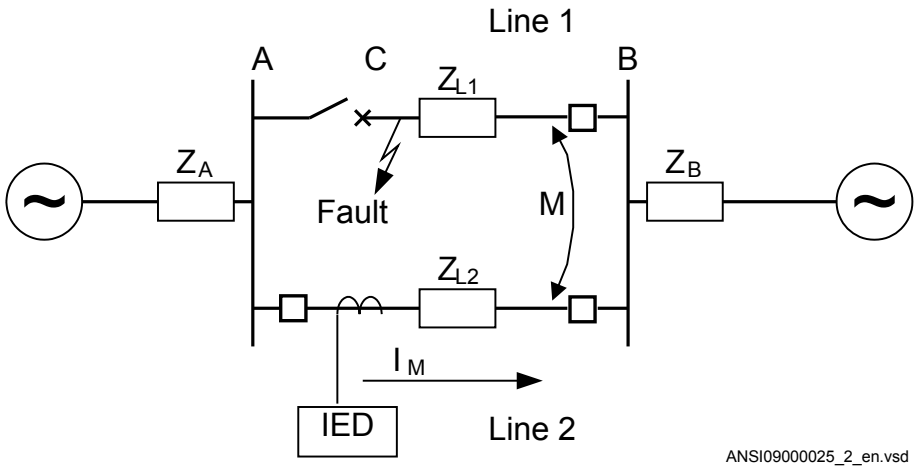

Figure 272: Two parallel lines. Influence from parallel line to the through fault current: I_M

The minimum theoretical current setting (Imin) will in this case be:

$$Imin \geq MAX(I_{fA}, I_{fB}, I_M)$$

(Equation 477)

Where:

I_{fA} and I_{fB} have been described for the single line case.

Considering the safety margins mentioned previously, the minimum setting (Is) is:

$$I_s = 1.3 \times I_{min}$$

(Equation 478)

Transformer inrush current shall be considered.

The setting of the protection is set as a percentage of the base current (*IBase*).

Operation: set the protection to *Enabled* or *Disabled*.

Pickup: Set operate current in % of *IBase*.

MultPU: The operate current can be changed by activation of the binary input MULTPU to the set factor *MultPU*.

8.4 Four step residual overcurrent protection, (Zero sequence or negative sequence directionality) EF4PTOC (51N/67N)

8.4.1 Identification

Function description	IEC 61850 identification	IEC 60617 identification	ANSI/IEEE C37.2 device number
Four step residual overcurrent protection	EF4PTOC	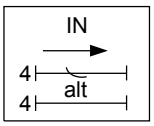	51N/67N

8.4.2 Application

The four step residual overcurrent protection EF4PTOC (51N_67N) is used in several applications in the power system. Some applications are:

- Ground-fault protection of feeders in effectively grounded distribution and subtransmission systems. Normally these feeders have radial structure.
- Back-up ground-fault protection of transmission lines.
- Sensitive ground-fault protection of transmission lines. EF4PTOC (51N_67N) can have better sensitivity to detect resistive phase-to-ground-faults compared to distance protection.
- Back-up ground-fault protection of power transformers.
- Ground-fault protection of different kinds of equipment connected to the power system such as shunt capacitor banks, shunt reactors and others.

In many applications several steps with different current pickup levels and time delays are needed. EF4PTOC (51N_67N) can have up to four, individual settable steps. The flexibility of each step of EF4PTOC (51N_67N) is great. The following options are possible:

Non-directional/Directional function: In some applications the non-directional functionality is used. This is mostly the case when no fault current can be fed from the protected object itself. In order to achieve both selectivity and fast fault clearance, the directional function can be necessary. This can be the case for ground-fault protection in meshed and effectively grounded transmission systems. The directional residual overcurrent protection is also well suited to operate in teleprotection communication schemes, which enables fast clearance of ground faults on transmission lines. The

directional function uses the polarizing quantity as decided by setting. Voltage polarizing is most commonly used, but alternatively current polarizing where currents in transformer neutrals providing the neutral source (ZN) is used to polarize (IN · ZN) the function. Dual polarizing where the sum of both voltage and current components is allowed to polarize can also be selected.

Choice of time characteristics: There are several types of time characteristics available such as definite time delay and different types of inverse time characteristics. The selectivity between different overcurrent protections is normally enabled by co-ordination between the operate time of the different protections. To enable optimal co-ordination all overcurrent protections, to be co-ordinated against each other, should have the same time characteristic. Therefore a wide range of standardized inverse time characteristics are available: IEC and ANSI.

Table 33: Time characteristics

Curve name
ANSI Extremely Inverse
ANSI Very Inverse
ANSI Normal Inverse
ANSI Moderately Inverse
ANSI/IEEE Definite time
ANSI Long Time Extremely Inverse
ANSI Long Time Very Inverse
ANSI Long Time Inverse
IEC Normal Inverse
IEC Very Inverse
IEC Inverse
IEC Extremely Inverse
IEC Short Time Inverse
IEC Long Time Inverse
IEC Definite Time
User Programmable
ASEA RI
RXIDG (logarithmic)

It is also possible to tailor make the inverse time characteristic.

Normally it is required that EF4PTOC (51N_67N) shall reset as fast as possible when the current level gets lower than the operation level. In some cases some sort of delayed reset is required. Therefore different kinds of reset characteristics can be used.

For some protection applications there can be a need to change the current pickup level for some time. Therefore there is a possibility to give a setting of a multiplication factor *INxMult* to the residual current pick-up level. This multiplication factor is activated from a binary input signal MULTPUx to the function.

Power transformers can have a large inrush current, when being energized. This inrush current can have residual current components. The phenomenon is due to saturation of the transformer magnetic core during parts of the cycle. There is a risk that inrush current will give a residual current that reaches level above the pickup current of the residual overcurrent protection. The inrush current has a large second harmonic content. This can be used to avoid unwanted operation of the protection. Therefore, EF4PTOC (51N_67N) has a possibility of second harmonic restrain *2ndHarmStab* if the level of this harmonic current reaches a value above a set percentage of the fundamental current.

8.4.3 Setting guidelines

When inverse time overcurrent characteristic is selected, the operate time of the stage will be the sum of the inverse time delay and the set definite time delay. Thus, if only the inverse time delay is required, it is of utmost importance to set the definite time delay for that stage to zero.

The parameters for the four step residual overcurrent protection, zero or negative sequence direction EF4PTOC (51N/67N) are set via the local HMI or PCM600.

The following settings can be done for the four step residual overcurrent protection.

GlobalBaseSel: Selects the global base value group used by the function to define (*IBase*), (*VBase*) and (*SBase*).

Operation: Sets the protection to *Enabled* or *Disabled*.

8.4.3.1 Settings for each step (x = 1, 2, 3 and 4)

DirModeSelx: The directional mode of step *x*. Possible settings are *Disabled*/*Non-directional*/*Forward*/*Reverse*.

Characteristx: Selection of time characteristic for step *x*. Definite time delay and different types of inverse time characteristics are available.

Inverse time characteristic enables fast fault clearance of high current faults at the same time as selectivity to other inverse time phase overcurrent protections can be assured. This is mainly used in radial fed networks but can also be used in meshed networks. In meshed networks the settings must be based on network fault calculations.

To assure selectivity between different protections, in the radial network, there have to be a minimum time difference Δt between the time delays of two protections. The minimum time difference can be determined for different cases. To determine the shortest possible time difference, the operation time of protections, breaker opening time and protection resetting time must be known. These time delays can vary significantly between different protective equipment. The following time delays can be estimated:

Protection operate time:	15-60 ms
Protection resetting time:	15-60 ms
Breaker opening time:	20-120 ms

The different characteristics are described in the technical reference manual.

Pickup"x": Operate residual current level for step *x* given in % of *IBase*.

kx: Time multiplier for the dependent (inverse) characteristic for step *x*.

IMinx: Minimum operate current for step *x* in % of *IBase*. Set *IMinx* below *Pickupx* for every step to achieve ANSI reset characteristic according to standard. If *IMinx* is set above for any step then signal will reset at current equals to zero.

INxMult: Multiplier for scaling of the current setting value. If a binary input signal (MULTPUx) is activated the current operation level is increased by this setting constant.

txMin: Minimum operating time for inverse time characteristics. At high currents the inverse time characteristic might give a very short operation time. By setting this parameter the operation time of the step can never be shorter than the setting.

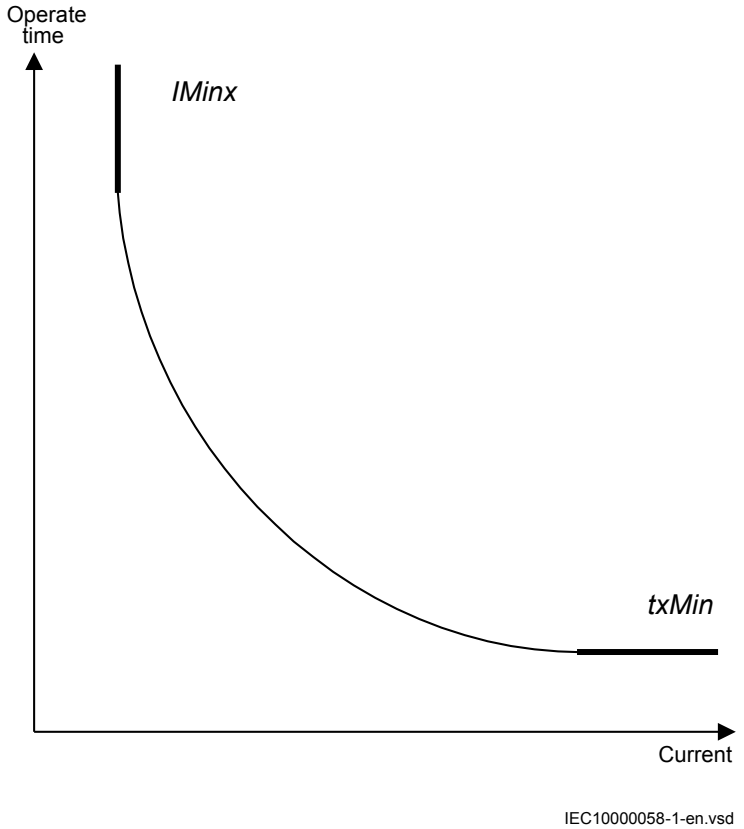

Figure 273: Minimum operate current and operate time for inverse time characteristics

In order to fully comply with curves definition the setting parameter *txMin* shall be set to the value which is equal to the operate time of the selected IEC inverse curve for measured current of twenty times the set current pickup value. Note that the operate time value is dependent on the selected setting value for time multiplier *kx*.

ResetTypeCrvx: The reset of the delay timer can be made in different ways. The possibilities are described in the technical reference manual.

tPCrvx, tACrvx, tBCrvx, tCCrvx: Parameters for user programmable of inverse time characteristic curve. The time characteristic equation is according to equation 479:

$$t[s] = \left(\frac{A}{\left(\frac{i}{ipickup} \right)^{p} - C} + B \right) \cdot TD$$

(Equation 479)

Further description can be found in the technical reference manual.

tPRCrvx, tTRCrvx, tCRCrvx: Parameters for user programmable of inverse reset time characteristic curve. Further description can be found in the technical reference manual.

8.4.3.2 Common settings for all steps

tx: Definite time delay for step *x*. Used if definite time characteristic is chosen.

AngleRCA: Relay characteristic angle given in degree. This angle is defined as shown in figure 274. The angle is defined positive when the residual current lags the reference voltage (Vpol = $3V_0$ or V_2)

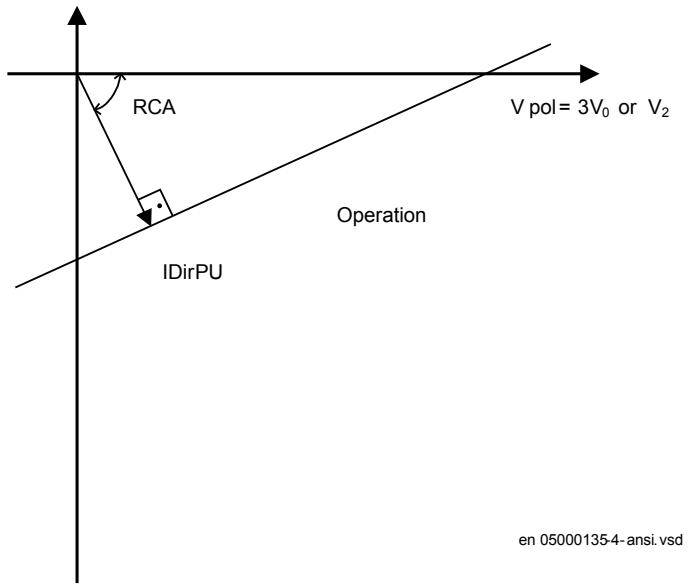

Figure 274: Relay characteristic angle given in degree

In a normal transmission network a normal value of RCA is about 65°. The setting range is -180° to +180°.

polMethod: Defines if the directional polarization is from

- *Voltage* ($3V_0$ or V_2)
- *Current* ($3I_0 \cdot$ ZNpol or $3I_2 \cdot$ZNpol where ZNpol is RNpol + jXNpol), or
- both currents and voltage, *Dual* (dual polarizing, ($3V_0 + 3I_0 \cdot$ ZNpol) or ($V_2 + I_2 \cdot$ ZNpol)).

Normally voltage polarizing from the internally calculated residual sum or an external open delta is used.

Current polarizing is useful when the local source is strong and a high sensitivity is required. In such cases the polarizing voltage ($3V_0$) can be below 1% and it is then necessary to use current polarizing or dual polarizing. Multiply the required set current (primary) with the minimum impedance (ZNpol) and check that the percentage of the phase-to-ground voltage is definitely higher than 1% (minimum $3V_0$>*VPolMin* setting) as a verification.

RNPol, XNPol: The zero-sequence source is set in primary ohms as base for the current polarizing. The polarizing voltage is then achieved as $3I_0 \cdot$ ZNpol. The ZNpol can be defined as $(ZS_1\text{-}ZS_0)/3$, that is the ground return impedance of the source behind the protection. The maximum ground-fault current at the local source can be used to calculate the value of ZN as $V/(\sqrt{3} \cdot 3I_0)$ Typically, the minimum ZNPol ($3 \cdot$ zero sequence source) is set. Setting is in primary ohms.

When the dual polarizing method is used it is important that the setting*Pickupx*or the product $3I_0 \cdot$ ZNpol is not greater than $3V_0$. If so, there is a risk for incorrect operation for faults in the reverse direction.

IPolMin: is the minimum ground-fault current accepted for directional evaluation. For smaller currents than this value the operation will be blocked. Typical setting is 5-10% of *IBase*.

VPolMin: Minimum polarization (reference) polarizing voltage for the directional function, given in % of *VBase*/√3.

IDirPU: Operate residual current release level in % of *IBase* for directional comparison scheme. The setting is given in % of *IBase* and must be set below the lowest *INx*> setting, set for the directional measurement. The output signals, PUFW and PUREV can be used in a teleprotection scheme. The appropriate signal should be configured to the communication scheme block.

8.4.3.3 2nd harmonic restrain

If a power transformer is energized there is a risk that the current transformer core will saturate during part of the period, resulting in a transformer inrush current. This will give a declining residual current in the network, as the inrush current is deviating between the phases. There is a risk that the residual overcurrent function will give an unwanted trip. The inrush current has a relatively large ratio of 2nd harmonic component. This component can be used to create a restrain signal to prevent this unwanted function.

At current transformer saturation a false residual current can be measured by the protection. Also here the 2nd harmonic restrain can prevent unwanted operation.

2ndHarmStab: The rate of 2nd harmonic current content for activation of the 2nd harmonic restrain signal. The setting is given in % of the fundamental frequency residual current.

HarmRestrainx: Enable block of step *x* from the harmonic restrain function.

8.4.3.4 Parallel transformer inrush current logic

In case of parallel transformers there is a risk of sympathetic inrush current. If one of the transformers is in operation, and the parallel transformer is switched in, the asymmetric inrush current of the switched in transformer will cause partial saturation of the transformer already in service. This is called transferred saturation. The 2nd harmonic of the inrush currents of the two transformers will be in phase opposition. The summation of the two currents will thus give a small 2nd harmonic current. The residual fundamental current will however be significant. The inrush current of the transformer in service before the parallel transformer energizing, will be a little delayed compared to the first transformer. Therefore we will have high 2nd harmonic current initially. After a short period this current will however be small and the normal 2nd harmonic blocking will reset.

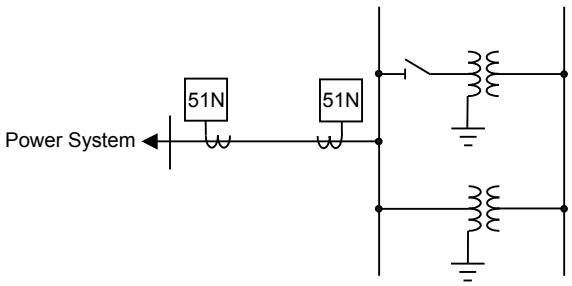

Figure 275: Application for parallel transformer inrush current logic

If the *BlkParTransf* function is activated the 2nd harmonic restrain signal will latch as long as the residual current measured by the relay is larger than a selected step current level. Assume that step 4 is chosen to be the most sensitive step of the four step residual overcurrent protection function EF4PTOC (51N_67N). The harmonic restrain blocking is enabled for this step. Also the same current setting as this step is chosen for the blocking at parallel transformer energizing.

Below the settings for the parallel transformer logic are described.

Use_PUValue: Gives which current level that should be used for activation of the blocking signal. This is given as one of the settings of the steps: Step 1/2/3/4. Normally the step having the lowest operation current level should be set.

BlkParTransf: This parameter can be set *Disable*/*Enable*, the parallel transformer logic.

8.4.3.5 Switch onto fault logic

In case of energizing a faulty object there is a risk of having a long fault clearance time, if the fault current is too small to give fast operation of the protection. The switch on to fault function can be activated from auxiliary signals from the circuit breaker, either the close command or the open/close position (change of position).

This logic can be used to issue fast trip if one breaker pole does not close properly at a manual or automatic closing.

SOTF and Under Time are similar functions to achieve fast clearance at asymmetrical closing based on requirements from different utilities.

The function is divided into two parts. The SOTF function will give operation from step 2 or 3 during a set time after change in the position of the circuit breaker. The SOTF function has a set time delay. The Under Time function, which has 2nd harmonic restrain blocking, will give operation from step 4. The 2nd harmonic restrain will prevent unwanted function in case of transformer inrush current. The Under Time function has a set time delay.

Below the settings for switch on to fault logics are described.

SOTF operation mode: This parameter can be set: *Disabled/SOTF/Under Time/SOTF +Under Time*.

SOTFSel: This setting will select the signal to activate SOTF function; *CB position open/ CB position closed/CB close command*.

tSOTF: Time delay for operation of the SOTF function. The setting range is 0.000 - 60.000 s in step of 0.001 s. The default setting is 0.100 s

StepForSOTF: If this parameter is set on the step 3 pickup signal will be used as current set level. If set disabled step 2 pickup signal will be used as current set level.

t4U: Time interval when the SOTF function is active after breaker closing. The setting range is 0.000 - 60.000 s in step of 0.001 s. The default setting is 1.000 s.

ActUndrTimeSel: Describes the mode to activate the sensitive undertime function. The function can be activated by Circuit breaker position (change) or Circuit breaker command.

tUnderTime: Time delay for operation of the sensitive undertime function. The setting range is 0.000 - 60.000 s in step of 0.001 s. The default setting is 0.300 s

8.4.3.6 Line application example

The Four step residual overcurrent protection EF4PTOC (51N/67N) can be used in different ways. Below is described one application possibility to be used in meshed and effectively grounded systems.

The protection measures the residual current out on the protected line. The protection function has a directional function where the polarizing voltage (zero-sequence voltage) is the polarizing quantity.

The polarizing voltage and current can be internally generated when a three-phase set of voltage transformers and current transformers are used.

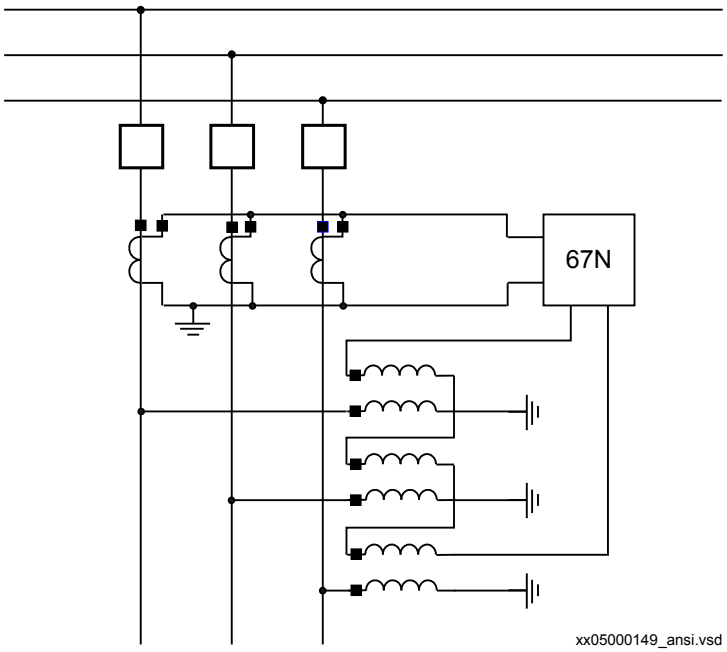

Figure 276: Connection of polarizing voltage from an open (ANSI-broken) delta

The different steps can be described as follows.

Step 1

This step has directional instantaneous function. The requirement is that overreaching of the protected line is not allowed.

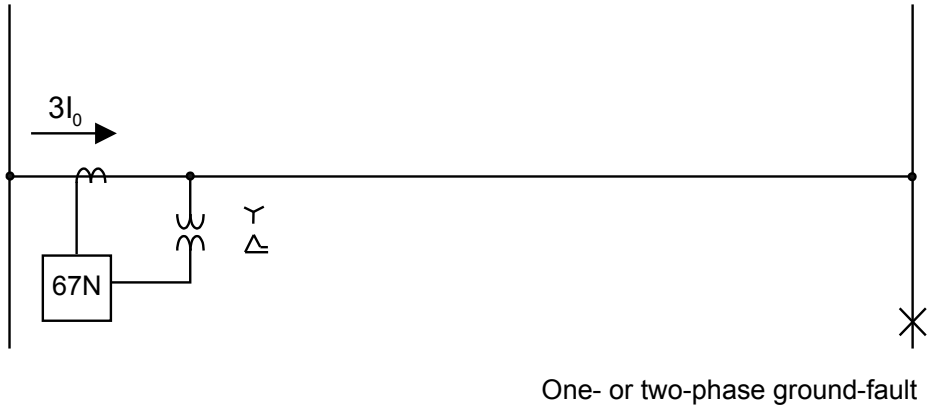

Figure 277: Step 1, first calculation

The residual current out on the line is calculated at a fault on the remote busbar (one- or two-phase-to-ground fault). To assure selectivity it is required that step 1 shall not give a trip at this fault. The requirement can be formulated according to equation 480.

$$I_{step1} \geq 1.2 \cdot 3I_0 \text{ (remote busbar)}$$

(Equation 480)

As a consequence of the distribution of zero sequence current in the power system, the current to the protection might be larger if one line out from the remote busbar is taken out of service, see figure 278.

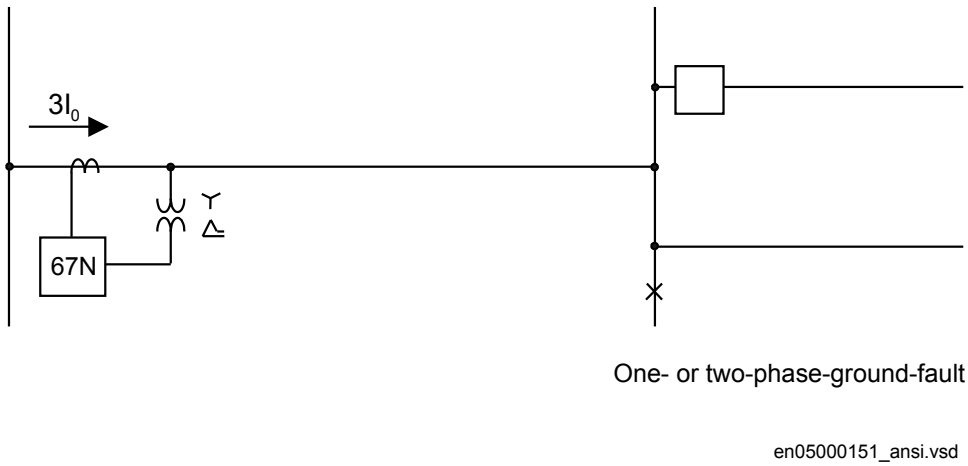

Figure 278: Step 1, second calculation. Remote busbar with, one line taken out of service

The requirement is now according to equation 481.

$$I_{step1} \geq 1.2 \cdot 3I_0 \text{ (remote busbar with one line out)}$$

(Equation 481)

A higher value of step 1 might be necessary if a big power transformer (Y0/D) at remote bus bar is disconnected.

A special case occurs at double circuit lines, with mutual zero-sequence impedance between the parallel lines, see figure 279.

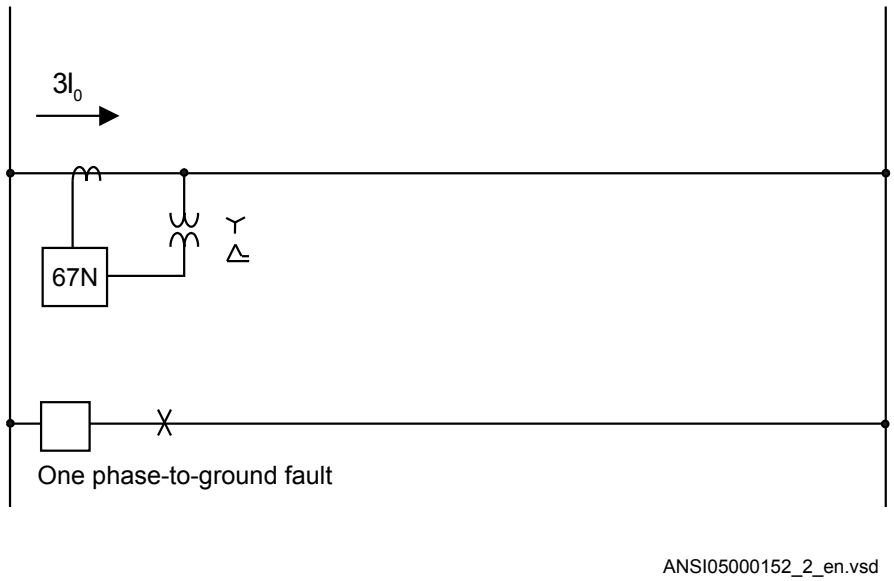

Figure 279: Step 1, third calculation

In this case the residual current out on the line can be larger than in the case of ground fault on the remote busbar.

$$I_{step1} \geq 1.2 \cdot 3I_0$$

(Equation 482)

The current setting for step 1 is chosen as the largest of the above calculated residual currents, measured by the protection.

Step 2

This step has directional function and a short time delay, often about 0.4 s. Step 2 shall securely detect all ground faults on the line, not detected by step 1.

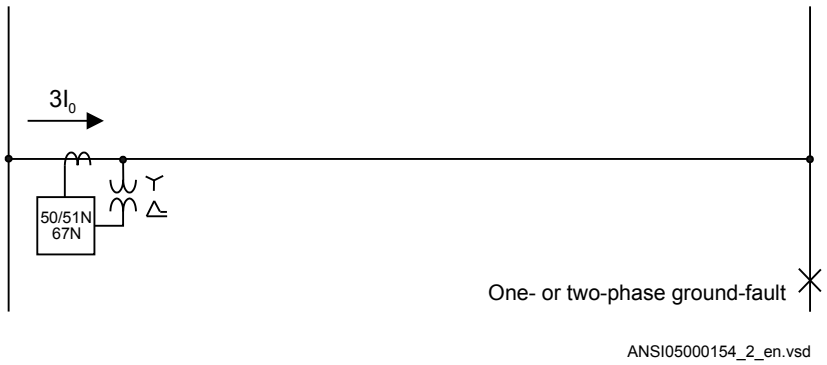

Figure 280: Step 2, check of reach calculation

The residual current, out on the line, is calculated at an operational case with minimal ground-fault current. The requirement that the whole line shall be covered by step 2 can be formulated according to equation 483.

$$I_{step2} \geq 0.7 \cdot 3I_0 \text{ (at remote busbar)}$$

(Equation 483)

To assure selectivity the current setting must be chosen so that step 2 does not operate at step 2 for faults on the next line from the remote substation. Consider a fault as shown in Figure 281.

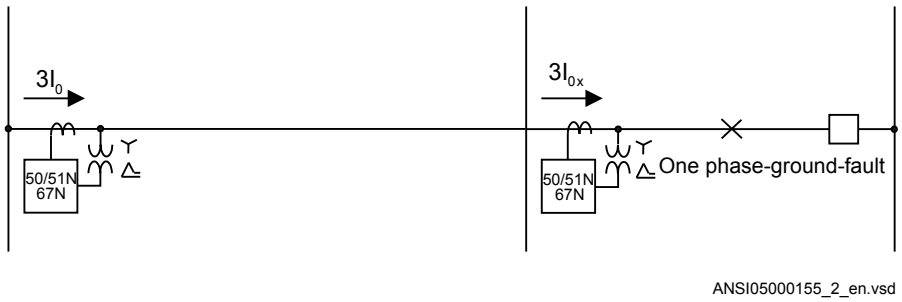

Figure 281: Step 2, selectivity calculation

A second criterion for step 2 is according to equation 484.

$$I_{step2} \geq 1.2 \cdot \frac{3I_0}{3I_{01}} \cdot I_{step1}$$

(Equation 484)

where:

I_{step1} is the current setting for step 1 on the faulted line.

Step 3

This step has directional function and a time delay slightly larger than step 2, often 0.8 s. Step 3 shall enable selective trip of ground faults having higher fault resistance to ground, compared to step 2. The requirement on step 3 is selectivity to other ground-fault protections in the network. One criterion for setting is shown in Figure 282.

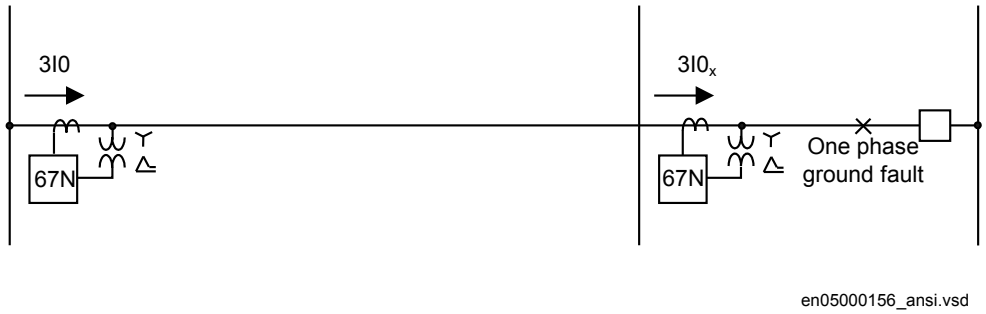

Figure 282: Step 3, Selectivity calculation

$$I_{step3} \geq 1.2 \cdot \frac{3I_0}{3I_{02}} \cdot I_{step2}$$

(Equation 485)

where:

I_{step2} is the chosen current setting for step 2 on the faulted line.

Step 4

This step normally has non-directional function and a relatively long time delay. The task for step 4 is to detect and initiate trip for ground faults with large fault resistance, for example tree faults. Step 4 shall also detect series faults where one or two poles, of a breaker or other switching device, are open while the other poles are closed.

Both high resistance ground faults and series faults give zero-sequence current flow in the network. Such currents give disturbances on telecommunication systems and current to ground. It is important to clear such faults both concerning personal security as well as risk of fire.

The current setting for step 4 is often set down to about 100 A (primary $3I_0$). In many applications definite time delay in the range 1.2 - 2.0 s is used. In other applications a current dependent inverse time characteristic is used. This enables a higher degree of selectivity also for sensitive ground-fault current protection.

8.5 Four step directional negative phase sequence overcurrent protection NS4PTOC (46I2)

8.5.1 Identification

Function description	IEC 61850 identification	IEC 60617 identification	ANSI/IEEE C37.2 device number
Four step negative sequence overcurrent protection	NS4PTOC	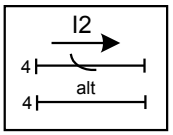	46I2

8.5.2 Application

Four step negative sequence overcurrent protection NS4PTOC (4612) is used in several applications in the power system. Some applications are:

- Ground-fault and phase-phase short circuit protection of feeders in effectively grounded distribution and subtransmission systems. Normally these feeders have radial structure.
- Back-up ground-fault and phase-phase short circuit protection of transmission lines.
- Sensitive ground-fault protection of transmission lines. NS4PTOC (4612) can have better sensitivity to detect resistive phase-to-ground-faults compared to distance protection.
- Back-up ground-fault and phase-phase short circuit protection of power transformers.
- Ground-fault and phase-phase short circuit protection of different kinds of equipment connected to the power system such as shunt capacitor banks, shunt reactors and others.

In many applications several steps with different current pickup levels and time delays are needed. NS4PTOC (4612) can have up to four, individual settable steps. The flexibility of each step of NS4PTOC (4612) function is great. The following options are possible:

Non-directional/Directional function: In some applications the non-directional functionality is used. This is mostly the case when no fault current can be fed from the protected object itself. In order to achieve both selectivity and fast fault clearance, the directional function can be necessary. This can be the case for unsymmetrical fault protection in meshed and effectively grounded transmission systems. The directional

negative sequence overcurrent protection is also well suited to operate in teleprotection communication schemes, which enables fast clearance of unsymmetrical faults on transmission lines. The directional function uses the voltage polarizing quantity.

Choice of time characteristics: There are several types of time characteristics available such as definite time delay and different types of inverse time characteristics. The selectivity between different overcurrent protections is normally enabled by co-ordination between the operating time of the different protections. To enable optimal co-ordination all overcurrent relays, to be co-ordinated against each other, should have the same time characteristic. Therefore a wide range of standardized inverse time characteristics are available: IEC and ANSI.

Table 34: Inverse time characteristics

Curve name
ANSI Extremely Inverse
ANSI Very Inverse
ANSI Normal Inverse
ANSI Moderately Inverse
ANSI/IEEE Definite time
ANSI Long Time Extremely Inverse
ANSI Long Time Very Inverse
ANSI Long Time Inverse
IEC Normal Inverse
IEC Very Inverse
IEC Inverse
IEC Extremely Inverse
IEC Short Time Inverse
IEC Long Time Inverse
IEC Definite Time
User Programmable
ASEA RI
RXIDG (logarithmic)

There is also a user programmable inverse time characteristic.

Normally it is required that the negative sequence overcurrent function shall reset as fast as possible when the current level gets lower than the operation level. In some cases some sort of delayed reset is required. Therefore different kinds of reset characteristics can be used.

For some protection applications there can be a need to change the current pickup level for some time. Therefore there is a possibility to give a setting of a multiplication factor *MultPUx* to the negative sequence current pick-up level. This multiplication factor is activated from a binary input signal MULTPUx to the function.

8.5.3 Setting guidelines

The parameters for Four step negative sequence overcurrent protection NS4PTOC (46I2) are set via the local HMI or Protection and Control Manager (PCM600).

The following settings can be done for the four step negative sequence overcurrent protection:

Operation: Sets the protection to *Enabled* or *Disabled*.

Common base IED values for primary current (*IBase*), primary voltage (*VBase*) and primary power (*SBase*) are set in Global base values for settings function GBASVAL. *GlobalBaseSel*: It is used to select a GBASVAL function for reference of base values.

When inverse time overcurrent characteristic is selected, the operate time of the stage will be the sum of the inverse time delay and the set definite time delay. Thus, if only the inverse time delay is required, it is of utmost importance to set the definite time delay for that stage to zero.

8.5.3.1 Settings for each step

x means step 1, 2, 3 and 4.

DirModeSelx: The directional mode of step x. Possible settings are off/nondirectional/forward/reverse.

Characteristx: Selection of time characteristic for step *x*. Definite time delay and different types of inverse time characteristics are available.

Table 35: Inverse time characteristics

Curve name
ANSI Extremely Inverse
ANSI Very Inverse
ANSI Normal Inverse
ANSI Moderately Inverse
Table continues on next page

Curve name
ANSI/IEEE Definite time
ANSI Long Time Extremely Inverse
ANSI Long Time Very Inverse
ANSI Long Time Inverse
IEC Normal Inverse
IEC Very Inverse
IEC Inverse
IEC Extremely Inverse
IEC Short Time Inverse
IEC Long Time Inverse
IEC Definite Time
User Programmable
ASEA RI
RXIDG (logarithmic)

The different characteristics are described in the Technical Reference Manual (TRM).

Pickupx: Operation negative sequence current level for step x given in % of *IBase*.

tx: Definite time delay for step x. Used if definite time characteristic is chosen.

TDx: Time multiplier for the dependent (inverse) characteristic.

IMinx: Minimum operate current for step x in % of *IBase*. Set *IMinx* below *Pickupx* for every step to achieve ANSI reset characteristic according to standard. If *IMinx* is set above *Pickupx* for any step the ANSI reset works as if current is zero when current drops below *IMinx*.

MultPUx: Multiplier for scaling of the current setting value. If a binary input signal (ENMULTx) is activated the current operation level is multiplied by this setting constant.

txMin: Minimum operation time for inverse time characteristics. At high currents the inverse time characteristic might give a very short operation time. By setting this parameter the operation time of the step can never be shorter than the setting.

ResetTypeCrvx: The reset of the delay timer can be made in different ways. By choosing setting there are the following possibilities:

Curve name
Instantaneous
IEC Reset (constant time)
ANSI Reset (inverse time)

The different reset characteristics are described in the Technical Reference Manual (TRM). There are some restrictions regarding the choice of reset delay.

For the independent time delay characteristics the possible delay time settings are instantaneous (1) and IEC (2 = set constant time reset).

For ANSI inverse time delay characteristics all three types of reset time characteristics are available; instantaneous (1), IEC (2 = set constant time reset) and ANSI (3 = current dependent reset time).

For IEC inverse time delay characteristics the possible delay time settings are instantaneous (1) and IEC (2 = set constant time reset).

For the programmable inverse time delay characteristics all three types of reset time characteristics are available; instantaneous (1), IEC (2 = set constant time reset) and ANSI (3 = current dependent reset time). If the current dependent type is used settings *pr*, *tr* and *cr* must be given.

tPCrvx, *tACrvx*, *tBCrvx*, *tCCrvx*: Parameters for programmable inverse time characteristic curve (Curve type = 17). The time characteristic equation is according to equation 479:

$$t[s] = \left(\frac{A}{\left(\frac{i}{ipickup}\right)^{p} - C} + B \right) \cdot TD$$

(Equation 486)

Further description can be found in the Technical reference manual (TRM).

tPRCrvx, tTRCrvx, tCRCrvx: Parameters for programmable inverse reset time characteristic curve. Further description can be found in the Technical reference manual (TRM).

8.5.3.2 Common settings for all steps

x means step 1, 2, 3 and 4.

AngleRCA: Relay characteristic angle given in degrees. This angle is defined as shown in figure 274. The angle is defined positive when the residual current lags the reference voltage (Vpol = -)

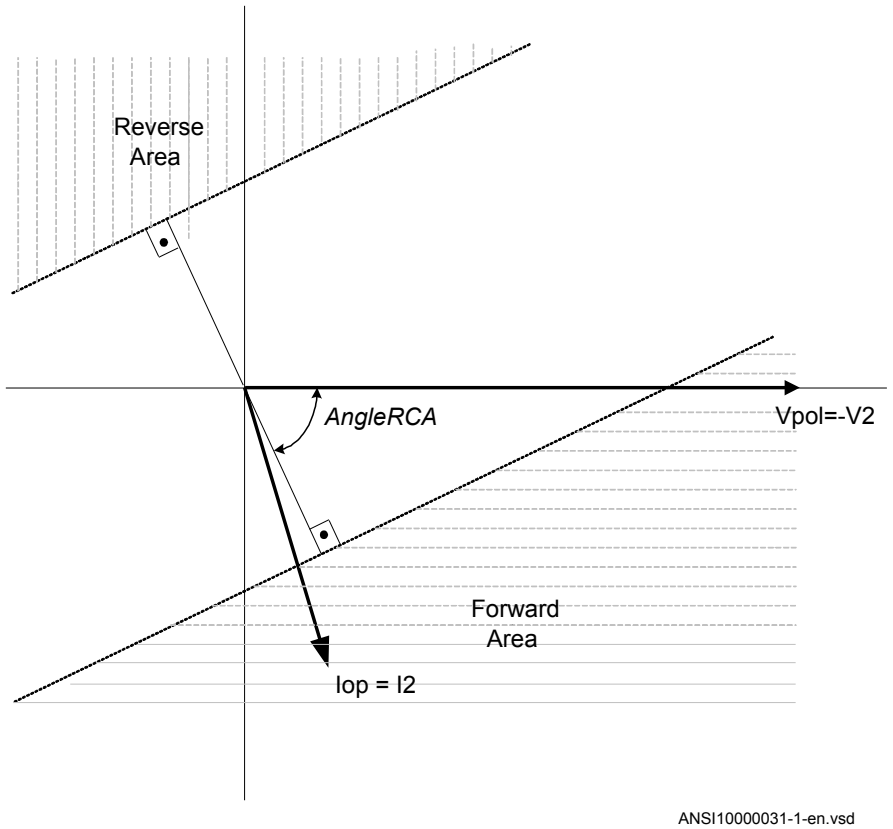

Figure 283: Relay characteristic angle given in degree

In a transmission network a normal value of RCA is about 80°.

VPolMin: Minimum polarization (reference) voltage % of *VBase*.

I>Dir: Operate residual current level for directional comparison scheme. The setting is given in % of *IBase*. The pickup forward or pickup reverse signals can be used in a communication scheme. The appropriate signal must be configured to the communication scheme block.

8.6 Sensitive directional residual overcurrent and power protection SDEPSDE (67N)

8.6.1 Identification

Function description	IEC 61850 identification	IEC 60617 identification	ANSI/IEEE C37.2 device number
Sensitive directional residual over current and power protection	SDEPSDE	-	67N

8.6.2 Application

In networks with high impedance grounding, the phase-to-ground fault current is significantly smaller than the short circuit currents. Another difficulty for ground fault protection is that the magnitude of the phase-to-ground fault current is almost independent of the fault location in the network.

Directional residual current can be used to detect and give selective trip of phase-to-ground faults in high impedance grounded networks. The protection uses the residual current component $3I_0 \cdot \cos \varphi$, where φ is the angle between the residual current and the residual voltage ($-3V_0$), compensated with a characteristic angle. Alternatively, the function can be set to strict $3I_0$ level with a check of angle φ.

Directional residual power can also be used to detect and give selective trip of phase-to-ground faults in high impedance grounded networks. The protection uses the residual power component $3I_0 \cdot 3V_0 \cdot \cos \varphi$, where φ is the angle between the residual current and the reference residual voltage, compensated with a characteristic angle.

A normal non-directional residual current function can also be used with definite or inverse time delay.

A backup neutral point voltage function is also available for non-directional residual overvoltage protection.

In an isolated network, that is, the network is only coupled to ground via the capacitances between the phase conductors and ground, the residual current always has -90º phase shift compared to the residual voltage ($3V_0$). The characteristic angle is chosen to -90º in such a network.

In resistance grounded networks or in Petersen coil grounded, with a parallel resistor, the active residual current component (in phase with the residual voltage) should be used for the ground fault detection. In such networks, the characteristic angle is chosen to 0º.

As the magnitude of the residual current is independent of the fault location, the selectivity of the ground fault protection is achieved by time selectivity.

When should the sensitive directional residual overcurrent protection be used and when should the sensitive directional residual power protection be used? Consider the following:

- Sensitive directional residual overcurrent protection gives possibility for better sensitivity. The setting possibilities of this function are down to 0.25 % of IBase, 1 A or 5 A. This sensitivity is in most cases sufficient in high impedance network applications, if the measuring CT ratio is not too high.
- Sensitive directional residual power protection gives possibility to use inverse time characteristics. This is applicable in large high impedance grounded networks, with large capacitive ground fault currents. In such networks, the active fault current would be small and by using sensitive directional residual power protection, the operating quantity is elevated. Therefore, better possibility to detect ground faults. In addition, in low impedance grounded networks, the inverse time characteristic gives better time-selectivity in case of high zero-resistive fault currents.

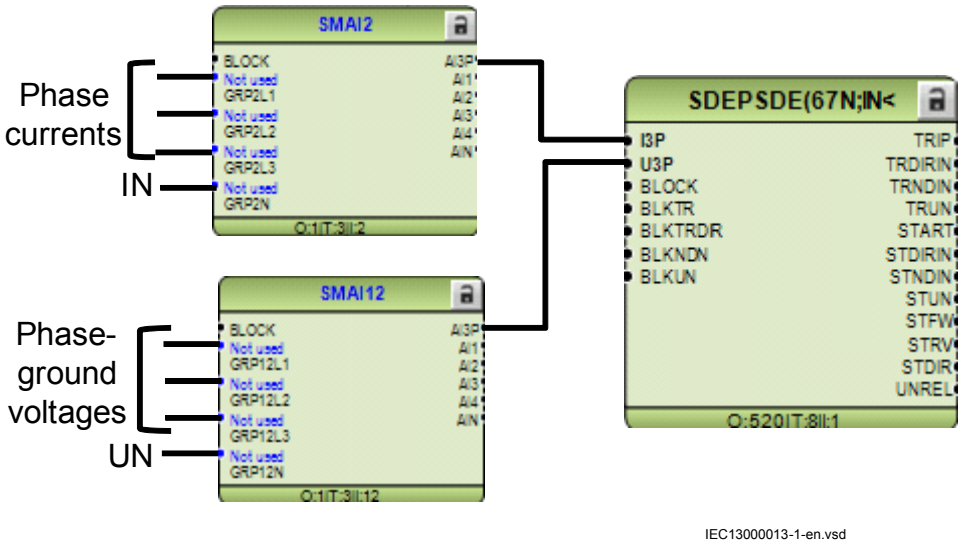

Figure 284: Connection of SDEPSDE to analog preprocessing function block

Overcurrent functionality uses true 3I0, i.e. sum of GRPxL1, GRPxL2 and GRPxL3. For 3I0 to be calculated, connection is needed to all three phase inputs.

Directional and power functionality uses IN and UN. If a connection is made to GRPxN this signal is used, else if connection is made to all inputs GRPxL1, GRPxL2 and GRPxL3 the internally calculated sum of these inputs (3I0 and 3U0) will be used.

8.6.3 Setting guidelines

The sensitive ground-fault protection is intended to be used in high impedance grounded systems, or in systems with resistive grounding where the neutral point resistor gives an ground-fault current larger than what normal high impedance gives but smaller than the phase to phase short circuit current.

In a high impedance system the fault current is assumed to be limited by the system zero sequence shunt impedance to ground and the fault resistance only. All the series impedances in the system are assumed to be zero.

In the setting of ground-fault protection, in a high impedance grounded system, the neutral point voltage (zero sequence voltage) and the ground-fault current will be calculated at the desired sensitivity (fault resistance). The complex neutral point voltage (zero sequence) can be calculated as:

$$V_0 = \frac{V_{phase}}{1 + \frac{3 \cdot R_f}{Z_0}}$$

(Equation 487)

Where

V_{phase} is the phase voltage in the fault point before the fault,

R_f is the resistance to ground in the fault point and

Z_0 is the system zero sequence impedance to ground

The fault current, in the fault point, can be calculated as:

$$I_j = 3I_0 = \frac{3 \cdot V_{phase}}{Z_0 + 3 \cdot R_f}$$

(Equation 488)

The impedance Z_0 is dependent on the system grounding. In an isolated system (without neutral point apparatus) the impedance is equal to the capacitive coupling between the phase conductors and ground:

$$Z_0 = -jX_c = -j\frac{3 \cdot V_{phase}}{I_j}$$

(Equation 489)

Where

I_j is the capacitive ground fault current at a non-resistive phase-to-ground fault

X_c is the capacitive reactance to ground

In a system with a neutral point resistor (resistance grounded system) the impedance Z_0 can be calculated as:

$$Z_0 = \frac{-jX_c \cdot 3R_n}{-jX_c + 3R_n}$$

(Equation 490)

Where

R_n is the resistance of the neutral point resistor

In many systems there is also a neutral point reactor (Petersen coil) connected to one or more transformer neutral points. In such a system the impedance Z_0 can be calculated as:

$$Z_0 = -jX_c // 3R_n // j3X_n = \frac{9R_n X_n X_c}{3X_n X_c + j3R_n \cdot \left(3X_n - X_c\right)}$$

(Equation 491)

Where

X_n is the reactance of the Petersen coil. If the Petersen coil is well tuned we have $3X_n = X_c$ In this case the impedance Z_0 will be: $Z_0 = 3R_n$

Now consider a system with an grounding via a resistor giving higher ground fault current than the high impedance grounding. The series impedances in the system can no longer be neglected. The system with a single phase to ground fault can be described as in Figure 285.

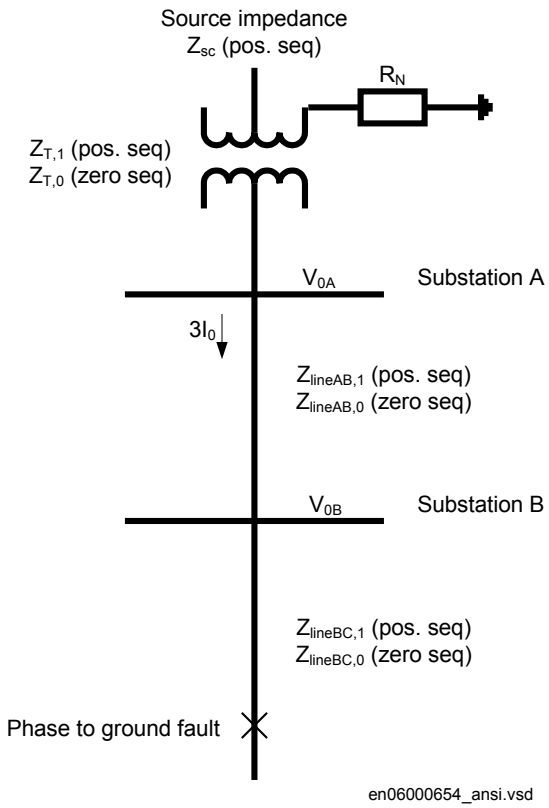

Figure 285: Equivalent of power system for calculation of setting

The residual fault current can be written:

$$3I_0 = \frac{3V_{phase}}{2 \cdot Z_1 + Z_0 + 3 \cdot R_f}$$

(Equation 492)

Where

V_{phase}	is the phase voltage in the fault point before the fault
Z_1	is the total positive sequence impedance to the fault point. $Z_1 = Z_{sc}+Z_{T,1}+Z_{lineAB,1}+Z_{lineBC,1}$
Z_0	is the total zero sequence impedance to the fault point. $Z_0 = Z_{T,0}+3R_N+Z_{lineAB,0}+Z_{lineBC,0}$
R_f	is the fault resistance.

The residual voltages in stations A and B can be written:

$$V_{0A} = 3I_0 \cdot (Z_{T,0} + 3R_N)$$

(Equation 493)

$$V_{OB} = 3I_0 \cdot (Z_{T,0} + 3R_N + Z_{lineAB,0})$$

(Equation 494)

The residual power, measured by the sensitive ground fault protections in A and B will be:

$$S_{0A} = 3V_{0A} \cdot 3I_0$$

(Equation 495)

$$S_{0B} = 3V_{0B} \cdot 3I_0$$

(Equation 496)

The residual power is a complex quantity. The protection will have a maximum sensitivity in the characteristic angle RCA. The apparent residual power component in the characteristic angle, measured by the protection, can be written:

$$S_{0A,prot} = 3V_{0A} \cdot 3I_0 \cdot \cos\varphi_A$$

(Equation 497)

$$S_{0B,prot} = 3V_{0B} \cdot 3I_0 \cdot \cos\varphi_B$$

(Equation 498)

The angles φ_A and φ_B are the phase angles between the residual current and the residual voltage in the station compensated with the characteristic angle RCA.

The protection will use the power components in the characteristic angle direction for measurement, and as base for the inverse time delay.

The inverse time delay is defined as:

$$t_{inv} = \frac{TDSN \cdot (3I_0 \cdot 3V_0 \cdot \cos\phi(\text{reference}))}{3I_0 \cdot 3V_0 \cos\phi(\text{measured})}$$

(Equation 499)

The function can be set *Enabled/Disabled* with the setting of *Operation*.

GlobalBaseSel: It is used to select a GBASVAL function for reference of base values.

RotResU: It is a setting for rotating the polarizing quantity ($3V_0$) by 0 or 180 degrees. This parameter is set to 180 degrees by default in order to inverse the residual voltage ($3V_0$) to calculate the reference voltage ($-3V_0\ e^{-jRCADir}$). Since the reference voltage is used as the polarizing quantity for directionality, it is important to set this parameter correctly.

With the setting *OpModeSel* the principle of directional function is chosen.

With *OpModeSel* set to *3I0cosfi* the current component in the direction equal to the characteristic angle*RCADir* has the maximum sensitivity. The characteristic for *RCADir* is equal to 0° is shown in Figure 286.

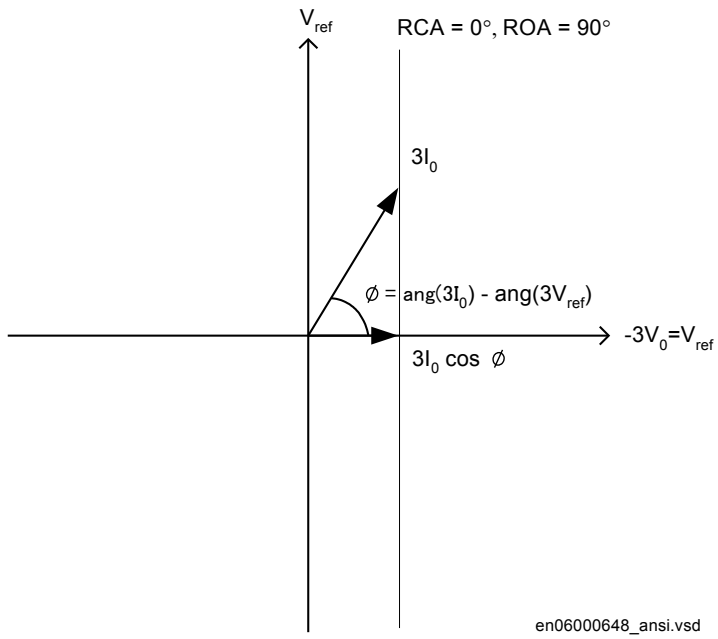

Figure 286: Characteristic for RCADir equal to 0°

The characteristic is for *RCADir* equal to -90° is shown in Figure 287.

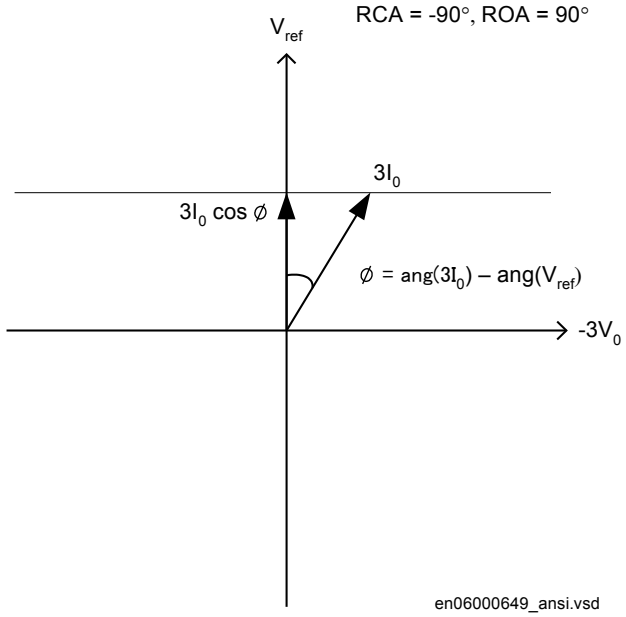

Figure 287: Characteristic for RCADir equal to -90°

When *OpModeSel* is set to *3I03V0Cosfi* the apparent residual power component in the direction is measured.

When *OpModeSel* is set to *3I0 and fi* the function will operate if the residual current is larger than the setting *INDirPU* and the residual current angle is within the sector *RCADir* ± *ROADir*.

The characteristic for this *OpModeSel* when *RCADir* = 0° and *ROADir* = 80° is shown in figure 288.

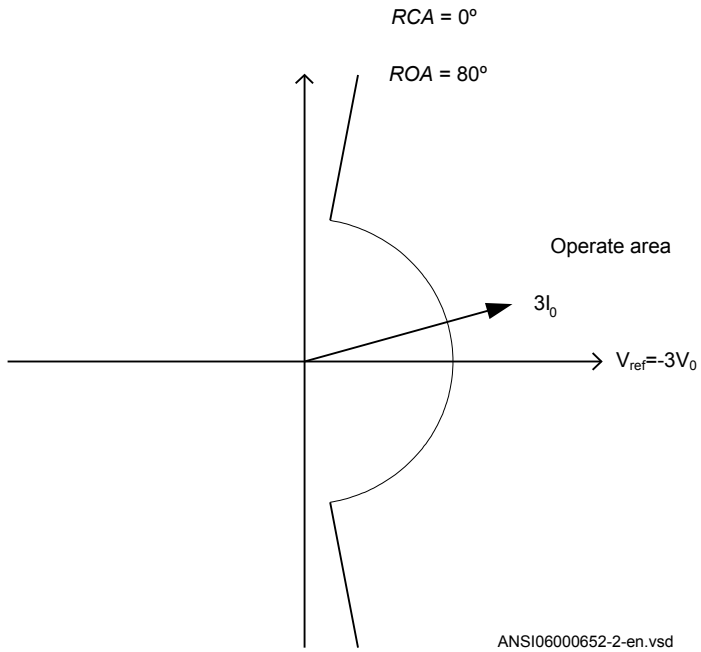

Figure 288: Characteristic for RCADir = 0° and ROADir = 80°

DirMode is set *Forward* or *Reverse* to set the direction of the operation for the directional function selected by the *OpModeSel*.

All the directional protection modes have a residual current release level setting *INRelPU* which is set in % of *IBase*. This setting should be chosen smaller than or equal to the lowest fault current to be detected.

All the directional protection modes have a residual voltage release level setting *VNRelPU* which is set in % of *VBase*. This setting should be chosen smaller than or equal to the lowest fault residual voltage to be detected.

tDef is the definite time delay, given in s, for the directional residual current protection.

tReset is the time delay before the definite timer gets reset, given in s. With a *tReset* time of few cycles, there is an increased possibility to clear intermittent ground faults correctly. The setting shall be much shorter than the set trip delay. In case of intermittent ground faults, the fault current is intermittently dropping below the set value during consecutive cycles. Therefore the definite timer should continue for a certain time equal to *tReset* even though the fault current has dropped below the set value.

The characteristic angle of the directional functions *RCADir* is set in degrees. *RCADir* is normally set equal to 0° in a high impedance grounded network with a neutral point resistor as the active current component is appearing out on the faulted feeder only. *RCADir* is set equal to -90° in an isolated network as all currents are mainly capacitive.

ROADir is Relay Operating Angle. *ROADir* is identifying a window around the reference direction in order to detect directionality. *ROADir* is set in degrees. For angles differing more than *ROADir* from *RCADir* the function is blocked. The setting can be used to prevent unwanted operation for non-faulted feeders, with large capacitive ground fault current contributions, due to CT phase angle error.

INCosPhiPU is the operate current level for the directional function when *OpModeSel* is set *3I0Cosfi*. The setting is given in % of *IBase*. The setting should be based on calculation of the active or capacitive ground fault current at required sensitivity of the protection.

SN_PU is the operate power level for the directional function when *OpModeSel* is set *3I03V0Cosfi*. The setting is given in % of *SBase*. The setting should be based on calculation of the active or capacitive ground fault residual power at required sensitivity of the protection.

The input transformer for the Sensitive directional residual over current and power protection function has the same short circuit capacity as the phase current transformers. Hence, there is no specific requirement for the external CT core, i.e. any CT core can be used.

If the time delay for residual power is chosen the delay time is dependent on two setting parameters. *SRef* is the reference residual power, given in % of *SBase*. *TDSN* is the time multiplier. The time delay will follow the following expression:

$$t_{inv} = \frac{TDSN \cdot Sref}{3I_0 \cdot 3V_0 \cdot \cos\varphi(measured)}$$

(Equation 500)

INDirPU is the operate current level for the directional function when *OpModeSel* is set *3I0 and fi*. The setting is given in % of *IBase*. The setting should be based on calculation of the ground fault current at required sensitivity of the protection.

OpINNonDir is set *Enabled* to activate the non-directional residual current protection.

INNonDirPU is the operate current level for the non-directional function. The setting is given in % of *IBase*. This function can be used for detection and clearance of cross-country faults in a shorter time than for the directional function. The current setting should be larger than the maximum single-phase residual current on the protected line.

TimeChar is the selection of time delay characteristic for the non-directional residual current protection. Definite time delay and different types of inverse time characteristics are available:

Table 36: Inverse time characteristics

Curve name
ANSI Extremely Inverse
ANSI Very Inverse
ANSI Normal Inverse
ANSI Moderately Inverse
ANSI/IEEE Definite time
ANSI Long Time Extremely Inverse
ANSI Long Time Very Inverse
ANSI Long Time Inverse
IEC Normal Inverse
IEC Very Inverse
IEC Inverse
IEC Extremely Inverse
IEC Short Time Inverse
IEC Long Time Inverse
IEC Definite Time
User Programmable
ASEA RI
RXIDG (logarithmic)

See chapter “Inverse time characteristics” in Technical Manual for the description of different characteristics

tPCrv, tACrv, tBCrv, tCCrv: Parameters for customer creation of inverse time characteristic curve (Curve type = 17). The time characteristic equation is:

$$t[s] = \left(\frac{A}{\left(\frac{i}{Pickup\_N} \right)^{p} - C} + B \right) \cdot InMult$$

(Equation 501)

tINNonDir is the definite time delay for the non directional ground fault current protection, given in s.

OpVN is set *Enabled* to activate the trip function of the residual over voltage protection.

tVN is the definite time delay for the trip function of the residual voltage protection, given in s.

8.7 Thermal overload protection, one time constant Fahrenheit/Celsius LFPTTR/LCPTTR (26)

8.7.1 Identification

Function description	IEC 61850 identification	IEC 60617 identification	ANSI/IEEE C37.2 device number
Thermal overload protection, one time constant, Fahrenheit	LFPTTR		26
Thermal overload protection, one time constant, Celsius	LCPTTR		26

8.7.2 Application

Lines and cables in the power system are designed for a certain maximum load current level. If the current exceeds this level the losses will be higher than expected. As a consequence the temperature of the conductors will increase. If the temperature of the lines and cables reaches too high values the equipment might be damaged:

- The sag of overhead lines can reach unacceptable value.
- If the temperature of conductors, for example aluminium conductors, gets too high the material will be destroyed.
- In cables the insulation can be damaged as a consequence of the overtemperature. As a consequence of this phase to phase or phase to ground faults can occur.

In stressed situations in the power system it can be required to overload lines and cables for a limited time. This should be done while managing the risks safely.

The thermal overload protection provides information that makes a temporary overloading of cables and lines possible. The thermal overload protection estimates the conductor temperature continuously, in Celsius or Fahrenheit depending on whether LFPTTR or LCPTTR (26) is chosen. This estimation is made by using a thermal model of the line/cable based on the current measurement.

If the temperature of the protected object reaches a set warning level *AlarmTemp*, a signal ALARM can be given to the operator. This enables actions in the power system to be taken before dangerous temperatures are reached. If the temperature continues to increase to the trip value *TripTemp*, the protection initiates trip of the protected line.

8.7.3 Setting guideline

The parameters for the Thermal overload protection, one time constant, Fahrenheit/Celsius LFPTTR/LCPTTR (26) are set via the local HMI or PCM600.

The following settings can be done for the thermal overload protection.

Operation: *Disabled*/*Enabled*

GlobalBaseSel is used to select a GBASVAL function for reference of base values, primary current (*IBase*), primary voltage (*UBase*) and primary power (*SBase*).

Imult: Enter the number of lines in case the protection function is applied on multiple parallel lines sharing one CT.

IRef: Reference, steady state current, given in % of *IBase* that will give a steady state (end) temperature rise *TRef*. It is suggested to set this current to the maximum steady state current allowed for the line/cable under emergency operation (a few hours per year).

TRef: Reference temperature rise (end temperature) corresponding to the steady state current *IRef*. From cable manuals current values with corresponding conductor temperature are often given. These values are given for conditions such as ground temperature, ambient air temperature, way of laying of cable and ground thermal resistivity. From manuals for overhead conductor temperatures and corresponding current is given.

Tau: The thermal time constant of the protected circuit given in minutes. Please refer to manufacturers manuals for details.

TripTemp: Temperature value for trip of the protected circuit. For cables, a maximum allowed conductor temperature is often stated to be 190°F (88°C). For overhead lines, the critical temperature for aluminium conductor is about 190-210°F (88-99°C). For a copper conductor a normal figure is 160°F (71°C).

AlarmTemp: Temperature level for alarm of the protected circuit. ALARM signal can be used as a warning before the circuit is tripped. Therefore the setting shall be lower than the trip level. It shall at the same time be higher than the maximum conductor temperature at normal operation. For cables this level is often given to 150°F (66°C). Similar values are stated for overhead lines. A suitable setting can be about 60°F (16°C) below the trip value.

ReclTemp: Temperature where lockout signal LOCKOUT from the protection is released. When the thermal overload protection trips a lock-out signal is activated. This signal is intended to block switch in of the protected circuit as long as the conductor temperature is high. The signal is released when the estimated temperature is below the set value. This temperature value should be chosen below the alarm temperature.

8.8 Breaker failure protection 3-phase activation and output CCRBRF (50BF)

8.8.1 Identification

Function description	IEC 61850 identification	IEC 60617 identification	ANSI/IEEE C37.2 device number
Breaker failure protection, 3-phase activation and output	CCRBRF	*3I>BF*	50BF

8.8.2 Application

In the design of the fault clearance system the N-1 criterion is often used. This means that a fault needs to be cleared even if any component in the fault clearance system is faulty. One necessary component in the fault clearance system is the circuit breaker. It is from practical and economical reason not feasible to duplicate the circuit breaker for the protected component. Instead a breaker failure protection is used.

Breaker failure protection, 3-phase activation and output (CCRBRF, 50BF) will issue a back-up trip command to adjacent circuit breakers in case of failure to trip of the “normal” circuit breaker for the protected component. The detection of failure to break the current through the breaker is made by means of current measurement or as detection of remaining trip signal (unconditional).

CCRBRF (50BF) can also give a re-trip. This means that a second trip signal is sent to the protected circuit breaker. The re-trip function can be used to increase the probability of operation of the breaker, or it can be used to avoid back-up trip of many breakers in case of mistakes during relay maintenance and test.

8.8.3 Setting guidelines

The parameters for Breaker failure protection 3-phase activation and output CCRBRF (50BF) are set via the local HMI or PCM600.

The following settings can be done for the breaker failure protection.

GlobalBaseSel: Selects the global base value group used by the function to define (*IBase*), (*VBase*) and (*SBase*).

Operation: *Disabled*/*Enabled*

FunctionMode This parameter can be set *Current* or *Contact*. This states the way the detection of failure of the breaker is performed. In the mode current the current measurement is used for the detection. In the mode *Contact* the long duration of breaker position signal is used as indicator of failure of the breaker. The mode *Current&Contact* means that both ways of detections are activated. *Contact* mode can be usable in applications where the fault current through the circuit breaker is small. This can be the case for some generator protection application (for example reverse power protection) or in case of line ends with weak end infeed.

RetripMode: This setting states how the re-trip function shall operate. *Retrip Off* means that the re-trip function is not activated. *CB Pos Check* (circuit breaker position check) and *Current* means that a phase current must be larger than the operate level to allow re-trip. *CB Pos Check* (circuit breaker position check) and *Contact* means re-trip is done when circuit breaker is closed (breaker position is used). *No CBPos Check* means re-trip is done without check of breaker position.

Table 37: Dependencies between parameters RetripMode and FunctionMode

RetripMode	*FunctionMode*	Description
Retrip Off	N/A	the re-trip function is not activated
CB Pos Check	*Current*	a phase current must be larger than the operate level to allow re-trip
	Contact	re-trip is done when breaker position indicates that breaker is still closed after re-trip time has elapsed
	Current&Contact	both methods are used
No CBPos Check	*Current*	re-trip is done without check of breaker position
	Contact	re-trip is done without check of breaker position
	Current&Contact	both methods are used

BuTripMode: Back-up trip mode is given to state sufficient current criteria to detect failure to break. For *Current* operation *2 out of 4* means that at least two currents, of the three-phase currents and the residual current, shall be high to indicate breaker failure. *1 out of 3* means that at least one current of the three-phase currents shall be high to indicate breaker failure. *1 out of 4* means that at least one current of the three-phase currents or the residual current shall be high to indicate breaker failure. In most applications *1 out of 3* is sufficient. For *Contact* operation means back-up trip is done when circuit breaker is closed (breaker position is used).

Pickup_PH: Current level for detection of breaker failure, set in % of *IBase*. This parameter should be set so that faults with small fault current can be detected. The setting can be chosen in accordance with the most sensitive protection function to start the breaker failure protection. Typical setting is 10% of *IBase*.

Pickup_BlkCont: If any contact based detection of breaker failure is used this function can be blocked if any phase current is larger than this setting level. If the *FunctionMode* is set *Current&Contact* breaker failure for high current faults are safely detected by the current measurement function. To increase security the contact based function should be disabled for high currents. The setting can be given within the range 5 – 200% of *IBase*.

Pickup_N: Residual current level for detection of breaker failure set in % of *IBase*. In high impedance grounded systems the residual current at phase- to-ground faults are normally much smaller than the short circuit currents. In order to detect breaker failure at single-phase-ground faults in these systems it is necessary to measure the residual current separately. Also in effectively grounded systems the setting of the ground-fault current protection can be chosen to relatively low current level. The *BuTripMode* is set *1 out of 4*. The current setting should be chosen in accordance to the setting of the sensitive ground-fault protection. The setting can be given within the range 2 – 200 % of *IBase*.

t1: Time delay of the re-trip. The setting can be given within the range 0 – 60s in steps of 0.001 s. Typical setting is 0 – 50ms.

t2: Time delay of the back-up trip. The choice of this setting is made as short as possible at the same time as unwanted operation must be avoided. Typical setting is 90 – 200ms (also dependent of re-trip timer).

The minimum time delay for the re-trip can be estimated as:

$$t2 \geq t1 + t_{cbopen} + t_{BFP\_reset} + t_{margin}$$

(Equation 502)

where:

t_{cbopen}	is the maximum opening time for the circuit breaker
t_{BFP_reset}	is the maximum time for breaker failure protection to detect correct breaker function (the current criteria reset)
t_{margin}	is a safety margin

It is often required that the total fault clearance time shall be less than a given critical time. This time is often dependent of the ability to maintain transient stability in case of a fault close to a power plant.

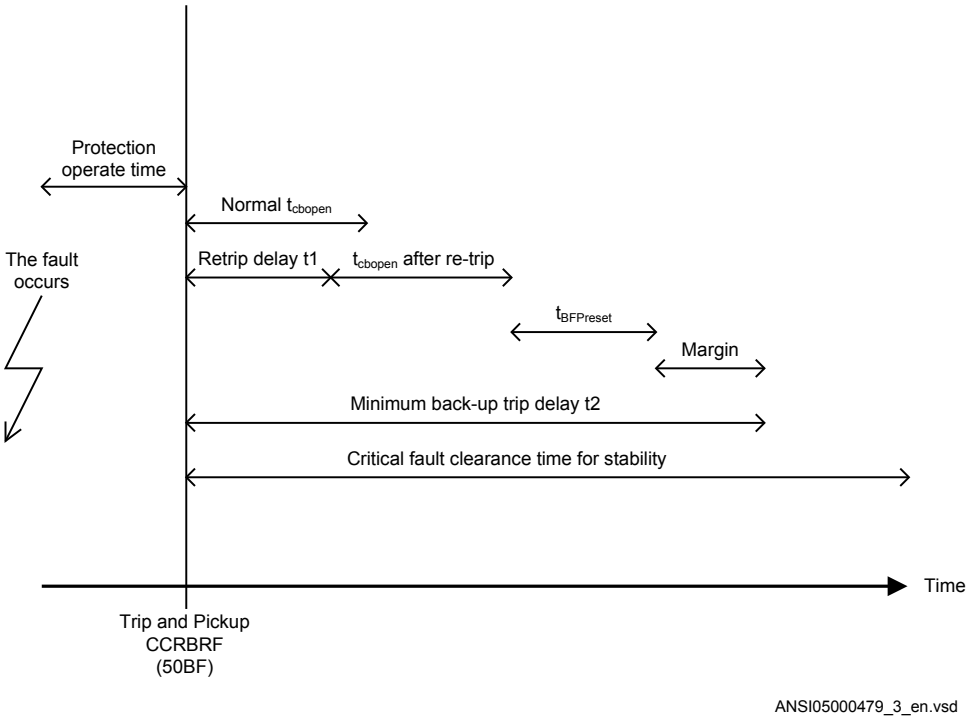

Figure 289: Time sequence

t2MPh: Time delay of the back-up trip at multi-phase initiate. The critical fault clearance time is often shorter in case of multi-phase faults, compared to single phase-to-ground faults. Therefore there is a possibility to reduce the back-up trip delay for multi-phase faults. Typical setting is 90 – 150 ms.

t3: Additional time delay to *t2* for a second back-up trip TRBU2. In some applications there might be a requirement to have separated back-up trip functions, tripping different back-up circuit breakers.

tCBAlarm: Time delay for alarm in case of indication of faulty circuit breaker. There is a binary input 52FAIL from the circuit breaker. This signal is activated when internal supervision in the circuit breaker detect that the circuit breaker is unable to clear fault. This could be the case when gas pressure is low in a SF6 circuit breaker, of others. After the set time an alarm is given, so that actions can be done to repair the circuit breaker. The time delay for back-up trip is bypassed when the 52FAIL is active. Typical setting is 2.0 seconds.

tPulse: Trip pulse duration. This setting must be larger than the critical impulse time of circuit breakers to be tripped from the breaker failure protection. Typical setting is 200 ms.

8.9 Stub protection STBPTOC (50STB)

8.9.1 Identification

Function description	IEC 61850 identification	IEC 60617 identification	ANSI/IEEE C37.2 device number
Stub protection	STBPTOC	3I>STUB	50STB

8.9.2 Application

In a breaker-and-a-half switchyard the line protection and the busbar protection normally have overlap when a connected object is in service. When an object is taken out of service it is normally required to keep the diagonal of the breaker-and-a-half switchyard in operation. This is done by opening the disconnector to the protected object. This will, however, disable the normal object protection (for example the distance protection) of the energized part between the circuit breakers and the open disconnector.

Stub protection STBPTOC (50STB) is a simple phase overcurrent protection, fed from the two current transformer groups feeding the object taken out of service. The stub protection is only activated when the disconnector of the object is open. STBPTOC (50STB) enables fast fault clearance of faults at the section between the CTs and the open disconnector.

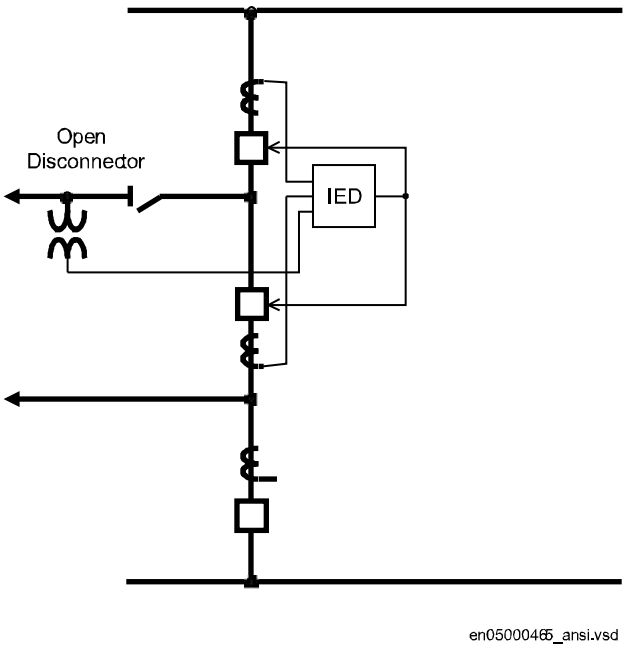

Figure 290: Typical connection for STBPTOC (50STB) in breaker-and-a-half arrangement.

8.9.3 Setting guidelines

The parameters for Stub protection STBPTOC (50STB) are set via the local HMI or PCM600.

The following settings can be done for the stub protection.

GlobalBaseSel: Selects the global base value group used by the function to define (*IBase*), (*VBase*) and (*SBase*).

Operation: *Disabled*/*Enabled*

EnableMode: This parameter can be set *Enable* or *Continuous*. With the*Enable* setting the function is only active when a binary release signal ENABLE into the function is activated. This signal is normally taken from an auxiliary contact (normally closed) of the line disconnector and connected to a binary input ENABLE of the IED. With the setting*Continuous* the function is activated independent of presence of any external release signal.

IPickup: Current level for the Stub protection, set in % of *IBase*. This parameter should be set so that all faults on the stub can be detected. The setting should thus be based on fault calculations.

t: Time delay of the operation. Normally the function shall be instantaneous.

8.10 Pole discrepancy protection CCPDSC(52PD)

8.10.1 Identification

Function description	IEC 61850 identification	IEC 60617 identification	ANSI/IEEE C37.2 device number
Pole discrepancy protection	CCPDSC	PD	52PD

8.10.2 Application

There is a risk that a circuit breaker will get discrepancy between the poles at circuit breaker operation: closing or opening. One pole can be open and the other two closed, or two poles can be open and one closed. Pole discrepancy of a circuit breaker will cause unsymmetrical currents in the power system. The consequence of this can be:

- Negative sequence currents that will give stress on rotating machines
- Zero sequence currents that might give unwanted operation of sensitive ground-fault protections in the power system.

It is therefore important to detect situations with pole discrepancy of circuit breakers. When this is detected the breaker should be tripped directly.

Pole discordance protection CCPDSC (52PD) will detect situation with deviating positions of the poles of the protected circuit breaker. The protection has two different options to make this detection:

- By connecting the auxiliary contacts in the circuit breaker so that logic is created, a signal can be sent to the protection, indicating pole discrepancy. This logic can also be realized within the protection itself, by using opened and close signals for each circuit breaker pole, connected to the protection.
- Each phase current through the circuit breaker is measured. If the difference between the phase currents is larger than a *CurrUnsymPU* this is an indication of pole discrepancy, and the protection will operate.

8.10.3 Setting guidelines

The parameters for the Pole discordance protection CCPDSC (52PD) are set via the local HMI or PCM600.

The following settings can be done for the pole discrepancy protection.

GlobalBaseSel: Selects the global base value group used by the function to define (*IBase*), (*VBase*) and (*SBase*).

Operation: *Disabled* or *Enabled*

tTrip: Time delay of the operation.

ContactSel: Operation of the contact based pole discrepancy protection. Can be set: *Disabled*/*PD signal from CB*. If *PD signal from CB* is chosen the logic to detect pole discrepancy is made in the vicinity to the breaker auxiliary contacts and only one signal is connected to the pole discrepancy function. If the *Pole pos aux cont.* alternative is chosen each open close signal is connected to the IED and the logic to detect pole discrepancy is realized within the function itself.

CurrentSel: Operation of the current based pole discrepancy protection. Can be set: *Disabled*/*CB oper monitor*/*Continuous monitor*. In the alternative *CB oper monitor* the function is activated only directly in connection to breaker open or close command (during 200 ms). In the alternative *Continuous monitor* function is continuously activated.

CurrUnsymPU: Unsymmetrical magnitude of lowest phase current compared to the highest, set in % of the highest phase current. Natural difference between phase currents in breaker-and-a-half installations must be considered. For circuit breakers in breaker-and-a-half configured switch yards there might be natural unbalance currents through the breaker. This is due to the existence of low impedance current paths in the switch yard. This phenomenon must be considered in the setting of the parameter.

CurrRelPU: Current magnitude for release of the function in % of *IBase*.

8.11 Directional underpower protection GUPPDUP (37)

8.11.1 Identification

Function description	IEC 61850 identification	IEC 60617 identification	ANSI/IEEE C37.2 device number
Directional underpower protection	GUPPDUP	P < → 2	37

8.11.2 Application

The task of a generator in a power plant is to convert mechanical energy available as a torque on a rotating shaft to electric energy.

Sometimes, the mechanical power from a prime mover may decrease so much that it does not cover bearing losses and ventilation losses. Then, the synchronous generator becomes a synchronous motor and starts to take electric power from the rest of the power system. This operating state, where individual synchronous machines operate as motors, implies no risk for the machine itself. If the generator under consideration is very large and if it consumes lots of electric power, it may be desirable to disconnect it to ease the task for the rest of the power system.

Often, the motoring condition may imply that the turbine is in a very dangerous state. The task of the reverse power protection is to protect the turbine and not to protect the generator itself.

Steam turbines easily become overheated if the steam flow becomes too low or if the steam ceases to flow through the turbine. Therefore, turbo-generators should have reverse power protection. There are several contingencies that may cause reverse power: break of a main steam pipe, damage to one or more blades in the steam turbine or inadvertent closing of the main stop valves. In the last case, it is highly desirable to have a reliable reverse power protection. It may prevent damage to an otherwise undamaged plant.

During the routine shutdown of many thermal power units, the reverse power protection gives the tripping impulse to the generator breaker (the unit breaker). By doing so, one prevents the disconnection of the unit before the mechanical power has become zero. Earlier disconnection would cause an acceleration of the turbine generator at all routine shutdowns. This should have caused overspeed and high centrifugal stresses.

When the steam ceases to flow through a turbine, the cooling of the turbine blades will disappear. Now, it is not possible to remove all heat generated by the windage losses. Instead, the heat will increase the temperature in the steam turbine and especially of the blades. When a steam turbine rotates without steam supply, the electric power

consumption will be about 2% of rated power. Even if the turbine rotates in vacuum, it will soon become overheated and damaged. The turbine overheats within minutes if the turbine loses the vacuum.

The critical time to overheating a steam turbine varies from about 0.5 to 30 minutes depending on the type of turbine. A high-pressure turbine with small and thin blades will become overheated more easily than a low-pressure turbine with long and heavy blades. The conditions vary from turbine to turbine and it is necessary to ask the turbine manufacturer in each case.

Power to the power plant auxiliaries may come from a station service transformer connected to the secondary side of the step-up transformer. Power may also come from a start-up service transformer connected to the external network. One has to design the reverse power protection so that it can detect reverse power independent of the flow of power to the power plant auxiliaries.

Hydro turbines tolerate reverse power much better than steam turbines do. Only Kaplan turbine and bulb turbines may suffer from reverse power. There is a risk that the turbine runner moves axially and touches stationary parts. They are not always strong enough to withstand the associated stresses.

Ice and snow may block the intake when the outdoor temperature falls far below zero. Branches and leaves may also block the trash gates. A complete blockage of the intake may cause cavitations. The risk for damages to hydro turbines can justify reverse power protection in unattended plants.

A hydro turbine that rotates in water with closed wicket gates will draw electric power from the rest of the power system. This power will be about 10% of the rated power. If there is only air in the hydro turbine, the power demand will fall to about 3%.

Diesel engines should have reverse power protection. The generator will take about 15% of its rated power or more from the system. A stiff engine may require perhaps 25% of the rated power to motor it. An engine that is good run in might need no more than 5%. It is necessary to obtain information from the engine manufacturer and to measure the reverse power during commissioning.

Gas turbines usually do not require reverse power protection.

Figure 291 illustrates the reverse power protection with underpower protection and with overpower protection. The underpower protection gives a higher margin and should provide better dependability. On the other hand, the risk for unwanted operation immediately after synchronization may be higher. One should set the underpower protection (reference angle set to 0) to trip if the active power from the generator is less than about 2%. One should set the overpower protection (reference angle set to 180) to trip if the power flow from the network to the generator is higher than 1%.

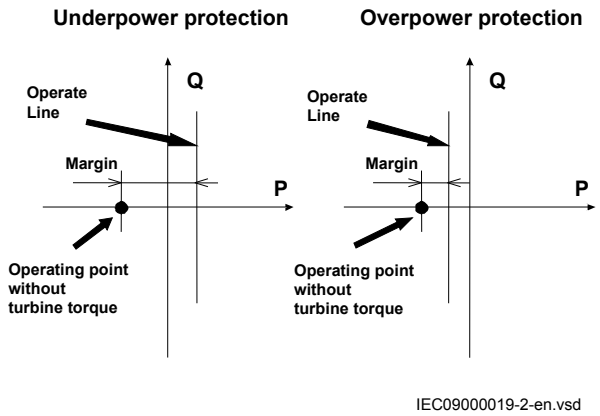

Figure 291: Reverse power protection with underpower or overpower protection

8.11.3 Setting guidelines

GlobalBaseSel: Selects the global base value group used by the function to define (*IBase*), (*VBase*) and (*SBase*).

Operation: With the parameter *Operation* the function can be set *Enabled*/*Disabled*.

Mode: The voltage and current used for the power measurement. The setting possibilities are shown in table 38.

Table 38: Complex power calculation

Set value *Mode*	Formula used for complex power calculation
A, B, C	$\bar{S} = \bar{V}_A \cdot \bar{I}_A^* + \bar{V}_B \cdot \bar{I}_B^* + \bar{V}_C \cdot \bar{I}_C^*$ (Equation 504)
Arone	$\bar{S} = \bar{V}_{AB} \cdot \bar{I}_A^* - \bar{V}_{BC} \cdot \bar{I}_C^*$ (Equation 505)
PosSeq	$\bar{S} = 3 \cdot \bar{V}_{PosSeq} \cdot \bar{I}_{PosSeq}^*$ (Equation 506)
AB	$\bar{S} = \bar{V}_{AB} \cdot (\bar{I}_A^* - \bar{I}_B^*)$ (Equation 507)
BC	$\bar{S} = \bar{V}_{BC} \cdot (\bar{I}_B^* - \bar{I}_C^*)$ (Equation 508)
Table continues on next page	

Set value *Mode*	Formula used for complex power calculation
CA	$\bar{S} = \bar{V}_{CA} \cdot (\bar{I}_C^* - \bar{I}_A^*)$ (Equation 509)
A	$\bar{S} = 3 \cdot \bar{V}_A \cdot \bar{I}_A^*$ (Equation 510)
B	$\bar{S} = 3 \cdot \bar{V}_B \cdot \bar{I}_B^*$ (Equation 511)
C	$\bar{S} = 3 \cdot \bar{V}_C \cdot \bar{I}_C^*$ (Equation 512)

The function has two stages that can be set independently.

With the parameter *OpMode1(2)* the function can be set *Enabled*/*Disabled*.

The function gives trip if the power component in the direction defined by the setting *Angle1(2)* is smaller than the set pick up power value *Power1(2)*

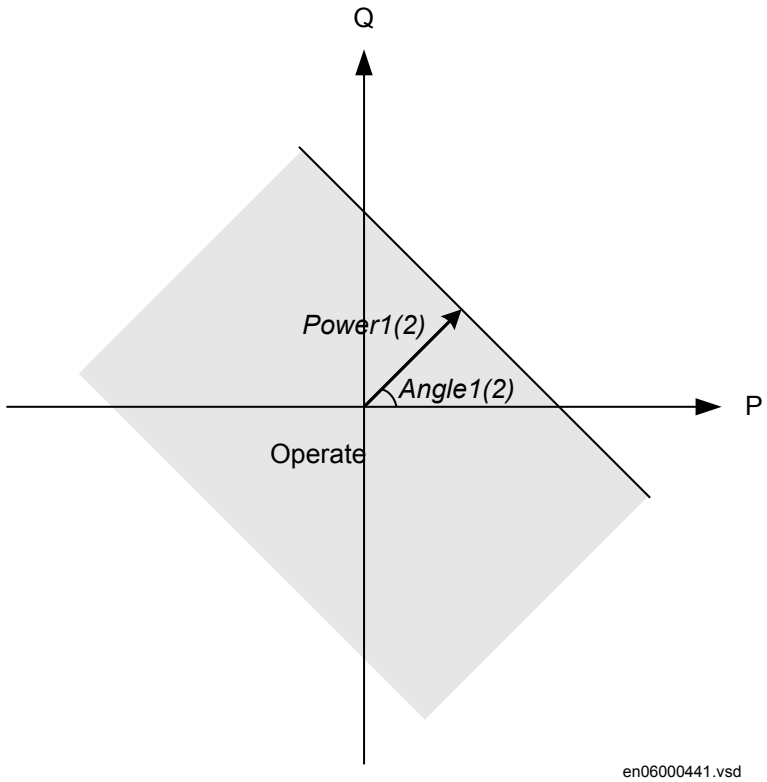

Figure 292: Underpower mode

The setting *Power1(2)* gives the power component pick up value in the *Angle1(2)* direction. The setting is given in p.u. of the generator rated power, see equation 513.

Minimum recommended setting is 0.2% of S_N when metering class CT inputs into the IED are used.

$$S_N = \sqrt{3} \cdot VBase \cdot IBase$$

(Equation 513)

The setting *Angle1(2)* gives the characteristic angle giving maximum sensitivity of the power protection function. The setting is given in degrees. For active power the set angle should be 0° or 180°. 0° should be used for generator low forward active power protection.

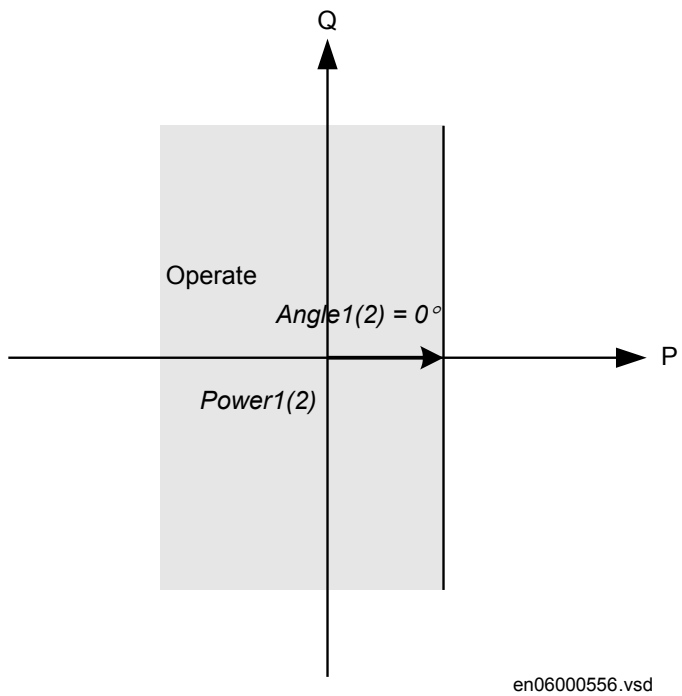

Figure 293: For low forward power the set angle should be 0° in the underpower function

TripDelay1(2) is set in seconds to give the time delay for trip of the stage after pick up.

Hysteresis1(2) is given in p.u. of generator rated power according to equation 514.

$$S_N = \sqrt{3} \cdot VBase \cdot IBase$$

(Equation 514)

The drop out power will be *Power1(2) + Hysteresis1(2)*.

The possibility to have low pass filtering of the measured power can be made as shown in the formula:

$$S = TD \cdot S_{Old} + (1 - TD) \cdot S_{Calculated}$$

(Equation 515)

Where

S	is a new measured value to be used for the protection function
S_{old}	is the measured value given from the function in previous execution cycle
$S_{Calculated}$	is the new calculated value in the present execution cycle
TD	is settable parameter

The value of *k=0.92* is recommended in generator applications as the trip delay is normally quite long.

The calibration factors for current and voltage measurement errors are set % of rated current/voltage:

IMagComp5, IMagComp30, IMagComp100

VMagComp5, VMagComp30, VMagComp100

IMagComp5, IMagComp30, IMagComp100

The angle compensation is given as difference between current and voltage angle errors.

The values are given for operating points 5, 30 and 100% of rated current/voltage. The values should be available from instrument transformer test protocols.

8.12 Directional overpower protection GOPPDOP (32)

8.12.1 Identification

Function description	IEC 61850 identification	IEC 60617 identification	ANSI/IEEE C37.2 device number
Directional overpower protection	GOPPDOP	P > → 2	32

8.12.2 Application

The task of a generator in a power plant is to convert mechanical energy available as a torque on a rotating shaft to electric energy.

Sometimes, the mechanical power from a prime mover may decrease so much that it does not cover bearing losses and ventilation losses. Then, the synchronous generator becomes a synchronous motor and starts to take electric power from the rest of the power system. This operating state, where individual synchronous machines operate as motors, implies no risk for the machine itself. If the generator under consideration is very large and if it consumes lots of electric power, it may be desirable to disconnect it to ease the task for the rest of the power system.

Often, the motoring condition may imply that the turbine is in a very dangerous state. The task of the reverse power protection is to protect the turbine and not to protect the generator itself.

Steam turbines easily become overheated if the steam flow becomes too low or if the steam ceases to flow through the turbine. Therefore, turbo-generators should have reverse power protection. There are several contingencies that may cause reverse power: break of a main steam pipe, damage to one or more blades in the steam turbine or inadvertent closing of the main stop valves. In the last case, it is highly desirable to have a reliable reverse power protection. It may prevent damage to an otherwise undamaged plant.

During the routine shutdown of many thermal power units, the reverse power protection gives the tripping impulse to the generator breaker (the unit breaker). By doing so, one prevents the disconnection of the unit before the mechanical power has become zero. Earlier disconnection would cause an acceleration of the turbine generator at all routine shutdowns. This should have caused overspeed and high centrifugal stresses.

When the steam ceases to flow through a turbine, the cooling of the turbine blades will disappear. Now, it is not possible to remove all heat generated by the windage losses. Instead, the heat will increase the temperature in the steam turbine and especially of the blades. When a steam turbine rotates without steam supply, the electric power consumption will be about 2% of rated power. Even if the turbine rotates in vacuum, it will soon become overheated and damaged. The turbine overheats within minutes if the turbine loses the vacuum.

The critical time to overheating of a steam turbine varies from about 0.5 to 30 minutes depending on the type of turbine. A high-pressure turbine with small and thin blades will become overheated more easily than a low-pressure turbine with long and heavy blades. The conditions vary from turbine to turbine and it is necessary to ask the turbine manufacturer in each case.

Power to the power plant auxiliaries may come from a station service transformer connected to the primary side of the step-up transformer. Power may also come from a start-up service transformer connected to the external network. One has to design the reverse power protection so that it can detect reverse power independent of the flow of power to the power plant auxiliaries.

Hydro turbines tolerate reverse power much better than steam turbines do. Only Kaplan turbine and bulb turbines may suffer from reverse power. There is a risk that the turbine runner moves axially and touches stationary parts. They are not always strong enough to withstand the associated stresses.

Ice and snow may block the intake when the outdoor temperature falls far below zero. Branches and leaves may also block the trash gates. A complete blockage of the intake

may cause cavitations. The risk for damages to hydro turbines can justify reverse power protection in unattended plants.

A hydro turbine that rotates in water with closed wicket gates will draw electric power from the rest of the power system. This power will be about 10% of the rated power. If there is only air in the hydro turbine, the power demand will fall to about 3%.

Diesel engines should have reverse power protection. The generator will take about 15% of its rated power or more from the system. A stiff engine may require perhaps 25% of the rated power to motor it. An engine that is well run in might need no more than 5%. It is necessary to obtain information from the engine manufacturer and to measure the reverse power during commissioning.

Gas turbines usually do not require reverse power protection.

Figure 294 illustrates the reverse power protection with underpower IED and with overpower IED. The underpower IED gives a higher margin and should provide better dependability. On the other hand, the risk for unwanted operation immediately after synchronization may be higher. One should set the underpower IED to trip if the active power from the generator is less than about 2%. One should set the overpower IED to trip if the power flow from the network to the generator is higher than 1%.

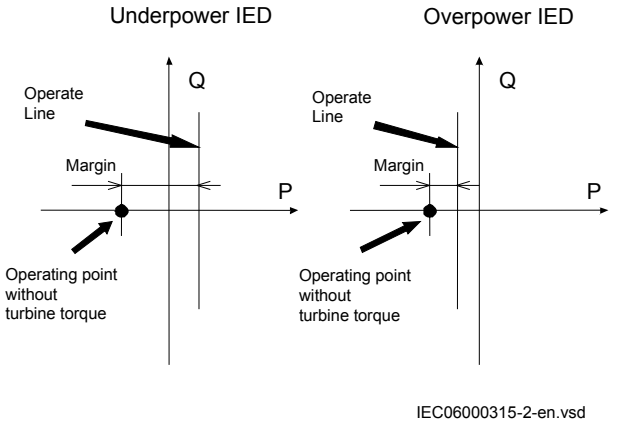

Figure 294: Reverse power protection with underpower IED and overpower IED

8.12.3 Setting guidelines

GlobalBaseSel: Selects the global base value group used by the function to define (*IBase*), (*VBase*) and (*SBase*).

Operation: With the parameter *Operation* the function can be set *Enabled*/*Disabled*.

Mode: The voltage and current used for the power measurement. The setting possibilities are shown in table 39.

Table 39: Complex power calculation

Set value *Mode*	Formula used for complex power calculation
A,B,C	$\bar{S} = \bar{V}_A \cdot \bar{I}_A^* + \bar{V}_B \cdot \bar{I}_B^* + \bar{V}_C \cdot \bar{I}_C^*$ (Equation 517)
Arone	$\bar{S} = \bar{V}_{AB} \cdot \bar{I}_A^* - \bar{V}_{BC} \cdot \bar{I}_C^*$ (Equation 518)
PosSeq	$\bar{S} = 3 \cdot \bar{V}_{PosSeq} \cdot \bar{I}_{PosSeq}^*$ (Equation 519)
A,B	$\bar{S} = \bar{V}_{AB} \cdot (\bar{I}_A^* - \bar{I}_B^*)$ (Equation 520)
B,C	$\bar{S} = \bar{V}_{BC} \cdot (\bar{I}_B^* - \bar{I}_C^*)$ (Equation 521)
C,A	$\bar{S} = \bar{V}_{CA} \cdot (\bar{I}_C^* - \bar{I}_A^*)$ (Equation 522)
A	$\bar{S} = 3 \cdot \bar{V}_A \cdot \bar{I}_A^*$ (Equation 523)
B	$\bar{S} = 3 \cdot \bar{V}_B \cdot \bar{I}_B^*$ (Equation 524)
C	$\bar{S} = 3 \cdot \bar{V}_C \cdot \bar{I}_C^*$ (Equation 525)

The function has two stages that can be set independently.

With the parameter *OpMode1(2)* the function can be set *Enabled*/*Disabled*.

The function gives trip if the power component in the direction defined by the setting *Angle1(2)* is larger than the set pick up power value *Power1(2)*

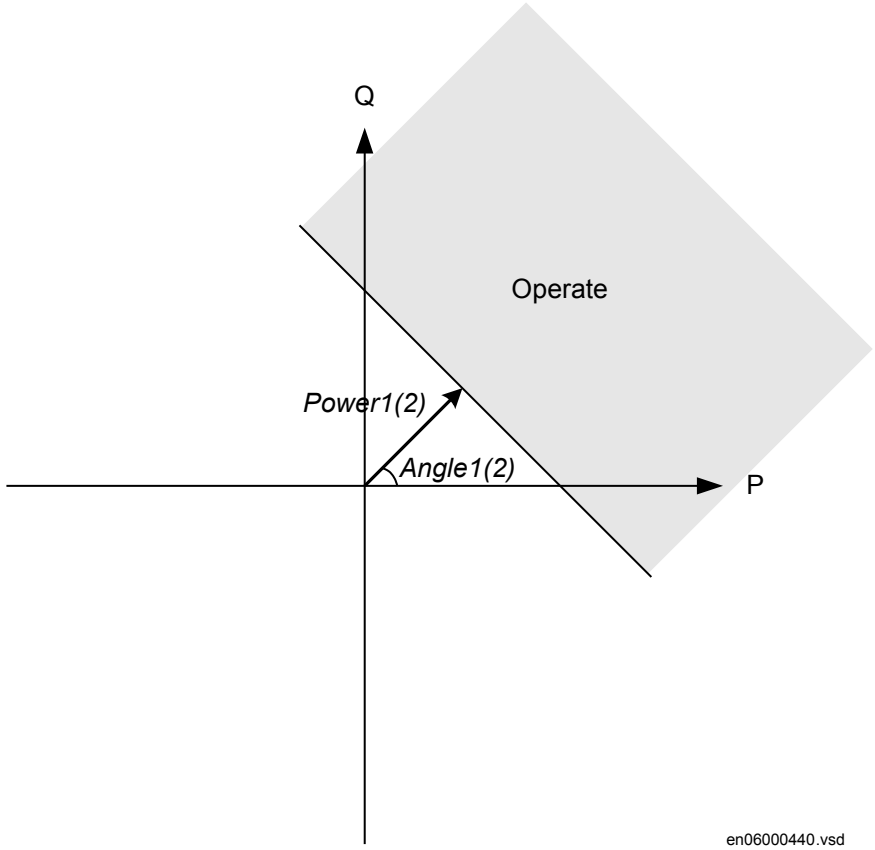

Figure 295: Overpower mode

The setting *Power1(2)* gives the power component pick up value in the *Angle1(2)* direction. The setting is given in p.u. of the generator rated power, see equation 526.

Minimum recommended setting is 0.2% of S_N when metering class CT inputs into the IED are used.

$$S_N = \sqrt{3} \cdot VBase \cdot IBase$$

(Equation 526)

The setting *Angle1(2)* gives the characteristic angle giving maximum sensitivity of the power protection function. The setting is given in degrees. For active power the set angle should be 0° or 180°. 180° should be used for generator reverse power protection.

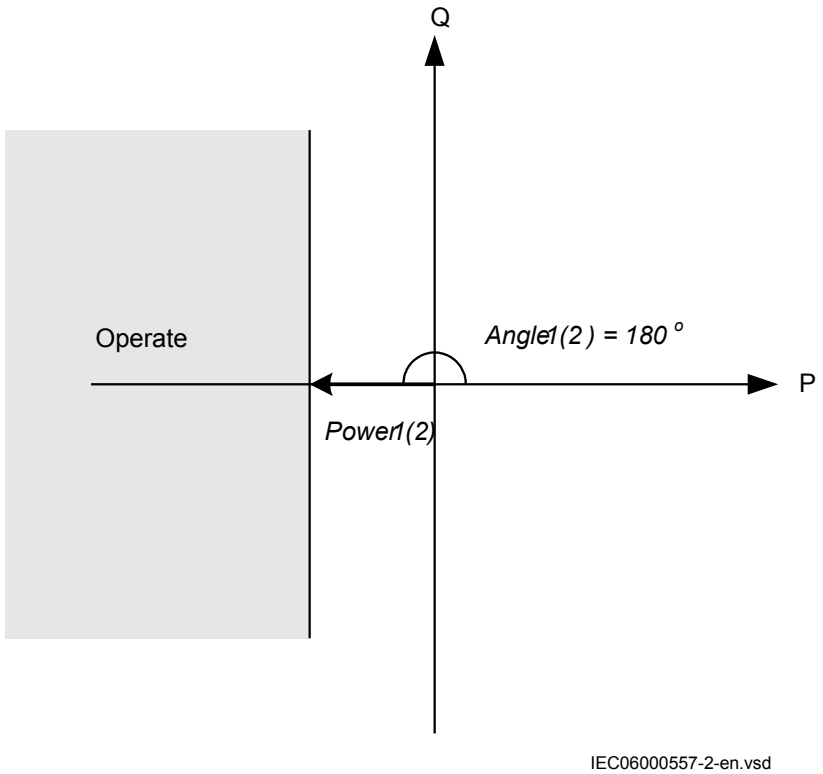

Figure 296: For reverse power the set angle should be 180° in the overpower function

TripDelay1(2) is set in seconds to give the time delay for trip of the stage after pick up.

Hysteresis1(2) is given in p.u. of generator rated power according to equation 527.

$$S_N = \sqrt{3} \cdot VBase \cdot IBase$$

(Equation 527)

The drop out power will be *Power1(2) - Hysteresis1(2)*.

The possibility to have low pass filtering of the measured power can be made as shown in the formula:

$$S = TD \cdot S_{Old} + (1 - TD) \cdot S_{Calculated}$$

(Equation 528)

Where	
S	is a new measured value to be used for the protection function
S_{old}	is the measured value given from the function in previous execution cycle
$S_{Calculated}$	is the new calculated value in the present execution cycle
TD	is settable parameter

The value of *TD=0.92* is recommended in generator applications as the trip delay is normally quite long.

The calibration factors for current and voltage measurement errors are set % of rated current/voltage:

IMagComp5, IMagComp30, IMagComp100

VMagComp5, VMagComp30, VMagComp100

IAngComp5, IAngComp30, IAngComp100

The angle compensation is given as difference between current and voltage angle errors.

The values are given for operating points 5, 30 and 100% of rated current/voltage. The values should be available from instrument transformer test protocols.

8.13 Broken conductor check BRCPTOC (46)

8.13.1 Identification

Function description	IEC 61850 identification	IEC 60617 identification	ANSI/IEEE C37.2 device number
Broken conductor check	BRCPTOC	-	46

8.13.2 Application

Conventional protection functions can not detect the broken conductor condition. Broken conductor check (BRCPTOC, 46) function, consisting of continuous current

unsymmetrical check on the line where the IED connected will give alarm or trip at detecting broken conductors.

8.13.3 Setting guidelines

Broken conductor check BRCPTOC (46) must be set to detect open phase/s (series faults) with different loads on the line. BRCPTOC (46) must at the same time be set to not operate for maximum asymmetry which can exist due to, for example, not transposed power lines.

All settings are in primary values or percentage.

Set *IBase* (given in *GlobalBaseSel*) to power line rated current or CT rated current.

Set minimum operating level per phase *Pickup_PH* to typically 10-20% of rated current.

Set the unsymmetrical current, which is relation between the difference of the minimum and maximum phase currents to the maximum phase current to typical *Pickup_ub = 50%*.

Note that it must be set to avoid problem with asymmetry under minimum operating conditions.

Set the time delay *tOper = 5 - 60* seconds and reset time *tReset = 0.010 - 60.000* seconds.

8.14 Voltage-restrained time overcurrent protection VRPVOC (51V)

8.14.1 Identification

Function description	IEC 61850 identification	IEC 60617 identification	ANSI/IEEE C37.2 device number
Voltage-restrained time overcurrent protection	VRPVOC	I>/U<	51V

8.14.2 Application

A breakdown of the insulation between phase conductors or a phase conductor and ground results in a short-circuit or a ground fault. Such faults can result in large fault currents and may cause severe damage to the power system primary equipment.

A typical application of the voltage-restrained time overcurrent protection is in the generator protection system, where it is used as backup protection. If a phase-to-phase fault affects a generator, the fault current amplitude is a function of time, and it depends on generator characteristic (reactances and time constants), its load conditions (immediately before the fault) and excitation system performance and characteristic. So the fault current amplitude may decay with time. A voltage-restrained overcurrent relay can be set in order to remain in the picked-up state in spite of the current decay, and perform a backup trip in case of failure of the main protection.

The IED can be provided with a voltage-restrained time overcurrent protection (VRPVOC, 51V). The VRPVOC (51V) function is always connected to three-phase current and three-phase voltage input in the configuration tool, but it will always measure the maximum phase current and the minimum phase-to-phase voltage.

VRPVOC (51V) function module has two independent protection each consisting of:

- One overcurrent step with the following built-in features:
  - Selectable definite time delay or Inverse Time IDMT characteristic
  - Voltage restrained/controlled feature is available in order to modify the pick-up level of the overcurrent stage in proportion to the magnitude of the measured voltage
- One undervoltage step with the following built-in feature:
  - Definite time delay

The undervoltage function can be enabled or disabled. Sometimes in order to obtain desired application functionality it is necessary to provide interaction between the two protection elements within the VRPVOC (51V) function by appropriate IED configuration (for example, overcurrent protection with under-voltage seal-in).

8.14.2.1 Base quantities

GlobalBaseSel defines the particular Global Base Values Group where the base quantities of the function are set. In that Global Base Values Group:

IBase shall be entered as rated phase current of the protected object in primary amperes.

VBase shall be entered as rated phase-to-phase voltage of the protected object in primary kV.

8.14.2.2 Application possibilities

VRPVOC (51V) function can be used in one of the following three applications:

- voltage controlled over-current
- voltage restrained over-current
- overcurrent protection with under-voltage seal-in.

8.14.2.3 Undervoltage seal-in

In the case of a generator with a static excitation system, which receives its power from the generator terminals, the magnitude of a sustained phase short-circuit current depends on the generator terminal voltage. In case of a nearby multi-phase fault, the generator terminal voltage may drop to quite low level, for example, less than 25%, and the generator fault current may consequently fall below the pickup level of the overcurrent protection. The short-circuit current may drop below the generator rated current after 0.5...1 s. Also, for generators with an excitation system not fed from the generator terminals, a fault can occur when the automatic voltage regulator is out of service. In such cases, to ensure tripping under such conditions, overcurrent protection with undervoltage seal-in can be used.

To apply the VRPVOC(51V) function, the configuration is done according to figure 297. As seen in the figure, the pickup of the overcurrent stage will enable the undervoltage stage. Once enabled, the undervoltage stage will start a timer, which causes function tripping, if the voltage does not recover above the set value. To ensure a proper reset, the function is blocked two seconds after the trip signal is issued.

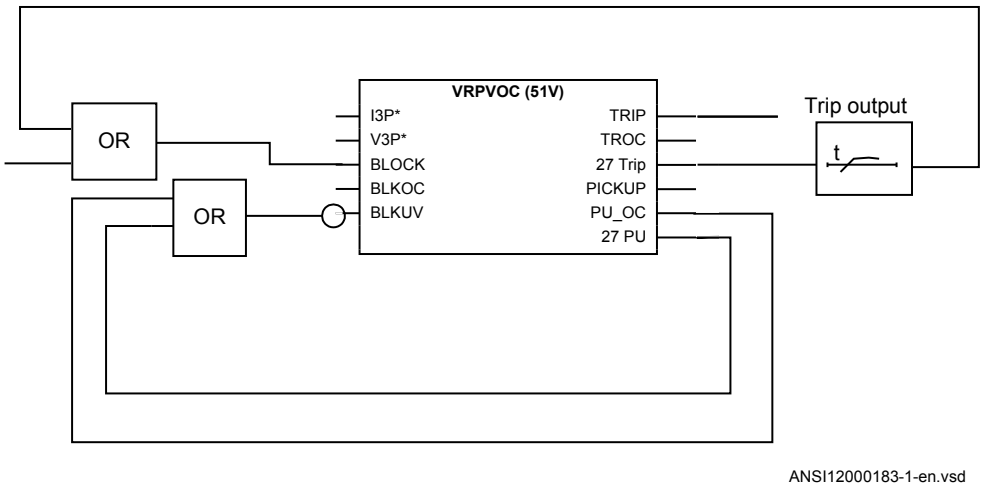

Figure 297: Undervoltage seal-in of current pickup

8.14.3 Setting guidelines

8.14.3.1 Explanation of the setting parameters

Operation: Set to *On* in order to activate the function; set to *Off* to switch off the complete function.

Pickup_Curr: Operation phase current level given in % of *IBase*.

Characterist: Selection of time characteristic: Definite time delay and different types of inverse time characteristics are available; see Technical Manual for details.

tDef_OC: Definite time delay. It is used if definite time characteristic is chosen; it shall be set to *0 s* if the inverse time characteristic is chosen and no additional delay shall be added.

k: Time multiplier for inverse time delay.

tMin: Minimum operation time for all inverse time characteristics. At high currents the inverse time characteristic might give a very short operation time. By setting this parameter the operation time of the step can never be shorter than the setting.

Operation_UV: it sets *On*/*Off* the operation of the under-voltage stage.

PickUp_Volt: Operation phase-to-phase voltage level given in % of *VBase* for the under-voltage stage. Typical setting may be, for example, in the range from 70% to 80% of the rated voltage of the generator.

tDef_UV: Definite time delay. Since it is related to a backup protection function, a long time delay (for example *0.5* s or more) is typically used.

EnBlkLowV: This parameter enables the internal block of the undervoltage stage for low voltage condition; the voltage level is defined by the parameter *BlkLowVolt*.

BlkLowVolt: Voltage level under which the internal blocking of the undervoltage stage is activated; it is set in % of *VBase*. This setting must be lower than the setting *StartVolt*. The setting can be very low, for example, lower than 10%.

VDepMode: Selection of the characteristic of the start level of the overcurrent stage as a function of the phase-to-phase voltage; two options are available: Slope and Step. See Technical Manual for details about the characteristics.

VDepFact: *Slope mode*: it is the pickup level of the overcurrent stage given in % of *Pickup_Curr* when the voltage is lower than 25% of *VBase*; so it defines the first point of the characteristic (*VDepFact***Pickup_Curr*/100**IBase* ; 0.25**VBase*).

Step mode: it is the pickup level of the overcurrent stage given in % of *Pickup_Curr* when the voltage is lower than *VHighLimit*/100**VBase*.

VHighLimit: when the measured phase-to-phase voltage is higher than *VHighLimit*/100**VBase*, than the pickup level of the overcurrent stage is *Pickup_Curr*/100**IBase*. In particular, in *Slope* mode it define the second point of the characteristic (*Pickup_Curr*/100**IBase* ; *VHighLimit*/100**VBase*).

8.14.3.2 Voltage restrained overcurrent protection for generator and step-up transformer

An example of how to use VRPVOC (51V) function to provide voltage restrained overcurrent protection for a generator is given below. Let us assume that the time coordination study gives the following required settings:

- Inverse Time Over Current IDMT curve: IEC very inverse, with multiplier k=1
- Pickup current of 185% of generator rated current at rated generator voltage
- Pickup current 25% of the original pickup current value for generator voltages below 25% of rated voltage

To ensure proper operation of the function:

1. Set *Operation* to *Enabled*
2. Set *GlobalBaseSel* to the right value in order to select the Global Base Values Group with *VBase* and *IBase* equal to the rated phase-to-phase voltage and the rated phase current of the generator.
3. Connect three-phase generator currents and voltages to VRPVOC (51V) in the application configuration.
4. Select *Characterist* to match type of overcurrent curves used in the network *IEC Very inv.*
5. Set the multiplier *k = 1* (default value).
6. Set *tDef_OC = 0.00* s, in order to add no additional delay to the trip time defined by the inverse time characteristic.
7. If required, set the minimum operating time for this curve by using the parameter *t_MinTripDelay* (default value 0.05 s).
8. Set *PickupCurr* to the value 185%.
9. Set *VDepMode* to *Slope* (default value).
10. Set *VDepFact* to the value 25% (default value).
11. Set *VHighLimit* to the value 100% (default value).

All other settings can be left at the default values.

8.14.3.3 Overcurrent protection with undervoltage seal-in

To obtain this functionality, the IED application configuration shall include a logic in accordance to figure 297 and, of course, the relevant three-phase generator currents and voltages shall be connected to VRPVOC. Let us assume that, taking into account the

characteristic of the generator, the excitation system and the short circuit study, the following settings are required:

- Pickup current of the overcurrent stage: 150% of generator rated current at rated generator voltage;
- Pickup voltage of the undervoltage stage: 70% of generator rated voltage;
- Trip time: 3.0 s.

The overcurrent stage and the undervoltage stage shall be set in the following way:

1. Set *Operation* to *Enabled*.
2. Set *GlobalBaseSel* to the right value in order to select the Global Base Values Group with *VBase* and *IBase* equal to the rated phase-to-phase voltage and the rated phase current of the generator.
3. Set *StartCurr* to the value *150*%.
4. Set *Characteristic* to *IEC Def. Time*.
5. Set *tDef_OC* to *6000.00* s, if no trip of the overcurrent stage is required.
6. Set *VDepFact* to the value *100*% in order to ensure that the pickup value of the overcurrent stage is constant, irrespective of the magnitude of the generator voltage.
7. Set *Operation_UV* to *Enabled* to activate the undervoltage stage.
8. Set *StartVolt* to the values *70*%.
9. Set *tDef_UV* to *3.0* s.
10. Set *EnBlkLowV* to *Disabled* (default value) to disable the cut-off level for low-voltage of the undervoltage stage.

The other parameters may be left at their default value.

Section 9 Voltage protection

9.1 Two step undervoltage protection UV2PTUV (27)

9.1.1 Identification

Function description	IEC 61850 identification	IEC 60617 identification	ANSI/IEEE C37.2 device number
Two step undervoltage protection	UV2PTUV	*3U<*	27

9.1.2 Application

Two-step undervoltage protection function (UV2PTUV ,27) is applicable in all situations, where reliable detection of low phase voltages is necessary. It is used also as a supervision and fault detection function for other protection functions, to increase the security of a complete protection system.

UV2PTUV (27) is applied to power system elements, such as generators, transformers, motors and power lines in order to detect low voltage conditions. Low voltage conditions are caused by abnormal operation or fault in the power system. UV2PTUV (27) is used in combination with overcurrent protections, either as restraint or in logic "and gates" of the trip signals issued by the two functions. Other applications are the detection of "no voltage" condition, for example, before the energization of a HV line or for automatic breaker trip in case of a blackout. UV2PTUV (27) is also used to initiate voltage correction measures, like insertion of shunt capacitor banks to compensate for reactive load and thereby increasing the voltage. The function has a high measuring accuracy and setting hysteresis to allow applications to control reactive load.

UV2PTUV (27) is used to disconnect apparatuses, like electric motors, which will be damaged when subject to service under low voltage conditions. UV2PTUV (27) deals with low voltage conditions at power system frequency, which can be caused by the following reasons:

1. Malfunctioning of a voltage regulator or wrong settings under manual control (symmetrical voltage decrease).
2. Overload (symmetrical voltage decrease).
3. Short circuits, often as phase-to-ground faults (unsymmetrical voltage decrease).

UV2PTUV (27) prevents sensitive equipment from running under conditions that could cause their overheating and thus shorten their life time expectancy. In many cases, it is a useful function in circuits for local or remote automation processes in the power system.

9.1.3 Setting guidelines

All the voltage conditions in the system where UV2PTUV (27) performs its functions should be considered. The same also applies to the associated equipment, its voltage and time characteristic.

There is a very wide application area where general undervoltage functions are used. All voltage related settings are made as a percentage of the settings base voltage *VBase* and base current *IBase*, which normally is set to the primary rated voltage level (phase-to-phase) of the power system or the high voltage equipment under consideration.

The setting for UV2PTUV (27) is normally not critical, since there must be enough time available for the main protection to clear short circuits andground faults.

Some applications and related setting guidelines for the voltage level are described in the following sections.

9.1.3.1 Equipment protection, such as for motors and generators

The setting must be below the lowest occurring "normal" voltage and above the lowest acceptable voltage for the equipment.

9.1.3.2 Disconnected equipment detection

The setting must be below the lowest occurring "normal" voltage and above the highest occurring voltage, caused by inductive or capacitive coupling, when the equipment is disconnected.

9.1.3.3 Power supply quality

The setting must be below the lowest occurring "normal" voltage and above the lowest acceptable voltage, due to regulation, good practice or other agreements.

9.1.3.4 Voltage instability mitigation

This setting is very much dependent on the power system characteristics, and thorough studies have to be made to find the suitable levels.

9.1.3.5 Backup protection for power system faults

The setting must be below the lowest occurring "normal" voltage and above the highest occurring voltage during the fault conditions under consideration.

9.1.3.6 Settings for Two step undervoltage protection

The following settings can be done for Two step undervoltage protection UV2PTUV (27):

ConnType: Sets whether the measurement shall be phase-to-ground fundamental value, phase-to-phase fundamental value, phase-to-ground RMS value or phase-to-phase RMS value.

Operation: *Disabled* or *Enabled*.

VBase (given in *GlobalBaseSel*): Base voltage phase-to-phase in primary kV. This voltage is used as reference for voltage setting. UV2PTUV (27) measures selectively phase-to-ground voltages, or phase-to-phase voltage chosen by the setting *ConnType*. The function will operate if the voltage gets lower than the set percentage of *VBase*. When *ConnType* is set to *PhN DFT* or *PhN RMS* then the IED automatically divides set value for *VBase* by √3. *VBase* is used when *ConnType* is set to *PhPh DFT* or *PhPh RMS*. Therefore, always set *VBase* as rated primary phase-to-phase voltage of the protected object. This means operation for phase-to-ground voltage under:

$$V < (\%) \cdot VBase(kV) \Big/ \sqrt{3}$$

(Equation 529)

and operation for phase-to-phase voltage under:

$$\text{Vpickup} < (\%) \cdot \text{VBase(kV)}$$

(Equation 530)

The below described setting parameters are identical for the two steps (*n* = 1 or 2). Therefore, the setting parameters are described only once.

Characteristicn: This parameter gives the type of time delay to be used. The setting can be *Definite time*, *Inverse Curve A*, *Inverse Curve B*, *Prog. inv. curve*. The selection is dependent on the protection application.

OpModen: This parameter describes how many of the three measured voltages that should be below the set level to give operation for step n. The setting can be *1 out of 3*, *2 out of 3* or *3 out of 3*. In most applications, it is sufficient that one phase voltage is low to give operation. If UV2PTUV (27) shall be insensitive for single phase-to-ground faults, *2 out of 3* can be chosen. In subtransmission and transmission networks the undervoltage function is mainly a system supervision function and 3 out of 3 is selected.

Pickupn: Set operate undervoltage operation value for step *n*, given as % of the parameter *VBase*. The setting is highly dependent of the protection application. It is essential to consider the minimum voltage at non-faulted situations. Normally this voltage is larger than 90% of nominal voltage.

tn: time delay of step *n*, given in s. This setting is dependent of the protection application. In many applications the protection function shall not directly trip when there is a short circuit or ground faults in the system. The time delay must be coordinated to the short circuit protections.

tResetn: Reset time for step *n* if definite time delay is used, given in s. The default value is 25 ms.

tnMin: Minimum operation time for inverse time characteristic for step *n*, given in s. When using inverse time characteristic for the undervoltage function during very low voltages can give a short operation time. This might lead to unselective trip. By setting *t1Min* longer than the operation time for other protections such unselective tripping can be avoided.

ResetTypeCrvn: This parameter for inverse time characteristic can be set to *Instantaneous*, *Frozen time*, *Linearly decreased*. The default setting is*Instantaneous*.

tIResetn: Reset time for step *n* if inverse time delay is used, given in s. The default value is 25 ms.

TDn: Time multiplier for inverse time characteristic. This parameter is used for coordination between different inverse time delayed undervoltage protections.

ACrvn, *BCrvn*, *CCrvn*, *DCrvn*, *PCrvn*: Parameters to set to create programmable under voltage inverse time characteristic. Description of this can be found in the technical reference manual.

CrvSatn: When the denominator in the expression of the programmable curve is equal to zero the time delay will be infinity. There will be an undesired discontinuity. Therefore, a tuning parameter *CrvSatn* is set to compensate for this phenomenon. In

the voltage interval Pickup> down to *Pickup*> · (1.0 - *CrvSatn*/100) the used voltage will be: *Pickup*> · (1.0 - *CrvSatn*/100). If the programmable curve is used this parameter must be calculated so that:

$$B \cdot \frac{CrvSatn}{100} - C > 0$$

(Equation 531)

IntBlkSeln: This parameter can be set to *Disabled*, *Block of trip*, *Block all*. In case of a low voltage the undervoltage function can be blocked. This function can be used to prevent function when the protected object is switched off. If the parameter is set *Block of trip* or *Block all* unwanted trip is prevented.

IntBlkStValn: Voltage level under which the blocking is activated set in % of *VBase*. This setting must be lower than the setting *Pickupn*. As switch of shall be detected the setting can be very low, that is, about 10%.

tBlkUVn: Time delay to block the undervoltage step *n* when the voltage level is below *IntBlkStValn*, given in s. It is important that this delay is shorter than the operate time delay of the undervoltage protection step.

9.2 Two step overvoltage protection OV2PTOV (59)

9.2.1 Identification

Function description	IEC 61850 identification	IEC 60617 identification	ANSI/IEEE C37.2 device number
Two step overvoltage protection	OV2PTOV	3U>	59

9.2.2 Application

Two step overvoltage protection OV2PTOV (59) is applicable in all situations, where reliable detection of high voltage is necessary. OV2PTOV (59) is used for supervision and detection of abnormal conditions, which, in combination with other protection functions, increase the security of a complete protection system.

High overvoltage conditions are caused by abnormal situations in the power system. OV2PTOV (59) is applied to power system elements, such as generators, transformers, motors and power lines in order to detect high voltage conditions. OV2PTOV (59) is used in combination with low current signals, to identify a transmission line, open in the remote end. In addition to that, OV2PTOV (59) is also used to initiate voltage correction measures, like insertion of shunt reactors, to compensate for low load, and thereby decreasing the voltage. The function has a high measuring accuracy and hysteresis setting to allow applications to control reactive load.

OV2PTOV (59) is used to disconnect apparatuses, like electric motors, which will be damaged when subject to service under high voltage conditions. It deals with high voltage conditions at power system frequency, which can be caused by:

1. Different kinds of faults, where a too high voltage appears in a certain power system, like metallic connection to a higher voltage level (broken conductor falling down to a crossing overhead line, transformer flash over fault from the high voltage winding to the low voltage winding and so on).
2. Malfunctioning of a voltage regulator or wrong settings under manual control (symmetrical voltage decrease).
3. Low load compared to the reactive power generation (symmetrical voltage decrease).
4. Ground-faults in high impedance grounded systems causes, beside the high voltage in the neutral, high voltages in the two non-faulted phases, (unsymmetrical voltage increase).

OV2PTOV (59) prevents sensitive equipment from running under conditions that could cause their overheating or stress of insulation material, and, thus, shorten their life time expectancy. In many cases, it is a useful function in circuits for local or remote automation processes in the power system.

9.2.3 Setting guidelines

The parameters for Two step overvoltage protection (OV2PTOV ,59) are set via the local HMI or PCM600.

All the voltage conditions in the system where OV2PTOV (59) performs its functions should be considered. The same also applies to the associated equipment, its voltage and time characteristic.

There is a very wide application area where general overvoltage functions are used. All voltage related settings are made as a percentage of a settable base primary voltage, which normally is set to the nominal voltage level (phase-to-phase) of the power system or the high voltage equipment under consideration.

The time delay for the OV2PTOV (59) can sometimes be critical and related to the size of the overvoltage - a power system or a high voltage component can withstand smaller

overvoltages for some time, but in case of large overvoltages the related equipment should be disconnected more rapidly.

Some applications and related setting guidelines for the voltage level are given below:

The hysteresis is for overvoltage functions very important to prevent that a transient voltage over set level is not “sealed-in” due to a high hysteresis. Typical values should be ≤ 0.5%.

9.2.3.1 Equipment protection, such as for motors, generators, reactors and transformers

High voltage will cause overexcitation of the core and deteriorate the winding insulation. The setting has to be well above the highest occurring "normal" voltage and well below the highest acceptable voltage for the equipment.

9.2.3.2 Equipment protection, capacitors

High voltage will deteriorate the dielectricum and the insulation. The setting has to be well above the highest occurring "normal" voltage and well below the highest acceptable voltage for the capacitor.

9.2.3.3 Power supply quality

The setting has to be well above the highest occurring "normal" voltage and below the highest acceptable voltage, due to regulation, good practice or other agreements.

9.2.3.4 High impedance grounded systems

In high impedance grounded systems, ground-faults cause a voltage increase in the non-faulty phases. Two step overvoltage protection (OV2PTOV, 59) is used to detect such faults. The setting must be above the highest occurring "normal" voltage and below the lowest occurring voltage during faults. A metallic single-phase ground-fault causes the non-faulted phase voltages to increase a factor of √3.

9.2.3.5 The following settings can be done for the two step overvoltage protection

ConnType: Sets whether the measurement shall be phase-to-ground fundamental value, phase-to-phase fundamental value, phase-to-ground RMS value or phase-to-phase RMS value.

Operation: *Disabled*/*Enabled*.

VBase (given in *GlobalBaseSel*): Base voltage phase to phase in primary kV. This voltage is used as reference for voltage setting. OV2PTOV (59) measures selectively phase-to-ground voltages, or phase-to-phase voltage chosen by the setting *ConnType*. The function will operate if the voltage gets lower than the set percentage of *VBase*. When *ConnType* is set to *PhN DFT* or *PhN RMS* then the IED automatically divides set value for *VBase* by √3. When *ConnType* is set to *PhPh DFT* or *PhPh RMS* then set value for *VBase* is used. Therefore, always set *VBase* as rated primary phase-to-phase ground voltage of the protected object. If phase to neutral (PhN) measurement is selected as setting, the operation of phase-to-earth over voltage is automatically divided by sqrt3. This means operation for phase-to-ground voltage over:

$$V > (\%) \cdot VBase(kV) / \sqrt{3}$$

(Equation 532)

and operation for phase-to-phase voltage over:

$$\text{Vpickup} > (\%) \cdot \text{VBase(kV)}$$

(Equation 533)

The below described setting parameters are identical for the two steps (n = 1 or 2). Therefore the setting parameters are described only once.

Characteristicn: This parameter gives the type of time delay to be used. The setting can be *Definite time*, *Inverse Curve A*, *Inverse Curve B*, *Inverse Curve C* or *I/Prog. inv. curve*. The choice is highly dependent of the protection application.

OpModen: This parameter describes how many of the three measured voltages that should be above the set level to give operation. The setting can be *1 out of 3*, *2 out of 3*, *3 out of 3*. In most applications it is sufficient that one phase voltage is high to give operation. If the function shall be insensitive for single phase-to-ground faults *1 out of 3* can be chosen, because the voltage will normally rise in the non-faulted phases at single phase-to-ground faults. In subtransmission and transmission networks the UV function is mainly a system supervision function and 3 out of 3 is selected.

Pickupn: Set operate overvoltage operation value for step *n*, given as % of *VBase*. The setting is highly dependent of the protection application. Here it is essential to consider the maximum voltage at non-faulted situations. Normally this voltage is less than 110% of nominal voltage.

tn: time delay of step *n*, given in s. The setting is highly dependent of the protection application. In many applications the protection function is used to prevent damages to the protected object. The speed might be important for example in case of protection of transformer that might be overexcited. The time delay must be co-ordinated with other automated actions in the system.

tResetn: Reset time for step *n* if definite time delay is used, given in s. The default value is 25 ms.

tnMin: Minimum operation time for inverse time characteristic for step *n*, given in s. For very high voltages the overvoltage function, using inverse time characteristic, can give very short operation time. This might lead to unselective trip. By setting *t1Min* longer than the operation time for other protections such unselective tripping can be avoided.

ResetTypeCrvn: This parameter for inverse time characteristic can be set: *Instantaneous*, *Frozen time*, *Linearly decreased*. The default setting is *Instantaneous*.

tIResetn: Reset time for step *n* if inverse time delay is used, given in s. The default value is 25 ms.

TDn: Time multiplier for inverse time characteristic. This parameter is used for co-ordination between different inverse time delayed undervoltage protections.

ACrvn, *BCrvn*, *CCrvn*, *DCrvn*, *PCrvn*: Parameters to set to create programmable under voltage inverse time characteristic. Description of this can be found in the technical reference manual.

CrvSatn: When the denominator in the expression of the programmable curve is equal to zero the time delay will be infinity. There will be an undesired discontinuity. Therefore a tuning parameter *CrvSatn* is set to compensate for this phenomenon. In the voltage interval *Pickup*> up to *Pickup*> · (1.0 + *CrvSatn*/100) the used voltage will be: *Pickup*> · (1.0 + *CrvSatn*/100). If the programmable curve is used, this parameter must be calculated so that:

$$B \cdot \frac{CrvSatn}{100} - C > 0$$

(Equation 534)

HystAbsn: Absolute hysteresis set in % of *VBase*. The setting of this parameter is highly dependent of the application. If the function is used as control for automatic switching of reactive compensation devices the hysteresis must be set smaller than the voltage change after switching of the compensation device.

9.3 Two step residual overvoltage protection ROV2PTOV (59N)

9.3.1 Identification

Function description	IEC 61850 identification	IEC 60617 identification	ANSI/IEEE C37.2 device number
Two step residual overvoltage protection	ROV2PTOV	$3U0$	59N

9.3.2 Application

Two step residual overvoltage protection ROV2PTOV (59N) is primarily used in high impedance grounded distribution networks, mainly as a backup for the primary ground fault protection of the feeders and the transformer. To increase the security for different ground fault related functions, the residual overvoltage signal can be used as a release signal. The residual voltage can be measured either at the transformer neutral or from a voltage transformer open delta connection. The residual voltage can also be calculated internally, based on measurement of the three-phase voltages.

In high impedance grounded systems the residual voltage will increase in case of any fault connected to ground. Depending on the type of fault and fault resistance the residual voltage will reach different values. The highest residual voltage, equal to three times the phase-to-ground voltage, is achieved for a single phase-to-ground fault. The residual voltage increases approximately to the same level in the whole system and does not provide any guidance in finding the faulted component. Therefore, ROV2PTOV (59N) is often used as a backup protection or as a release signal for the feeder ground fault protection.

9.3.3 Setting guidelines

All the voltage conditions in the system where ROV2PTOV (59N) performs its functions should be considered. The same also applies to the associated equipment, its voltage and time characteristic.

There is a very wide application area where general single input or residual overvoltage functions are used. All voltage related settings are made as a percentage of a settable base voltage, which can be set to the primary nominal voltage (phase-phase) level of the power system or the high voltage equipment under consideration.

The time delay for ROV2PTOV (59N) is seldom critical, since residual voltage is related to ground faults in a high impedance grounded system, and enough time must normally be given for the primary protection to clear the fault. In some more specific situations, where the single overvoltage protection is used to protect some specific equipment, the time delay is shorter.

Some applications and related setting guidelines for the residual voltage level are given below.

9.3.3.1 Equipment protection, such as for motors, generators, reactors and transformers

High residual voltage indicates ground fault in the system, perhaps in the component to which Two step residual overvoltage protection (ROV2PTOV, 59N) is connected. For selectivity reasons to the primary protection for the faulted device ROV2PTOV (59N) must trip the component with some time delay. The setting must be above the highest occurring "normal" residual voltage and below the highest acceptable residual voltage for the equipment

9.3.3.2 Equipment protection, capacitors

High voltage will deteriorate the dielectric and the insulation. Two step residual overvoltage protection (ROV2PTOV, 59N) has to be connected to a neutral or open delta winding. The setting must be above the highest occurring "normal" residual voltage and below the highest acceptable residual voltage for the capacitor.

9.3.3.3 Power supply quality

The setting must be above the highest occurring "normal" residual voltage and below the highest acceptable residual voltage, due to regulation, good practice or other agreements.

9.3.3.4 High impedance grounded systems

In high impedance grounded systems, ground faults cause a neutral voltage in the feeding transformer neutral. Two step residual overvoltage protection ROV2PTOV (59N) is used to trip the transformer, as a backup protection for the feeder ground fault protection, and as a backup for the transformer primary ground fault protection. The setting must be above the highest occurring "normal" residual voltage, and below the lowest occurring residual voltage during the faults under consideration. A metallic single-phase ground fault causes a transformer neutral to reach a voltage equal to the nominal phase-to-ground voltage.

The voltage transformers measuring the phase-to-ground voltages measure zero voltage in the faulty phase. The two healthy phases will measure full phase-to-phase voltage, as the faulty phase will be connected to ground. The residual overvoltage will be three times the phase-to-ground voltage. See figure 298.

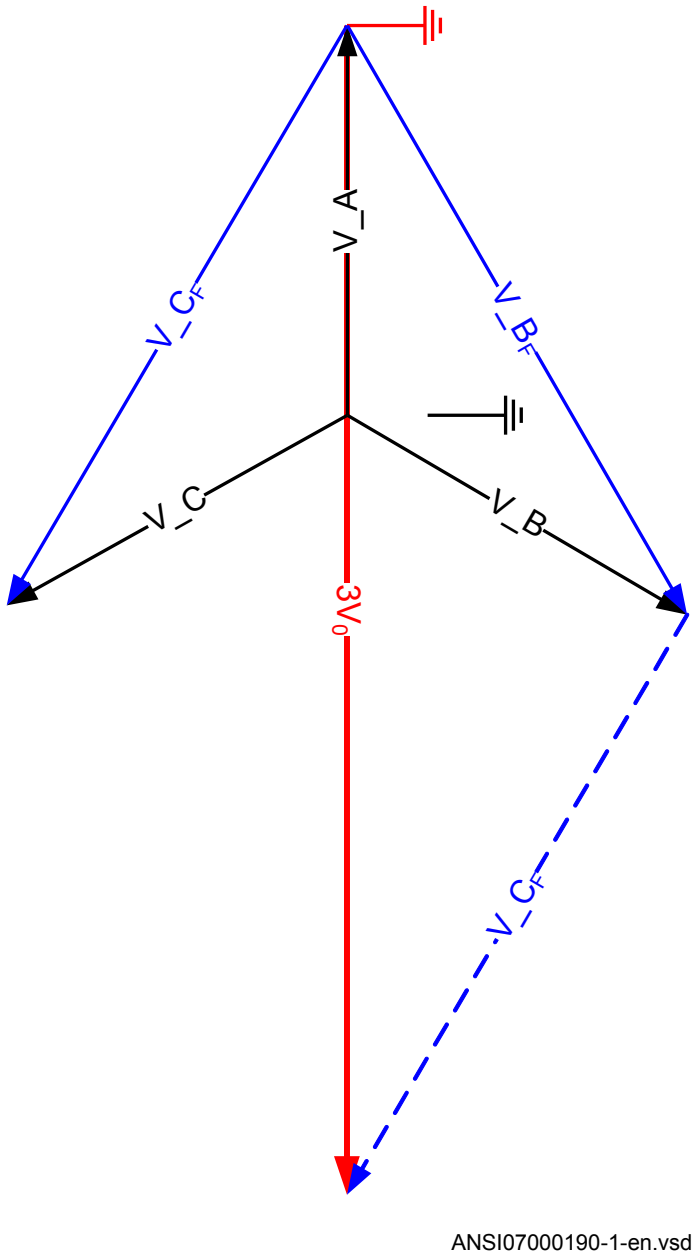

Figure 298: Ground fault in Non-effectively grounded systems

9.3.3.5 Direct grounded system

In direct grounded systems, an ground fault on one phase indicates a voltage collapse in that phase. The two healthy phases will have normal phase-to-ground voltages. The residual sum will have the same value as the remaining phase-to-ground voltage. See figure 299.

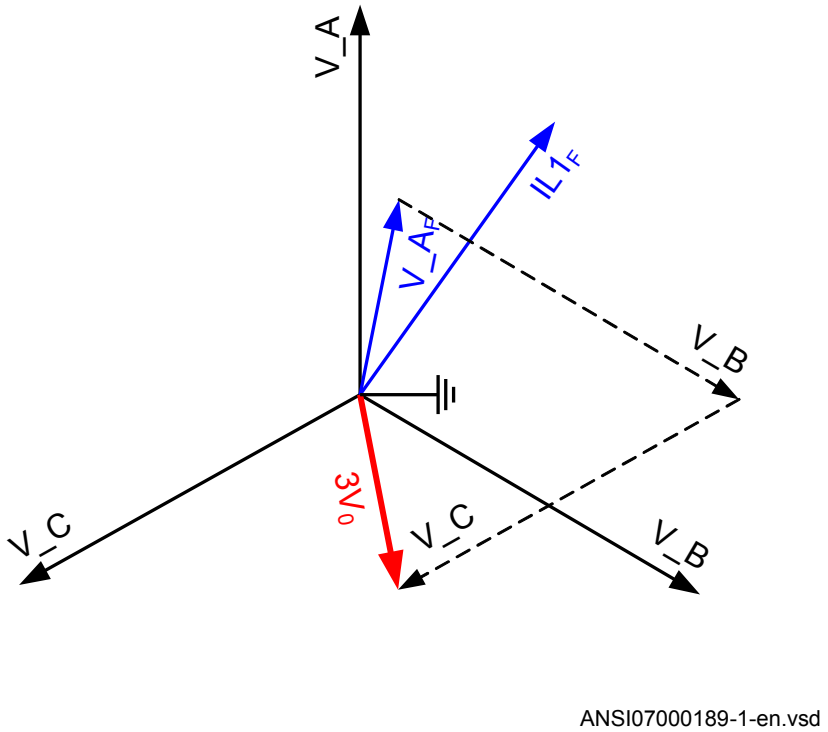

Figure 299: Ground fault in Direct grounded system

9.3.3.6 Settings for Two step residual overvoltage protection

Operation: *Disabled* or *Enabled*

VBase (given in *GlobalBaseSel*) is used as voltage reference for the voltage. The voltage can be fed to the IED in different ways:

1. The IED is fed from a normal voltage transformer group where the residual voltage is calculated internally from the phase-to-ground voltages within the protection. The setting of the analogue input is given as *VBase*=Vph-ph.
2. The IED is fed from a broken delta connection normal voltage transformer group. In an open delta connection the protection is fed by the voltage 3V0 (single input).

The Setting chapter in the application manual explains how the analog input needs to be set.

3. The IED is fed from a single voltage transformer connected to the neutral point of a power transformer in the power system. In this connection the protection is fed by the voltage VN=V0 (single input). The Setting chapter in the application manual explains how the analog input needs to be set. ROV2PTOV (59N) will measure the residual voltage corresponding nominal phase-to-ground voltage for a high impedance grounded system. The measurement will be based on the neutral voltage displacement.

The below described setting parameters are identical for the two steps (*n* = step 1 and 2). Therefore the setting parameters are described only once.

Characteristicn: Selected inverse time characteristic for step *n*. This parameter gives the type of time delay to be used. The setting can be, *Definite time* or *Inverse curve A* or *Inverse curve B* or *Inverse curve C* or *Prog. inv. curve*. The choice is highly dependent of the protection application.

Pickupn: Set operate overvoltage operation value for step *n*, given as % of residual voltage corresponding to *VBase*:

$$V > (\%) \cdot VBase(kV) / \sqrt{3}$$

(Equation 535)

The setting is dependent of the required sensitivity of the protection and the system grounding. In non-effectively grounded systems the residual voltage can be maximum the rated phase-to-ground voltage, which should correspond to 100%.

In effectively grounded systems this value is dependent of the ratio Z0/Z1. The required setting to detect high resistive ground faults must be based on network calculations.

tn: time delay of step *n*, given in s. The setting is highly dependent of the protection application. In many applications, the protection function has the task to prevent damages to the protected object. The speed might be important for example in case of protection of transformer that might be overexcited. The time delay must be co-ordinated with other automated actions in the system.

tResetn: Reset time for step *n* if definite time delay is used, given in s. The default value is 25 ms.

tnMin: Minimum operation time for inverse time characteristic for step *n*, given in s. For very high voltages the overvoltage function, using inverse time characteristic, can give very short operation time. This might lead to unselective trip. By setting *t1Min* longer than the operation time for other protections such unselective tripping can be avoided.

ResetTypeCrvn: Set reset type curve for step *n*. This parameter can be set: *Instantaneous*,*Frozen time*,*Linearly decreased*. The default setting is *Instantaneous*.

tIResetn: Reset time for step *n* if inverse time delay is used, given in s. The default value is 25 ms.

TDn: Time multiplier for inverse time characteristic. This parameter is used for co-ordination between different inverse time delayed undervoltage protections.

ACrvn, *BCrvn*, *CCrvn*, *DCrvn*, *PCrvn*: Parameters for step *n*, to set to create programmable undervoltage inverse time characteristic. Description of this can be found in the technical reference manual.

CrvSatn: Set tuning parameter for step *n*. When the denominator in the expression of the programmable curve is equal to zero the time delay will be infinity. There will be an undesired discontinuity. Therefore, a tuning parameter *CrvSatn* is set to compensate for this phenomenon. In the voltage interval *Pickup*> up to *Pickup*> · (1.0 + *CrvSatn*/100) the used voltage will be: *Pickup*> · (1.0 + *CrvSatn*/100). If the programmable curve is used this parameter must be calculated so that:

$$B \cdot \frac{CrvSatn}{100} - C > 0$$

(Equation 536)

HystAbsn: Absolute hysteresis for step *n*, set in % of *VBase*. The setting of this parameter is highly dependent of the application.

9.4 Overexcitation protection OEXPVPH (24)

9.4.1 Identification

Function description	IEC 61850 identification	IEC 60617 identification	ANSI/IEEE C37.2 device number
Overexcitation protection	OEXPVPH	U/f >	24

9.4.2 Application

When the laminated core of a power transformer is subjected to a magnetic flux density beyond its design limits, stray flux will flow into non-laminated components not

designed to carry flux and cause eddy currents to flow. The eddy currents can cause excessive heating and severe damage to insulation and adjacent parts in a relatively short time.

Overvoltage, or underfrequency, or a combination of both, will result in an excessive flux density level, which is denominated overfluxing or over-excitation.

The greatest risk for overexcitation exists in a thermal power station when the generator-transformer block is disconnected from the rest of the network, or in network “islands” occuring at disturbance where high voltages and/or low frequencies can occur. Overexcitation can occur during start-up and shut-down of the generator if the field current is not properly adjusted. Loss-of load or load-shedding can also result in overexcitation if the voltage control and frequency governor is not functioning properly. Loss of load or load-shedding at a transformer substation can result in overexcitation if the voltage control function is insufficient or out of order. Low frequency in a system isolated from the main network can result in overexcitation if the voltage regulating system maintains normal voltage.

According to the IEC standards, the power transformers shall be capable of delivering rated load current continuously at an applied voltage of 105% of rated value (at rated frequency). For special cases, the purchaser may specify that the transformer shall be capable of operating continuously at an applied voltage 110% of rated value at no load, reduced to 105% at rated secondary load current.

According to ANSI/IEEE standards, the transformers shall be capable of delivering rated load current continuously at an output voltage of 105% of rated value (at rated frequency) and operate continuously with output voltage equal to 110% of rated value at no load.

The capability of a transformer (or generator) to withstand overexcitation can be illustrated in the form of a thermal capability curve, that is, a diagram which shows the permissible time as a function of the level of over-excitation. When the transformer is loaded, the induced voltage and hence the flux density in the core can not be read off directly from the transformer terminal voltage. Normally, the leakage reactance of each separate winding is not known and the flux density in the transformer core can then not be calculated. In two-winding transformers, the low voltage winding is normally located close to the core and the voltage across this winding reflects the flux density in the core. However, depending on the design, the flux flowing in the yoke may be critical for the ability of the transformer to handle excess flux.

The Overexcitation protection (OEXPVPH, 24) has current inputs to allow calculation of the load influence on the induced voltage. This gives a more exact measurement of the magnetizing flow. For power transformers with unidirectional load flow, the voltage to OEXPVPH (24) should therefore be taken from the feeder side.

Heat accumulated in critical parts during a period of overexcitation will be reduced gradually when the excitation returns to the normal value. If a new period of overexcitation occurs after a short time interval, the heating will start from a higher level, therefore, OEXPVPH (24) must have thermal memory. A fixed cooling time constant is settable within a wide range.

The general experience is that the overexcitation characteristics for a number of power transformers are not in accordance with standard inverse time curves. In order to make optimal settings possible, a transformer adapted characteristic is available in the IED. The operate characteristic of the protection function can be set to correspond quite well with any characteristic by setting the operate time for six different figures of overexcitation in the range from 100% to 180% of rated V/Hz.

When configured to a single phase-to-phase voltage input, a corresponding phase-to-phase current is calculated which has the same phase angle relative the phase-to-phase voltage as the phase currents have relative the phase voltages in a symmetrical system. The function should preferably be configured to use a three-phase voltage input if available. It then uses the positive sequence quantities of voltages and currents.

Analog measurements shall not be taken from any winding where a load tap changer is located.

Some different connection alternatives are shown in figure 300.

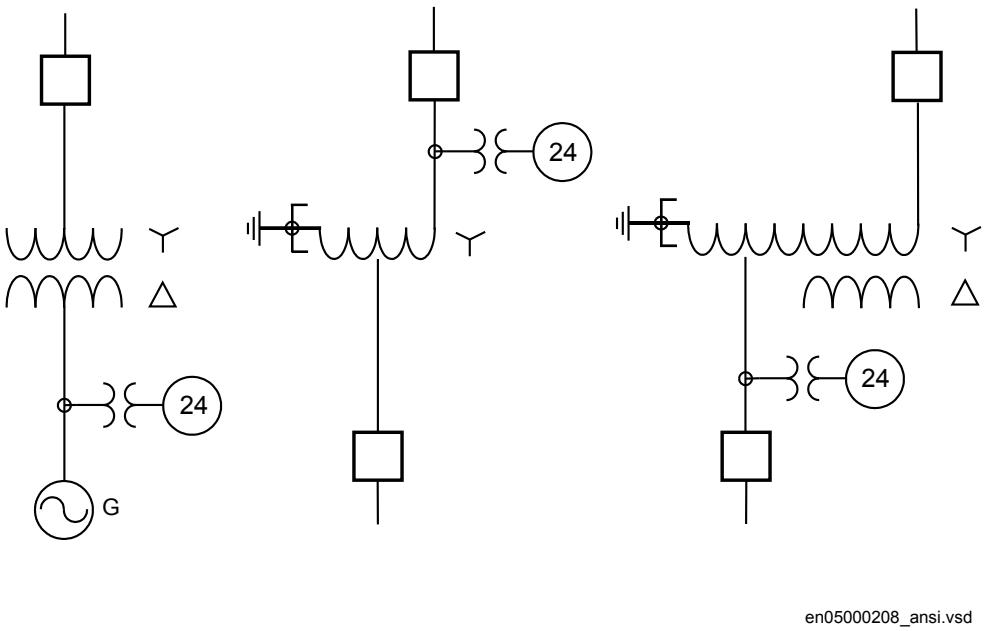

Figure 300: Alternative connections of an Overexcitation protection OEXPVPH (24) (Volt/Hertz)

9.4.3 Setting guidelines

9.4.3.1 Recommendations for input and output signals

Recommendations for Input signals

Please see the default factory configuration.

BLOCK: The input will block the operation of the Overexcitation protection OEXPVPH (24), for example, the block input can be used to block the operation for a limited time during special service conditions.

RESET: OEXPVPH (24) has a thermal memory, which can take a long time to reset. Activation of the RESET input will reset the function instantaneously.

Recommendations for Output signals

Please see the default factory configuration for examples of configuration.

ERROR: The output indicates a measuring error. The reason, for example, can be configuration problems where analogue signals are missing.

BFI: The BFI output indicates that the level Pickup1> has been reached. It can be used to initiate time measurement.

TRIP: The TRIP output is activated after the operate time for the V/f level has expired. TRIP signal is used to trip the circuit breaker(s).

ALARM: The output is activated when the alarm level has been reached and the alarm timer has elapsed. When the system voltage is high this output sends an alarm to the operator.

9.4.3.2 Settings

GlobalBaseSel: Selects the global base value group used by the function to define (*IBase*), (*VBase*) and (*SBase*).

Operation: The operation of the Overexcitation protection OEXPVPH (24) can be set to *Enabled*/*Disabled*.

MeasuredV: The phases involved in the measurement are set here. Normally the three phase measurement measuring the positive sequence voltage should be used but when only individual VT's are used a single phase-to-phase can be used.

MeasuredI: The phases involved in the measurement are set here. *MeasuredI:* must be in accordance with *MeasuredV*.

Pickup1: Operating level for the inverse characteristic, IEEE or tailor made. The operation is based on the relation between rated voltage and rated frequency and set as a percentage factor. Normal setting is around 108-110% depending of the capability curve for the transformer/generator.

Pickup2: Operating level for the *t_MinTripDelay* definite time delay used at high overvoltages. The operation is based on the relation between rated voltage and rated frequency and set as a percentage factor. Normal setting is around 110-180% depending of the capability curve of the transformer/generator. Setting should be above the knee-point when the characteristic starts to be straight on the high side.

XLeakage: The transformer leakage reactance on which the compensation of voltage measurement with load current is based. The setting shall be the transformer leak reactance in primary ohms. If no current compensation is used (mostly the case) the setting is not used.

t_TripPulse: The length of the trip pulse. Normally the final trip pulse is decided by the trip function block. A typical pulse length can be 50 ms.

CurveType: Selection of the curve type for the inverse delay. The IEEE curves or tailor made curve can be selected depending of which one matches the capability curve best.

TDforIEEECurve: The time constant for the inverse characteristic. Select the one giving the best match to the transformer capability.

t_CooolingK: The cooling time constant giving the reset time when voltages drops below the set value. Shall be set above the cooling time constant of the transformer. The default value is recommended to be used if the constant is not known.

t_MinTripDelay: The operating times at voltages higher than the set *Pickup2*. The setting shall match capabilities on these high voltages. Typical setting can be 1-10 second.

t_MaxTripDelay: For overvoltages close to the set value times can be extremely long if a high K time constant is used. A maximum time can then be set to cut the longest times. Typical settings are 1800-3600 seconds (30-60 minutes)

AlarmPickup: Setting of the alarm level in percentage of the set trip level. The alarm level is normally set at around 98% of the trip level.

tAlarm: Setting of the time to alarm is given from when the alarm level has been reached. Typical setting is 5 seconds.

9.4.3.3 Service value report

A number of internal parameters are available as service values for use at commissioning and during service. Remaining time to trip (in seconds) TMTOTRIP,

flux density VPERHZ, internal thermal content in percentage of trip value THERMSTA. The values are available at local HMI, Substation SAsystem and PCM600.

9.4.3.4 Setting example

Sufficient information about the overexcitation capability of the protected object(s) must be available when making the settings. The most complete information is given in an overexcitation capability diagram as shown in figure 301.

The settings *Pickup2* and *Pickup1* are made in per unit of the rated voltage of the transformer winding at rated frequency.

Set the transformer adapted curve for a transformer with overexcitation characteristics in according to figure 301.

Pickup1 for the protection is set equal to the permissible continuous overexcitation according to figure 301 = 105%. When the overexcitation is equal to *Pickup1*, tripping is obtained after a time equal to the setting of t1.

This is the case when *VBase* is equal to the transformer rated voltages. For other values, the percentage settings need to be adjusted accordingly.

When the overexcitation is equal to the set value of *Pickup2*, tripping is obtained after a time equal to the setting of t6. A suitable setting would be *Pickup2* = 140% and t6 = 4 s.

The interval between *Pickup2* and *Pickup1* is automatically divided up in five equal steps, and the time delays t2 to t5 will be allocated to these values of overexcitation. In this example, each step will be (140-105) /5 = 7%. The setting of time delays t1 to t6 are listed in table 40.

Table 40: Settings

V/f op (%)	Timer	Time set (s)
105	t1	7200 (max)
112	t2	600
119	t3	60
126	t4	20
133	t5	8
140	t6	4

Information on the cooling time constant T_{cool} should be retrieved from the power transformer manufacturer.

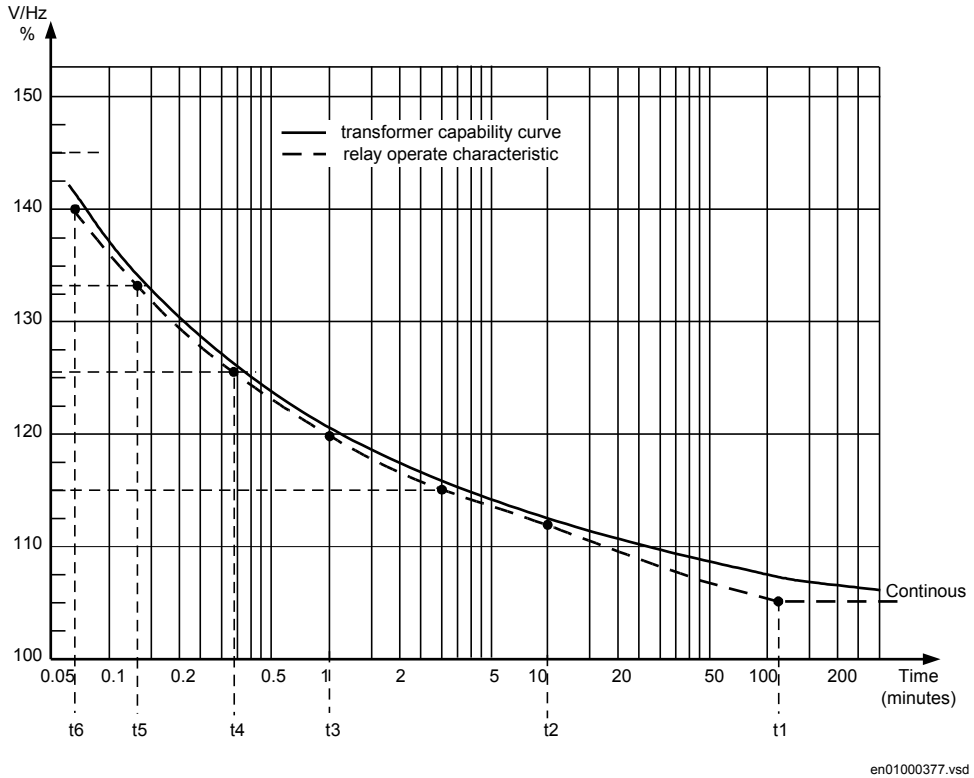

Figure 301: Example on overexcitation capability curve and V/Hz protection settings for power transformer

9.5 Voltage differential protection VDCPTOV (60)

9.5.1 Identification

Function description	IEC 61850 identification	IEC 60617 identification	ANSI/IEEE C37.2 device number
Voltage differential protection	VDCPTOV	-	60

9.5.2 Application

The Voltage differential protection VDCPTOV (60) functions can be used in some different applications.

- Voltage unbalance protection for capacitor banks. The voltage on the bus is supervised with the voltage in the capacitor bank, phase- by phase. Difference

indicates a fault, either short-circuited or open element in the capacitor bank. It is mainly used on elements with external fuses but can also be used on elements with internal fuses instead of a current unbalance protection measuring the current between the neutrals of two half's of the capacitor bank. The function requires voltage transformers in all phases of the capacitor bank. Figure 302 shows some different alternative connections of this function.

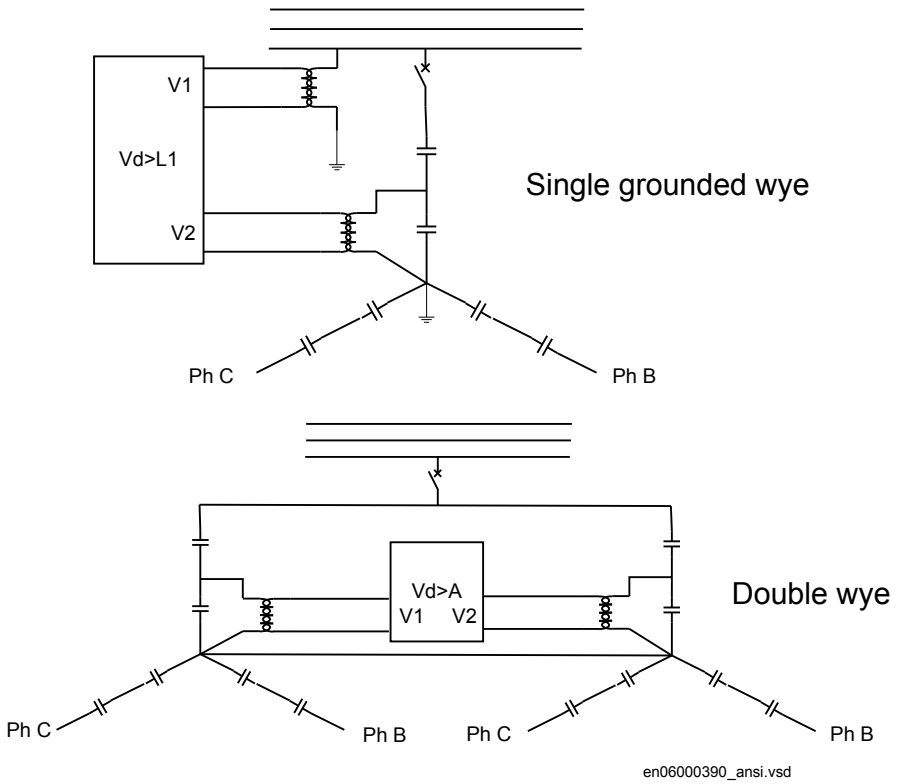

Figure 302: Connection of voltage differential protection VDCPTOV (60) function to detect unbalance in capacitor banks (one phase only is shown)

VDCPTOV (60) function has a block input (BLOCK) where a fuse failure supervision (or MCB tripped) can be connected to prevent problems if one fuse in the capacitor bank voltage transformer set has opened and not the other (capacitor voltage is connected to input V2). It will also ensure that a fuse failure alarm is given instead of a Undervoltage or Differential voltage alarm and/or tripping.

Fuse failure supervision (SDDRFUF) function for voltage transformers. In many application the voltages of two fuse groups of the same voltage transformer or fuse groups of two separate voltage transformers measuring the same voltage can be supervised with this function. It will be an alternative for example, generator units where often two voltage transformers are supplied for measurement and excitation equipment.

The application to supervise the voltage on two voltage transformers in the generator circuit is shown in figure 303.

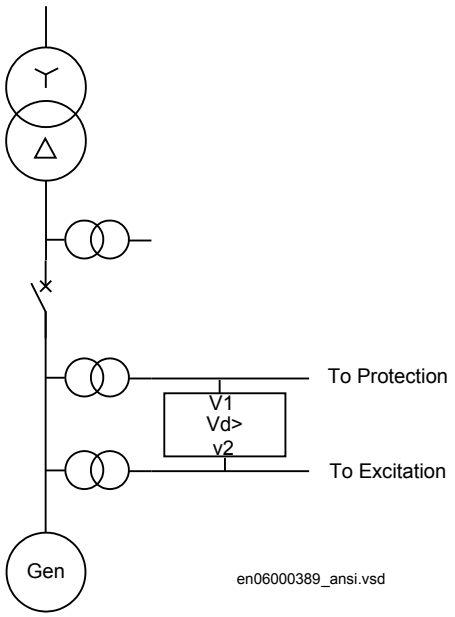

Figure 303: Supervision of fuses on generator circuit voltage transformers

9.5.3 Setting guidelines

The parameters for the voltage differential function are set via the local HMI or PCM600.

The following settings are done for the voltage differential function.

Operation: *Off/On*

GlobalBaseSel: Selects the global base value group used by the function to define (*IBase*), (*VBase*) and (*SBase*).

BlkDiffAtVLow: The setting is to block the function when the voltages in the phases are low.

RFLx: Is the setting of the voltage ratio compensation factor where possible differences between the voltages is compensated for. The differences can be due to different voltage transformer ratios, different voltage levels e.g. the voltage measurement inside the capacitor bank can have a different voltage level but the difference can also e.g. be used by voltage drop in the secondary circuits. The setting is normally done at site by evaluating the differential voltage achieved as a service value for each phase. The

factor is defined as V2 · *RFLx* and shall be equal to the V1 voltage. Each phase has its own ratio factor.

VDTrip: The voltage differential level required for tripping is set with this parameter. For application on capacitor banks the setting will depend of the capacitor bank voltage and the number of elements per phase in series and parallel. Capacitor banks must be tripped before excessive voltage occurs on the healthy capacitor elements. The setting values required are normally given by the capacitor bank supplier. For other applications it has to be decided case by case. For fuse supervision normally only the alarm level is used.

tTrip: The time delay for tripping is set by this parameter. Normally, the delay does not need to be so short in capacitor bank applications as there is no fault requiring urgent tripping.

tReset: The time delay for reset of tripping level element is set by this parameter. Normally, it can be set to a short delay as faults are permanent when they occur.

For the advanced users following parameters are also available for setting. Default values are here expected to be acceptable.

V1Low: The setting of the undervoltage level for the first voltage input is decided by this parameter. The proposed default setting is 70%.

V2Low: The setting of the undervoltage level for the second voltage input is decided by this parameter. The proposed default setting is 70%.

tBlock: The time delay for blocking of the function at detected undervoltages is set by this parameter.

VDAlarm: The voltage differential level required for alarm is set with this parameter. For application on capacitor banks the setting will depend of the capacitor bank voltage and the number of elements per phase in series and parallel. Normally values required are given by capacitor bank supplier.

For fuse supervision normally only this alarm level is used and a suitable voltage level is 3-5% if the ratio correction factor has been properly evaluated during commissioning.

For other applications it has to be decided case by case.

tAlarm: The time delay for alarm is set by this parameter. Normally, few seconds delay can be used on capacitor banks alarm. For fuse failure supervision (SDDRFUF) the alarm delay can be set to zero.

9.6 Loss of voltage check LOVPTUV (27)

9.6.1 Identification

Function description	IEC 61850 identification	IEC 60617 identification	ANSI/IEEE C37.2 device number
Loss of voltage check	LOVPTUV	-	27

9.6.2 Application

The trip of the circuit breaker at a prolonged loss of voltage at all the three phases is normally used in automatic restoration systems to facilitate the system restoration after a major blackout. Loss of voltage check (LOVPTUV, 27) generates a TRIP signal only if the voltage in all the three phases is low for more than the set time. If the trip to the circuit breaker is not required, LOVPTUV (27) is used for signallization only through an output contact or through the event recording function.

9.6.3 Setting guidelines

Loss of voltage check (LOVPTUV, 27) is in principle independent of the protection functions. It requires to be set to open the circuit breaker in order to allow a simple system restoration following a main voltage loss of a big part of the network and only when the voltage is lost with breakers still closed.

All settings are in primary values or per unit. Set *VBase* to rated voltage of the system or the voltage transformer primary rated voltage. Set operating level per phase *VPG* to typically 70% of rated *VBase* level. Set the time delay *tTrip*=5-20 seconds.

9.6.3.1 Advanced users settings

For advanced users the following parameters need also to be set. Set the length of the trip pulse to typical *tPulse*=0.15 sec. Set the blocking time *tBlock* to block Loss of voltage check (LOVPTUV, 27), if some but not all voltage are low, to typical 5.0 seconds and set the time delay for enabling the function after restoration *tRestore* to 3 - 40 seconds.

9.7 Radial feeder protection PAPGAPC (27)

9.7.1 Identification

Function description	IEC 61850 identification	IEC 60617 identification	ANSI/IEEE C37.2 device number
Radial feeder protection	PAPGAPC	U<	27

9.7.2 Application

The most common application of the PAPGAPC (27) function is to provide tripping at the remote end of lines with passive load or with weak end infeed. The function must be included in the terminal at the weak infeed end of the feeder.

Permissive communication schemes can basically operate only when the protection at the remote end of a feeder can detect the fault. The detection requires a minimum of fault current, normally >20% of *Ir*.

The fault current can be low due to absence of generated power or low short circuit current of the source. The fault current can initially be too low due to the fault current distribution.

In this case, the fault current increases when the breaker opens at the strong line end and a sequential tripping is achieved.

The detection of the fault by an independent tripping zone 1 is then required.

To avoid sequential tripping as described or when zone 1 is not available, the protection terminal must be provided with this application function.

9.7.3 Setting guidelines

The parameters for PAPGAPC (27) application function are set via the local HMI or Protection and Control Manager PCM600.

Operation: The function can be set *Enabled*/*Disabled*.

GlobalBaseSel: Used to select a GBASVAL function for reference of base values, primary current (*IBase*), primary voltage (*VBase*) and primary power (*SBase*).

: Faulted phase voltage in % of quadrature phase – phase voltage divided by sqrt (3).*VPhSel*<: Faulted phase voltage in % of quadrature phase – phase voltage divided by sqrt (3).

Tau: Time constant for reference voltage.

FastOperation: Enabling of fast fault clearing.

t3Ph: Time delay for three phase operation.

Pickup_N: Residual current detection in % of *IBase*.

ResCurrCheck: Enabling of residual current check for delayed operation at single phase faults.

Del1PhOp: Enabling of delayed single phase operation.

t1Ph: Time delay for single phase operation.

Del3PhOp: Enabling of delayed three phase operation.

ResCurrOper: Enabling of residual current operation.

tResCurr: Time delay for residual current indication.

Section 10 Frequency protection

10.1 Underfrequency protection SAPTUF (81)

10.1.1 Identification

Function description	IEC 61850 identification	IEC 60617 identification	ANSI/IEEE C37.2 device number
Underfrequency protection	SAPTUF	*f* <	81

10.1.2 Application

Underfrequency protection SAPTUF (81) is applicable in all situations, where reliable detection of low fundamental power system frequency is needed. The power system frequency, and the rate of change of frequency, is a measure of the unbalance between the actual generation and the load demand. Low fundamental frequency in a power system indicates that the available generation is too low to fully supply the power demanded by the load connected to the power grid. SAPTUF (81) detects such situations and provides an output signal, suitable for load shedding, generator boosting, HVDC-set-point change, gas turbine start up and so on. Sometimes shunt reactors are automatically switched in due to low frequency, in order to reduce the power system voltage and hence also reduce the voltage dependent part of the load.

SAPTUF (81) is very sensitive and accurate and is used to alert operators that frequency has slightly deviated from the set-point, and that manual actions might be enough. The underfrequency signal is also used for overexcitation detection. This is especially important for generator step-up transformers, which might be connected to the generator but disconnected from the grid, during a roll-out sequence. If the generator is still energized, the system will experience overexcitation, due to the low frequency.

10.1.3 Setting guidelines

All the frequency and voltage magnitude conditions in the system where SAPTUF (81) performs its functions should be considered. The same also applies to the associated equipment, its frequency and time characteristic.

There are especially two specific application areas for SAPTUF (81):

1. to protect equipment against damage due to low frequency, such as generators, transformers, and motors. Overexcitation is also related to low frequency
2. to protect a power system, or a part of a power system, against breakdown, by shedding load, in generation deficit situations.

The underfrequency PICKUP value is set in Hz. All voltage magnitude related settings are made as a percentage of a settable base voltage, which normally is set to the nominal primary voltage level (phase-phase) of the power system or the high voltage equipment under consideration.

Some applications and related setting guidelines for the frequency level are given below:

Equipment protection, such as for motors and generators

The setting has to be well below the lowest occurring "normal" frequency and well above the lowest acceptable frequency for the equipment.

Power system protection, by load shedding

The setting has to be below the lowest occurring "normal" frequency and well above the lowest acceptable frequency for power stations, or sensitive loads. The setting level, the number of levels and the distance between two levels (in time and/or in frequency) depends very much on the characteristics of the power system under consideration. The size of the "largest loss of production" compared to "the size of the power system" is a critical parameter. In large systems, the load shedding can be set at a fairly high frequency level, and the time delay is normally not critical. In smaller systems the frequency PICKUP level has to be set at a lower value, and the time delay must be rather short.

The voltage related time delay is used for load shedding. The settings of SAPTUF (81) could be the same all over the power system. The load shedding is then performed firstly in areas with low voltage magnitude, which normally are the most problematic areas, where the load shedding also is most efficient.

10.1.3.1 Equipment protection, such as for motors and generators

The setting has to be well below the lowest occurring "normal" frequency and well above the lowest acceptable frequency for the equipment.

10.1.3.2 Power system protection, by load shedding

The setting has to be well below the lowest occurring "normal" frequency and well above the lowest acceptable frequency for power stations, or sensitive loads. The setting level, the number of levels and the distance between two levels (in time and/or in frequency) depends very much on the characteristics of the power system under consideration. The size of the "largest loss of production" compared to "the size of the power system" is a critical parameter. In large systems, the load shedding can be set at a fairly high frequency level, and the time delay is normally not critical. In smaller systems the frequency pickup level has to be set at a lower value, and the time delay must be rather short.

The voltage related time delay is used for load shedding. The settings of the underfrequency function could be the same all over the power system. The load shedding is then performed firstly in areas with low voltage magnitude, which normally are the most problematic areas, where the load shedding also is most efficient.

10.2 Overfrequency protection SAPTOF (81)

10.2.1 Identification

Function description	IEC 61850 identification	IEC 60617 identification	ANSI/IEEE C37.2 device number
Overfrequency protection	SAPTOF	*f* >	81

10.2.2 Application

Overfrequency protection function SAPTOF (81) is applicable in all situations, where reliable detection of high fundamental power system frequency is needed. The power system frequency, and rate of change of frequency, is a measure of the unbalance between the actual generation and the load demand. High fundamental frequency in a power system indicates that the available generation is too large compared to the power demanded by the load connected to the power grid. SAPTOF (81) detects such situations and provides an output signal, suitable for generator shedding, HVDC-set-point change and so on. SAPTOF (81) is very sensitive and accurate and can also be used to alert operators that frequency has slightly deviated from the set-point, and that manual actions might be enough.

10.2.3 Setting guidelines

All the frequency and voltage magnitude conditions in the system where SAPTOF (81) performs its functions must be considered. The same also applies to the associated equipment, its frequency and time characteristic.

There are especially two application areas for SAPTOF (81):

1. to protect equipment against damage due to high frequency, such as generators, and motors
2. to protect a power system, or a part of a power system, against breakdown, by shedding generation, in over production situations.

The overfrequency PICKUP value is set in Hz. All voltage magnitude related settings are made as a percentage of a settable base voltage, which normally is set to the nominal voltage level (phase-to-phase) of the power system or the high voltage equipment under consideration.

Some applications and related setting guidelines for the frequency level are given below:

Equipment protection, such as for motors and generators

The setting has to be well above the highest occurring "normal" frequency and well below the highest acceptable frequency for the equipment.

Power system protection, by generator shedding

The setting must be above the highest occurring "normal" frequency and below the highest acceptable frequency for power stations, or sensitive loads. The setting level, the number of levels and the distance between two levels (in time and/or in frequency) depend very much on the characteristics of the power system under consideration. The size of the "largest loss of load" compared to "the size of the power system" is a critical parameter. In large systems, the generator shedding can be set at a fairly low frequency level, and the time delay is normally not critical. In smaller systems the frequency PICKUP level has to be set at a higher value, and the time delay must be rather short.

10.2.3.1 Equipment protection, such as for motors and generators

The setting has to be well above the highest occurring "normal" frequency and well below the highest acceptable frequency for the equipment.

10.2.3.2 Power system protection, by generator shedding

The setting level, the number of levels and the distance between two levels (in time and/or in frequency) depend very much on the characteristics of the power system under consideration. The size of the "largest loss of load" compared to "the size of the power

system" is a critical parameter. In large systems, the generator shedding can be set at a fairly low frequency level, and the time delay is normally not critical. In smaller systems the frequency pickup level has to be set at a higher value, and the time delay must be rather short.

10.3 Rate-of-change frequency protection SAPFRC (81)

10.3.1 Identification

Function description	IEC 61850 identification	IEC 60617 identification	ANSI/IEEE C37.2 device number
Rate-of-change frequency protection	SAPFRC	$df/dt \gtrless$	81

10.3.2 Application

Rate-of-change frequency protection (SAPFRC, 81), is applicable in all situations, where reliable detection of change of the fundamental power system voltage frequency is needed. SAPFRC (81) can be used both for increasing frequency and for decreasing frequency. SAPFRC (81) provides an output signal, suitable for load shedding or generator shedding, generator boosting, HVDC-set-point change, gas turbine start up and so on. Very often SAPFRC (81) is used in combination with a low frequency signal, especially in smaller power systems, where loss of a fairly large generator will require quick remedial actions to secure the power system integrity. In such situations load shedding actions are required at a rather high frequency level, but in combination with a large negative rate-of-change of frequency the underfrequency protection can be used at a rather high setting.

10.3.3 Setting guidelines

The parameters for Rate-of-change frequency protection SAPFRC (81) are set via the local HMI or PCM600.

All the frequency and voltage magnitude conditions in the system where SAPFRC (81) performs its functions should be considered. The same also applies to the associated equipment, its frequency and time characteristic.

There are especially two application areas for SAPFRC (81):

1. to protect equipment against damage due to high or too low frequency, such as generators, transformers, and motors
2. to protect a power system, or a part of a power system, against breakdown by shedding load or generation, in situations where load and generation are not in balance.

SAPFRC (81) is normally used together with an overfrequency or underfrequency function, in small power systems, where a single event can cause a large imbalance between load and generation. In such situations load or generation shedding has to take place very quickly, and there might not be enough time to wait until the frequency signal has reached an abnormal value. Actions are therefore taken at a frequency level closer to the primary nominal level, if the rate-of-change frequency is large (with respect to sign).

SAPFRC (81)PICKUP value is set in Hz/s. All voltage magnitude related settings are made as a percentage of a settable base voltage, which normally is set to the primary nominal voltage level (phase-phase) of the power system or the high voltage equipment under consideration.

SAPFRC (81) is not instantaneous, since the function needs some time to supply a stable value. It is recommended to have a time delay long enough to take care of signal noise. However, the time, rate-of-change frequency and frequency steps between different actions might be critical, and sometimes a rather short operation time is required, for example, down to 70 ms.

Smaller industrial systems might experience rate-of-change frequency as large as 5 Hz/s, due to a single event. Even large power systems may form small islands with a large imbalance between load and generation, when severe faults (or combinations of faults) are cleared - up to 3 Hz/s has been experienced when a small island was isolated from a large system. For more "normal" severe disturbances in large power systems, rate-of-change of frequency is much less, most often just a fraction of 1.0 Hz/s.

Section 11 Multipurpose protection

11.1 General current and voltage protection CVGAPC

11.1.1 Identification

Function description	IEC 61850 identification	IEC 60617 identification	ANSI/IEEE C37.2 device number
General current and voltage protection	CVGAPC	2(I>/U<)	-

11.1.2 Application

A breakdown of the insulation between phase conductors or a phase conductor and ground results in a short circuit or a ground fault respectively. Such faults can result in large fault currents and may cause severe damage to the power system primary equipment. Depending on the magnitude and type of the fault different overcurrent protections, based on measurement of phase, ground or sequence current components can be used to clear these faults. Additionally it is sometimes required that these overcurrent protections shall be directional and/or voltage controlled/restrained.

The over/under voltage protection is applied on power system elements, such as generators, transformers, motors and power lines in order to detect abnormal voltage conditions. Depending on the type of voltage deviation and type of power system abnormal condition different over/under voltage protections based on measurement of phase-to-ground, phase-to-phase, residual- or sequence- voltage components can be used to detect and operate for such incident.

The IED can be provided with multiple General current and voltage protection (CVGAPC) protection modules. The function is always connected to three-phase current and three-phase voltage input in the configuration tool, but it will always measure only one current and one voltage quantity selected by the end user in the setting tool.

Each CVGAPC function module has got four independent protection elements built into it.

1. Two overcurrent steps with the following built-in features:

- Definite time delay or Inverse Time Overcurrent TOC/IDMT delay for both steps
- Second harmonic supervision is available in order to only allow operation of the overcurrent stage(s) if the content of the second harmonic in the measured current is lower than pre-set level
- Directional supervision is available in order to only allow operation of the overcurrent stage(s) if the fault location is in the pre-set direction (*Forward* or *Reverse*). Its behavior during low-level polarizing voltage is settable (*Non-Directional*,*Block*,*Memory*)
- Voltage restrained/controlled feature is available in order to modify the pick-up level of the overcurrent stage(s) in proportion to the magnitude of the measured voltage
- Current restrained feature is available in order to only allow operation of the overcurrent stage(s) if the measured current quantity is bigger than the set percentage of the current restrain quantity.

2. Two undercurrent steps with the following built-in features:
   - Definite time delay for both steps
3. Two overvoltage steps with the following built-in features
   - Definite time delay or Inverse Time Overcurrent TOC/IDMT delay for both steps
4. Two undervoltage steps with the following built-in features
   - Definite time delay or Inverse Time Overcurrent TOC/IDMT delay for both steps

All these four protection elements within one general protection function works independently from each other and they can be individually enabled or disabled. However it shall be once more noted that all these four protection elements measure one selected current quantity and one selected voltage quantity (see table 41 and table 42). It is possible to simultaneously use all four-protection elements and their individual stages. Sometimes in order to obtain desired application functionality it is necessary to provide interaction between two or more protection elements/stages within one CVGAPC function by appropriate IED configuration (for example, dead machine protection for generators).

11.1.2.1 Current and voltage selection for CVGAPC function

CVGAPC function is always connected to three-phase current and three-phase voltage input in the configuration tool, but it will always measure only the single current and the single voltage quantity selected by the end user in the setting tool (selected current quantity and selected voltage quantity).

The user can select, by a setting parameter *CurrentInput*, to measure one of the following current quantities shown in table 41.

Table 41: Available selection for current quantity within CVGAPC function

	Set value for parameter "CurrentInput"	Comment
1	*PhaseA*	CVGAPC function will measure the phase A current phasor
2	*PhaseB*	CVGAPC function will measure the phase B current phasor
3	*PhaseC*	CVGAPC function will measure the phase C current phasor
4	*PosSeq*	CVGAPC function will measure internally calculated positive sequence current phasor
5	*NegSeq*	CVGAPC function will measure internally calculated negative sequence current phasor
6	*3 · ZeroSeq*	CVGAPC function will measure internally calculated zero sequence current phasor multiplied by factor 3
7	*MaxPh*	CVGAPC function will measure current phasor of the phase with maximum magnitude
8	*MinPh*	CVGAPC function will measure current phasor of the phase with minimum magnitude
9	*UnbalancePh*	CVGAPC function will measure magnitude of unbalance current, which is internally calculated as the algebraic magnitude difference between the current phasor of the phase with maximum magnitude and current phasor of the phase with minimum magnitude. Phase angle will be set to 0° all the time
10	*PhaseA-PhaseB*	CVGAPC function will measure the current phasor internally calculated as the vector difference between the phase A current phasor and phase B current phasor (VA-VB)
11	*PhaseB-PhaseC*	CVGAPC function will measure the current phasor internally calculated as the vector difference between the phase B current phasor and phase C current phasor (VB-VC)
12	*PhaseC-PhaseA*	CVGAPC function will measure the current phasor internally calculated as the vector difference between the phase C current phasor and phase A current phasor (VC-VA)
13	*MaxPh-Ph*	CVGAPC function will measure ph-ph current phasor with the maximum magnitude
14	*MinPh-Ph*	CVGAPC function will measure ph-ph current phasor with the minimum magnitude
15	*UnbalancePh-Ph*	CVGAPC function will measure magnitude of unbalance current, which is internally calculated as the algebraic magnitude difference between the ph-ph current phasor with maximum magnitude and ph-ph current phasor with minimum magnitude. Phase angle will be set to 0° all the time

The user can select, by a setting parameter *VoltageInput*, to measure one of the following voltage quantities shown in table 42.

Table 42: Available selection for voltage quantity within CVGAPC function

	Set value for parameter "VoltageInput"	Comment
1	*PhaseA*	CVGAPC function will measure the phase A voltage phasor
2	*PhaseB*	CVGAPC function will measure the phase B voltage phasor
3	*PhaseC*	CVGAPC function will measure the phase C voltage phasor
4	*PosSeq*	CVGAPC function will measure internally calculated positive sequence voltage phasor
5	*-NegSeq*	CVGAPC function will measure internally calculated negative sequence voltage phasor. This voltage phasor will be intentionally rotated for 180° in order to enable easier settings for the directional feature when used.
6	*-3*ZeroSeq*	CVGAPC function will measure internally calculated zero sequence voltage phasor multiplied by factor 3. This voltage phasor will be intentionally rotated for 180° in order to enable easier settings for the directional feature when used.
7	*MaxPh*	CVGAPC function will measure voltage phasor of the phase with maximum magnitude
8	*MinPh*	CVGAPC function will measure voltage phasor of the phase with minimum magnitude
9	*UnbalancePh*	CVGAPC function will measure magnitude of unbalance voltage, which is internally calculated as the algebraic magnitude difference between the voltage phasor of the phase with maximum magnitude and voltage phasor of the phase with minimum magnitude. Phase angle will be set to 0° all the time
10	*PhaseA-PhaseB*	CVGAPC function will measure the voltage phasor internally calculated as the vector difference between the phase A voltage phasor and phase B voltage phasor (VA-VB)
11	*PhaseB-PhaseC*	CVGAPC function will measure the voltage phasor internally calculated as the vector difference between the phase B voltage phasor and phase C voltage phasor (VB-VC)
12	*PhaseC-PhaseC*	CVGAPC function will measure the voltage phasor internally calculated as the vector difference between the phase C voltage phasor and phase A voltage phasor (VC-VA)
13	*MaxPh-Ph*	CVGAPC function will measure ph-ph voltage phasor with the maximum magnitude
14	*MinPh-Ph*	CVGAPC function will measure ph-ph voltage phasor with the minimum magnitude
15	*UnbalancePh-Ph*	CVGAPC function will measure magnitude of unbalance voltage, which is internally calculated as the algebraic magnitude difference between the ph-ph voltage phasor with maximum magnitude and ph-ph voltage phasor with minimum magnitude. Phase angle will be set to 0° all the time

It is important to notice that the voltage selection from table 42 is always applicable regardless the actual external VT connections. The three-phase VT inputs can be connected to IED as either three phase-to-groundvoltages VA, VB and VC or three phase-

to-phase voltages VAB, VBC and VCA. This information about actual VT connection is entered as a setting parameter for the pre-processing block, which will then take automatically care about it.

11.1.2.2 Base quantities for CVGAPC function

The parameter settings for the base quantities, which represent the base (100%) for pickup levels of all measuring stages shall be entered as setting parameters for every CVGAPC function.

Base current shall be entered as:

1. rated phase current of the protected object in primary amperes, when the measured Current Quantity is selected from 1 to 9, as shown in table 41.
2. rated phase current of the protected object in primary amperes multiplied by √3 (1.732 x Iphase), when the measured Current Quantity is selected from 10 to 15, as shown in table 41.

Base voltage shall be entered as:

1. rated phase-to-ground voltage of the protected object in primary kV, when the measured Voltage Quantity is selected from 1 to 9, as shown in table 42.
2. rated phase-to-phase voltage of the protected object in primary kV, when the measured Voltage Quantity is selected from 10 to 15, as shown in table 42.

11.1.2.3 Application possibilities

Due to its flexibility the general current and voltage protection (CVGAPC) function can be used, with appropriate settings and configuration in many different applications. Some of possible examples are given below:

1. Transformer and line applications:
   - Underimpedance protection (circular, non-directional characteristic) (21)
   - Underimpedance protection (circular mho characteristic) (21)
   - Voltage Controlled/Restrained Overcurrent protection (51C, 51V)
   - Phase or Negative/Positive/Zero Sequence (Non-Directional or Directional) Overcurrent protection (50, 51, 46, 67, 67N, 67Q)
   - Phase or phase-to-phase or Negative/Positive/Zero Sequence over/under voltage protection (27, 59, 47)
   - Special thermal overload protection (49)
   - Open Phase protection
   - Unbalance protection
2. Generator protection

- 80-95% Stator earth fault protection (measured or calculated 3Vo) (59GN)
- Rotor earth fault protection (with external COMBIFLEX RXTTE4 injection unit) (64F)
- Underimpedance protection (21)
- Voltage Controlled/Restrained Overcurrent protection (51C, 51V)
- Turn-to-Turn & Differential Backup protection (directional Negative Sequence. Overcurrent protection connected to generator HV terminal CTs looking into generator) (67Q)
- Stator Overload protection (49S)
- Rotor Overload protection (49R)
- Loss of Excitation protection (directional pos. seq. OC protection) (40)
- Reverse power/Low forward power protection (directional pos. seq. OC protection, 2% sensitivity) (32)
- Dead-Machine/Inadvertent-Energizing protection (51/27)
- Breaker head flashover protection
- Improper synchronizing detection
- Sensitive negative sequence generator over current protection and alarm (46)
- Phase or phase-to-phase or Negative/Positive/Zero Sequence over/under voltage protection (27x, 59x, 47)
- Generator out-of-step detection (based on directional pos. seq. OC) (78)
- Inadvertent generator energizing

11.1.2.4 Inadvertent generator energization

When the generator is taken out of service, and stand-still, there is a risk that the generator circuit breaker is closed by mistake.

Three-phase energizing of a generator, which is at standstill or on turning gear, causes it to behave and accelerate similarly to an induction motor. The machine, at this point, essentially represents the subtransient reactance to the system and it can be expected to draw from one to four per unit current, depending on the equivalent system impedance. Machine terminal voltage can range from 20% to 70% of rated voltage, again, depending on the system equivalent impedance (including the block transformer). Higher quantities of machine current and voltage (3 to 4 per unit current and 50% to 70% rated voltage) can be expected if the generator is connected to a strong system. Lower current and voltage values (1 to 2 per unit current and 20% to 40% rated voltage) are representative of weaker systems.

Since a generator behaves similarly to an induction motor, high currents will develop in the rotor during the period it is accelerating. Although the rotor may be thermally damaged from excessive high currents, the time to damage will be on the order of a few seconds. Of more critical concern, however, is the bearing, which can be damaged in a fraction of a second due to low oil pressure. Therefore, it is essential that high speed tripping is provided. This tripping should be almost instantaneous (< 100 ms).

There is a risk that the current into the generator at inadvertent energization will be limited so that the “normal” overcurrent or underimpedance protection will not detect the dangerous situation. The delay of these protection functions might be too long. The reverse power protection might detect the situation but the operation time of this protection is normally too long.

For big and important machines, fast protection against inadvertent energizing should, therefore, be included in the protective scheme.

The protection against inadvertent energization can be made by a combination of undervoltage, overvoltage and overcurrent protection functions. The undervoltage function will, with a delay for example 10 s, detect the situation when the generator is not connected to the grid (standstill) and activate the overcurrent function. The overvoltage function will detect the situation when the generator is taken into operation and will disable the overcurrent function. The overcurrent function will have a pick-up value about 50% of the rated current of the generator. The trip delay will be about 50 ms.

11.1.3 Setting guidelines

When inverse time overcurrent characteristic is selected, the operate time of the stage will be the sum of the inverse time delay and the set definite time delay. Thus, if only the inverse time delay is required, it is of utmost importance to set the definite time delay for that stage to zero.

The parameters for the general current and voltage protection function (CVGAPC) are set via the local HMI or Protection and Control Manager (PCM600).

The overcurrent steps has a *IMinx* (*x*=1 or 2 depending on step) setting to set the minimumpickup current. Set *IMinx* below *PickupCurr_OCx* for every step to achieve ANSI reset characteristic according to standard. If *IMinx* is set above *PickupCurr_OCx* for any step the ANSI reset works as if current is zero when current drops below *IMinx*.

11.1.3.1 Directional negative sequence overcurrent protection

Directional negative sequence overcurrent protection is typically used as sensitive ground-fault protection of power lines where incorrect zero sequence polarization may result from mutual induction between two or more parallel lines. Additionally, it can be used in applications on underground cables where zero-sequence impedance depends on the fault current return paths, but the cable negative-sequence impedance is practically constant. It shall be noted that directional negative sequence OC element offers protection against all unbalance faults (phase-to-phase faults as well). Care shall

be taken that the minimum pickup of such protection function shall be set above natural system unbalance level.

An example will be given, how sensitive-ground-fault protection for power lines can be achieved by using negative-sequence directional overcurrent protection elements within a CVGAPC function.

This functionality can be achieved by using one CVGAPC function. The following shall be done to ensure proper operation of the function:

1. Connect three-phase power line currents and three-phase power line voltages to one CVGAPC instance (for example, GF04)
2. Set *CurrentInput* to *NegSeq* (please note that CVGAPC function measures I2 current and NOT 3I2 current; this is essential for proper OC pickup level setting)
3. Set *VoltageInput* to -*NegSeq* (please note that the negative sequence voltage phasor is intentionally inverted in order to simplify directionality
4. Set base current *IBase* value equal to the rated primary current of power line CTs
5. Set base voltage *UBase* value equal to the rated power line phase-to-phase voltage in kV
6. Set *RCADir* to value +65 degrees (*NegSeq* current typically lags the inverted *NegSeq* voltage for this angle during the fault)
7. Set *ROADir* to value 90 degree
8. Set *LowVolt_VM* to value 2% (*NegSeq* voltage level above which the directional element will be enabled)
9. Enable one overcurrent stage (for example, OC1)
10. By parameter *CurveType_OC1* select appropriate TOC/IDMT or definite time delayed curve in accordance with your network protection philosophy
11. Set *PickupCurr_OC1* to value between 3-10% (typical values)
12. Set *tDef_OC1* or parameter “TD” when TOC/IDMT curves are used to insure proper time coordination with other ground-fault protections installed in the vicinity of this power line
13. Set *DirMode_OC1* to *Forward*
14. Set *DirPrinc_OC1* to *IcosPhi&U*
15. Set *ActLowVolt1_VM* to *Block*
    - In order to insure proper restraining of this element for CT saturations during three-phase faults it is possible to use current restraint feature and enable this element to operate only when *NegSeq* current is bigger than a certain percentage (10% is typical value) of measured *PosSeq* current in the power line. To do this the following settings within the same function shall be done:
16. Set *EnRestrainCurr* to *On*
17. Set *RestrCurrInput* to *PosSeq*
18. Set *RestrCurrCoeff* to value 0.1

If required, this CVGAPC function can be used in directional comparison protection scheme for the power line protection if communication channels to the remote end of this power line are available. In that case typically two *NegSeq* overcurrent steps are required. One for forward and one for reverse direction. As explained before the OC1 stage can be used to detect faults in forward direction. The built-in OC2 stage can be used to detect faults in reverse direction.

However the following shall be noted for such application:

- the set values for *RCADir* and *ROADir* settings will be as well applicable for OC2 stage
- setting *DirMode_OC2* shall be set to *Reverse*
- setting parameter *PickupCurr_OC2* shall be made more sensitive than pickup value of forward OC1 element (that is, typically 60% of OC1 set pickup level) in order to insure proper operation of the directional comparison scheme during current reversal situations
- pickup signals from OC1 and OC2 elements shall be used to send forward and reverse signals to the remote end of the power line
- the available scheme communications function block within IED shall be used between multipurpose protection function and the communication equipment in order to insure proper conditioning of the above two pickup signals

Furthermore the other built-in UC, OV and UV protection elements can be used for other protection and alarming purposes.

11.1.3.2 Negative sequence overcurrent protection

Example will be given how to use one CVGAPC function to provide negative sequence inverse time overcurrent protection for a generator with capability constant of 20s, and maximum continuous negative sequence rating of 7% of the generator rated current.

The capability curve for a generator negative sequence overcurrent protection, often used world-wide, is defined by the ANSI standard in accordance with the following formula:

$$t_{op} = \frac{TD}{\left(\frac{I_{NS}}{I_r}\right)^2}$$

(Equation 537)

where:

t_{op}	is the operating time in seconds of the negative sequence overcurrent IED
TD	is the generator capability constant in seconds
I_{NS}	is the measured negative sequence current
I_r	is the generator rated current

By defining parameter x equal to maximum continuous negative sequence rating of the generator in accordance with the following formula

$$x = 7\% = 0.07\,pu$$

(Equation 538)

Equation 537 can be re-written in the following way without changing the value for the operate time of the negative sequence inverse overcurrent IED:

$$t_{op} = \frac{TD \cdot \frac{1}{x^2}}{\left(\frac{I_{NS}}{x \cdot I_r}\right)^2}$$

(Equation 539)

In order to achieve such protection functionality with one CVGAPC functions the following must be done:

1. Connect three-phase generator currents to one CVGAPC instance (for example, GF01)
2. Set parameter *CurrentInput* to value *NegSeq*
3. Set base current value to the rated generator current in primary amperes
4. Enable one overcurrent step (for example, OC1)
5. Select parameter *CurveType_OC1* to value *Programmable*

$$t_{op} = TD \cdot \left(\frac{A}{M^P - C} + B \right)$$

(Equation 540)

where:

t*op*	is the operating time in seconds of the Inverse Time Overcurrent TOC/IDMT algorithm
TD	is time multiplier (parameter setting)
M	is ratio between measured current magnitude and set pickup current level
A, B, C and P	are user settable coefficients which determine the curve used for Inverse Time Overcurrent TOC/IDMT calculation

When the equation 537 is compared with the equation 539 for the inverse time characteristic of the OC1 it is obvious that if the following rules are followed:

1. set TD equal to the generator negative sequence capability value
2. set *A_OC1* equal to the value 1/x2
3. set *B_OC1* = 0.0, *C_OC1*=0.0 and *P_OC1*=2.0
4. set *PickupCurr_OC1* equal to the value x

then the OC1 step of the CVGAPC function can be used for generator negative sequence inverse overcurrent protection.

For this particular example the following settings shall be entered to insure proper function operation:

1. select negative sequence current as measuring quantity for this CVGAPC function
2. make sure that the base current value for the CVGAPC function is equal to the generator rated current
3. set *TD_OC1* = 20
4. set *A_OC1*= $1/0.07^2$ = 204.0816
5. set *B_OC1* = 0.0, C_OC1 = 0.0 and *P_OC1* = 2.0
6. set *PickupCurr_OC1* = 7%

Proper timing of the CVGAPC function made in this way can easily be verified by secondary injection. All other settings can be left at the default values. If required delayed time reset for OC1 step can be set in order to ensure proper function operation in case of repetitive unbalance conditions.

Furthermore the other built-in protection elements can be used for other protection and alarming purposes (for example, use OC2 for negative sequence overcurrent alarm and OV1 for negative sequence overvoltage alarm).

11.1.3.3 Generator stator overload protection in accordance with IEC or ANSI standards

Example will be given how to use one CVGAPC function to provide generator stator overload protection in accordance with IEC or ANSI standard if minimum-operating current shall be set to 116% of generator rating.

The generator stator overload protection is defined by IEC or ANSI standard for turbo generators in accordance with the following formula:

$$t_{op} = \frac{TD}{\left(\frac{I_m}{I_r}\right)^2 - 1}$$

(Equation 541)

where:

t_{op}	is the operating time of the generator stator overload IED
TD	is the generator capability constant in accordance with the relevant standard (TD = 37.5 for the IEC standard or TD = 41.4 for the ANSI standard)
I_m	is the magnitude of the measured current
I_r	is the generator rated current

This formula is applicable only when measured current (for example, positive sequence current) exceeds a pre-set value (typically in the range from 105 to 125% of the generator rated current).

By defining parameter x equal to the per unit value for the desired pickup for the overload IED in accordance with the following formula:

$$x = 116\% = 1.16\,pu$$

(Equation 542)

formula 3.5can be re-written in the following way without changing the value for the operate time of the generator stator overload IED:

$$t_{op} = \frac{TD \cdot \frac{1}{x^2}}{\left(\frac{I_m}{x \cdot I_r}\right)^2 - \frac{1}{x^2}}$$

(Equation 543)

In order to achieve such protection functionality with one CVGAPC functions the following must be done:

1. Connect three-phase generator currents to one CVGAPC instance (for example, GF01)
2. Set parameter *CurrentInput* to value *PosSeq*
3. Set base current value to the rated generator current in primary amperes
4. Enable one overcurrent step (for example OC1)
5. Select parameter *CurveType_OC1* to value *Programmable*

$$t_{op} = TD \cdot \left(\frac{A}{M^P - C} + B \right)$$

(Equation 544)

where:

t_{op}	is the operating time in seconds of the Inverse Time Overcurrent TOC/IDMT algorithm
TD	is time multiplier (parameter setting)
M	is ratio between measured current magnitude and set pickup current level
A, B, C and P	are user settable coefficients which determine the curve used for Inverse Time Overcurrent TOC/IDMT calculation

When the equation 543 is compared with the equation 544 for the inverse time characteristic of the OC1 step in it is obvious that if the following rules are followed:

1. set TD equal to the IEC or ANSI standard generator capability value
2. set parameter *A_OC1* equal to the value 1/x2
3. set parameter *C_OC1* equal to the value 1/x2
4. set parameters *B_OC1* = 0.0 and *P_OC1*=2.0
5. set *PickupCurr_OC1* equal to the value x

then the OC1 step of the CVGAPC function can be used for generator negative sequence inverse overcurrent protection.

1. select positive sequence current as measuring quantity for this CVGAPC function
2. make sure that the base current value for CVGAPC function is equal to the generator rated current
3. set TD = 37.5 for the IEC standard or TD = 41.4 for the ANSI standard
4. set *A_OC1*= 1/1.162 = 0.7432
5. set *C_OC1*= 1/1.162 = 0.7432
6. set *B_OC1* = 0.0 and *P_OC1* = 2.0
7. set *PickupCurr_OC1* = 116%

Proper timing of CVGAPC function made in this way can easily be verified by secondary injection. All other settings can be left at the default values. If required delayed time reset for OC1 step can be set in order to insure proper function operation in case of repetitive overload conditions.

Furthermore the other built-in protection elements can be used for other protection and alarming purposes.

In the similar way rotor overload protection in accordance with ANSI standard can be achieved.

11.1.3.4 Open phase protection for transformer, lines or generators and circuit breaker head flashover protection for generators

Example will be given how to use one CVGAPC function to provide open phase protection. This can be achieved by using one CVGAPC function by comparing the unbalance current with a pre-set level. In order to make such a function more secure it is possible to restrain it by requiring that at the same time the measured unbalance current must be bigger than 97% of the maximum phase current. By doing this it will be insured that function can only pickup if one of the phases is open circuited. Such an arrangement is easy to obtain in CVGAPC function by enabling the current restraint feature. The following shall be done in order to insure proper operation of the function:

1. Connect three-phase currents from the protected object to one CVGAPC instance (for example, GF03)
2. Set *CurrentInput* to value *UnbalancePh*
3. Set *EnRestrainCurr* to *On*
4. Set *RestrCurrInput* to *MaxPh*
5. Set *RestrCurrCoeff* to value 0.97
6. Set base current value to the rated current of the protected object in primary amperes
7. Enable one overcurrent step (for example, OC1)
8. Select parameter *CurveType_OC1* to value *IEC Def. Time*
9. Set parameter *PickupCurr_OC1* to value 5%
10. Set parameter *tDef_OC1* to desired time delay (for example, 2.0s)

Proper operation of CVGAPC function made in this way can easily be verified by secondary injection. All other settings can be left at the default values. However it shall be noted that set values for restrain current and its coefficient will as well be applicable for OC2 step as soon as it is enabled.

Furthermore the other built-in protection elements can be used for other protection and alarming purposes. For example, in case of generator application by enabling OC2 step with set pickup to 200% and time delay to 0.1s simple but effective protection against circuit breaker head flashover protection is achieved.

11.1.3.5 Voltage restrained overcurrent protection for generator and step-up transformer

Example will be given how to use one CVGAPC function to provide voltage restrained overcurrent protection for a generator. Let us assume that the time coordination study gives the following required settings:

- Inverse Time Over Current TOC/IDMT curve: ANSI very inverse
- Pickup current of 185% of generator rated current at rated generator voltage
- Pickup current 25% of the original pickup current value for generator voltages below 25% of rated voltage

This functionality can be achieved by using one CVGAPC function. The following shall be done in order to insure proper operation of the function:

1. Connect three-phase generator currents and voltages to one CVGAPC instance (for example, GF05)
2. Set *CurrentInput* to value *MaxPh*
3. Set *VoltageInput* to value *MinPh-Ph* (it is assumed that minimum phase-to-phase voltage shall be used for restraining. Alternatively, positive sequence voltage can be used for restraining by selecting *PosSeq* for this setting parameter)
4. Set base current value to the rated generator current primary amperes
5. Set base voltage value to the rated generator phase-to-phase voltage in kV
6. Enable one overcurrent step (for example, OC1)
7. Select *CurveType_OC1* to value *ANSI Very inv*
8. If required set minimum operating time for this curve by using parameter *tMin_OC1* (default value 0.05s)
9. Set *PickupCurr_OC1* to value 185%
10. Set *VCntrlMode_OC1* to *On*
11. Set *VDepMode_OC1* to *Slope*
12. Set *VDepFact_OC1* to value 0.25
13. Set *VHighLimit_OC1* to value 100%
14. Set *VLowLimit_OC1* to value 25%

Proper operation of the CVGAPC function made in this way can easily be verified by secondary injection. All other settings can be left at the default values. Furthermore the other built-in protection elements can be used for other protection and alarming purposes.

11.1.3.6 Loss of excitation protection for a generator

Example will be given how by using positive sequence directional overcurrent protection element within a CVGAPC function, loss of excitation protection for a generator can be achieved. Let us assume that from rated generator data the following values are calculated:

- Maximum generator capability to contentiously absorb reactive power at zero active loading 38% of the generator MVA rating
- Generator pull-out angle 84 degrees

This functionality can be achieved by using one CVGAPC function. The following shall be done in order to insure proper operation of the function:

1. Connect three-phase generator currents and three-phase generator voltages to one CVGAPC instance (for example, GF02)
2. Set parameter *CurrentInput* to *PosSeq*
3. Set parameter *VoltageInput* to *PosSeq*
4. Set base current value to the rated generator current primary amperes
5. Set base voltage value to the rated generator phase-to-phase voltage in kV
6. Set parameter *RCADir* to value -84 degree (that is, current lead voltage for this angle)
7. Set parameter *ROADir* to value 90 degree
8. Set parameter *LowVolt_VM* to value 5%
9. Enable one overcurrent step (for example, OC1)
10. Select parameter *CurveType_OC1* to value *IEC Def. Time*
11. Set parameter *PickupCurr_OC1* to value 38%
12. Set parameter *tDef_OC1* to value 2.0s (typical setting)
13. Set parameter *DirMode_OC1* to *Forward*
14. Set parameter *DirPrinc_OC1* to *IcosPhi&V*
15. Set parameter *ActLowVolt1_VM* to *Block*

Proper operation of the CVGAPC function made in this way can easily be verified by secondary injection. All other settings can be left at the default values. However it shall be noted that set values for RCA & ROA angles will be applicable for OC2 step if directional feature is enabled for this step as well. Figure 304 shows overall protection characteristic

Furthermore the other build-in protection elements can be used for other protection and alarming purposes.

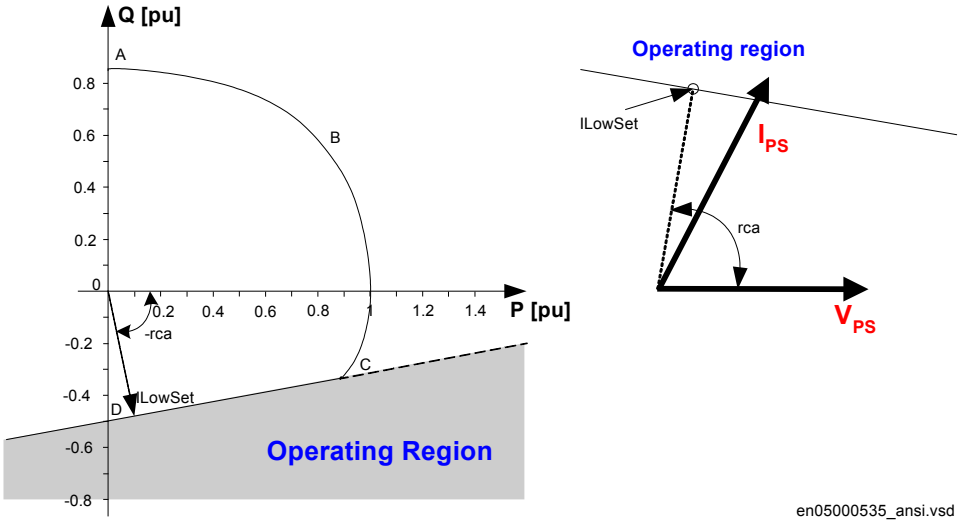

Figure 304: Loss of excitation

Section 12 System protection and control

12.1 Multipurpose filter SMAIHPAC

12.1.1 Identification

Function description	IEC 61850 identification	IEC 60617 identification	ANSI/IEEE C37.2 device number
Multipurpose filter	SMAIHPAC	-	-

12.1.2 Application

The multi-purpose filter, function block with name SMAI HPAC, is arranged as a three-phase filter. It has very much the same user interface (e.g. function block outputs) as the standard pre-processing function block SMAI. However the main difference is that it can be used to extract any frequency component from the input signal. For all four analogue input signals into this filter (i.e. three phases and the residual quantity) the input samples from the TRM module, which are coming at rate of 20 samples per fundamental system cycle, are first stored. When enough samples are available in the internal memory, the phasor values at set frequency defined by the setting parameter *SetFrequency* are calculated. The following values are internally available for each of the calculated phasors:

- Magnitude
- Phase angle
- Exact frequency of the extracted signal

The SMAI HPAC filter is always used in conjunction with some other protection function (e.g. multi-purpose protection function or overcurrent function or over-voltage function or over-power function). In this way many different protection applications can be arranged. For example the following protection, monitoring or measurement features can be realized:

- Sub-synchronous resonance protection for turbo generators
- Sub-synchronous protection for wind turbines/wind farms
- Detection of sub-synchronous oscillation between HVDC links and synchronous generators
- Super-synchronous protection
- Detection of presence of the geo-magnetic induced currents
- Overcurrent or overvoltage protection at specific frequency harmonic, sub-harmonic, inter-harmonic etc.
- Presence of special railway frequencies (e.g. 16.7Hz or 25Hz) in the three-phase power system
- Sensitive reverse power protection
- Stator or rotor earth fault protection for special injection frequencies (e.g. 25Hz)
- etc.

The filter output can also be connected to the measurement function blocks such as CVMMXN (Measurements), CMMXU (Phase current measurement), VMMXU (Phase-phase voltage measurement), etc. in order to report the extracted phasor values to the supervisory system (e.g. MicroSCADA).

The following figure shoes typical configuration connections required to utilize this filter in conjunction with multi-purpose function as non-directional overcurrent protection.

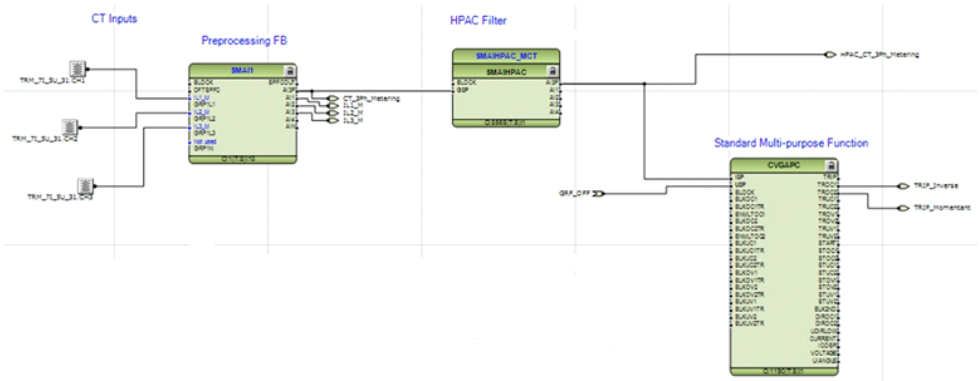

Figure 305: Required ACT configuration

Such overcurrent arrangement can be for example used to achieve the subsynchronous resonance protection for turbo generators.

12.1.3 Setting guidelines

12.1.3.1 Setting example

A relay type used for generator subsynchronous resonance overcurrent protection shall be replaced. The relay had inverse time operating characteristic as given with the following formula:

$$t_{op} = T_{01} + \frac{K}{I_s}$$

(Equation 545)

Where:

- t_{op} is the operating time of the relay
- T_{01} is fixed time delay (setting)
- K is a constant (setting)
- I_S is measured subsynchronous current in primary amperes

The existing relay was applied on a large 50Hz turbo generator which had shaft mechanical resonance frequency at 18.5Hz. The relay settings were T^{01} = 0.64 seconds, K= 35566 Amperes and minimal subsynchronous current trip level was set at I_{S0}=300 Amperes primary.

Solution with 670 series IED:

First the IED configuration shall be arranged as shown in Figure 305. Then the settings for SMAI HPAC filter and multipurpose function shall be derived from existing relay settings in the following way:

The subsynchronous current frequency is calculated as follows:

$$f_s = 50Hz - 18.5Hz = 31.5Hz$$

(Equation 546)

In order to properly extract the weak subsynchronous signal in presence of the dominating 50Hz signal the SMAI HPAC filter shall be set as given in the following table:

Table 43: Proposed settings for SMAIHPAC

I_HPAC_31_5Hz: SMAIHPAC:1	
ConnectionType	Ph — N
SetFrequency	31.5
Table continues on next page	

FreqBandWidth	0.0
FilterLength	1.0 s
OverLap	75
Operation	On

Now the settings for the multi-purpose overcurrent stage one shall be derived in order to emulate the existing relay operating characteristic. To achieve exactly the same inverse time characteristic the programmable IDMT characteristic is used which for multi-purpose overcurrent stage one, which has the following equation (for more information see Section “Inverse time characteristics” in the TRM).

$$t[s] = \left(\frac{A}{\left(\frac{i}{in>}\right)^{p} - C} + B \right) \cdot k$$

(Equation 547)

In order to adapt to the previous relay characteristic the above equation can be re-written in the following way:

$$t[s] = \left(\frac{\frac{K}{I_{so}}}{\left(\frac{I_s}{I_{so}}\right)^{1} - 0} + T_{01} \right) \cdot 1$$

(Equation 548)

Thus if the following rules are followed when multi-purpose overcurrent stage one is set:

- $in> = I_{S0} = 300A$
- $A = \frac{K}{I_{so}} = \frac{35566}{300} = 118.55$
- $B = T_{01} = 0.64$
- $C = 0.0$
- $p = 1.0$
- $k = 1.0$

then exact replica of the existing relay will be achieved. The following table summarizes all required settings for the multi-purpose function:

Setting Group1	
Operation	On
CurrentInput	MaxPh
IBase	1000
VoltageInput	MaxPh
UBase	20.50
OPerHarmRestr	Off
I_2ndI_fund	20.0
BlkLevel2nd	5000
EnRestrainCurr	Off
RestrCurrInput	PosSeq
RestrCurrCoeff	0.00
RCADir	-75
ROADir	75
LowVolt_VM	0.5

OC1	
Setting Group1	
Operation_OC1	On
StartCurr_OC1	30.0
CurrMult_OC1	2.0
CurveType_OC1	Programmable
tDef_OC1	0.00
k_OC1	1.00
tMin1	30
tMin_OC1	1.40
ResCrvType_OC1	Instantaneous
tResetDef_OC1	0.00
P_OC1	1.000
A_OC1	118.55
B_OC1	0.640
C_OC1	0.000

Section 13 Secondary system supervision

13.1 Current circuit supervision (87)

13.1.1 Identification

Function description	IEC 61850 identification	IEC 60617 identification	ANSI/IEEE C37.2 device number
Current circuit supervision	CCSSPVC	-	87

13.1.2 Application

Open or short circuited current transformer cores can cause unwanted operation of many protection functions such as differential, ground-fault current and negative-sequence current functions. When currents from two independent three-phase sets of CTs, or CT cores, measuring the same primary currents are available, reliable current circuit supervision can be arranged by comparing the currents from the two sets. If an error in any CT circuit is detected, the protection functions concerned can be blocked and an alarm given.

In case of large currents, unequal transient saturation of CT cores with different remanence or different saturation factor may result in differences in the secondary currents from the two CT sets. Unwanted blocking of protection functions during the transient stage must then be avoided.

Current circuit supervision CCSSPVC (87) must be sensitive and have short operate time in order to prevent unwanted tripping from fast-acting, sensitive numerical protections in case of faulty CT secondary circuits.

Open CT circuits creates extremely high voltages in the circuits which is extremely dangerous for the personnel. It can also damage the insulation and cause new problems.
The application shall, thus, be done with this in consideration, especially if the protection functions are blocked.

13.1.3 Setting guidelines

GlobalBaseSel: Selects the global base value group used by the function to define (*IBase*), (*VBase*) and (*SBase*).

Current circuit supervision CCSSPVC (87) compares the residual current from a three-phase set of current transformer cores with the neutral point current on a separate input taken from another set of cores on the same current transformer.

The minimum operate current, *IMinOp*, must be set as a minimum to twice the residual current in the supervised CT circuits under normal service conditions and rated primary current.

The parameter *Pickup_Block* is normally set at *150%* to block the function during transient conditions.

The FAIL output is connected to the blocking input of the protection function to be blocked at faulty CT secondary circuits.

13.2 Fuse failure supervision FUFSPVC

13.2.1 Identification

Function description	IEC 61850 identification	IEC 60617 identification	ANSI/IEEE C37.2 device number
Fuse failure supervision	FUFSPVC	-	-

13.2.2 Application

Different protection functions within the protection IED, operates on the basis of the measured voltage in the relay point. Examples are:

- impedance protection functions
- undervoltage function
- energizing check function and voltage check for the weak infeed logic

These functions can operate unintentionally if a fault occurs in the secondary circuits between the voltage instrument transformers and the IED.

It is possible to use different measures to prevent such unwanted operations. Miniature circuit breakers in the voltage measuring circuits should be located as close as possible

to the voltage instrument transformers, and shall be equipped with auxiliary contacts that are wired to the IEDs. Separate fuse-failure monitoring IEDs or elements within the protection and monitoring devices are another possibilities. These solutions are combined to get the best possible effect in the fuse failure supervision function (FUFSPVC).

FUFSPVC function built into the IED products can operate on the basis of external binary signals from the miniature circuit breaker or from the line disconnector. The first case influences the operation of all voltage-dependent functions while the second one does not affect the impedance measuring functions.

The negative sequence detection algorithm, based on the negative-sequence measuring quantities is recommended for use in isolated or high-impedance grounded networks: a high value of voltage $3V_2$ without the presence of the negative-sequence current $3I_2$ is a condition that is related to a fuse failure event.

The zero sequence detection algorithm, based on the zero sequence measuring quantities is recommended for use in directly or low impedance grounded networks: a high value of voltage $3V_0$ without the presence of the residual current $3I_0$ is a condition that is related to a fuse failure event. In cases where the line can have a weak-infeed of zero sequence current this function shall be avoided.

A criterion based on delta current and delta voltage measurements can be added to the fuse failure supervision function in order to detect a three phase fuse failure. This is beneficial for example during three phase transformer switching.

13.2.3 Setting guidelines

13.2.3.1 General

The negative and zero sequence voltages and currents always exist due to different non-symmetries in the primary system and differences in the current and voltage instrument transformers. The minimum value for the operation of the current and voltage measuring elements must always be set with a safety margin of 10 to 20%, depending on the system operating conditions.

Pay special attention to the dissymmetry of the measuring quantities when the function is used on long untransposed lines, on multicircuit lines and so on.

The settings of negative sequence, zero sequence and delta algorithm are in percent of the base voltage and base current for the function. Common base IED values for primary current (*IBase*), primary voltage (*VBase*) and primary power (*SBase*) are set in Global Base Values *GBASVAL*. The setting *GlobalBaseSel* is used to select a particular *GBASVAL* and used its base values.

13.2.3.2 Setting of common parameters

Set the operation mode selector *Operation* to *Enabled* to release the fuse failure function.

The voltage threshold *VPPU* is used to identify low voltage condition in the system. Set *VPPU* below the minimum operating voltage that might occur during emergency conditions. We propose a setting of approximately 70% of *VBase*.

The drop off time of 200 ms for dead phase detection makes it recommended to always set *SealIn* to *Enabled* since this will secure a fuse failure indication at persistent fuse fail when closing the local breaker when the line is already energized from the other end. When the remote breaker closes the voltage will return except in the phase that has a persistent fuse fail. Since the local breaker is open there is no current and the dead phase indication will persist in the phase with the blown fuse. When the local breaker closes the current will start to flow and the function detects the fuse failure situation. But due to the 200 ms drop off timer the output BLKZ will not be activated until after 200 ms. This means that distance functions are not blocked and due to the “no voltage but current” situation might issue a trip.

The operation mode selector *OpModeSel* has been introduced for better adaptation to system requirements. The mode selector enables selecting interactions between the negative sequence and zero sequence algorithm. In normal applications, the *OpModeSel* is set to either *V2I2* for selecting negative sequence algorithm or *V0I0* for zero sequence based algorithm. If system studies or field experiences shows that there is a risk that the fuse failure function will not be activated due to the system conditions, the dependability of the fuse failure function can be increased if the *OpModeSel* is set to *V0I0 OR V2I2* or *OptimZsNs*. In mode *V0I0 OR V2I2* both negative and zero sequence based algorithms are activated and working in an OR-condition. Also in mode *OptimZsNs* both negative and zero sequence algorithms are activated and the one that has the highest magnitude of measured negative or zero sequence current will operate. If there is a requirement to increase the security of the fuse failure function *OpModeSel* can be selected to *V0I0 AND V2I2* which gives that both negative and zero sequence algorithms are activated and working in an AND-condition, that is, both algorithms must give condition for block in order to activate the output signals BLKV or BLKZ.

13.2.3.3 Negative sequence based

The relay setting value *3V2PU* is given in percentage of the base voltage *VBase* and should not be set lower than the value that is calculated according to equation 549.

$$3V2PU = \frac{3V2}{VBase} \cdot 100$$

(Equation 549)

where:

3V2PU is the maximal negative sequence voltage during normal operation conditions, plus a margin of 10...20%

VBase is the base voltage for the function according to the setting *GlobalBaseSel*

The setting of the current limit *3I2PU* is in percentage of parameter *IBase*. The setting of *3I2PU* must be higher than the normal unbalance current that might exist in the system and can be calculated according to equation 550.

$$3I2PU = \frac{3I2}{IBase} \cdot 100$$

(Equation 550)

where:

3I2 is the maximal negative sequence current during normal operating conditions, plus a margin of 10...20%

IBase is the base current for the function according to the setting *GlobalBaseSel*

13.2.3.4 Zero sequence based

The IED setting value *3V0PU* is given in percentage of the base voltage *VBase*. The setting of *3V0PU* should not be set lower than the value that is calculated according to equation 551.

$$3V0PU = \frac{3V0}{VBase} \cdot 100$$

(Equation 551)

where:

3V0 is the maximal zero sequence voltage during normal operation conditions, plus a margin of 10...20%

VBase is the base voltage for the function according to the setting *GlobalBaseSel*

The setting of the current limit *3I0PU* is done in percentage of *IBase*. The setting of pickup must be higher than the normal unbalance current that might exist in the system. The setting can be calculated according to equation 552.

$$3I0PU = \frac{3I0}{IBase} \cdot 100$$

(Equation 552)

where:

3I0PU is the maximal zero sequence current during normal operating conditions, plus a margin of 10...20%

IBase is the base current for the function according to the setting *GlobalBaseSel*

13.2.3.5 Delta V and delta I

Set the operation mode selector *OpDVDI* to *Enabled* if the delta function shall be in operation.

The setting of *DVPU* should be set high (approximately 60% of *VBase*) and the current threshold *DIPU* low (approximately 10% of *IBase*) to avoid unwanted operation due to normal switching conditions in the network. The delta current and delta voltage function shall always be used together with either the negative or zero sequence algorithm. If $VSet_{prim}$ is the primary voltage for operation of dU/dt and $ISet_{prim}$ the primary current for operation of dI/dt, the setting of *DVPU* and *DIPU* will be given according to equation 553 and equation 554.

$$DVPU = \frac{VSet_{prim}}{VBase} \cdot 100$$

(Equation 553)

$$DIPU = \frac{ISet_{prim}}{IBase} \cdot 100$$

(Equation 554)

The voltage thresholds *VPPU* is used to identify low voltage condition in the system. Set *VPPU* below the minimum operating voltage that might occur during emergency conditions. A setting of approximately 70% of *VBase* is recommended.

The current threshold *50P* shall be set lower than the *IMinOp* for the distance protection function. A 5...10% lower value is recommended.

13.2.3.6 Dead line detection

The condition for operation of the dead line detection is set by the parameters *IDLDPU* for the current threshold and *UDLD*< for the voltage threshold.

Set the *IDLDPU* with a sufficient margin below the minimum expected load current. A safety margin of at least 15-20% is recommended. The operate value must however exceed the maximum charging current of an overhead line, when only one phase is disconnected (mutual coupling to the other phases).

Set the *VDLDPU* with a sufficient margin below the minimum expected operating voltage. A safety margin of at least 15% is recommended.

13.3 Fuse failure supervision VDSPVC (60)

13.3.1 Identification

Function description	IEC 61850 identification	IEC 60617 identification	ANSI/IEEE C37.2 device number
Fuse failure supervision	VDSPVC	VTS	60

13.3.2 Application

Some protection functions operate on the basis of measured voltage at the relay point. Examples of such protection functions are distance protection function, undervoltage function and energisation-check function. These functions might mal-operate if there is an incorrect measured voltage due to fuse failure or other kind of faults in voltage measurement circuit.

VDSPVC is designed to detect fuse failures or faults in voltage measurement circuit based on comparison of the voltages of the main and pilot fused circuits phase wise. VDSPVC output can be configured to block voltage dependent protection functions such as high-speed distance protection, undervoltage relays, underimpedance relays and so on.

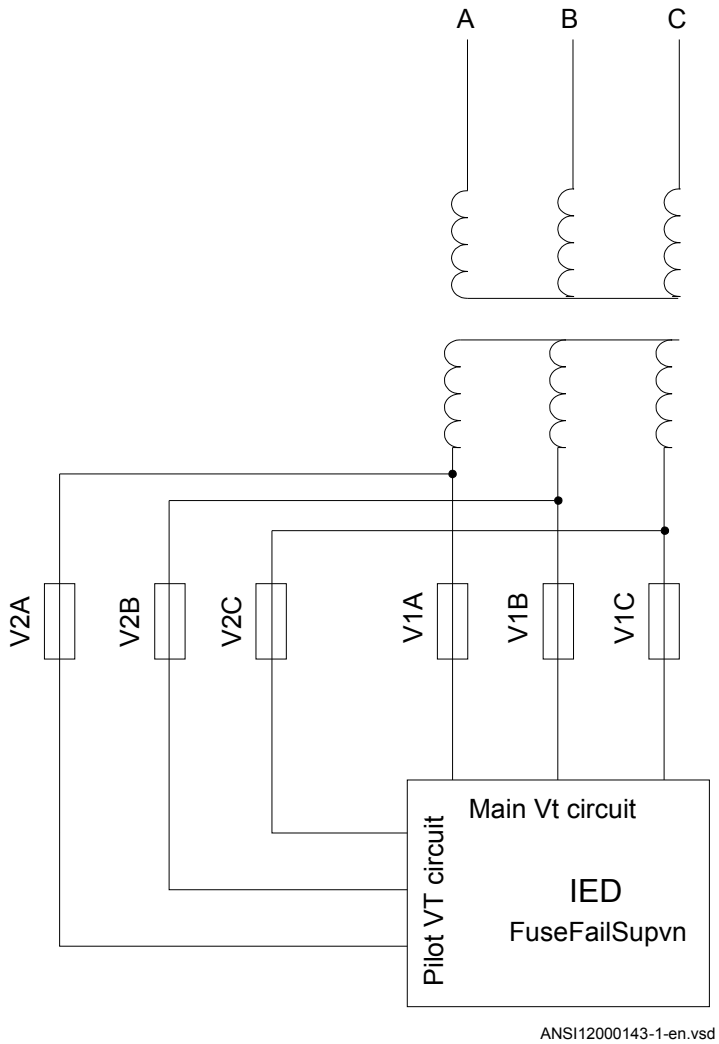

Figure 306: Application of VDSPVC

13.3.3 Setting guidelines

The parameters for Fuse failure supervision VDSPVC are set via the local HMI or PCM600.

The voltage input type (phase-to-phase or phase-to-neutral) is selected using *ConTypeMain* and *ConTypePilot* parameters, for main and pilot fuse groups respectively.

The connection type for the main and the pilot fuse groups must be consistent.

The settings *Vdif Main block*, *Vdif Pilot alarm* and *VSealIn* are in percentage of the base voltage, *VBase*. Set *VBase* to the primary rated phase-to-phase voltage of the potential voltage transformer. *VBase* is available in the Global Base Value groups; the particular Global Base Value group, that is used by VDSPVC (60), is set by the setting parameter *GlobalBaseSel*.

The settings *Vdif Main block* and *Vdif Pilot alarm* should be set low (approximately 30% of *VBase*) so that they are sensitive to the fault on the voltage measurement circuit, since the voltage on both sides are equal in the healthy condition. If $V_{SetPrim}$ is the desired pick up primary phase-to-phase voltage of measured fuse group, the setting of *Vdif Main block* and *Vdif Pilot alarm* will be given according to equation 555.

$$\text{Vdif Main block or Vdif Pilot alarm} = \frac{V_{SetPrim}}{V_{Base}} \cdot 100$$

(Equation 555)

$V_{SetPrim}$ is defined as phase to neutral or phase to phase voltage dependent of the selected *ConTypeMain* and *ConTypePilot*. If *ConTypeMain* and *ConTypePilot* are set to *Ph-N* than the function performs internally the rescaling of $V_{SetPrim}$.

When *SealIn* is set to *On* and the fuse failure has last for more than 5 seconds, the blocked protection functions will remain blocked until normal voltage conditions are restored above the *VSealIn* setting. The fuse failure outputs are deactivated when the normal voltage conditions are restored.

Section 14 Control

14.1 Synchronism check, energizing check, and synchronizing SESRSYN (25)

14.1.1 Identification

Function description	IEC 61850 identification	IEC 60617 identification	ANSI/IEEE C37.2 device number
Synchrocheck, energizing check, and synchronizing	SESRSYN	*sc/vc*	25

14.1.2 Application

14.1.2.1 Synchronizing

To allow closing of breakers between asynchronous networks a synchronizing function is provided. The breaker close command is issued at the optimum time when conditions across the breaker are satisfied in order to avoid stress on the network and its components.

The systems are defined to be asynchronous when the frequency difference between bus and line is larger than an adjustable parameter. If the frequency difference is less than this threshold value the system is defined to have a parallel circuit and the synchronism check function is used.

The synchronizing function measures the difference between the V-Line and the V-Bus. It operates and enables a closing command to the circuit breaker when the calculated closing angle is equal to the measured phase angle and the following conditions are simultaneously fulfilled:

- The voltages V-Line and V-Bus are higher than the set values for *VHighBusSynch* and *VHighLineSynch* of the base voltages *GblBaseSelBus* and *GblBaseSelLine*.
- The difference in the voltage is smaller than the set value of *VDiffSynch*.
- The difference in frequency is less than the set value of *FreqDiffMax* and larger than the set value of *FreqDiffMin*. If the frequency is less than *FreqDiffMin* the synchronism check is used and the value of *FreqDiffMin* must thus be identical to the value *FreqDiffM* resp *FreqDiffA* for synchronism check function. The bus and line frequencies must also be within a range of +/- 5 Hz from the rated frequency. When the synchronizing option is included also for autoreclose there is no reason to have different frequency setting for the manual and automatic reclosing and the frequency difference values for synchronism check should be kept low.
- The frequency rate of change is less than set value for both V-Bus and V-Line.
- The closing angle is decided by the calculation of slip frequency and required pre-closing time.

The synchronizing function compensates for measured slip frequency as well as the circuit breaker closing delay. The phase angle advance is calculated continuously. Closing angle is the change in angle during the set breaker closing operate time *tBreaker*.

The reference voltage can be phase-neutral A, B, C or phase-phase A-B, B-C, C-A or positive sequence (Require a three phase voltage, that is VA, VB and VC) . By setting the phases used for SESRSYN, with the settings *SelPhaseBus1*, *SelPhaseBus2*, *SelPhaseLine2* and *SelPhaseLine2*, a compensation is made automatically for the voltage amplitude difference and the phase angle difference caused if different setting values are selected for the two sides of the breaker. If needed an additional phase angle adjustment can be done for selected line voltage with the *PhaseShift* setting.

14.1.2.2 Synchronism check

The main purpose of the synchronism check function is to provide control over the closing of circuit breakers in power networks in order to prevent closing if conditions for synchronism are not detected. It is also used to prevent the re-connection of two systems, which are divided after islanding and after a three pole reclosing.

Single pole auto-reclosing does not require any synchronism check since the system is tied together by two phases.

SESRSYN (25) function block includes both the synchronism check function and the energizing function to allow closing when one side of the breaker is dead. SESRSYN (25) function also includes a built in voltage selection scheme which allows adoption to various busbar arrangements.

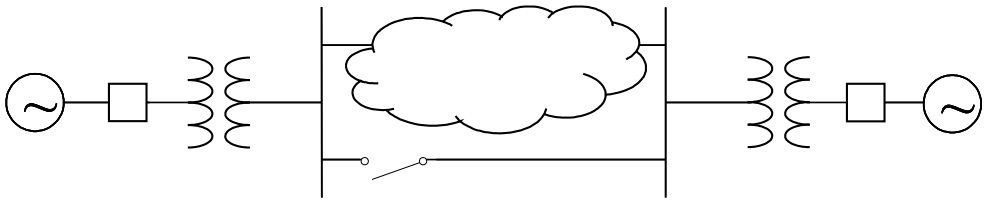

en04000179_ansi.vsd

Figure 307: Two interconnected power systems

Figure 307 shows two interconnected power systems. The cloud means that the interconnection can be further away, that is, a weak connection through other stations. The need for a check of synchronization increases if the meshed system decreases since the risk of the two networks being out of synchronization at manual or automatic closing is greater.

The synchronism check function measures the conditions across the circuit breaker and compares them to set limits. Output is generated only when all measured conditions are within their set limits simultaneously. The check consists of:

- Live line and live bus.
- Voltage level difference.
- Frequency difference (slip). The bus and line frequency must also be within a range of ±5 Hz from rated frequency.
- Phase angle difference.

A time delay is available to ensure that the conditions are fulfilled for a minimum period of time.

In very stable power systems the frequency difference is insignificant or zero for manually initiated closing or closing by automatic restoration. In steady conditions a bigger phase angle difference can be allowed as this is sometimes the case in a long and loaded parallel power line. For this application we accept a synchronism check with a long operation time and high sensitivity regarding the frequency difference. The phase angle difference setting can be set for steady state conditions.

Another example is the operation of a power network that is disturbed by a fault event: after the fault clearance a highspeed auto-reclosing takes place. This can cause a power swing in the net and the phase angle difference may begin to oscillate. Generally, the frequency difference is the time derivative of the phase angle difference and will, typically oscillate between positive and negative values. When the circuit breaker needs to be closed by auto-reclosing after fault-clearance some frequency difference should be tolerated, to a greater extent than in the steady condition mentioned in the case above. But if a big phase angle difference is allowed at the same time, there is some risk that auto-reclosing will take place when the phase angle difference is big and

increasing. In this case it should be safer to close when the phase angle difference is smaller.

To fulfill the above requirements the synchronism check function is provided with duplicate settings, one for steady (Manual) conditions and one for operation under disturbed conditions (Auto).

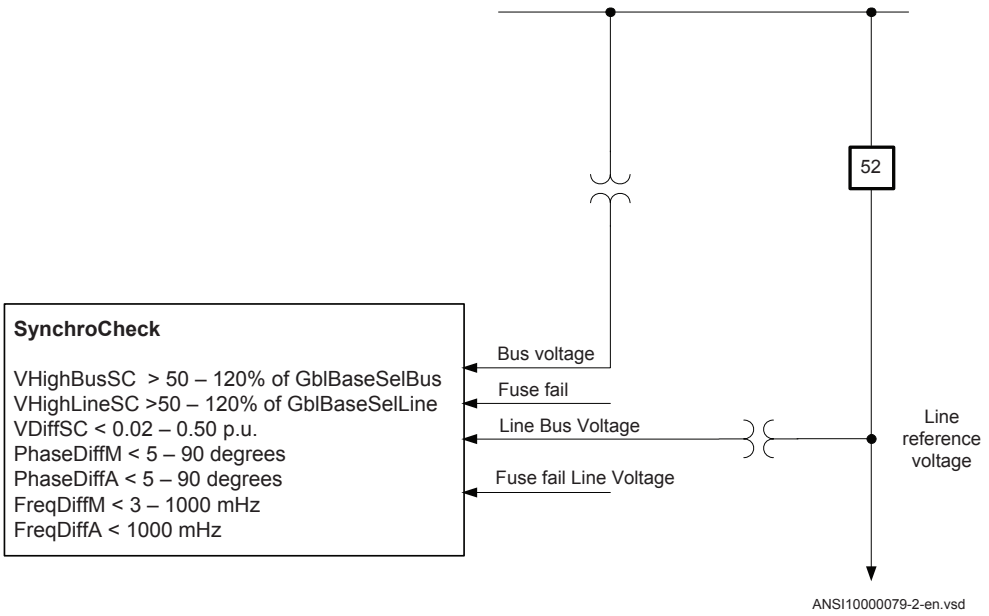

Figure 308: Principle for the synchronism check function

14.1.2.3 Energizing check

The main purpose of the energizing check function is to facilitate the controlled re-connection of disconnected lines and buses to energized lines and buses.

The energizing check function measures the bus and line voltages and compares them to both high and low threshold values. The output is given only when the actual measured conditions match the set conditions. Figure 309 shows two substations, where one (1) is energized and the other (2) is not energized. The line between CB A and CB B is energized (DLLB) from substation 1 via the circuit breaker A and energization of station 2 is done by CB B energization check device for that breaker DBLL. (or Both).

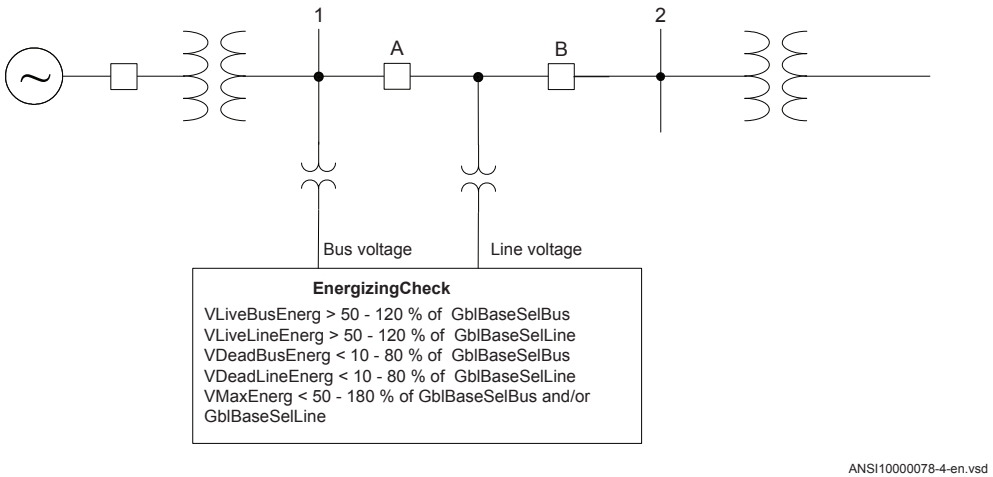

Figure 309: Principle for the energizing check function

The energizing operation can operate in the dead line live bus (DLLB) direction, dead bus live line (DBLL) direction, or in both directions over the circuit breaker. Energizing from different directions can be different for automatic reclosing and manual closing of the circuit breaker. For manual closing it is also possible to allow closing when both sides of the breaker are dead, Dead Bus Dead Line (DBDL).

The equipment is considered energized (Live) if the voltage is above the set value for *VLiveBusEnerg* or *VLiveLineEnerg* of the base voltages *GblBaseSelBus* and *VGblBaseSelLine*, which are defined in the Global Base Value groups, according to the setting of *GblBaseSelBus* and *GblBaseSelLine*; in a similar way, the equipment is considered non-energized (Dead) if the voltage is below the set value for *VDeadBusEnerg* or *VDeadLineEnerg* of the Global Base Value groups. A disconnected line can have a considerable potential due to factors such as induction from a line running in parallel, or feeding via extinguishing capacitors in the circuit breakers. This voltage can be as high as 50% or more of the base voltage of the line. Normally, for breakers with single breaking elements (<330 kV) the level is well below 30%.

When the energizing direction corresponds to the settings, the situation has to remain constant for a certain period of time before the close signal is permitted. The purpose of the delayed operate time is to ensure that the dead side remains de-energized and that the condition is not due to temporary interference.

14.1.2.4 Voltage selection

The voltage selection function is used for the connection of appropriate voltages to the synchronism check, synchronizing and energizing check functions. For example, when the IED is used in a double bus arrangement, the voltage that should be selected

depends on the status of the breakers and/or disconnectors. By checking the status of the disconnectors auxiliary contacts, the right voltages for the synchronism check and energizing check functions can be selected.

Available voltage selection types are for single circuit breaker with double busbars and the breaker-and-a-half arrangement. A double circuit breaker arrangement and single circuit breaker with a single busbar do not need any voltage selection function. Neither does a single circuit breaker with double busbars using external voltage selection need any internal voltage selection.

Manual energization of a completely open diameter in breaker-and-a-half switchgear is allowed by internal logic.

The voltages from busbars and lines must be physically connected to the voltage inputs in the IED and connected, using the PCM software, to each of the SESRSYN (25) functions available in the IED.

14.1.2.5 External fuse failure

Either external fuse-failure signals or signals from a tripped fuse (or miniature circuit breaker) are connected to HW binary inputs of the IED; these signals are connected to inputs of SESRSYN function in the application configuration tool of PCM600. The internal fuse failure supervision function can also be used if a three phase voltage is present. The signal BLKV, from the internal fuse failure supervision function, is then used and connected to the fuse supervision inputs of the SESRSYN function block. In case of a fuse failure, the SESRSYN energizing (25) function is blocked.

The VB1OK/VB2OK and VB1FF/VB2FF inputs are related to the busbar voltage and the VL1OK/VL2OK and VL1FF/VL2FF inputs are related to the line voltage.

External selection of energizing direction

The energizing can be selected by use of the available logic function blocks. Below is an example where the choice of mode is done from a symbol ,created in the Graphical Design Editor (GDE) tool on the local HMI, through selector switch function block, but alternatively there can for example, be a physical selector switch on the front of the panel which is connected to a binary to integer function block (B16I).

If the PSTO input is used, connected to the Local-Remote switch on the local HMI, the choice can also be from the station HMI system, typically ABB Microscada through IEC 61850–8–1 communication.

The connection example for selection of the manual energizing mode is shown in figure 310. Selected names are just examples but note that the symbol on the local HMI can only show the active position of the virtual selector.

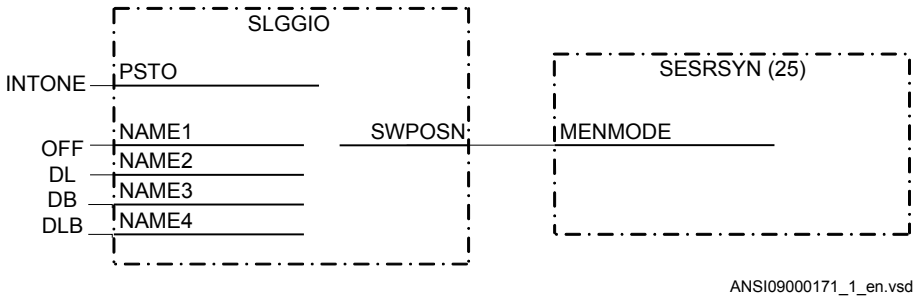

Figure 310: Selection of the energizing direction from a local HMI symbol through a selector switch function block.

14.1.3 Application examples

The synchronism check function block can also be used in some switchyard arrangements, but with different parameter settings. Below are some examples of how different arrangements are connected to the IED analog inputs and to the function block SESRSYN, 25. One function block is used per circuit breaker.

The input used below in example are typical and can be changed by use of configuration and signal matrix tools.

The SESRSYN and connected SMAI function block instances must have the same cycle time in the application configuration.

14.1.3.1 Single circuit breaker with single busbar

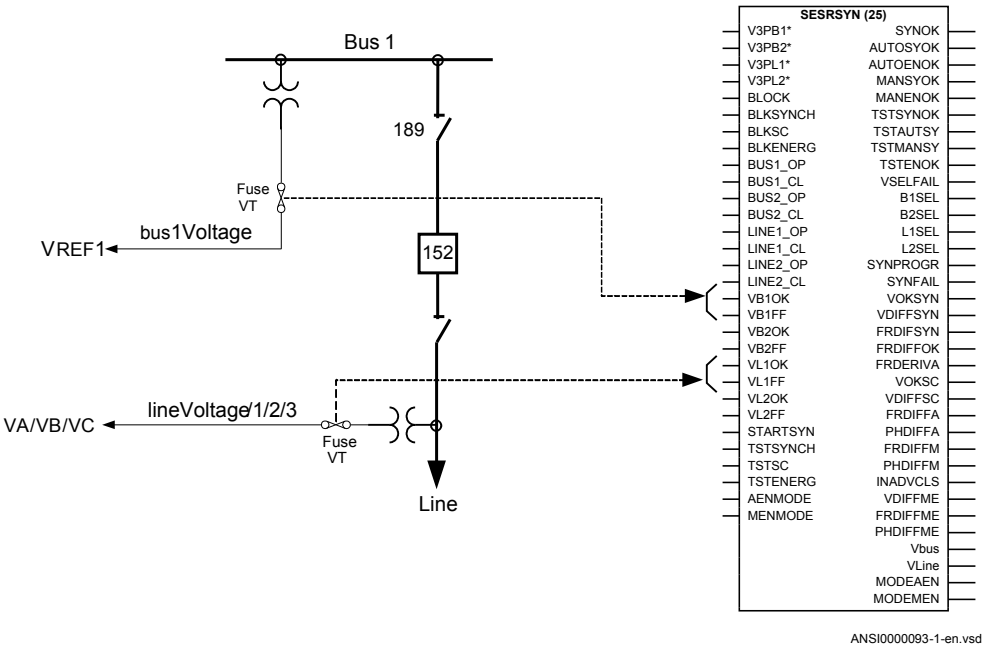

Figure 311: Connection of SESRSYN (25) function block in a single busbar arrangement

Figure 311 illustrates connection principles for a single busbar. For the SESRSYN (25) function there is one voltage transformer on each side of the circuit breaker. The voltage transformer circuit connections are straightforward; no special voltage selection is necessary.

The voltage from busbar VT is connected to V3PB1 and the voltage from the line VT is connected to V3PL1. The conditions of the VT fuses shall also be connected as shown above. The voltage selection parameter *CBConfig* is set to *No voltage sel*.

14.1.3.2 Single circuit breaker with double busbar, external voltage selection

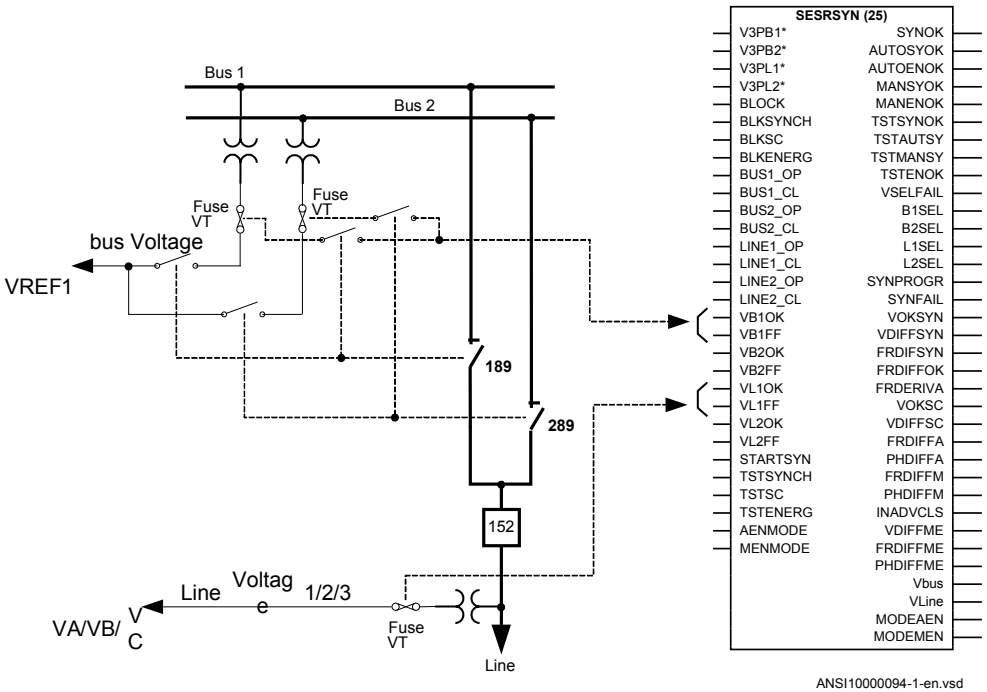

Figure 312: Connection of SESRSYN (25) function block in a single breaker, double busbar arrangement with external voltage selection

In this type of arrangement no internal voltage selection is required. The voltage selection is made by external relays typically connected according to figure 312. Suitable voltage and VT fuse failure supervision from the two busbars are selected based on the position of the busbar disconnectors. This means that the connections to the function block will be the same as for the single busbar arrangement. The voltage selection parameter *CBConfig* is set to *No voltage sel*.

14.1.3.3 Single circuit breaker with double busbar, internal voltage selection

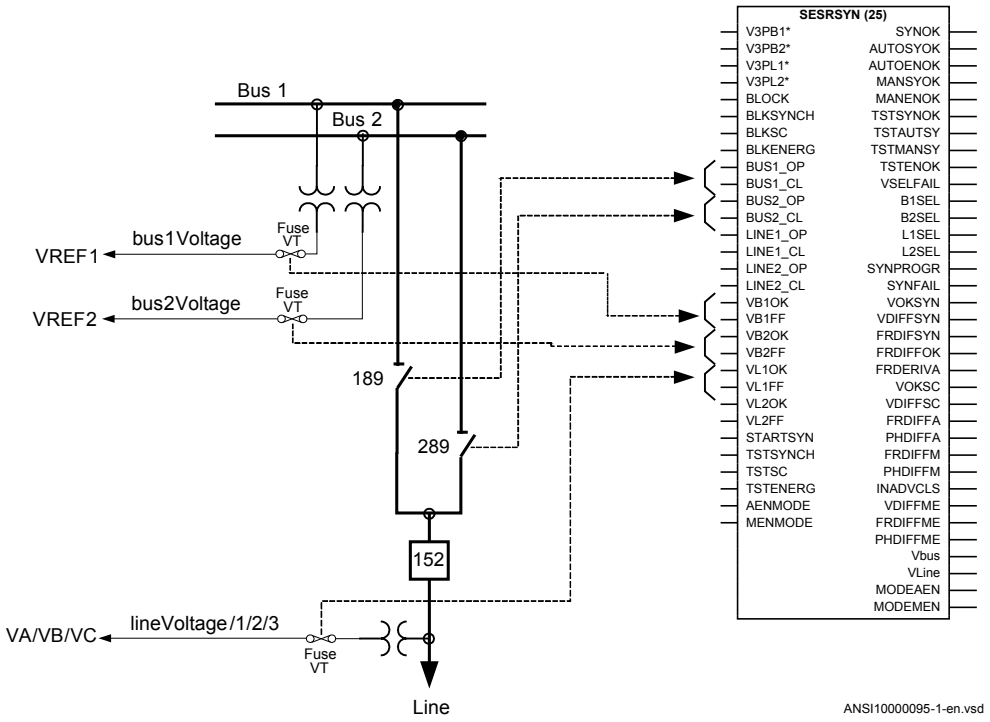

Figure 313: Connection of the SESRSYN function block in a single breaker, double busbar arrangement with internal voltage selection

When internal voltage selection is needed, the voltage transformer circuit connections are made according to figure 313. The voltage from the busbar 1 VT is connected to V3PB1 and the voltage from busbar 2 is connected to V3PB2. The voltage from the line VT is connected to V3PL1. The positions of the disconnectors and VT fuses shall be connected as shown in figure 313. The voltage selection parameter *CBConfig* is set to *Double bus*.

14.1.3.4 Double circuit breaker

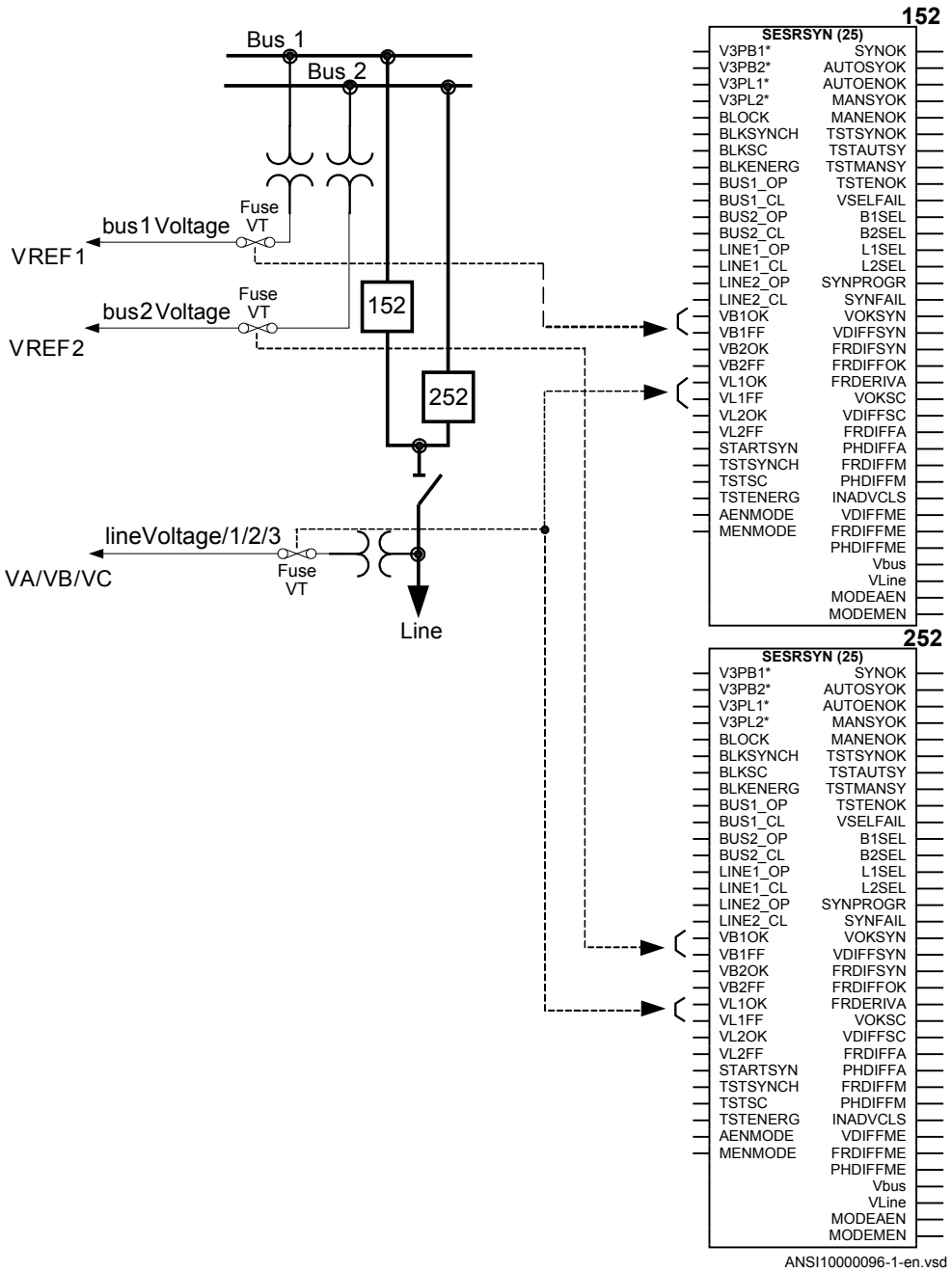

Figure 314: Connections of the SESRSYN (25) function block in a double breaker arrangement

A double breaker arrangement requires two function blocks, one for breaker WA1_QA1 and one for breaker WA2_QA1. No voltage selection is necessary, because the voltage from busbar 1 VT is connected to V3PB1 on SESRSYN for WA1_QA1 and the voltage from busbar 2 VT is connected toV3PB1 on SESRSYN for WA2_QA1. The voltage from the line VT is connected to V3PL1 on both function blocks. The condition of VT fuses shall also be connected as shown in figure 313. The voltage selection parameter *CBConfig* is set to *No voltage sel.* for both function blocks.

14.1.3.5 Breaker-and-a-half

Figure 315 describes a breaker-and-a-half arrangement with three SESRSYN functions in the same IED, each of them handling voltage selection for WA1_QA1, TIE_QA1 and WA2_QA1 breakers respectively. The voltage from busbar 1 VT is connected to V3PB1 on all three function blocks and the voltage from busbar 2 VT is connected to V3PB2 on all three function blocks. The voltage from line1 VT is connected to V3PL1 on all three function blocks and the voltage from line2 VT is connected to V3PL2 on all three function blocks. The positions of the disconnectors and VT fuses shall be connected as shown in Figure 315.

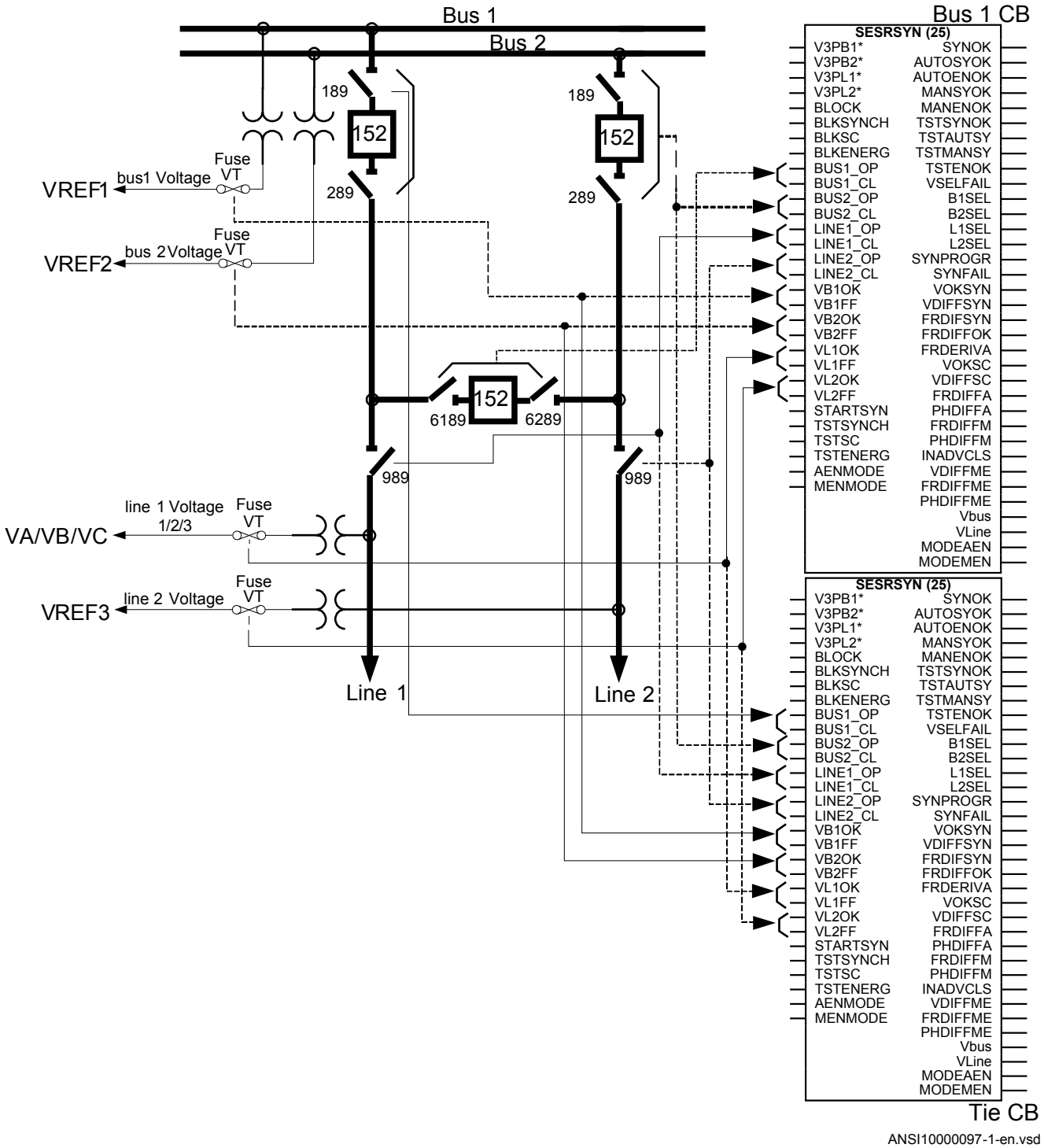

Figure 315: Connections of the SESRSYN (25) function block in a breaker-and-a-half arrangement with internal voltage selection

The connections are similar in all SESRSYN functions, apart from the breaker position indications. The physical analog connections of voltages and the connection to the IED and SESRSYN (25) function blocks must be carefully checked in PCM600. In all SESRSYN functions the connections and configurations must abide by the following rules: Normally apparatus position is connected with contacts showing both open (b-type) and closed positions (a-type).

WA1_QA1:

- BUS1_OP/CL = Position of TIE_QA1 breaker and belonging disconnectors
- BUS2_OP/CL = Position of WA2_QA1 breaker and belonging disconnectors
- LINE1_OP/CL = Position of LINE1_QB9 disconnector
- LINE2_OP/CL = Position of LINE2_QB9 disconnector
- VB1OK/FF = Supervision of WA1_MCB fuse
- VB2OK/FF = Supervision of WA2_MCB fuse
- VL1OK/FF = Supervision of LINE1_MCB fuse
- VL2OK/FF = Supervision of LINE2_MCB fuse
- Setting *CBConfig = 1 1/2 bus CB*

TIE_QA1:

- BUS1_OP/CL = Position of WA1_QA1 breaker and belonging disconnectors
- BUS2_OP/CL = Position of WA2_QA1 breaker and belonging disconnectors
- LINE1_OP/CL = Position of LINE1_QB9 disconnector
- LINE2_OP/CL = Position of LINE2_QB9 disconnector
- VB1OK/FF = Supervision of WA1_MCB fuse
- VB2OK/FF = Supervision of WA2_MCB fuse
- VL1OK/FF = Supervision of LINE1_MCB fuse
- VL2OK/FF = Supervision of LINE2_MCB fuse
- Setting *CBConfig = Tie CB*

WA2_QA1:

- BUS1_OP/CL = Position of WA1_QA1 breaker and belonging disconnectors
- BUS2_OP/CL = Position of TIE_QA1 breaker and belonging disconnectors
- LINE1_OP/CL = Position of LINE1_QB9 disconnector
- LINE2_OP/CL = Position of LINE2_QB9 disconnector
- VB1OK/FF = Supervision of WA1_MCB fuse
- VB2OK/FF = Supervision of WA2_MCB fuse
- VL1OK/FF = Supervision of LINE1_MCB fuse
- VL2OK/FF = Supervision of LINE2_MCB fuse
- Setting *CBConfig = 1 1/2 bus alt. CB*

If only two SESRSYN functions are provided in the same IED, the connections and settings are according to the SESRSYN functions for WA1_QA1 and TIE_QA1.

14.1.4 Setting guidelines

The setting parameters for the Synchronizing, synchronism check and energizing check function SESRSYN (25) are set via the local HMI (LHMI) or PCM600.

This setting guidelines describes the settings of the SESRSYN (25) function via the LHMI.

Common base IED value for primary voltage (*VBase*) is set in a Global base value function, GBASVAL, found under **Main menu//Configuration/Power system/ GlobalBaseValue/GBASVAL_X/VBase**. The SESRSYN (25) function has one setting for the bus reference voltage (*GblBaseSelBus*) and one setting for the line reference voltage (*GblBaseSelLine*) which independently of each other can be set to select one of the twelve GBASVAL functions used for reference of base values. This means that the reference voltage of bus and line can be set to different values. The settings for the SESRSYN (25) function are found under **Main menu/Settings/IED Settings/Control/Synchronizing(25,SC/VC)/SESRSYN(25,SC/VC):X** has been divided into four different setting groups: General, Synchronizing, Synchrocheck and Energizingcheck.

General settings

Operation: The operation mode can be set *Enabled* or *Disabled*. The setting *Disabled* disables the whole function.

GblBaseSelBus and *GblBaseSelLine*

These configuration settings are used for selecting one of twelve GBASVAL functions, which then is used as base value reference voltage, for bus and line respectively.

SelPhaseBus1 and *SelPhaseBus2*

Configuration parameters for selecting the measuring phase of the voltage for busbar 1 and 2 respectively, which can be a single-phase (phase-neutral), two-phase (phase-phase) or a positive sequence voltage.

SelPhaseLine1 and *SelPhaseLine2*

Configuration parameters for selecting the measuring phase of the voltage for line 1 and 2 respectively, which can be a single-phase (phase-neutral), two-phase (phase-phase) or a positive sequence voltage.

CBConfig

This configuration setting is used to define type of voltage selection. Type of voltage selection can be selected as:

- no voltage selection, *No voltage sel.*
- single circuit breaker with double bus, *Double bus*
- breaker-and-a-half arrangement with the breaker connected to busbar 1, *1 1/2 bus CB*
- breaker-and-a-half arrangement with the breaker connected to busbar 2, *1 1/2 bus alt. CB*
- breaker-and-a-half arrangement with the breaker connected to line 1 and 2, *Tie CB*

PhaseShift

This setting is used to compensate for a phase shift caused by a power transformer between the two measurement points for bus voltage and line voltage. The set value is added to the measured line phase angle. The bus voltage is reference voltage.

Synchronizing settings

OperationSynch

The setting *Off* disables the Synchronizing function. With the setting *On*, the function is in the service mode and the output signal depends on the input conditions.

VHighBusSynch and *VHighLineSynch*

The voltage level settings shall be chosen in relation to the bus/line network voltage. The threshold voltages *VHighBusSynch* and *VHighLineSynch* have to be set lower than the value where the network is expected to be synchronized. A typical value is 80% of the rated voltage.

VDiffSynch

Setting of the voltage difference between the line voltage and the bus voltage. The difference is set depending on the network configuration and expected voltages in the two networks running asynchronously. A normal setting is 0.10-0.15 p.u.

FreqDiffMin

The setting *FreqDiffMin* is the minimum frequency difference where the systems are defined to be asynchronous. For frequency differences lower than this value, the systems are considered to be in parallel. A typical value for *FreqDiffMin* is 10 mHz. Generally, the value should be low if both synchronizing and synchrocheck functions are provided, and it is better to let the synchronizing function close, as it will close at exactly the right instance if the networks run with a frequency difference.

To avoid overlapping of the synchronizing function and the synchrocheck function the setting *FreqDiffMin* must be set to a higher

value than used setting *FreqDiffM*, respective *FreqDiffA* used for synchrocheck.

FreqDiffMax

The setting *FreqDiffMax* is the maximum slip frequency at which synchronizing is accepted. 1/*FreqDiffMax* shows the time for the vector to move 360 degrees, one turn on the synchronoscope, and is called Beat time. A typical value for *FreqDiffMax* is 200-250 mHz, which gives beat times on 4-5 seconds. Higher values should be avoided as the two networks normally are regulated to nominal frequency independent of each other, so the frequency difference shall be small.

FreqRateChange

The maximum allowed rate of change for the frequency.

tBreaker

The *tBreaker* shall be set to match the closing time for the circuit breaker and should also include the possible auxiliary relays in the closing circuit. It is important to check that no slow logic components are used in the configuration of the IED as there then can be big variations in closing time due to those components. Typical setting is 80-150 ms depending on the breaker closing time.

tClosePulse

The setting for the duration of the breaker close pulse.

tMaxSynch

The setting *tMaxSynch* is set to reset the operation of the synchronizing function if the operation does not take place within this time. The setting must allow for the setting of *FreqDiffMin*, which will decide how long it will take maximum to reach phase equality. At the setting of 10 mHz, the beat time is 100 seconds and the setting would thus need to be at least *tMinSynch* plus 100 seconds. If the network frequencies are expected to be outside the limits from the start, a margin needs to be added. A typical setting is 600 seconds.

tMinSynch

The setting *tMinSynch* is set to limit the minimum time at which the synchronizing closing attempt is given. The synchronizing function will not give a closing command within this time, from when the synchronizing is started, even if a synchronizing condition is fulfilled. A typical setting is 200 ms.

Synchrocheck settings

OperationSC

The *OperationSC* setting *Off* disables the synchrocheck function and sets the outputs AUTOSYOK, MANSYOK, TSTAUTSY and TSTMANSY to low. With the setting *On*, the function is in the service mode and the output signal depends on the input conditions.

VHighBusSC and *VHighLineSC*

The voltage level settings must be chosen in relation to the bus or line network voltage. The threshold voltages *VHighBusSC* and *VHighLineSC* have to be set lower than the value at which the breaker is expected to close with the synchronism check. A typical value can be 80% of the base voltages.

VDiffSC

The setting for voltage difference between line and bus in p.u. This setting in p.u. is defined as (V-Bus/*GblBaseSelBus*) - (V-Line/*GblBaseSelLine*). A normal setting is 0,10-0,15 p.u.

FreqDiffM and *FreqDiffA*

The frequency difference level settings, *FreqDiffM* and *FreqDiffA*, shall be chosen depending on the condition in the network. At steady conditions a low frequency difference setting is needed, where the *FreqDiffM* setting is used. For autoreclosing a bigger frequency difference setting is preferable, where the *FreqDiffA* setting is used. A typical value for *FreqDiffM* can be10 mHz, and a typical value for *FreqDiffA* can be 100-200 mHz.

PhaseDiffM and *PhaseDiffA*

The phase angle difference level settings, *PhaseDiffM* and *PhaseDiffA*, shall also be chosen depending on conditions in the network. The phase angle setting must be chosen to allow closing under maximum load condition. A typical maximum value in heavy-loaded networks can be 45 degrees, whereas in most networks the maximum occurring angle is below 25 degrees. The *PhaseDiffM* setting is a limitation to *PhaseDiffA* setting. Fluctuations occurring at high speed autoreclosing limit *PhaseDiffA* setting.

tSCM and *tSCA*

The purpose of the timer delay settings, *tSCM* and *tSCA*, is to ensure that the synchrocheck conditions remains constant and that the situation is not due to a temporary interference. Should the conditions not persist for the specified time, the delay timer is reset and the procedure is restarted when the conditions are fulfilled again. Circuit breaker closing is thus not permitted until the synchrocheck situation has

remained constant throughout the set delay setting time. Manual closing is normally under more stable conditions and a longer operation time delay setting is needed, where the *tSCM* setting is used. During auto-reclosing, a shorter operation time delay setting is preferable, where the *tSCA* setting is used. A typical value for *tSCM* can be 1 second and a typical value for *tSCA* can be 0.1 seconds.

Energizingcheck settings

AutoEnerg and *ManEnerg*

Two different settings can be used for automatic and manual closing of the circuit breaker. The settings for each of them are:

- *Disabled*, the energizing function is disabled.
- *DLLB*, Dead Line Live Bus, the line voltage is below set value of *VDeadLineEnerg* and the bus voltage is above set value of *VLIveBusEnerg*.
- *DBLL*, Dead Bus Live Line, the bus voltage is below set value of *VDeadBusEnerg* and the line voltage is above set value of *VLiveLineEnerg*.
- *Both*, energizing can be done in both directions, *DLLB* or *DBLL*.

ManEnergDBDL

If the parameter is set to *Enabled*, manual closing is also enabled when both line voltage and bus voltage are below *VDeadLineEnerg* and *VDeadBusEnerg* respectively, and *ManEnerg* is set to *DLLB*, *DBLL* or *Both*.

VLiveBusEnerg and *VLiveLineEnerg*

The voltage level settings must be chosen in relation to the bus or line network voltage. The threshold voltages *VLiveBusEnerg* and *VLiveLineEnerg* have to be set lower than the value at which the network is considered to be energized. A typical value can be 80% of the base voltages.

VDeadBusEnerg and *VDeadLineEnerg*

The threshold voltages *VDeadBusEnerg* and *VDeadLineEnerg*, have to be set to a value greater than the value where the network is considered not to be energized. A typical value can be 40% of the base voltages.

A disconnected line can have a considerable potential due to, for instance, induction from a line running in parallel, or by being fed via the extinguishing capacitors in the circuit breakers. This voltage can be as high as 30% or more of the base line voltage.

Because the setting ranges of the threshold voltages *VLiveBusEnerg*/*VLiveLineEnerg* and *VDeadBusEnerg*/*VDeadLineEnerg* partly overlap each other, the setting conditions may be such that the setting of the non-energized threshold value is higher than that of the energized threshold value. The parameters must therefore be set carefully to avoid overlapping.

VMaxEnerg

This setting is used to block the closing when the voltage on the live side is above the set value of *VMaxEnerg*.

tAutoEnerg and *tManEnerg*

The purpose of the timer delay settings, *tAutoEnerg* and *tManEnerg*, is to ensure that the dead side remains de-energized and that the condition is not due to a temporary interference. Should the conditions not persist for the specified time, the delay timer is reset and the procedure is restarted when the conditions are fulfilled again. Circuit breaker closing is thus not permitted until the energizing condition has remained constant throughout the set delay setting time.

14.2 Autorecloser for 1 phase, 2 phase and/or 3 phase operation SMBRREC (79)

14.2.1 Identification

Function Description	IEC 61850 identification	IEC 60617 identification	ANSI/IEEE C37.2 device number
Autorecloser for 1 phase, 2 phase and/ or 3 phase	SMBRREC	O->I	79

14.2.2 Application

Automatic reclosing is a well-established method for the restoration of service in a power system after a transient line fault. The majority of line faults are flashover arcs, which are transient by nature. When the power line is switched off by the operation of line protection and line breakers, the arc de-ionizes and recovers its ability to withstand voltage at a somewhat variable rate. Thus, a certain dead time with a de-energized line is necessary. Line service can then be resumed by automatic reclosing of the line

breakers. The dead time selected should be long enough to ensure a high probability of arc de-ionization and successful reclosing.

For individual line breakers, auto-reclosing equipment, the auto-reclosing open time is used to determine line “dead time”. When simultaneous tripping and reclosing at the two line ends occurs, auto-reclosing open time is approximately equal to the line “dead time”. If the open time and dead time differ then, the line will be energized until the breakers at both ends have opened.

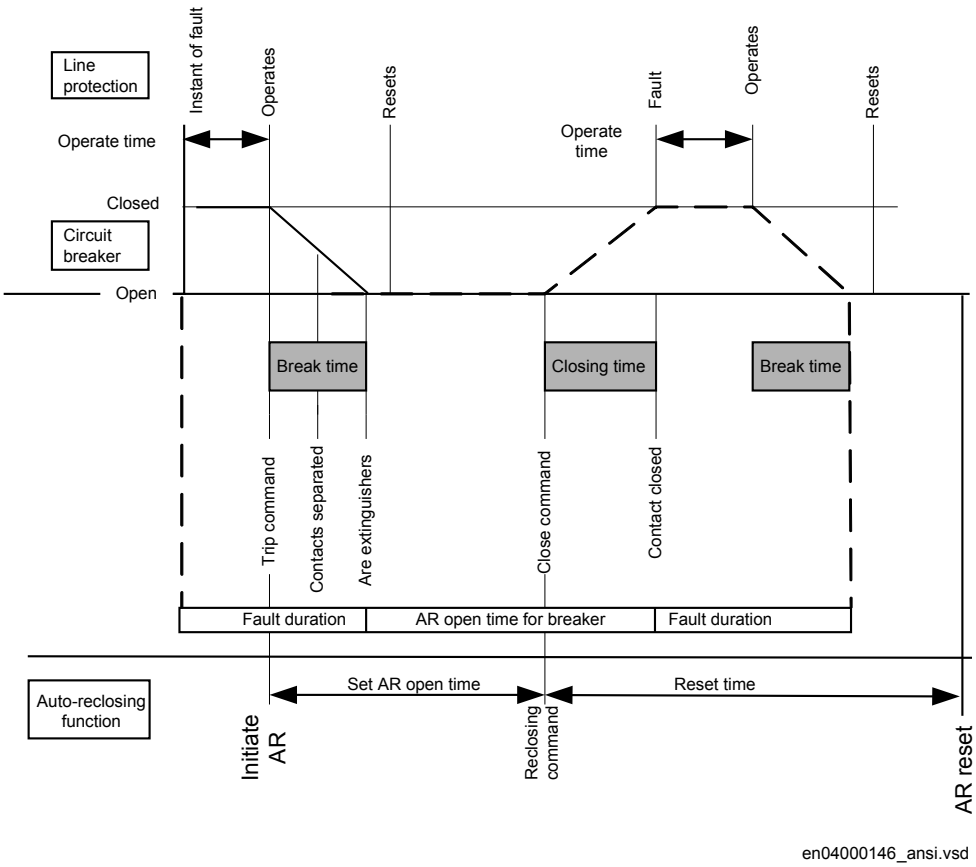

Figure 316: Single-shot automatic reclosing at a permanent fault

Single-pole tripping and single-phase automatic reclosing is a way of limiting the effect of a single-phase line fault on power system operation. Especially at higher voltage levels, the majority of faults are of single-phase type (around 90%). To maintain system stability in power systems with limited meshing or parallel routing single phase auto reclosing is of particular value. During the single phase dead time the system is still capable of transmitting load on the two healthy phases and the system is still synchronized. It requires that each phase breaker operates individually, which is usually the case for higher transmission voltages.

A somewhat longer dead time may be required for single-phase reclosing compared to high-speed three-phase reclosing. This is due to the influence on the fault arc from the voltage and the current in the non-tripped phases.

To maximize the availability of the power system it is possible to choose single pole tripping and automatic reclosing during single-phase faults and three pole tripping and automatic reclosing during multi-phase faults. Three-phase automatic reclosing can be performed with or without the use of a synchronism check, and an energizing check, such as dead line or dead busbar check.

During the single-pole open time there is an equivalent "series"-fault in the system resulting in a flow of zero sequence current. It is therefore necessary to coordinate the residual current protections (ground fault protection) with the single pole tripping and the auto-reclosing function. Attention shall also be paid to “pole discrepancy” that arises when circuit breakers are provided with single pole operating devices. These breakers need pole discrepancy protection. They must also be coordinated with the single pole auto-recloser and blocked during the dead time when a normal discrepancy occurs. Alternatively, they should use a trip time longer than the set single phase dead time.

For the individual line breakers and auto-reclosing equipment, the ”auto-reclosing open time” expression is used. This is the dead time setting for the Auto-Recloser. During simultaneous tripping and reclosing at the two line ends, auto-reclosing open time is approximately equal to the line dead time. Otherwise these two times may differ as one line end might have a slower trip than the other end which means that the line will not be dead until both ends have opened.

If the fault is permanent, the line protection will trip again when reclosing is attempted in order to clear the fault.

It is common to use one automatic reclosing function per line circuit-breaker (CB). When one CB per line end is used, then there is one auto-reclosing function per line end. If auto-reclosing functions are included in duplicated line protection, which means two auto-reclosing functions per CB, one should take measures to avoid uncoordinated reclosing commands. In breaker-and-a-half, double-breaker and ring bus arrangements, two CBs per line end are operated. One auto-reclosing function per CB is recommended. Arranged in such a way, sequential reclosing of the two CBs can be arranged with a priority circuit available in the auto-reclose function. In case of a permanent fault and unsuccessful reclosing of the first CB, reclosing of the second CB is cancelled and thus the stress on the power system is limited. Another advantage with the breaker connected auto-recloser is that checking that the breaker closed before the sequence, breaker prepared for an auto-reclose sequence and so on. is much simpler.

The auto-reclosing function can be selected to perform single-phase and/or three-phase automatic-reclosing from several single-shot to multiple-shot reclosing programs. The three-phase auto-reclosing open time can be set to give either High-Speed Automatic

Reclosing (HSAR) or Delayed Automatic-Reclosing (DAR). These expressions, HSAR and DAR, are mostly used for three-phase Reclosing as single phase is always high speed to avoid maintaining the unsymmetrical condition. HSAR usually means a dead time of less than 1 second.

In power transmission systems it is common practise to apply single and/or three phase, single-shot Auto-Reclosing. In Sub-transmission and Distribution systems tripping and auto-reclosing are usually three-phase. The mode of automatic-reclosing varies however. Single-shot and multi-shot are in use. The first shot can have a short delay, HSAR, or a longer delay, DAR. The second and following reclosing shots have a rather long delay. When multiple shots are used the dead time must harmonize with the breaker duty-cycle capacity.

Automatic-reclosing is usually started by the line protection and in particular by instantaneous tripping of such protection. The auto-reclosing function can be inhibited (blocked) when certain protection functions detecting permanent faults, such as shunt reactor, cable or busbar protection are in operation. Back-up protection zones indicating faults outside the own line are also connected to inhibit the Auto-Reclose.

Automatic-reclosing should not be attempted when closing a CB and energizing a line onto a fault (SOTF), except when multiple-shots are used where shots 2 etc. will be started at SOTF. Likewise a CB in a multi-breaker busbar arrangement which was not closed when a fault occurred should not be closed by operation of the Auto-Reclosing function. Auto-Reclosing is often combined with a release condition from synchronism check and dead line or dead busbar check. In order to limit the stress on turbo-generator sets from Auto-Reclosing onto a permanent fault, one can arrange to combine Auto-Reclosing with a synchronism check on line terminals close to such power stations and attempt energizing from the side furthest away from the power station and perform the synchronism check at the local end if the energizing was successful.

Transmission protection systems are usually sub-divided and provided with two redundant protection IEDs. In such systems it is common to provide auto-reclosing in only one of the sub-systems as the requirement is for fault clearance and a failure to reclose because of the auto-recloser being out of service is not considered a major disturbance. If two auto-reclosers are provided on the same breaker, the application must be carefully checked and normally one must be the master and be connected to inhibit the other auto-recloser if it has started. This inhibit can for example be done from Autorecloser for 3-phase operation(SMBRREC ,79) In progress.

When Single and/or three phase auto-reclosing is considered, there are a number of cases where the tripping shall be three phase anyway. For example:

- Evolving fault where the fault during the dead-time spreads to another phase. The other two phases must then be tripped and a three phase dead-time and auto-reclose initiated
- Permanent fault
- Fault during three phase dead-time
- Auto-reclose out of service or CB not ready for an auto-reclosing cycle

“Prepare three-pole tripping” is then used to switch the tripping to three-pole. This signal is generated by the auto-recloser and connected to the trip function block and also connected outside the IED through IO when a common auto-recloser is provided for two sub-systems. An alternative signal “Prepare 1 Pole tripping” is also provided and can be used as an alternative when the autorecloser is shared with another subsystem. This provides a fail safe connection so that even a failure in the IED with the auto-recloser will mean that the other sub-system will start a three-pole trip.

A permanent fault will cause the line protection to trip again when it recloses in an attempt to energize the line.

The auto-reclosing function allows a number of parameters to be adjusted.

Examples:

- number of auto-reclosing shots
- auto-reclosing program
- auto-reclosing open times (dead time) for each shot

14.2.2.1 Auto-reclosing operation OFF and ON

Operation of the automatic reclosing can be set OFF and ON by a setting parameter and by external control. Parameter *Operation= Disabled*, or *Enabled* sets the function OFF and ON. With the settings *Operation = Enabled* and *ExternalCtrl = Enabled* , the control is made by input signal pulses to the inputs ON and OFF, for example, from the control system or from the binary input (and other systems).

When the function is set ON, the output SETON is set, and it become operative if other conditions such as CB closed and CB Ready are also fulfilled, the output READY is activated (high). When the function is ready to accept a reclosing start.

14.2.2.2 Initiate auto-reclosing and conditions for initiation of a reclosing cycle

The usual way to start a reclosing cycle, or sequence, is to start it at selective tripping by line protection by applying a signal to the input RI. Starting signals can be either, General Trip signals or, only the conditions for Differential, Distance protection Zone 1 and Distance protection Aided trip. In some cases also Directional Ground fault

function Aided trip can be connected to start an Auto-Reclose attempt. If general trip is used to start the auto- recloser it is important to block it from other functions that should not start a reclosing sequence.

In cases where one wants to differentiate three-phase “auto-reclosing open time”, (“dead time”) for different power system configuration or at tripping by different protection stages, one can also use the input RI_HS (Initiate High-Speed Reclosing). When initiating RI_HS, the auto-reclosing open time for three-phase shot 1, *t1 3PhHS* is used and the closing is done without checking the synchrocheck condition.

A number of conditions need to be fulfilled for the start to be accepted and a new auto-reclosing cycle to be started. They are linked to dedicated inputs. The inputs are:

- CBREADY, CB ready for a reclosing cycle, for example, charged operating gear.
- 52a to ensure that the CB was closed when the line fault occurred and start was applied.
- No signal at input INHIBIT that is, no blocking or inhibit signal present. After the start has been accepted, it is latched in and an internal signal “Started” is set. It can be interrupted by certain events, like an “Inhibit” signal.

14.2.2.3 Initiate auto-reclosing from CB open information

If a user wants to initiate auto-reclosing from the "CB open" position instead of from protection trip signals, the function offers such a possibility. This starting mode is selected with the setting parameter *StartByCBOpen=Enabled*. It is then necessary to block reclosing for all manual trip operations. Typically *CBAuxContType=NormClosed* is also set and a CB auxiliary contact of type NC (normally closed, 52b) is connected to inputs 52a and RI. When the signal changes from “CB closed” to “CB open” an auto-reclosing start pulse is generated and latched in the function, subject to the usual checks. Then the reclosing sequence continues as usual. One needs to connect signals from manual tripping and other functions, which shall not be reclosed automatically to the input INHIBIT.

14.2.2.4 Blocking of the autorecloser

Auto-Reclose attempts are expected to take place only for faults on the own line. The Auto-Recloser must be blocked by activating the INHIBIT input for the following conditions:

- Tripping from Delayed Distance protection zones
- Tripping from Back-up protection functions
- Tripping from Breaker failure function
- Intertrip received from remote end Breaker failure function
- Busbar protection tripping

Depending of the starting principle (General Trip or only Instantaneous trip) adopted above the delayed and back-up zones might not be required. Breaker failure trip local and remote must however always be connected.

14.2.2.5 Control of the auto-reclosing open time for shot 1

Up to four different time settings can be used for the first shot, and one extension time. There are separate settings for single-, two- and three-phase auto-reclosing open time, *t1 1Ph, t1 2Ph, t1 3Ph*. If no particular input signal is applied, and an auto-reclosing program with single-phase reclosing is selected, the auto-reclosing open time *t1 1Ph* will be used. If one of the inputs TR2P or TR3P is activated in connection with the start, the auto-reclosing open time for two-phase or three-phase reclosing is used. There is also a separate time setting facility for three-phase high-speed auto-reclosing without Synchrocheck, *t1 3PhHS*, available for use when required. It is activated by the RI_HS input.

An auto-reclosing open time extension delay, *tExtended t1*, can be added to the normal shot 1 delay. It is intended to come into use if the communication channel for permissive line protection is lost. In such a case there can be a significant time difference in fault clearance at the two ends of the line. A longer “auto-reclosing open time” can then be useful. This extension time is controlled by setting parameter *Extended t1=O*n and the input PLCLOST. If this function is used the autorecloser start must also be allowed from distance protection Zone 2 time delayed trip.

14.2.2.6 Long trip signal

In normal circumstances the trip command resets quickly because of fault clearance. The user can set a maximum trip pulse duration *tTrip*.If *Extended t1=Off*, a long trip signal interrupts the reclosing sequence in the same way as a signal to input INHIBIT. If *Extend t1=On* the long trip time inhibit is disabled and *Extend t1* is used instead.

14.2.2.7 Maximum number of reclosing shots

The maximum number of reclosing shots in an auto-reclosing cycle is selected by the setting parameter *NoOfShots*. The type of reclosing used at the first reclosing shot is set by parameter *ARMode*. The first alternative is three-phase reclosing. The other alternatives include some single-phase or two-phase reclosing. Usually there is no two-pole tripping arranged, and then there will be no two-phase reclosing.

The decision for single and 3 phase trip is also made in the tripping logic (SMPTTRC , 94) function block where the setting *3Ph, 1/3Ph (or1/2/3Ph)* is selected.

14.2.2.8 *ARMode=3ph,* (normal setting for a single 3 phase shot)

3-phase reclosing, one to five shots according to setting *NoOfShots*. The output Prepare three-pole trip PREP3P is always set (high). A trip operation is made as a three-pole trip at all types of fault. The reclosing is as a three-phase Reclosing as in mode 1/2/3ph described below. All signals, blockings, inhibits, timers, requirements and so on. are the same as in the example described below.

14.2.2.9 *ARMode= 1/2/3ph*

1-phase, 2-phase or 3-phase reclosing first shot, followed by 3-phase reclosing shots, if selected. Here, the auto-reclosing function is assumed to be "On" and "Ready". The breaker is closed and the operation gear ready (operating energy stored). Input RI (or RI_HS) is received and sealed-in. The output READY is reset (set to false). Output ACTIVE is set.

- If inputs TR2P is low and TR3P is low (1-pole trip): The timer for 1-phase reclosing open time is started and the output 1PT1 (1-phase reclosing in progress) is activated. It can be used to suppress pole disagreement and ground-fault protection trip during the 1-phase open interval.
- If TR2P is high and TR3P is low (2-pole trip): The timer for 2-phase reclosing open time is started and the output 2PT1 (2-phase reclosing in progress) is activated.
- If TR3P is high (3-pole trip): The timer for 3-phase auto-reclosing open time, *t1 3Ph* is started and output 3PT1 (3-phase auto-reclosing shot 1 in progress) is set.
- If STARTHS is high (3-phase trip): The timer for 3-phase auto-reclosing open time, t1 3PhHS is started and output 3PT1 (3-phase auto-reclosing shot 1 in progress) is set.

While any of the auto-reclosing open time timers are running, the output INPROGR is activated. When the "open reset" timer runs out, the respective internal signal is transmitted to the output module for further checks and to issue a closing command to the circuit breaker.

When a CB closing command is issued the output prepare 3-pole trip is set. When issuing a CB closing command a “reset” timer *tReset* is started. If no tripping takes place during that time the auto-reclosing function resets to the “Ready” state and the signal ACTIVE resets. If the first reclosing shot fails, a 3-pole trip will be initiated and 3-phase reclosing can follow, if selected.

14.2.2.10 *ARMode= 1/2ph*, 1-phase or 2-phase reclosing in the first shot.

In 1-pole or 2-pole tripping, the operation is as in the above described example, program mode *1/2/3ph*. If the first reclosing shot fails, a 3-pole trip will be issued and 3-

phase reclosing can follow, if selected. In the event of a 3-pole trip, TR3P high, the auto-reclosing will be blocked and no reclosing takes place.

14.2.2.11 *ARMode*=1ph + 1*2ph, 1-phase or 2-phase reclosing in the first shot

The 1-phase reclosing attempt can be followed by 3-phase reclosing, if selected. A failure of a 2-phase reclosing attempt will block the auto-reclosing. If the first trip is a 3-pole trip the auto-reclosing will be blocked. In the event of a 1-pole trip, (TR2P low and TR3P low), the operation is as in the example described above, program mode *1/2/3ph*. If the first reclosing shot fails, a 3-pole trip will be initiated and 3-phase reclosing can follow, if selected. A maximum of four additional shots can be done (according to the *NoOfShots* parameter). At 2-pole trip (TR2P high and TR3P low), the operation is similar to the above. But, if the first reclosing shot fails, a 3-pole trip will be issued and the auto-reclosing will be blocked. No more shots are attempted! The expression *1*2ph* should be understood as “Just one shot at 2-phase reclosing” During 3-pole trip (TR2P low and TR3P high) the auto-reclosing will be blocked and no reclosing takes place.

14.2.2.12 ARMode=1/2ph + 1*3ph, 1-phase, 2-phase or 3-phase reclosing in the first shot

At 1-phase or 2-phase trip, the operation is as described above. If the first reclosing shot fails, a 3-phase trip will be issued and 3-phase reclosing will follow, if selected. At 3-phase trip, the operation is similar to the above. But, if the first reclosing shot fails, a 3-phase trip command will be issued and the auto-reclosing will be blocked. No more shots take place! 1*3ph should be understood as “Just one shot at 3-phase reclosing”.

14.2.2.13 *ARMode*=1ph + 1*2/3ph, 1-phase, 2-phase or 3-phase reclosing in the first shot

At 1-pole trip, the operation is as described above. If the first reclosing shot fails, a 3-pole trip will be issued and 3-phase reclosing will follow, if selected. At 2-pole or 3-pole trip, the operation is similar as above. But, if the first reclosing shot fails, a 3-pole trip will be issued and the auto-reclosing will be blocked. No more shots take place! “1*2/3ph” should be understood as “Just one shot at 2-phase or 3-phase reclosing”.

Table 44: Type of reclosing shots at different settings of ARMode or integer inputs to MODEINT

MODEINT (integer)	ARMode	Type of fault	1st shot	2nd-5th shot
1	3ph	1ph	3ph	3ph
		2ph	3ph	3ph
		3ph	3ph	3ph
Table continues on next page				

MODEINT (integer)	ARMode	Type of fault	1st shot	2nd-5th shot
2	1/2/3ph	1ph	1ph	3ph
		2ph	2ph	3ph
		3ph	3ph	3ph
3	1/2ph	1ph	1ph	3ph
		2ph	2ph	3ph
		3ph	.....	.....
4	1ph + 1*2ph	1ph	1ph	3ph
		2ph	2ph	.....
		3ph	.....	.....
5	1/2ph + 1*3ph	1ph	1ph	3ph
		2ph	2ph	3ph
		3ph	3ph	.....
6	1ph + 1*2/3ph	1ph	1ph	3ph
		2ph	2ph	.....
		3ph	3ph	.....

A start of a new reclosing cycle is blocked during the set “reset time” after the selected number of reclosing shots have been made.

14.2.2.14 External selection of auto-reclose mode

The auto-reclose mode can be selected by use of the available logic function blocks. Below is an example where the choice of mode is done from a hardware function key in front of the IED with only 3 phase or 1/3 phase mode, but alternatively there can for example, be a physical selector switch on the front of the panel which is connected to a binary to integer function block (BTIGAPC).

The connection example for selection of the auto-reclose mode is shown in Figure .

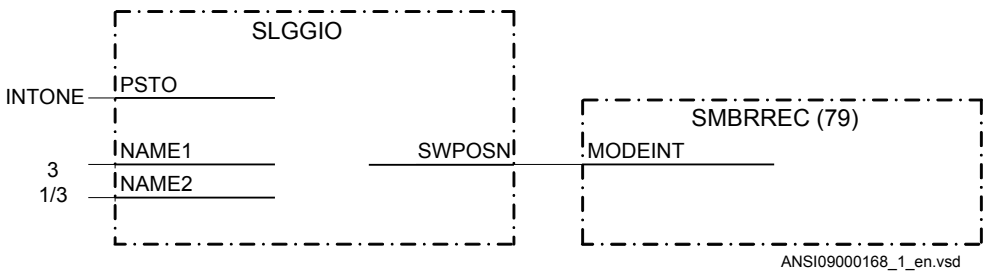

Figure 317: Selection of the auto-reclose mode from a hardware functional key in front of the IED

14.2.2.15 Reclosing reset timer

The reset timer *tReset* defines the time it takes from issue of the reclosing command, until the reclosing function resets. Should a new trip occur during this time, it is treated as a continuation of the first fault. The reclaim timer is started when the CB closing command is given.

14.2.2.16 Pulsing of the CB closing command and Counter

The CB closing command, CLOSECMD is given as a pulse with a duration set by parameter *tPulse*. For circuit-breakers without an anti-pumping function, close pulse cutting can be used. It is selected by parameter *CutPulse=On*. In case of a new trip pulse (start), the closing command pulse is then cut (interrupted). The minimum closing pulse length is always 50 ms. At the issue of the Reclosing command, the appropriate Reclosing operation counter is incremented. There is a counter for each type of Reclosing and one for the total number of Reclosing commands.

14.2.2.17 Transient fault

After the Reclosing command the reset timer keeps running for the set time. If no tripping occurs within this time, *tReset*, the Auto-Reclosing will reset. The CB remains closed and the operating gear recharges. The input signals 52a and CBREADY will be set

14.2.2.18 Permanent fault and reclosing unsuccessful signal

If a new trip occurs, and number of reclosing shots is set to 1, a new input signal RI or TRSOTF appears, after the CB closing command, the output UNSUCCL (unsuccessful closing) is set high. The timer for the first shot can no longer be started. Depending on the set number of Reclosing shots further shots may be made or the Reclosing sequence is ended. After reset timer time-out the Auto-Reclosing function resets, but the CB remains open. The “CB closed” information through the input 52a is missing. Thus, the reclosing function is not ready for a new reclosing cycle.

Normally, the signal UNSUCCL appears when a new trip and start is received after the last reclosing shot has been made and the auto-reclosing function is blocked. The signal resets after reset time. The “unsuccessful” signal can also be made to depend on CB position input. The parameter *UnsucClByCBChk* should then be set to *CBCheck*, and a timer *tUnsucCl* should be set too. If the CB does not respond to the closing command and does not close, but remains open, the output UNSUCCL is set high after time *tUnsucCl*. The Unsuccessful output can for example, be used in Multi-Breaker arrangement to cancel the auto-reclosing function for the second breaker, if the first breaker closed onto a persistent fault. It can also be used to generate a Lock-out of manual closing until the operator has reset the Lock-out, see separate section.

14.2.2.19 Lock-out initiation

In many cases there is a requirement that a Lock-out is generated when the auto-reclosing attempt fails. This is done with logic connected to the in- and outputs of the Autoreclose function and connected to Binary IO as required. Many alternative ways of performing the logic exist depending on whether manual closing is interlocked in the IED, whether an external physical Lock-out relay exists and whether the reset is hardwired, or carried out by means of communication. There are also different alternatives regarding what shall generate Lock-out. Examples of questions are:

- Shall back-up time delayed trip give Lock-out (normally yes)
- Shall Lock-out be generated when closing onto a fault (mostly)
- Shall Lock-out be generated when the Autorecloser was OFF at the fault or for example, in Single phase AR mode and the fault was multi-phase (normally not as no closing attempt has been given)
- Shall Lock-out be generated if the Breaker did not have sufficient operating power for an auto-reclosing sequence (normally not as no closing attempt has been given)

In figures 318 and 319 the logic shows how a closing Lock-out logic can be designed with the Lock-out relay as an external relay alternatively with the Lock-out created internally with the manual closing going through the Synchro-check function. An example of Lock-out logic.

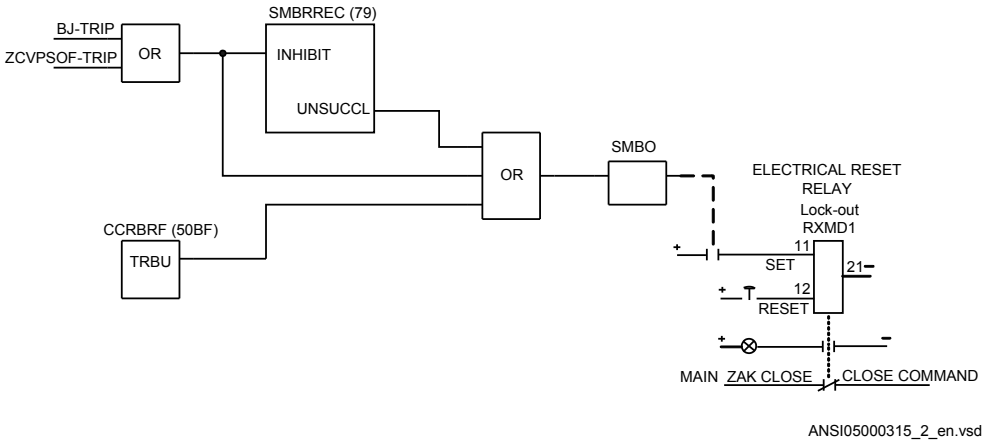

Figure 318: Lock-out arranged with an external Lock-out relay

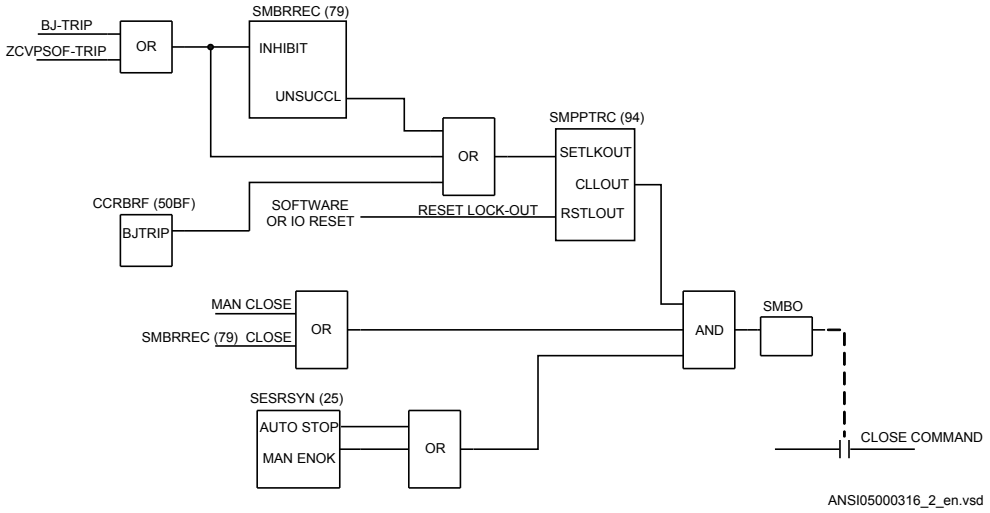

Figure 319: Lock-out arranged with internal logic with manual closing going through in IED

14.2.2.20 Evolving fault

An evolving fault starts as a single-phase fault which leads to single-pole tripping and then the fault spreads to another phase. The second fault is then cleared by three-pole tripping.

The Auto-Reclosing function will first receive a trip and initiate signal (RI) without any three-phase signal (TR3P). The Auto-Reclosing function will start a single-phase reclosing, if programmed to do so. At the evolving fault clearance there will be a new signal RI and three-pole trip information, TR3P. The single-phase reclosing sequence will then be stopped, and instead the timer, *t1 3Ph*, for three-phase reclosing will be started from zero. The sequence will continue as a three-phase reclosing sequence, if it is a selected alternative reclosing mode.

The second fault which can be single phase is tripped three phase because trip module (TR) in the IED has an evolving fault timer which ensures that second fault is always tripped three phase. For other types of relays where the relays do not include this function the output PREP3PH (or the inverted PERMIT1PH) is used to prepare the other sub-system for three pole tripping. This signal will, for evolving fault situations be activated a short time after the first trip has reset and will thus ensure that new trips will be three phase.

14.2.2.21 Automatic continuation of the reclosing sequence

SMBRREC (79) function can be programmed to proceed to the following reclosing shots (if multiple shots are selected) even if start signals are not received from the protection functions, but the breaker is still not closed. This is done by setting parameter *AutoCont* = *Enabled* and *tAutoContWait* to the required delay for the function to proceed without a new start.

14.2.2.22 Thermal overload protection holding the auto-reclosing function back

If the input THOLHOLD (thermal overload protection holding reclosing back) is activated, it will keep the reclosing function on a hold until it is reset. There may thus be a considerable delay between start of Auto-Reclosing and reclosing command to the circuit-breaker. An external logic limiting the time and sending an inhibit to the INHIBIT input can be used. The input can also be used to set the Auto-Reclosing on hold for a longer or shorter period.

14.2.3 Setting guidelines

14.2.3.1 Configuration

Use the PCM600 configuration tool to configure signals.

Autorecloser function parameters are set via the local HMI or Parameter Setting Tool (PST). Parameter Setting Tool is a part of PCM600.

Recommendations for input signals

Please see examples in figure 320, figure 321 and figure 322 of default factory configurations.

ON and OFF

These inputs can be connected to binary inputs or to a communication interface block for external control.

RI

It should be connected to the trip output protection function, which starts the autorecloser for 1/2/3-phase operation (SMBRREC ,79) function. It can also be connected to a binary input for start from an external contact. A logical OR-gate can be used to combine the number of start sources.

If *StartByCBOpen* is used, the CB Open condition shall also be connected to the input RI.

RI_HS, Initiate High-speed auto-reclosing

It may be used when one wants to use two different dead times in different protection trip operations. This input starts the dead time *t1 3PhHS*. High-speed reclosing shot 1 started by this input is without a synchronization check.

INHIBIT

To this input shall be connected signals that interrupt a reclosing cycle or prevent a start from being accepted. Such signals can come from protection for a line connected shunt reactor, from transfer trip receive, from back-up protection functions, busbar protection trip or from breaker failure protection. When the CB open position is set to start SMBRREC(79) , then manual opening must also be connected here. The inhibit is often a combination of signals from external IEDs via the IO and internal functions. An OR gate is then used for the combination.

52a and CBREADY

These should be connected to binary inputs to pick-up information from the CB. The 52a input is interpreted as CB Closed, if parameter *CBAuxContType* is set *NormOpen*, which is the default setting. At three operating gears in the breaker (single pole operated breakers) the connection should be “All poles closed” (series connection of the NO contacts) or “At least one pole open” (parallel connection of NC contacts) if the *CBAuxContType* is set to *NormClosed*. The “CB Ready” is a signal meaning that the CB is ready for a reclosing operation, either Close-Open (CO), or Open-Close-Open (OCO). If the available signal is of type “CB not charged” or “not ready”, an inverter can be inserted in front of the CBREADY input.

SYNC

This is connected to the internal synchronism check function when required. It can also be connected to a binary input for synchronization from an external device. If neither internal nor external synchronism or energizing check is required, it can be connected to a permanently high source, TRUE. The signal is required for three phase shots 1-5 to proceed (Note! Not the HS step).

PLCLOST

This is intended for line protection permissive signal channel lost (fail) for example, PLC= Power Line Carrier fail. It can be connected, when required to prolong the AutoReclosing time when communication is not working, that is, one line end might trip with a zone 2 delay. If this is used the autorecloser must also be started from Zone2 time delayed trip.

TRSOTF

This is the signal “Trip by Switch Onto Fault”. It is usually connected to the “switch onto fault” output of line protection if multi-shot Auto-Reclose attempts are used. The input will start the shots 2-5.

THOLHOLD

Signal “Thermal overload protection holding back Auto-Reclosing”. It can be connected to a thermal overload protection trip signal which resets only when the thermal content has fallen to an acceptable level, for example, 70%. As long as the signal is high, indicating that the line is hot, the Auto-Reclosing is held back. When the signal resets, a reclosing cycle will continue. Please observe that this have a considerable delay. Input can also be used for other purposes if for some reason the Auto-Reclose shot need to be halted.

TR2P and TR3P

Signals for two-pole and three-pole trip. They are usually connected to the corresponding output of the TRIP block. They control the choice of dead time and the reclosing cycle according to the selected program. Signal TR2P needs to be connected only if the trip has been selected to give 1/2/3 pole trip and an auto reclosing cycle with two phase reclosing is foreseen.

WAIT

Used to hold back reclosing of the “low priority unit” during sequential reclosing. See “Recommendation for multi-breaker arrangement” below. The signal is activated from output WFMASTER on the second breaker Auto-Recloser in multi-breaker arrangements.

BLKON

Used to block the autorecloser for 3-phase operation (SMBRREC ,79) function for example, when certain special service conditions arise. When used, blocking must be reset with BLOCKOFF.

BLOCKOFF

Used to Unblock SMBRREC (79) function when it has gone to Block due to activating input BLKON or by an unsuccessful Auto-Reclose attempt if the setting*BlockByUnsucCl* is set to *Enabled*.

RESET

Used to Reset SMBRREC (79) to start condition. Possible Thermal overload Hold will be reset. Positions, setting On-Off. will be started and checked with set times.

Recommendations for output signals

Please see figure 320, figure 321 and figure 322 and default factory configuration for examples.

SETON

Indicates that Autorecloser for 1/2/3-phase operation (SMBRREC ,79) function is switched on and operative.

BLOCKED

Indicates that SMRREC (79) function is temporarily or permanently blocked.

ACTIVE

Indicates that SMBRREC (79) is active, from start until end of Reset time.

INPROGR

Indicates that a sequence is in progress, from start until reclosing command.

UNSUCCL

Indicates unsuccessful reclosing.

CLOSECMD

Connect to a binary output for circuit-breaker closing command.

READY

Indicates that SMBRREC (79) function is ready for a new and complete reclosing sequence. It can be connected to the zone extension if a line protection should extended zone reach before automatic reclosing.

1PT1 and 2PT1

Indicates that single-phase or two-phase automatic reclosing is in progress. It is used to temporarily block an ground-fault and/or pole disagreement function during the single-phase or two-phase open interval.

3PT1, 3PT2, 3PT3, 3PT4 and 3PT5

Indicates that three-phase automatic reclosing shots 1-5 are in progress. The signals can be used as an indication of progress or for own logic.

PREP3P

Prepare three-pole trip is usually connected to the trip block to force a coming trip to be a three-phase one. If the function cannot make a single-phase or two-phase reclosing, the tripping should be three-pole.

PERMIT1P

Permit single-pole trip is the inverse of PREP3P. It can be connected to a binary output relay for connection to external protection or trip relays. In case of a total loss of auxiliary power, the output relay drops and does not allow single-pole trip.

WFMASTER

Wait from master is used in high priority units to hold back reclosing of the low priority unit during sequential reclosing. Refer to the recommendation for multi-breaker arrangements in figure 322.

Other outputs

The other outputs can be connected for indication, disturbance recording, as required.

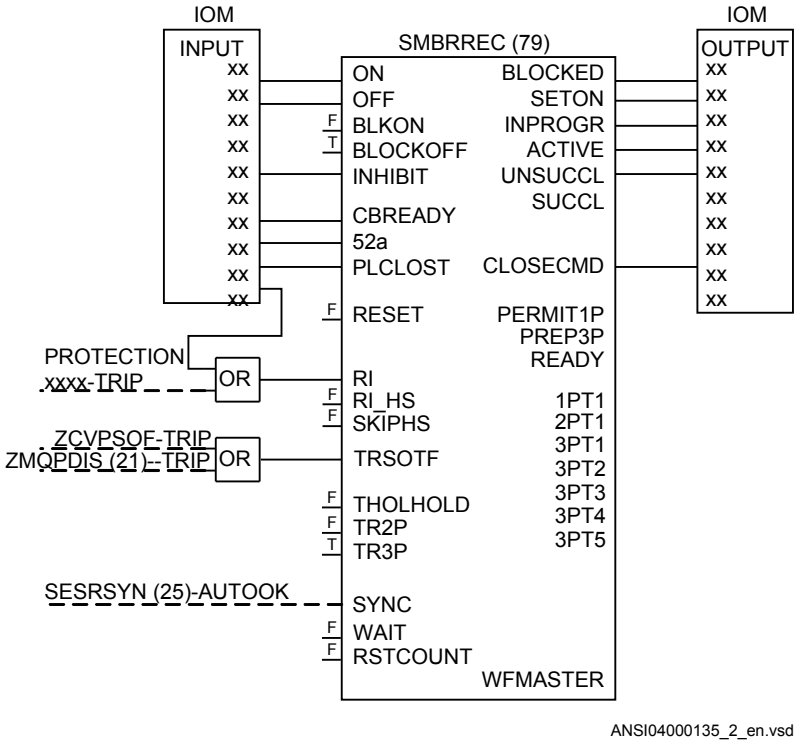

Figure 320: Example of I/O-signal connections at a three-phase reclosing function

Setting recommendations for multi-breaker arrangements

Sequential reclosing in multi-breaker arrangements, like breaker-and-a-half, double breaker and ring bus, is achieved by giving the two line breakers different priorities. Please refer to figure 322. In a single breaker arrangement the setting is *Priority = None*. In a multi-breaker arrangement the setting for the first CB, the Master, is *Priority = High* and for the other CB *Priority = Low*.

While the reclosing of the master is in progress, it issues the signal WFMASTER. A reset delay of one second ensures that the WAIT signal is kept high for the duration of the breaker closing time. After an unsuccessful reclosing it is also maintained by the signal UNSUCCL. In the slave unit, the signal WAIT holds back a reclosing operation. When the WAIT signal is reset at the time of a successful reclosing of the first CB, the slave unit is released to continue the reclosing sequence. A parameter *tWait* sets a maximum waiting time for the reset of the WAIT. At time-out it interrupts the reclosing cycle of the slave unit. If reclosing of the first breaker is unsuccessful, the output signal UNSUCCL connected to the input INHIBIT of the slave unit interrupts the reclosing sequence of the latter.

The signals can be cross-connected to allow simple changing of the priority by just setting the *High* and the *Low* priorities without changing the configuration. The inputs 52a for each breaker are important in multi breaker arrangements to ensure that the CB was closed at the beginning of the cycle. If the High priority breaker is not closed the High priority moves to the low priority breaker.

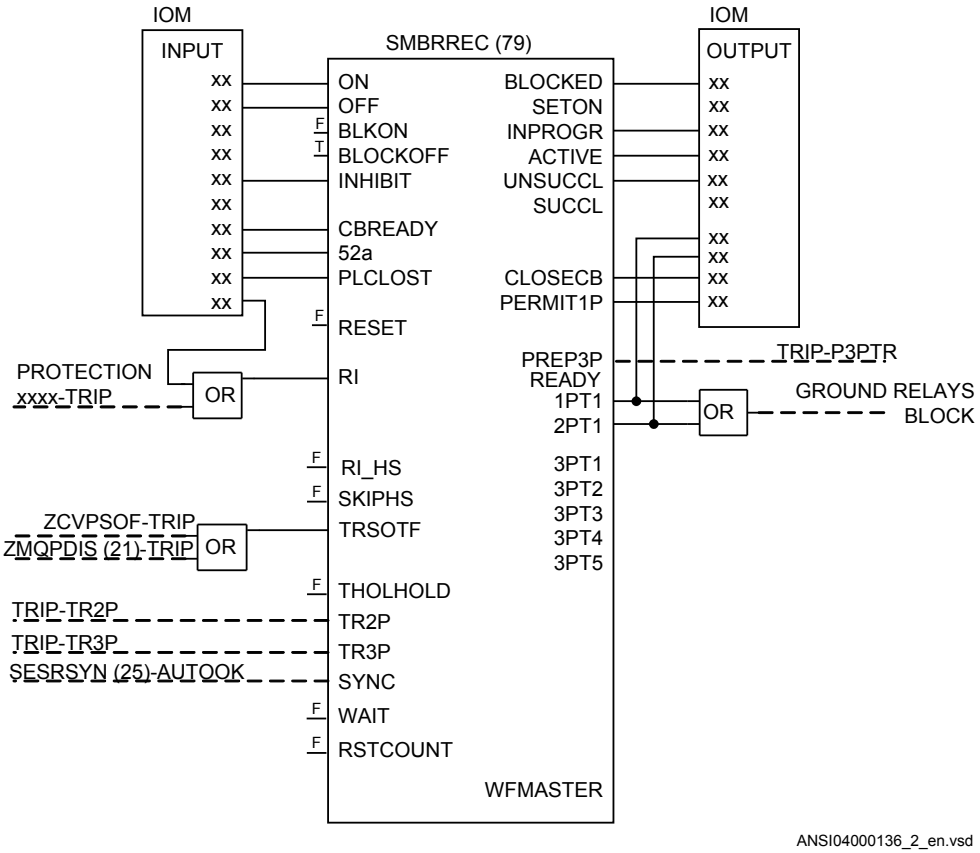

Figure 321: Example of I/O-signal connections in a single-phase, two-phase or three-phase reclosing function

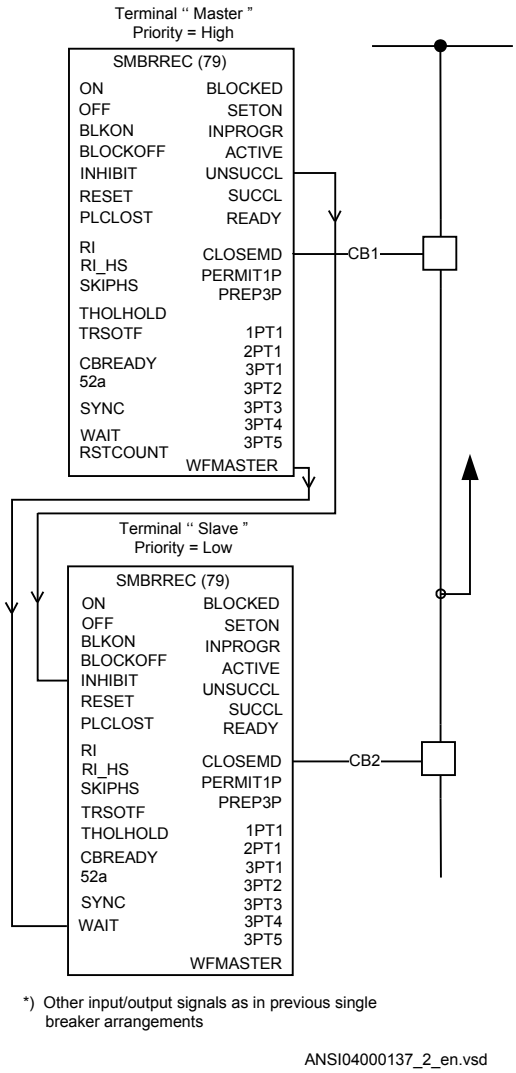

Figure 322: Additional input and output signals at multi-breaker arrangement. The connections can be made "symmetrical" to make it possible to control the priority by the settings, Priority:High/Low

14.2.3.2 Auto-recloser parameter settings

The operation of the Autorecloser for 1/2/3-phase operation (SMBRREC ,79) function can be switched *Enabled* and *Disabled*. The setting makes it possible to switch it *Enabled* or *Disabled* using an external switch via IO or communication ports.

, Number of reclosing shots

In power transmission 1 shot is mostly used. In most cases one reclosing shot is sufficient as the majority of arcing faults will cease after the first reclosing shot. In power systems with many other types of faults caused by other phenomena, for example wind, a greater number of reclose attempts (shots) can be motivated.

First shot and reclosing program

There are six different possibilities in the selection of reclosing programs. The type of reclosing used for different kinds of faults depends on the power system configuration and the users practices and preferences. When the circuit-breakers only have three-phase operation, then three-phase reclosing has to be chosen. This is usually the case in subtransmission and distribution lines. Three-pole tripping and reclosing for all types of faults is also widely accepted in completely meshed power systems. In transmission systems with few parallel circuits, single-phase reclosing for single-phase faults is an attractive alternative for maintaining service and system stability.

Auto-reclosing open times, dead times

Single-phase auto-reclosing time: A typical setting is *t1 1Ph = 800ms*. Due to the influence of energized phases the arc extinction may not be instantaneous. In long lines with high voltage the use of shunt reactors in the form of a WYE with a neutral reactor improves the arc extinction.

Three-phase shot 1 delay: For three-phase High-Speed Auto-Reclosing (HSAR) a typical open time is 400ms. Different local phenomena, such as moisture, salt, pollution, can influence the required dead time. Some users apply Delayed Auto-Reclosing (DAR) with delays of 10s or more. The delay of reclosing shot 2 and possible later shots are usually set at 30s or more. A check that the CB duty cycle can manage the selected setting must be done. The setting can in some cases be restricted by national regulations. For multiple shots the setting of shots 2-5 must be longer than the circuit breaker duty cycle time.

and , Extended auto-reclosing open time for shot 1.

The communication link in a permissive (not strict) line protection scheme, for instance a power line carrier (PLC) link, may not always be available. If lost, it can result in delayed tripping at one end of a line. There is a possibility to extend the auto-reclosing open time in such a case by use of an input to PLCLOST, and the setting parameters. Typical setting in such a case: *Extended t1 = On* and *tExtended t1 = 0.8 s*.

tSync, Maximum wait time for synchronismcheck

The time window should be coordinated with the operate time and other settings of the synchronism check function. Attention should also be paid to the possibility of a power swing when reclosing after a line fault. Too short a time may prevent a potentially successful reclosing.

tTrip, Long trip pulse

Usually the trip command and initiate auto-reclosing signal reset quickly as the fault is cleared. A prolonged trip command may depend on a CB failing to clear the fault. A trip signal present when the CB is reclosed will result in a new trip. Depending on the setting *Extended t1 = Off* or On a trip/initiate pulse longer than the *set time tTrip* will either block the reclosing or extend the auto-reclosing open time. A trip pulse longer than the set time *tTrip* will inhibit the reclosing. At a setting somewhat longer than the auto-reclosing open time, this facility will not influence the reclosing. A typical setting of *tTrip* could be close to the auto-reclosing open time.

tInhibit, Inhibit resetting delay

A typical setting is *tInhibit = 5.0 s* to ensure reliable interruption and temporary blocking of the function. Function will be blocked during this time after the *tinhibit* has been activated.

tReset, Reset time

The Reset time sets the time for resetting the function to its original state, after which a line fault and tripping will be treated as an independent new case with a new reclosing cycle. One may consider a nominal CB duty cycle of for instance, O-0.3sec CO- 3 min. – CO. However the 3 minute (180 s) recovery time is usually not critical as fault levels are mostly lower than rated value and the risk of a new fault within a short time is negligible. A typical time may be *tReset = 60 or 180 s* dependent of the fault level and breaker duty cycle.

StartByCBOpen

The normal setting is *Disabled*. It is used when the function is started by protection trip signals. If set *On* the start of the autorecloser is controlled by an CB auxiliary contact.

FollowCB

The usual setting is *Follow CB = Disabled*. The setting *Enabled* can be used for delayed reclosing with long delay, to cover the case when a CB is being manually closed during the “auto-reclosing open time” before the auto-reclosing function has issued its CB closing command.

tCBClosedMin

A typical setting is 5.0 s. If the CB has not been closed for at least this minimum time, a reclosing start will not be accepted.

CBAuxContType, CB auxiliary contact type

It shall be set to correspond to the CB auxiliary contact used. A *NormOpen* contact is recommended in order to generate a positive signal when the CB is in the closed position.

CBReadyType, Type of CB ready signal connected

The selection depends on the type of performance available from the CB operating gear. At setting *OCO* (CB ready for an Open – Close – Open cycle), the condition is checked only at the start of the reclosing cycle. The signal will disappear after tripping, but the CB will still be able to perform the C-O sequence. For the selection *CO* (CB ready for a Close – Open cycle) the condition is also checked after the set auto-reclosing dead time. This selection has a value first of all at multi-shot reclosing to ensure that the CB is ready for a C-O sequence at shot 2 and further shots. During single-shot reclosing, the *OCO* selection can be used. A breaker shall according to its duty cycle always have storing energy for a CO operation after the first trip. (IEC 56 duty cycle is O-0.3sec CO-3minCO).

tPulse, Breaker closing command pulse duration

The pulse should be long enough to ensure reliable operation of the CB. A typical setting may be *tPulse=200 ms*. A longer pulse setting may facilitate dynamic indication at testing, for example, in “Debug” mode of Application Configuration tool (ACT). In CBs without anti-pumping relays, the setting *CutPulse = Enabled* can be used to avoid repeated closing operation when reclosing onto a fault. A new initiation will then cut the ongoing pulse.

BlockByUnsucCl

Setting of whether an unsuccessful auto-reclose attempt shall set the Auto-Reclose in block. If used the inputs BLOCKOFF must be configured to unblock the function after an unsuccessful Reclosing attempt. Normal setting is *Disabled*.

UnsucClByCBCheck, Unsuccessful closing by CB check

The normal setting is *NoCBCheck*. The “auto-reclosing unsuccessful” event is then decided by a new trip within the reset time after the last reclosing shot. If one wants to get the UNSUCCL (Unsuccessful closing) signal in the case the CB does not respond to the closing command, CLOSECMD, one can set *UnsucClByCBCheck= CB Check* and set *tUnsucCl* for instance to 1.0 s.

Priority and time *tWaitForMaster*

In single CB applications, one sets *Priority = None*. At sequential reclosing the function of the first CB, e.g. near the busbar, is set *Priority = High* and for the second CB *Priority = Low*. The maximum waiting time, *tWaitForMaster* of the second CB is set longer than the “auto-reclosing open time” and a margin for synchronism check at the first CB. Typical setting is *tWaitForMaster=2sec*.

AutoCont and *tAutoContWait*, Automatic continuation to the next shot if the CB is not closed within the set time

The normal setting is *AutoCont = Disabled*. The *tAutoContWait* is the length of time SMBRREC (79) waits to see if the breaker is closed when *AutoCont* is set to *Enabled*. Normally, the setting can be *tAutoContWait = 2 sec*.

14.3 Apparatus control APC

14.3.1 Application

The apparatus control is a function for control and supervising of circuit breakers, disconnectors, and grounding switches within a bay. Permission to operate is given after evaluation of conditions from other functions such as interlocking, synchronism check, operator place selection and external or internal blockings.

Figure 323 gives an overview from what places the apparatus control function receive commands. Commands to an apparatus can be initiated from the Control Centre (CC), the station HMI or the local HMI on the IED front.

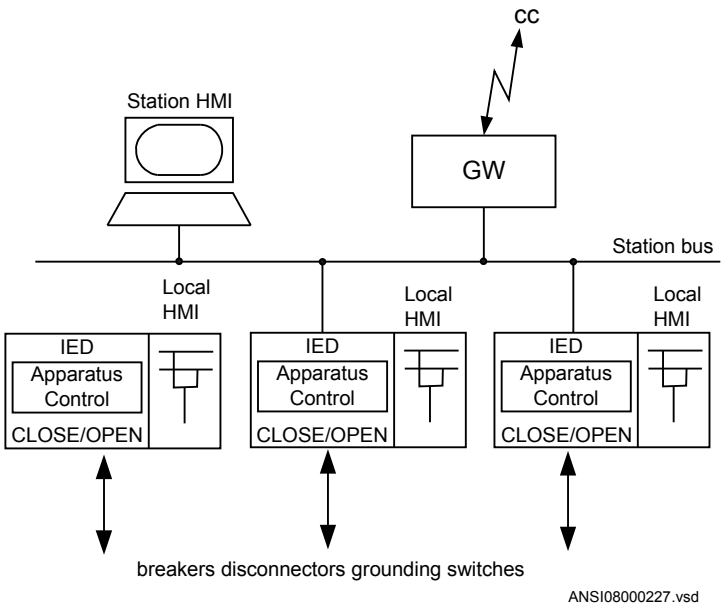

Figure 323: Overview of the apparatus control functions

Features in the apparatus control function:

- Operation of primary apparatuses
- Select-Execute principle to give high security
- Selection and reservation function to prevent simultaneous operation
- Selection and supervision of operator place
- Command supervision
- Block/deblock of operation
- Block/deblock of updating of position indications
- Substitution of position indications
- Overriding of interlocking functions
- Overriding of synchronism check
- Pole discrepancy supervision
- Operation counter
- Suppression of mid position

The apparatus control function is realized by means of a number of function blocks designated:

- Switch controller SCSWI
- Circuit breaker SXCBR
- Circuit switch SXSWI
- Bay control QCBAY
- Position evaluation POS_EVAL
- Bay reserve QCRSV
- Reservation input RESIN
- Local remote LOCREM
- Local remote control LOCREMCTRL

The signal flow between the function blocks is shown in Figure 324. To realize the reservation function, the function blocks Reservation input (RESIN) and Bay reserve (QCRSV) also are included in the apparatus control function. The application description for all these functions can be found below. The function SCILO in the Figure below is the logical node for interlocking.

Control operation can be performed from the local IED HMI. If the administrator has defined users with the IED Users tool in PCM600, then the local/remote switch is under authority control. If not, the default (factory) user is the SuperUser that can perform control operations from the local IED HMI without LogOn. The default position of the local/remote switch is on remote.

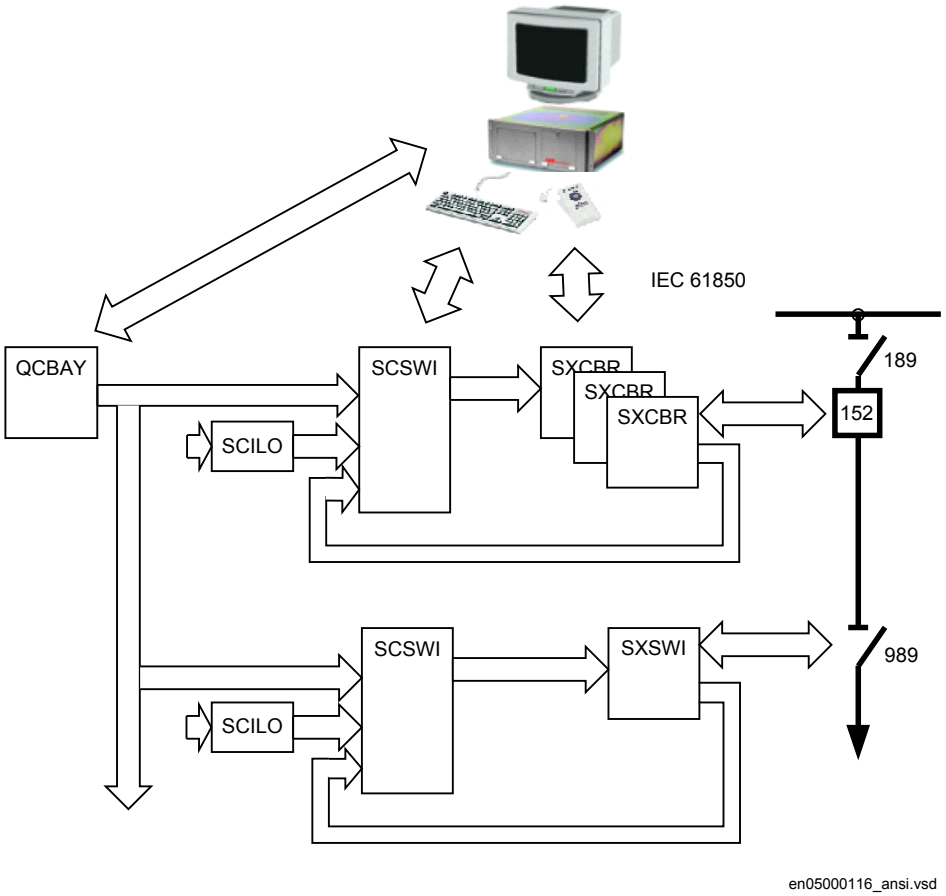

Figure 324: Signal flow between apparatus control function blocks

Accepted originator categories for PSTO

If the requested command is accepted by the authority, the value will change. Otherwise the attribute *blocked-by-switching-hierarchy* is set in the *cause* signal. If the PSTO value is changed during a command, then the command is aborted.

The accepted originator categories for each PSTO value are shown in Table 45

Table 45: Accepted originator categories for each PSTO

Permitted Source To Operate	Originator (orCat)
0 = Off	4,5,6
1 = Local	1,4,5,6
2 = Remote	2,3,4,5,6
3 = Faulty	4,5,6
Table continues on next page	

4 = Not in use	4,5,6
5 = All	1,2,3,4,5,6
6 = Station	2,4,5,6
7 = Remote	3,4,5,6

PSTO = All, then it is no priority between operator places. All operator places are allowed to operate.

According to IEC61850 standard the *orCat* attribute in originator category are defined in Table 46

Table 46: orCat attribute according to IEC61850

Value	Description
0	not-supported
1	bay-control
2	station-control
3	remote-control
4	automatic-bay
5	automatic-station
6	automatic-remote
7	maintenance
8	process

14.3.1.1 Bay control (QCBAY)

The Bay control (QCBAY) is used to handle the selection of the operator place per bay. The function gives permission to operate from two main types of locations either from Remote (for example, control centre or station HMI) or from Local (local HMI on the IED) or from all (Local and Remote). The Local/Remote switch position can also be set to Off, which means no operator place selected that is, operation is not possible either from local or from remote.

For IEC 61850-8-1 communication, the Bay Control function can be set to discriminate between commands with orCat station and remote (2 and 3). The selection is then done through the IEC61850-8-1 edition 2 command LocSta.

QCBAY also provides blocking functions that can be distributed to different apparatuses within the bay. There are two different blocking alternatives:

- Blocking of update of positions
- Blocking of commands

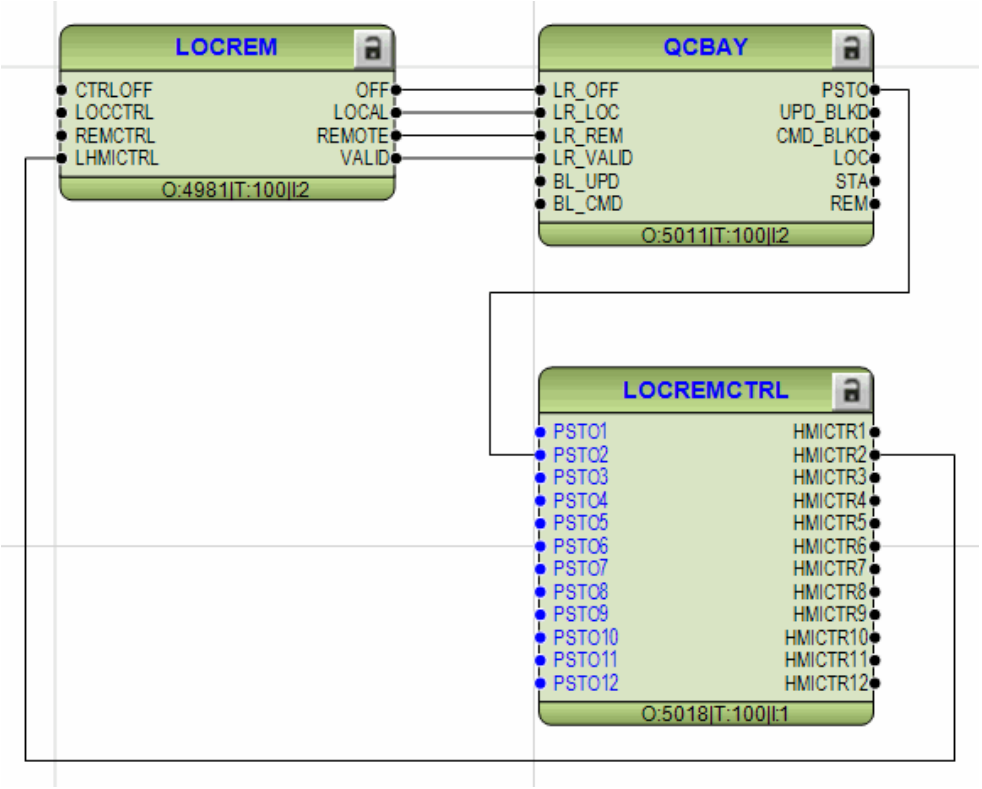

Figure 325: APC - Local remote function block

14.3.1.2 Switch controller (SCSWI)

SCSWI may handle and operate on one three-phase device or three one-phase switching devices.

After the selection of an apparatus and before the execution, the switch controller performs the following checks and actions:

- A request initiates to reserve other bays to prevent simultaneous operation.
- Actual position inputs for interlocking information are read and evaluated if the operation is permitted.
- The synchronism check/synchronizing conditions are read and checked, and performs operation upon positive response.
- The blocking conditions are evaluated
- The position indications are evaluated according to given command and its requested direction (open or closed).

The command sequence is supervised regarding the time between:

- Select and execute.
- Select and until the reservation is granted.
- Execute and the final end position of the apparatus.
- Execute and valid close conditions from the synchronism check.

At error the command sequence is cancelled.

In the case when there are three one-phase switches (SXCBR) connected to the switch controller function, the switch controller will "merge" the position of the three switches to the resulting three-phase position. In case of a pole discrepancy situation, that is, the positions of the one-phase switches are not equal for a time longer than a settable time; an error signal will be given.

The switch controller is not dependent on the type of switching device SXCBR or SXSWI. The switch controller represents the content of the SCSWI logical node (according to IEC 61850) with mandatory functionality.

14.3.1.3 Switches (SXCBR/SXSWI)

Switches are functions used to close and interrupt an ac power circuit under normal conditions, or to interrupt the circuit under fault, or emergency conditions. The intention with these functions is to represent the lowest level of a power-switching device with or without short circuit breaking capability, for example, circuit breakers, disconnectors, grounding switches etc.

The purpose of these functions is to provide the actual status of positions and to perform the control operations, that is, pass all the commands to the primary apparatus via output boards and to supervise the switching operation and position.

Switches have the following functionalities:

- Local/Remote switch intended for the switchyard
- Block/deblock for open/close command respectively
- Update block/deblock of position indication
- Substitution of position indication

- Supervision timer that the primary device starts moving after a command
- Supervision of allowed time for intermediate position
- Definition of pulse duration for open/close command respectively

The realizations of these function are done with SXCBR representing a circuit breaker and with SXSWI representing a circuit switch that is, a disconnector or an grounding switch.

Circuit breaker (SXCBR) can be realized either as three one-phase switches or as one three-phase switch.

The content of this function is represented by the IEC 61850 definitions for the logical nodes Circuit breaker (SXCBR) and Circuit switch (SXSWI) with mandatory functionality.

14.3.1.4 Reservation function (QCRSV and RESIN)

The purpose of the reservation function is primarily to transfer interlocking information between IEDs in a safe way and to prevent double operation in a bay, switchyard part, or complete substation.

For interlocking evaluation in a substation, the position information from switching devices, such as circuit breakers, disconnectors and grounding switches can be required from the same bay or from several other bays. When information is needed from other bays, it is exchanged over the station bus between the distributed IEDs. The problem that arises, even at a high speed of communication, is a space of time during which the information about the position of the switching devices are uncertain. The interlocking function uses this information for evaluation, which means that also the interlocking conditions are uncertain.

To ensure that the interlocking information is correct at the time of operation, a unique reservation method is available in the IEDs. With this reservation method, the bay that wants the reservation sends a reservation request to other bays and then waits for a reservation granted signal from the other bays. Actual position indications from these bays are then transferred over the station bus for evaluation in the IED. After the evaluation the operation can be executed with high security.

This functionality is realized over the station bus by means of the function blocks QCRSV and RESIN. The application principle is shown in Figure 326.

The function block QCRSV handles the reservation. It sends out either the reservation request to other bays or the acknowledgement if the bay has received a request from another bay.

The other function block RESIN receives the reservation information from other bays. The number of instances is the same as the number of involved bays (up to 60

instances are available). The received signals are either the request for reservation from another bay or the acknowledgment from each bay respectively, which have received a request from this bay. Also the information of valid transmission over the station bus must be received.

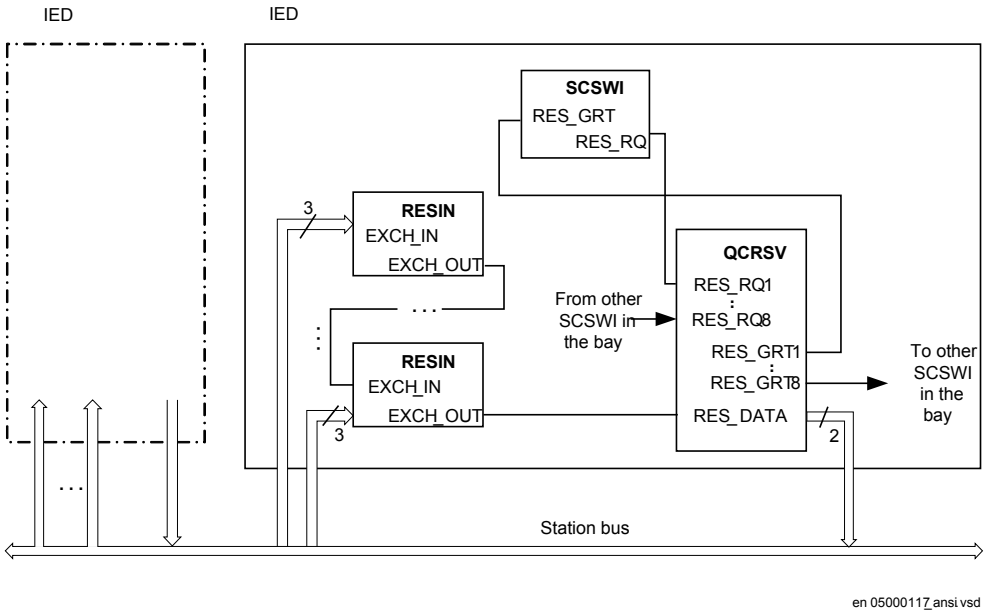

Figure 326: Application principles for reservation over the station bus

The reservation can also be realized with external wiring according to the application example in Figure 327. This solution is realized with external auxiliary relays and extra binary inputs and outputs in each IED, but without use of function blocks QCRSV and RESIN.

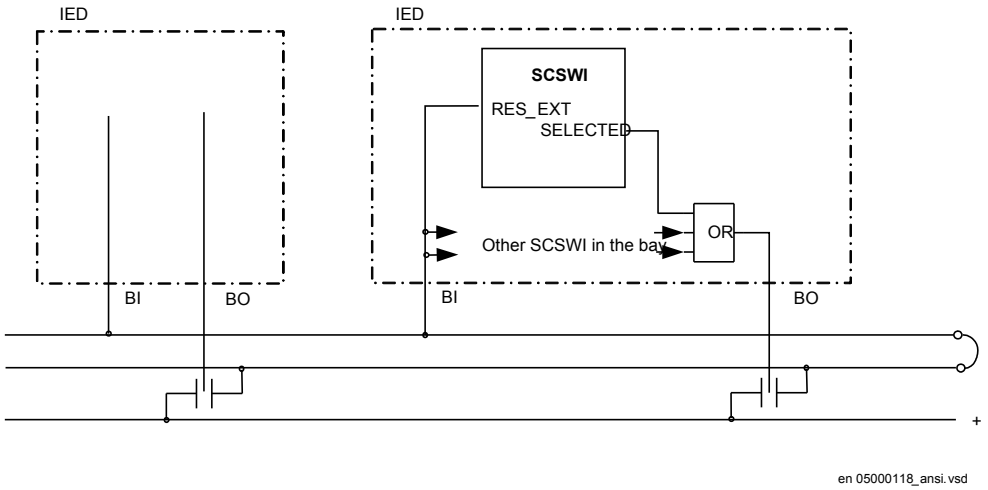

Figure 327: Application principles for reservation with external wiring

The solution in Figure 327 can also be realized over the station bus according to the application example in Figure 328. The solutions in Figure 327 and Figure 328 do not have the same high security compared to the solution in Figure 326, but instead have a higher availability, since no acknowledgment is required.

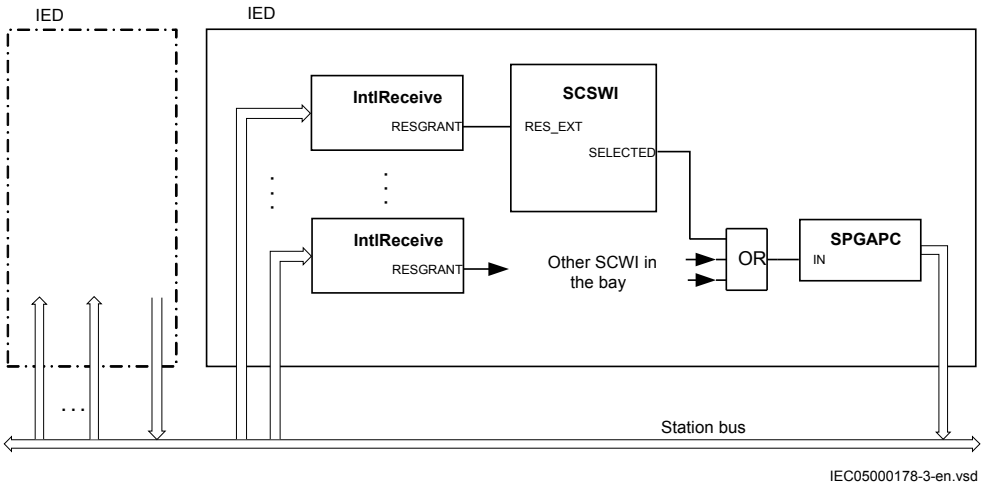

Figure 328: Application principle for an alternative reservation solution

14.3.2 Interaction between modules

A typical bay with apparatus control function consists of a combination of logical nodes or functions that are described here:

- The Switch controller (SCSWI) initializes all operations for one apparatus. It is the command interface of the apparatus. It includes the position reporting as well as the control of the position
- The Circuit breaker (SXCBR) is the process interface to the circuit breaker for the apparatus control function.
- The Circuit switch (SXSWI) is the process interface to the disconnector or the grounding switch for the apparatus control function.
- The Bay control (QCBAY) fulfils the bay-level functions for the apparatuses, such as operator place selection and blockings for the complete bay.
- The Reservation (QCRSV) deals with the reservation function.
- The Protection trip logic (SMPPTRC, 94) connects the "trip" outputs of one or more protection functions to a common "trip" to be transmitted to SXCBR.
- The Autorecloser (SMBRREC, 79) consists of the facilities to automatically close a tripped breaker with respect to a number of configurable conditions.
- The logical node Interlocking (SCILO, 3) provides the information to SCSWI whether it is permitted to operate due to the switchyard topology. The interlocking conditions are evaluated with separate logic and connected to SCILO (3).
- The Synchronism, energizing check, and synchronizing (SESRSYN, 25) calculates and compares the voltage phasor difference from both sides of an open breaker with predefined switching conditions (synchronism check). Also the case that one side is dead (energizing-check) is included.
- The Generic Automatic Process Control function, GAPC, handles generic commands from the operator to the system.

The overview of the interaction between these functions is shown in Figure 329 below.

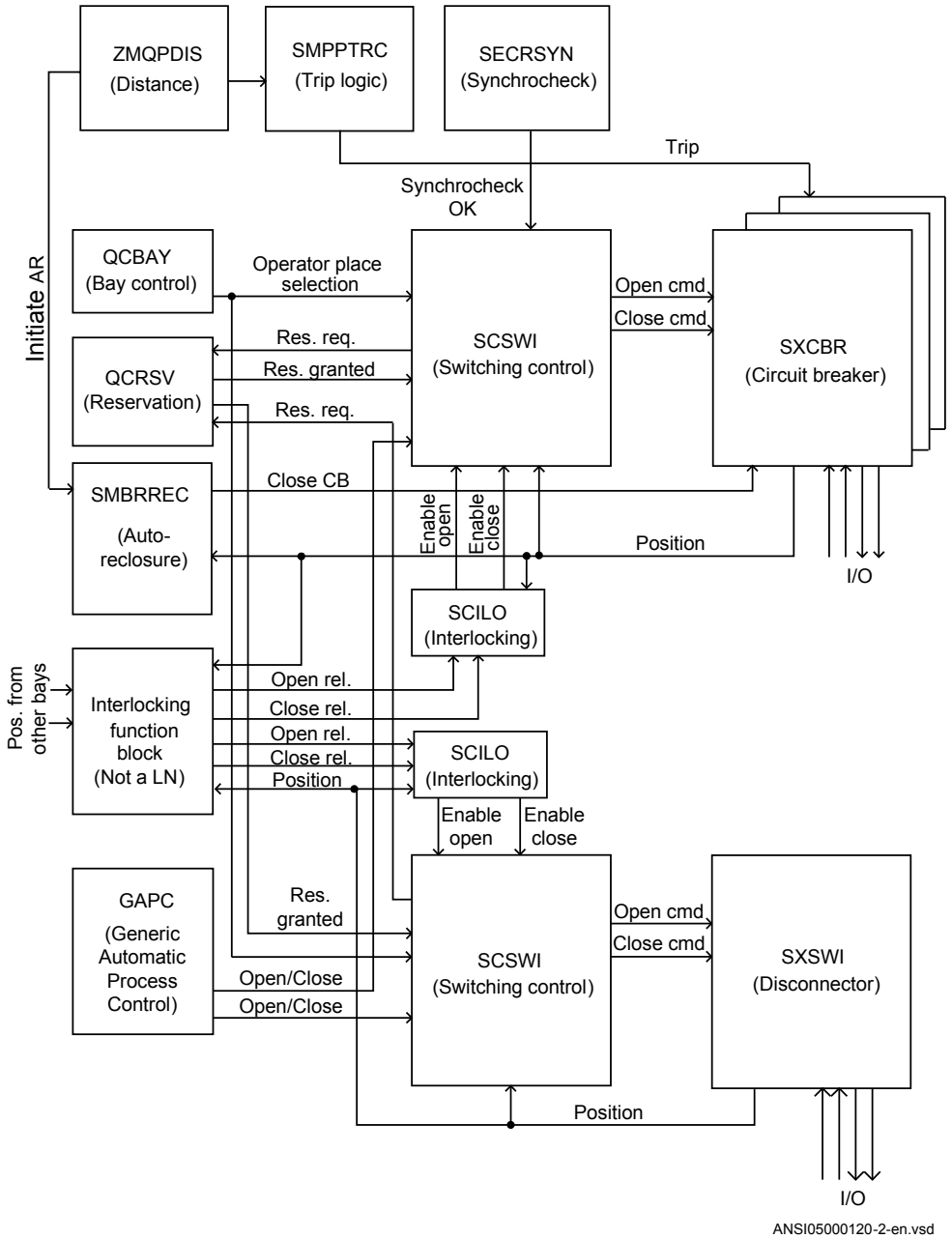

Figure 329: Example overview of the interactions between functions in a typical bay

14.3.3 Setting guidelines

The setting parameters for the apparatus control function are set via the local HMI or PCM600.

14.3.3.1 Bay control (QCBAY)

If the parameter *AllPSTOValid* is set to *No priority*, all originators from local and remote are accepted without any priority.

If the parameter *RemoteIncStation* is set to *Yes*, commands from IEC61850-8-1 clients at both station and remote level are accepted, when the QCBAY function is in Remote. If set to *No*, the command LocSta controls which operator place is accepted when QCBAY is in Remote. If LocSta is true, only commands from station level are accepted, otherwise only commands from remote level are accepted.

The parameter *RemoteIncStation* has only effect on the IEC61850-8-1 communication. Further, when using IEC61850 edition 1 communication, the parameter should be set to *Yes*, since the command LocSta is not defined in IEC61850-8-1 edition 1.

14.3.3.2 Switch controller (SCSWI)

The parameter *CtlModel* specifies the type of control model according to IEC 61850. The default for control of circuit breakers, disconnectors and grounding switches the control model is set to *SBO Enh* (Select-Before-Operate) with enhanced security.

When the operation shall be performed in one step, and no monitoring of the result of the command is desired, the model direct control with normal security is used.

At control with enhanced security there is an additional supervision of the status value by the control object, which means that each command sequence must be terminated by a termination command.

The parameter *PosDependent* gives permission to operate depending on the position indication, that is, at *Always permitted* it is always permitted to operate independent of the value of the position. At *Not perm at 00/11* it is not permitted to operate if the position is in bad or intermediate state.

tSelect is the maximum allowed time between the select and the execute command signal, that is, the time the operator has to perform the command execution after the selection of the object to operate. When the time has expired, the selected output signal is set to false and a cause-code is given.

The time parameter *tResResponse* is the allowed time from reservation request to the feedback reservation granted from all bays involved in the reservation function. When the time has expired, the control function is reset, and a cause-code is given.

tSynchrocheck is the allowed time for the synchronism check function to fulfill the close conditions. When the time has expired, the function tries to start the

synchronizing function. If *tSynchrocheck* is set to *0*, no synchrocheck is done, before starting the synchronizing function.

The timer *tSynchronizing* supervises that the signal synchronizing in progress is obtained in SCSWI after start of the synchronizing function. The start signal for the synchronizing is set if the synchronism check conditions are not fulfilled. When the time has expired, the control function is reset, and a cause-code is given. If no synchronizing function is included, the time is set to *0*, which means no start of the synchronizing function is done, and when *tSynchrocheck* has expired, the control function is reset and a cause-code is given.

tExecutionFB is the maximum time between the execute command signal and the command termination. When the time has expired, the control function is reset and a cause-code is given.

tPoleDiscord is the allowed time to have discrepancy between the poles at control of three single-phase breakers. At discrepancy an output signal is activated to be used for trip or alarm, and during a command, the control function is reset, and a cause-code is given.

SuppressMidPos when *On* suppresses the mid-position during the time *tIntermediate* of the connected switches.

The parameter *InterlockCheck* decides if interlock check should be done at both select and operate, Sel & Op phase, or only at operate, Op phase.

14.3.3.3 Switch (SXCBR/SXSWI)

tStartMove is the supervision time for the apparatus to start moving after a command execution. When the time has expired, the switch function is reset, and a cause-code is given.

During the *tIntermediate* time the position indication is allowed to be in an intermediate (00) state. When the time has expired, the switch function is reset, and a cause-code is given. The indication of the mid-position at SCSWI is suppressed during this time period when the position changes from open to close or vice-versa if the parameter *SuppressMidPos* is set to *On* in the SCSWI function.

If the parameter *AdaptivePulse* is set to *Adaptive* the command output pulse resets when a new correct end position is reached. If the parameter is set to *Not adaptive* the command output pulse remains active until the timer *tOpenPulsetClosePulse* has elapsed.

tOpenPulse is the output pulse length for an open command. If *AdaptivePulse* is set to *Adaptive*, it is the maximum length of the output pulse for an open command. The default length is set to 200 ms for a circuit breaker (SXCBR) and 500 ms for a disconnector (SXSWI).

tClosePulse is the output pulse length for a close command. If *AdaptivePulse* is set to *Adaptive*, it is the maximum length of the output pulse for an open command. The default length is set to 200 ms for a circuit breaker (SXCBR) and 500 ms for a disconnector (SXSWI).

14.3.3.4 Bay Reserve (QCRSV)

The timer *tCancelRes* defines the supervision time for canceling the reservation, when this cannot be done by requesting bay due to for example communication failure.

When the parameter *ParamRequestx* (*x*=1-8) is set to *Only own bay res.* individually for each apparatus (x) in the bay, only the own bay is reserved, that is, the output for reservation request of other bays (RES_BAYS) will not be activated at selection of apparatus x.

14.3.3.5 Reservation input (RESIN)

With the *FutureUse* parameter set to *Bay future use* the function can handle bays not yet installed in the SA system.

14.4 Logic rotating switch for function selection and LHMI presentation SLGAPC

14.4.1 Identification

Function description	IEC 61850 identification	IEC 60617 identification	ANSI/IEEE C37.2 device number
Logic rotating switch for function selection and LHMI presentation	SLGAPC	-	-

14.4.2 Application

The logic rotating switch for function selection and LHMI presentation function (SLGAPC) (or the selector switch function block, as it is also known) is used to get a selector switch functionality similar with the one provided by a hardware multi-position selector switch. Hardware selector switches are used extensively by utilities, in order to have different functions operating on pre-set values. Hardware switches are however sources for maintenance issues, lower system reliability and extended purchase portfolio. The virtual selector switches eliminate all these problems.

SLGAPC function block has two operating inputs (UP and DOWN), one blocking input (BLOCK) and one operator position input (PSTO).

SLGAPC can be activated both from the local HMI and from external sources (switches), via the IED binary inputs. It also allows the operation from remote (like the station computer). SWPOSN is an integer value output, giving the actual output number. Since the number of positions of the switch can be established by settings (see below), one must be careful in coordinating the settings with the configuration (if one sets the number of positions to x in settings – for example, there will be only the first x outputs available from the block in the configuration). Also the frequency of the (UP or DOWN) pulses should be lower than the setting *tPulse*.

From the local HMI, the selector switch can be operated from Single-line diagram (SLD).

14.4.3 Setting guidelines

The following settings are available for the Logic rotating switch for function selection and LHMI presentation (SLGAPC) function:

Operation: Sets the operation of the function *Enabled* or *Disabled*.

NrPos: Sets the number of positions in the switch (max. 32).

OutType: *Steady* or *Pulsed*.

tPulse: In case of a pulsed output, it gives the length of the pulse (in seconds).

tDelay: The delay between the UP or DOWN activation signal positive front and the output activation.

StopAtExtremes: Sets the behavior of the switch at the end positions – if set to *Disabled*, when pressing UP while on first position, the switch will jump to the last position; when pressing DOWN at the last position, the switch will jump to the first position; when set to *Enabled*, no jump will be allowed.

14.5 Selector mini switch VSGAPC

14.5.1 Identification

Function description	IEC 61850 identification	IEC 60617 identification	ANSI/IEEE C37.2 device number
Selector mini switch	VSGAPC	-	-

14.5.2 Application

Selector mini switch (VSGAPC) function is a multipurpose function used in the configuration tool in PCM600 for a variety of applications, as a general purpose switch. VSGAPC can be used for both acquiring an external switch position (through the IPOS1 and the IPOS2 inputs) and represent it through the single line diagram symbols (or use it in the configuration through the outputs POS1 and POS2) as well as, a command function (controlled by the PSTO input), giving switching commands through the CMDPOS12 and CMDPOS21 outputs.

The output POSITION is an integer output, showing the actual position as an integer number 0 – 3.

An example where VSGAPC is configured to switch Autorecloser enabled–disabled from a button symbol on the local HMI is shown in figure 330. The Close and Open buttons on the local HMI are normally used for enable–disable operations of the circuit breaker.

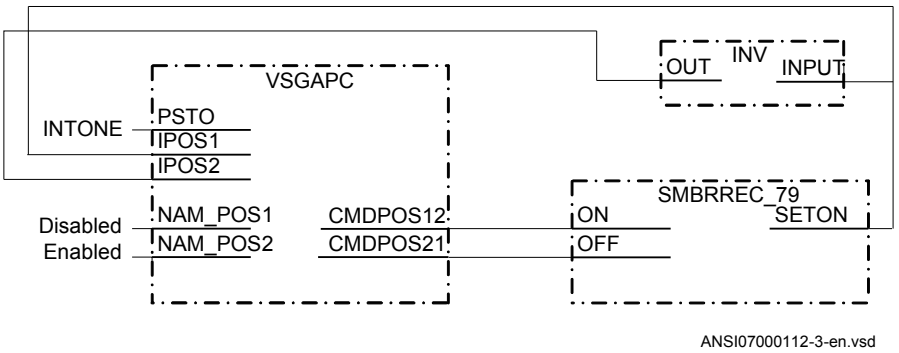

Figure 330: Control of Autorecloser from local HMI through Selector mini switch

VSGAPC is also provided with IEC 61850 communication so it can be controlled from SA system as well.

14.5.3 Setting guidelines

Selector mini switch (VSGAPC) function can generate pulsed or steady commands (by setting the *Mode* parameter). When pulsed commands are generated, the length of the pulse can be set using the *tPulse* parameter. Also, being accessible on the single line diagram (SLD), this function block has two control modes (settable through *CtlModel*): *Dir Norm* and *SBO Enh*.

14.6 Generic communication function for Double Point indication DPGAPC

14.6.1 Identification

Function description	IEC 61850 identification	IEC 60617 identification	ANSI/IEEE C37.2 device number
Generic communication function for Double Point indication	DPGAPC	-	-

14.6.2 Application

DPGAPC function block is used to combine three logical input signals into a two bit position indication, and publish the position indication to other systems, equipment or functions in the substation. The three inputs are named `OPEN`, `CLOSE` and `VALID`. DPGAPC is intended to be used as a position indicator block in the interlocking stationwide logics.

The OPEN and CLOSE inputs set one bit each in the two bit position indication, POSITION. If both OPEN and CLOSE are set at the same time the quality of the output is set to invalid. The quality of the output is also set to invalid if the VALID input is not set.

14.6.3 Setting guidelines

The function does not have any parameters available in the local HMI or PCM600.

14.7 Single point generic control 8 signals SPC8GAPC

14.7.1 Identification

Function description	IEC 61850 identification	IEC 60617 identification	ANSI/IEEE C37.2 device number
Single point generic control 8 signals	SPC8GAPC	-	-

14.7.2 Application

The Single point generic control 8 signals (SPC8GAPC) function block is a collection of 8 single point commands, designed to bring in commands from REMOTE (SCADA) to those parts of the logic configuration that do not need complicated function blocks that have the capability to receive commands (for example SCSWI). In this way, simple commands can be sent directly to the IED outputs, without confirmation. Confirmation (status) of the result of the commands is supposed to be achieved by other means, such as binary inputs and SPGGIO function blocks.

PSTO is the universal operator place selector for all control functions. Even if PSTO can be configured to allow LOCAL or ALL operator positions, the only functional position usable with the SPC8GAPC function block is REMOTE.

14.7.3 Setting guidelines

The parameters for the single point generic control 8 signals (SPC8GAPC) function are set via the local HMI or PCM600.

Operation: turning the function operation *Enabled*/*Disabled*.

There are two settings for every command output (totally 8):

Latchedx: decides if the command signal for output *x* is *Latched* (steady) or *Pulsed*.

tPulsex: if *Latchedx* is set to *Pulsed*, then *tPulsex* will set the length of the pulse (in seconds).

14.8 AutomationBits, command function for DNP3.0 AUTOBITS

14.8.1 Identification

Function description	IEC 61850 identification	IEC 60617 identification	ANSI/IEEE C37.2 device number
AutomationBits, command function for DNP3	AUTOBITS	-	-

14.8.2 Application

Automation bits, command function for DNP3 (AUTOBITS) is used within PCM600 in order to get into the configuration the commands coming through the DNP3.0 protocol.The AUTOBITS function plays the same role as functions GOOSEBINRCV (for IEC 61850) and MULTICMDRCV (for LON).AUTOBITS function block have 32 individual outputs which each can be mapped as a Binary Output point in DNP3. The output is operated by a "Object 12" in DNP3. This object contains parameters for control-code, count, on-time and off-time. To operate an AUTOBITS output point, send a control-code of latch-On, latch-Off, pulse-On, pulse-Off, Trip or Close. The remaining parameters are regarded as appropriate. For example, pulse-On, on-time=100, off-time=300, count=5 would give 5 positive 100 ms pulses, 300 ms apart.

For description of the DNP3 protocol implementation, refer to the Communication manual.

14.8.3 Setting guidelines

AUTOBITS function block has one setting, (*Operation*: *Enabled*/*Disabled*) enabling or disabling the function. These names will be seen in the DNP3 communication management tool in PCM600.

14.9 Single command, 16 signals SINGLECMD

14.9.1 Identification

Function description	IEC 61850 identification	IEC 60617 identification	ANSI/IEEE C37.2 device number
Single command, 16 signals	SINGLECMD	-	-

14.9.2 Application

Single command, 16 signals (SINGLECMD) is a common function and always included in the IED.

The IEDs may be provided with a function to receive commands either from a substation automation system or from the local HMI. That receiving function block has outputs that can be used, for example, to control high voltage apparatuses in switchyards. For local control functions, the local HMI can also be used. Together with

the configuration logic circuits, the user can govern pulses or steady output signals for control purposes within the IED or via binary outputs.

Figure 331 shows an application example of how the user can connect SINGLECMD via configuration logic circuit to control a high-voltage apparatus. This type of command control is normally carried out by sending a pulse to the binary outputs of the IED. Figure 331 shows a close operation. An open breaker operation is performed in a similar way but without the synchro-check condition.

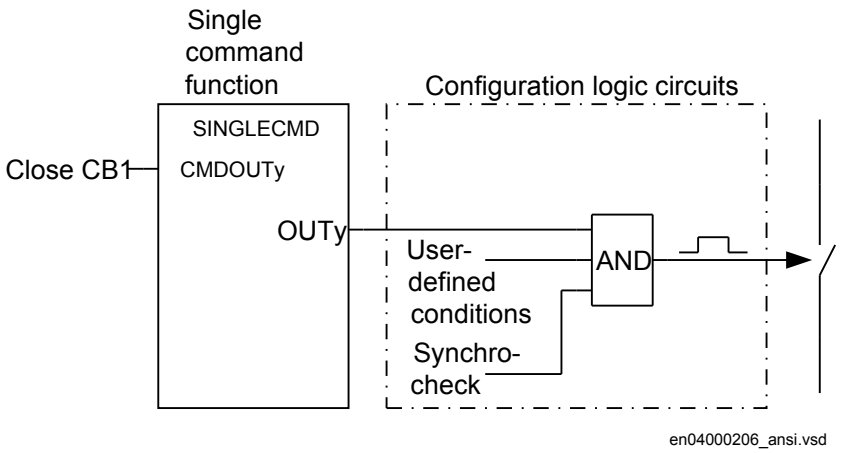

Figure 331: Application example showing a logic diagram for control of a circuit breaker via configuration logic circuits

Figure 332 and figure 333 show other ways to control functions, which require steady Enabled/Disabled signals. Here, the output is used to control built-in functions or external devices.

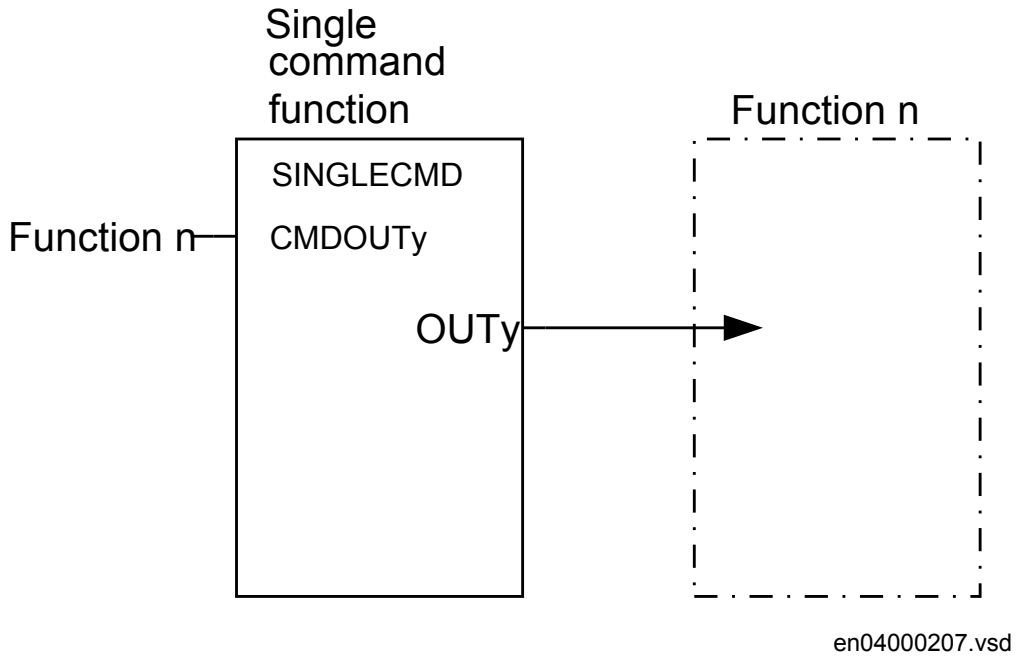

Figure 332: Application example showing a logic diagram for control of built-in functions

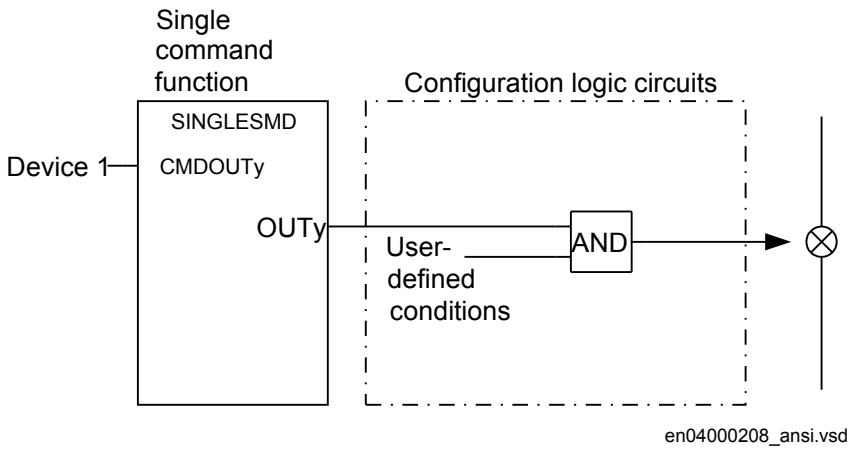

Figure 333: Application example showing a logic diagram for control of external devices via configuration logic circuits

14.9.3 Setting guidelines

The parameters for Single command, 16 signals (SINGLECMD) are set via the local HMI or PCM600.

Parameters to be set are MODE, common for the whole block, and CMDOUTy which includes the user defined name for each output signal. The MODE input sets the outputs to be one of the types Disabled, Steady, or Pulse.

- Disabled, sets all outputs to 0, independent of the values sent from the station level, that is, the operator station or remote-control gateway.
- Steady, sets the outputs to a steady signal 0 or 1, depending on the values sent from the station level.
- Pulse, gives a pulse with 100 ms duration, if a value sent from the station level is changed from 0 to 1. That means the configured logic connected to the command function block may not have a cycle time longer than the cycle time for the command function block.

14.10 Interlocking (3)

The main purpose of switchgear interlocking is:

- To avoid the dangerous or damaging operation of switchgear
- To enforce restrictions on the operation of the substation for other reasons for example, load configuration. Examples of the latter are to limit the number of parallel transformers to a maximum of two or to ensure that energizing is always from one side, for example, the high voltage side of a transformer.

This section only deals with the first point, and only with restrictions caused by switching devices other than the one to be controlled. This means that switch interlock, because of device alarms, is not included in this section.

Disconnectors and grounding switches have a limited switching capacity. Disconnectors may therefore only operate:

- With basically zero current. The circuit is open on one side and has a small extension. The capacitive current is small (for example, < 5A) and power transformers with inrush current are not allowed.
- To connect or disconnect a parallel circuit carrying load current. The switching voltage across the open contacts is thus virtually zero, thanks to the parallel circuit (for example, < 1% of rated voltage). Paralleling of power transformers is not allowed.

Grounding switches are allowed to connect and disconnect grounding of isolated points. Due to capacitive or inductive coupling there may be some voltage (for example < 40% of rated voltage) before grounding and some current (for example < 100A) after grounding of a line.

Circuit breakers are usually not interlocked. Closing is only interlocked against running disconnectors in the same bay, and the bus-coupler opening is interlocked during a busbar transfer.

The positions of all switching devices in a bay and from some other bays determine the conditions for operational interlocking. Conditions from other stations are usually not available. Therefore, a line grounding switch is usually not fully interlocked. The operator must be convinced that the line is not energized from the other side before closing the grounding switch. As an option, a voltage indication can be used for interlocking. Take care to avoid a dangerous *enable* condition at the loss of a VT secondary voltage, for example, because of a blown fuse.

The switch positions used by the operational interlocking logic are obtained from auxiliary contacts or position sensors. For each end position (open or closed) a true indication is needed - thus forming a double indication. The apparatus control function continuously checks its consistency. If neither condition is high (1 or TRUE), the switch may be in an intermediate position, for example, moving. This dynamic state may continue for some time, which in the case of disconnectors may be up to 10 seconds. Should both indications stay low for a longer period, the position indication will be interpreted as *unknown*. If both indications stay high, something is wrong, and the state is again treated as *unknown*.

In both cases an alarm is sent to the operator. Indications from position sensors shall be self-checked and system faults indicated by a fault signal. In the interlocking logic, the signals are used to avoid dangerous *enable* or *release* conditions. When the switching state of a switching device cannot be determined operation is not permitted.

For switches with an individual operation gear per phase, the evaluation must consider possible phase discrepancies. This is done with the aid of an *AND-function* for all three phases in each apparatus for both open and close indications. Phase discrepancies will result in an unknown double indication state.

14.10.1 Configuration guidelines

The following sections describe how the interlocking for a certain switchgear configuration can be realized in the IED by using standard interlocking modules and their interconnections. They also describe the configuration settings. The inputs for delivery specific conditions (Qx_EXy) are set to 1=TRUE if they are not used, except in the following cases:

- 989_EX2 and 989_EX4 in modules BH_LINE_A and BH_LINE_B
- 152_EX3 in module AB_TRAFO

when they are set to 0=FALSE.

14.10.2 Interlocking for line bay ABC_LINE (3)

14.10.2.1 Application

The interlocking for line bay (ABC_LINE, 3) function is used for a line connected to a double busbar arrangement with a transfer busbar according to figure 334. The function can also be used for a double busbar arrangement without transfer busbar or a single busbar arrangement with/without transfer busbar.

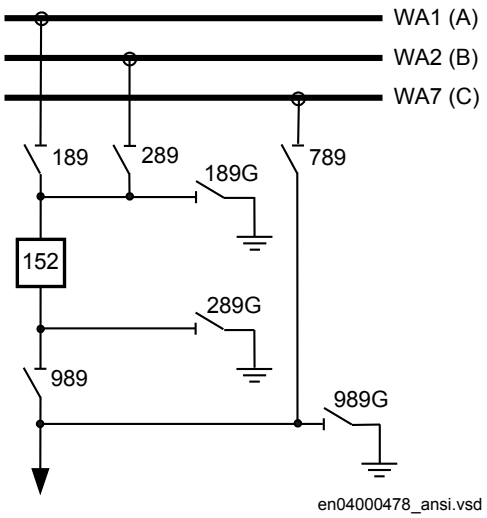

Figure 334: Switchyard layout ABC_LINE (3)

The signals from other bays connected to the module ABC_LINE (3) are described below.

14.10.2.2 Signals from bypass busbar

To derive the signals:

Signal	
BB7_D_OP	All line disconnectors on bypass WA7 except in the own bay are open.
VP_BB7_D	The switch status of disconnectors on bypass busbar WA7 are valid.
EXDU_BPB	No transmission error from any bay containing disconnectors on bypass busbar WA7

These signals from each line bay (ABC_LINE, 3) except that of the own bay are needed:

Signal	
789OPTR	789 is open
VP789TR	The switch status for 789 is valid.
EXDU_BPB	No transmission error from the bay that contains the above information.

For bay n, these conditions are valid:

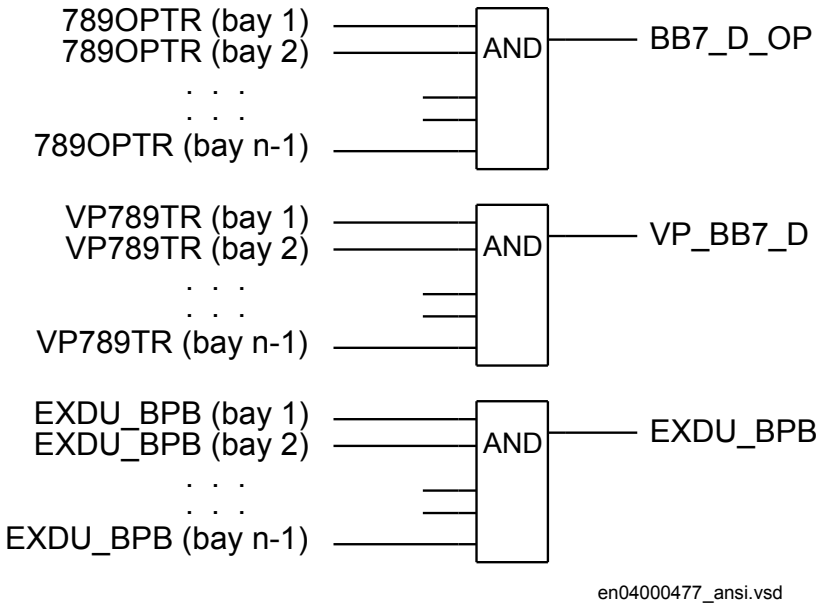

Figure 335: Signals from bypass busbar in line bay n

14.10.2.3 Signals from bus-coupler

If the busbar is divided by bus-section disconnectors into bus sections, the busbar-busbar connection could exist via the bus-section disconnector and bus-coupler within the other bus section.

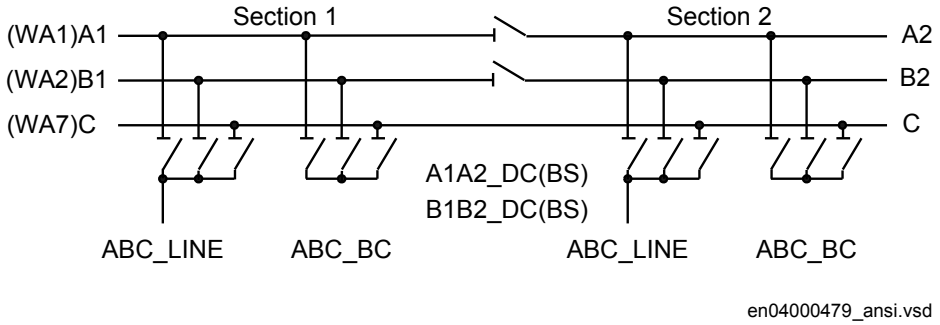

Figure 336: Busbars divided by bus-section disconnectors (circuit breakers)

To derive the signals:

Signal	
BC_12_CL	A bus-coupler connection exists between busbar WA1 and WA2.
BC_17_OP	No bus-coupler connection between busbar WA1 and WA7.
BC_17_CL	A bus-coupler connection exists between busbar WA1and WA7.
BC_27_OP	No bus-coupler connection between busbar WA2 and WA7.
BC_27_CL	A bus-coupler connection exists between busbar WA2 and WA7.
VP_BC_12	The switch status of BC_12 is valid.
VP_BC_17	The switch status of BC_17 is valid.
VP_BC_27	The switch status of BC_27 is valid.
EXDU_BC	No transmission error from any bus-coupler bay (BC).

These signals from each bus-coupler bay (ABC_BC) are needed:

Signal	
BC12CLTR	A bus-coupler connection through the own bus-coupler exists between busbar WA1 and WA2.
BC17OPTR	No bus-coupler connection through the own bus-coupler between busbar WA1 and WA7.
BC17CLTR	A bus-coupler connection through the own bus-coupler exists between busbar WA1 and WA7.
BC27OPTR	No bus-coupler connection through the own bus-coupler between busbar WA2 and WA7.
BC27CLTR	A bus-coupler connection through the own bus-coupler exists between busbar WA2 and WA7.
VPBC12TR	The switch status of BC_12 is valid.
VPBC17TR	The switch status of BC_17 is valid.
VPBC27TR	The switch status of BC_27 is valid.
EXDU_BC	No transmission error from the bay that contains the above information.

These signals from each bus-section disconnector bay (A1A2_DC) are also needed. For B1B2_DC, corresponding signals from busbar B are used. The same type of module (A1A2_DC) is used for different busbars, that is, for both bus-section disconnector A1A2_DC and B1B2_DC.

Signal	
DCOPTR	The bus-section disconnector is open.
DCCLTR	The bus-section disconnector is closed.
VPDCTR	The switch status of bus-section disconnector DC is valid.
EXDU_DC	No transmission error from the bay that contains the above information.

If the busbar is divided by bus-section circuit breakers, the signals from the bus-section coupler bay (A1A2_BS), rather than the bus-section disconnector bay (A1A2_DC) must be used. For B1B2_BS, corresponding signals from busbar B are used. The same type of module (A1A2_BS) is used for different busbars, that is, for both bus-section circuit breakers A1A2_BS and B1B2_BS.

Signal	
S1S2OPTR	No bus-section coupler connection between bus-sections 1 and 2.
S1S2CLTR	A bus-section coupler connection exists between bus-sections 1 and 2.
VPS1S2TR	The switch status of bus-section coupler BS is valid.
EXDU_BS	No transmission error from the bay that contains the above information.

For a line bay in section 1, these conditions are valid:

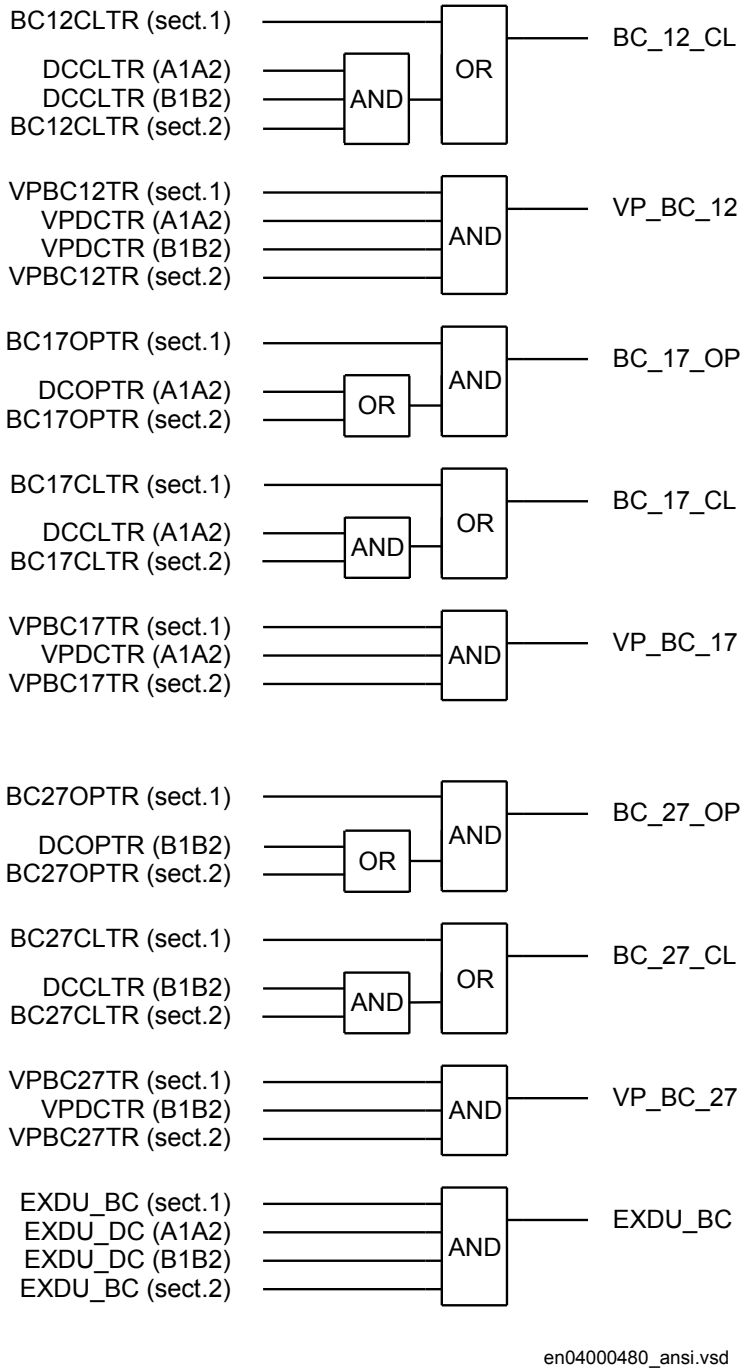

Figure 337: Signals to a line bay in section 1 from the bus-coupler bays in each section

For a line bay in section 2, the same conditions as above are valid by changing section 1 to section 2 and vice versa.

14.10.2.4 Configuration setting

If there is no bypass busbar and therefore no 789 disconnector, then the interlocking for 789 is not used. The states for 789, 7189G, BB7_D, BC_17, BC_27 are set to open by setting the appropriate module inputs as follows. In the functional block diagram, 0 and 1 are designated 0=FALSE and 1=TRUE:

- 789_OP = 1
- 789_CL = 0

- 7189G_OP = 1
- 7189G_CL = 0

- BB7_D_OP = 1

- BC_17_OP = 1
- BC_17_CL = 0
- BC_27_OP = 1
- BC_27_CL = 0

- EXDU_BPB = 1

- VP_BB7_D = 1
- VP_BC_17 = 1
- VP_BC_27 = 1

If there is no second busbar WA2 and therefore no 289 disconnector, then the interlocking for 289 is not used. The state for 289, 2189G, BC_12, BC_27 are set to open by setting the appropriate module inputs as follows. In the functional block diagram, 0 and 1 are designated 0=FALSE and 1=TRUE:

- 289_OP = 1
- 289_CL = 0

- 2189G_OP = 1
- 2189G_CL = 0

- BC_12_CL = 0
- BC_27_OP = 1
- BC_27_CL = 0

- VP_BC_12 = 1

14.10.3 Interlocking for bus-coupler bay ABC_BC (3)

14.10.3.1 Application

The interlocking for bus-coupler bay (ABC_BC, 3) function is used for a bus-coupler bay connected to a double busbar arrangement according to figure 338. The function can also be used for a single busbar arrangement with transfer busbar or double busbar arrangement without transfer busbar.

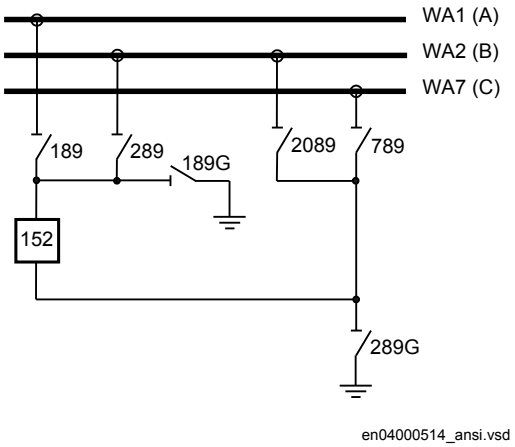

Figure 338: Switchyard layout ABC_BC (3)

14.10.3.2 Configuration

The signals from the other bays connected to the bus-coupler module ABC_BC are described below.

14.10.3.3 Signals from all feeders

To derive the signals:

Signal	
BBTR_OP	No busbar transfer is in progress concerning this bus-coupler.
VP_BBTR	The switch status is valid for all apparatuses involved in the busbar transfer.
EXDU_12	No transmission error from any bay connected to the WA1/WA2 busbars.

These signals from each line bay (ABC_LINE), each transformer bay (AB_TRAFO), and bus-coupler bay (ABC_BC), except the own bus-coupler bay are needed:

Signal	
Q1289OPTR	189 or 289 or both are open.
VP1289TR	The switch status of 189 and 289 are valid.
EXDU_12	No transmission error from the bay that contains the above information.

For bus-coupler bay n, these conditions are valid:

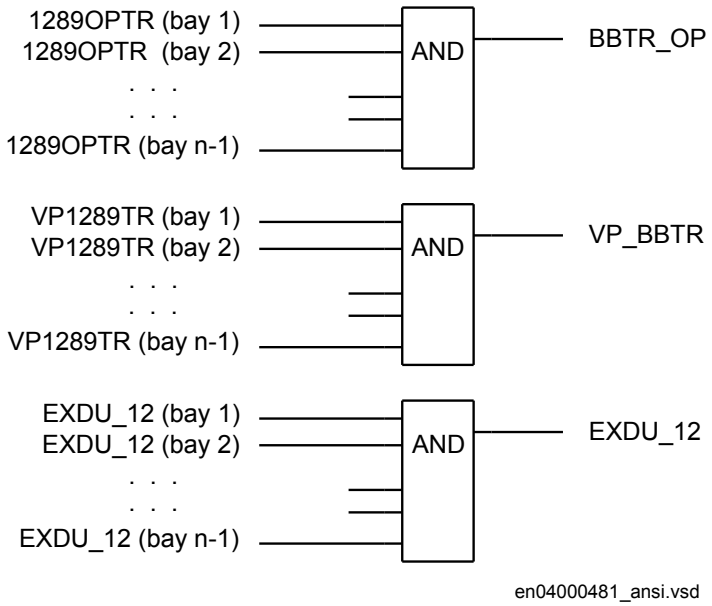

Figure 339: Signals from any bays in bus-coupler bay n

If the busbar is divided by bus-section disconnectors into bus-sections, the signals BBTR are connected in parallel - if both bus-section disconnectors are closed. So for the basic project-specific logic for BBTR above, add this logic:

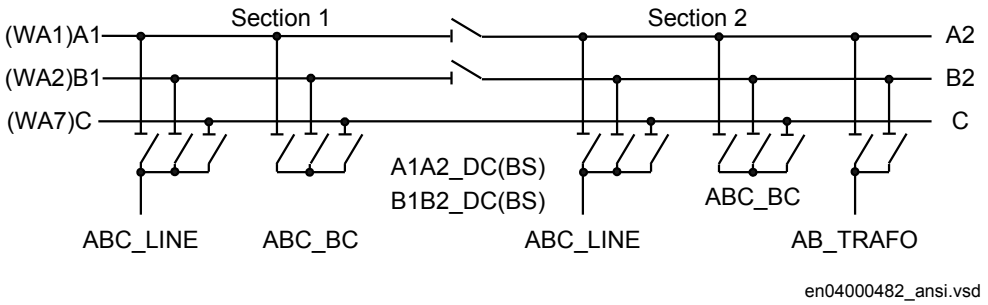

Figure 340: Busbars divided by bus-section disconnectors (circuit breakers)

The following signals from each bus-section disconnector bay (A1A2_DC) are needed. For B1B2_DC, corresponding signals from busbar B are used. The same type of module (A1A2_DC) is used for different busbars, that is, for both bus-section disconnector A1A2_DC and B1B2_DC.

Signal	
DCOPTR	The bus-section disconnector is open.
VPDCTR	The switch status of bus-section disconnector DC is valid.
EXDU_DC	No transmission error from the bay that contains the above information.

If the busbar is divided by bus-section circuit breakers, the signals from the bus-section coupler bay (A1A2_BS), rather than the bus-section disconnector bay (A1A2_DC), have to be used. For B1B2_BS, corresponding signals from busbar B are used. The same type of module (A1A2_BS) is used for different busbars, that is, for both bus-section circuit breakers A1A2_BS and B1B2_BS.

Signal	
S1S2OPTR	No bus-section coupler connection between bus-sections 1 and 2.
VPS1S2TR	The switch status of bus-section coupler BS is valid.
EXDU_BS	No transmission error from the bay that contains the above information.

For a bus-coupler bay in section 1, these conditions are valid:

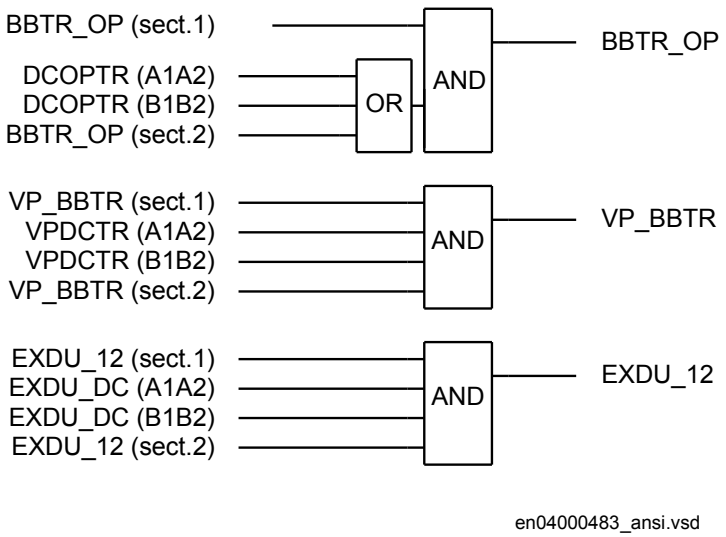

Figure 341: Signals to a bus-coupler bay in section 1 from any bays in each section

For a bus-coupler bay in section 2, the same conditions as above are valid by changing section 1 to section 2 and vice versa.

14.10.3.4 Signals from bus-coupler

If the busbar is divided by bus-section disconnectors into bus-sections, the signals BC_12 from the busbar coupler of the other busbar section must be transmitted to the own busbar coupler if both disconnectors are closed.

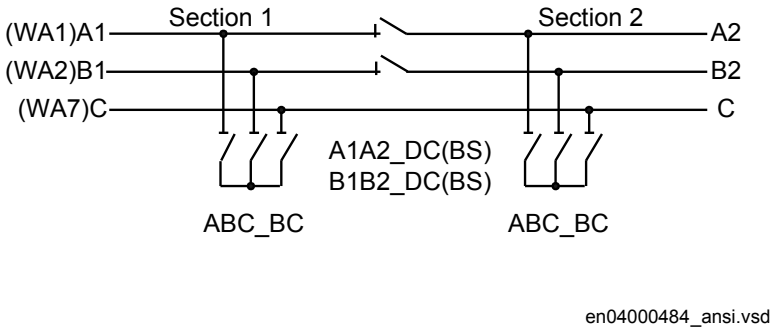

Figure 342: Busbars divided by bus-section disconnectors (circuit breakers)

To derive the signals:

Signal	
BC_12_CL	Another bus-coupler connection exists between busbar WA1 and WA2.
VP_BC_12	The switch status of BC_12 is valid.
EXDU_BC	No transmission error from any bus-coupler bay (BC).

These signals from each bus-coupler bay (ABC_BC), except the own bay, are needed:

Signal	
BC12CLTR	A bus-coupler connection through the own bus-coupler exists between busbar WA1 and WA2.
VPBC12TR	The switch status of BC_12 is valid.
EXDU_BC	No transmission error from the bay that contains the above information.

These signals from each bus-section disconnector bay (A1A2_DC) are also needed. For B1B2_DC, corresponding signals from busbar B are used. The same type of module (A1A2_DC) is used for different busbars, that is, for both bus-section disconnector A1A2_DC and B1B2_DC.

Signal	
DCCLTR	The bus-section disconnector is closed.
VPDCTR	The switch status of bus-section disconnector DC is valid.
EXDU_DC	No transmission error from the bay that contains the above information.

If the busbar is divided by bus-section circuit breakers, the signals from the bus-section coupler bay (A1A2_BS), rather than the bus-section disconnector bay (A1A2_DC), must be used. For B1B2_BS, corresponding signals from busbar B are used. The same type of module (A1A2_BS) is used for different busbars, that is, for both bus-section circuit breakers A1A2_BS and B1B2_BS.

Signal	
S1S2CLTR	A bus-section coupler connection exists between bus sections 1 and 2.
VPS1S2TR	The switch status of bus-section coupler BS is valid.
EXDU_BS	No transmission error from the bay containing the above information.

For a bus-coupler bay in section 1, these conditions are valid:

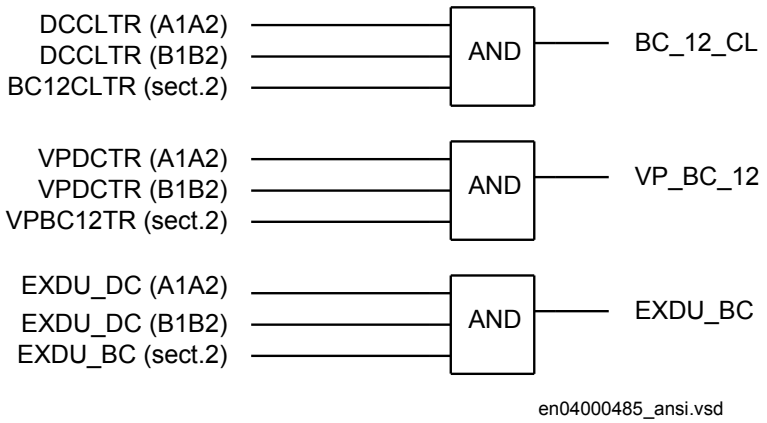

Figure 343: Signals to a bus-coupler bay in section 1 from a bus-coupler bay in another section

For a bus-coupler bay in section 2, the same conditions as above are valid by changing section 1 to section 2 and vice versa.

14.10.3.5 Configuration setting

If there is no bypass busbar and therefore no 289 and 789 disconnectors, then the interlocking for 289 and 789 is not used. The states for 289, 789, 7189G are set to open

by setting the appropriate module inputs as follows. In the functional block diagram, 0 and 1 are designated 0=FALSE and 1=TRUE:

- 289_OP = 1
- 289_CL = 0

- 789_OP = 1
- 789_CL = 0

- 7189G_OP = 1
- 7189G_CL = 0

If there is no second busbar B and therefore no 289 and 2089 disconnectors, then the interlocking for 289 and 2089 are not used. The states for 289, 2089, 2189G, BC_12, BBTR are set to open by setting the appropriate module inputs as follows. In the functional block diagram, 0 and 1 are designated 0=FALSE and 1=TRUE:

- 289_OP = 1
- 289_CL = 0

- 2089_OP = 1
- 2089_CL = 0

- 2189G_OP = 1
- 2189G_CL = 0

- BC_12_CL = 0
- VP_BC_12 = 1

- BBTR_OP = 1
- VP_BBTR = 1

14.10.4 Interlocking for transformer bay AB_TRAFO (3)

14.10.4.1 Application

The interlocking for transformer bay (AB_TRAFO, 3) function is used for a transformer bay connected to a double busbar arrangement according to figure 344. The function is used when there is no disconnector between circuit breaker and transformer. Otherwise, the interlocking for line bay (ABC_LINE, 3) function can be used. This function can also be used in single busbar arrangements.

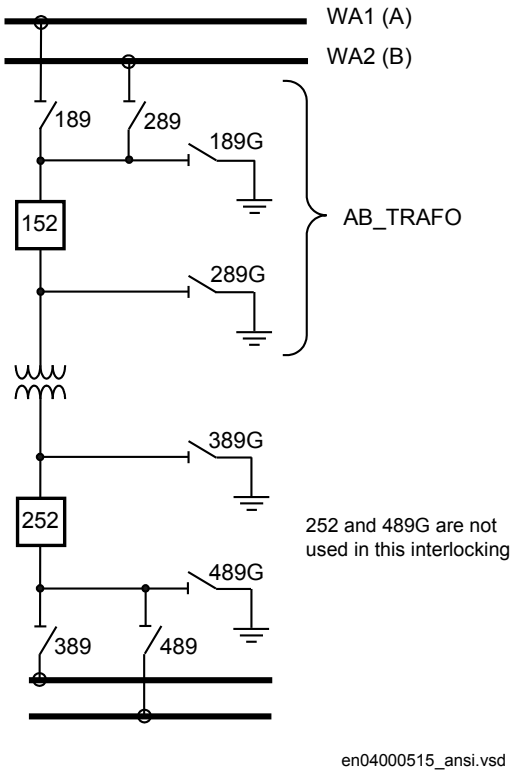

Figure 344: Switchyard layout AB_TRAFO (3)

The signals from other bays connected to the module AB_TRAFO are described below.

14.10.4.2 Signals from bus-coupler

If the busbar is divided by bus-section disconnectors into bus-sections, the busbar-busbar connection could exist via the bus-section disconnector and bus-coupler within the other bus-section.

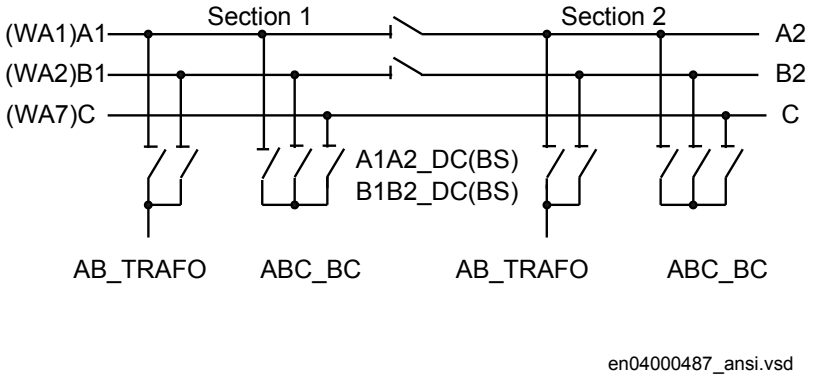

Figure 345: Busbars divided by bus-section disconnectors (circuit breakers)

The project-specific logic for input signals concerning bus-coupler are the same as the specific logic for the line bay (ABC_LINE):

Signal	
BC_12_CL	A bus-coupler connection exists between busbar WA1 and WA2.
VP_BC_12	The switch status of BC_12 is valid.
EXDU_BC	No transmission error from bus-coupler bay (BC).

The logic is identical to the double busbar configuration “Signals from bus-coupler“.

14.10.4.3 Configuration setting

If there are no second busbar B and therefore no 289 disconnector, then the interlocking for 289 is not used. The state for 289, 2189G, BC_12 are set to open by setting the appropriate module inputs as follows. In the functional block diagram, 0 and 1 are designated 0=FALSE and 1=TRUE:

- 289_OP = 1
- 289QB2_CL = 0

- 2189G_OP = 1
- 2189G_CL = 0

- BC_12_CL = 0
- VP_BC_12 = 1

If there is no second busbar B at the other side of the transformer and therefore no 489 disconnector, then the state for 489 is set to open by setting the appropriate module inputs as follows:

- 489_OP = 1
- 489_CL = 0

14.10.5 Interlocking for bus-section breaker A1A2_BS (3)

14.10.5.1 Application

The interlocking for bus-section breaker (A1A2_BS ,3) function is used for one bus-section circuit breaker between section 1 and 2 according to figure 346. The function can be used for different busbars, which includes a bus-section circuit breaker.

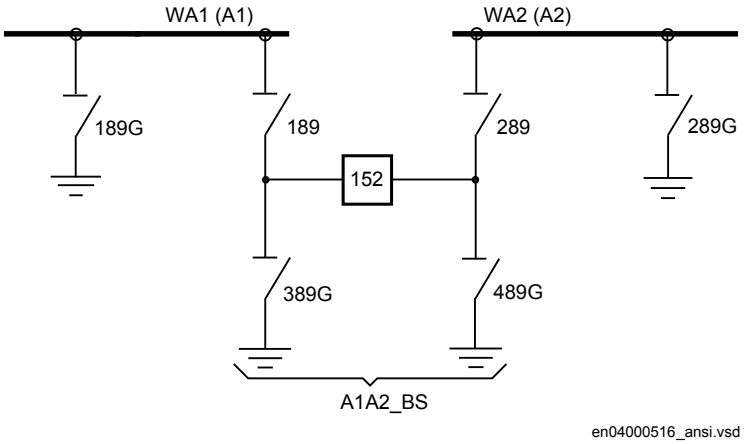

Figure 346: Switchyard layout A1A2_BS (3)

The signals from other bays connected to the module A1A2_BS are described below.

14.10.5.2 Signals from all feeders

If the busbar is divided by bus-section circuit breakers into bus-sections and both circuit breakers are closed, the opening of the circuit breaker must be blocked if a bus-coupler connection exists between busbars on one bus-section side and if on the other bus-section side a busbar transfer is in progress:

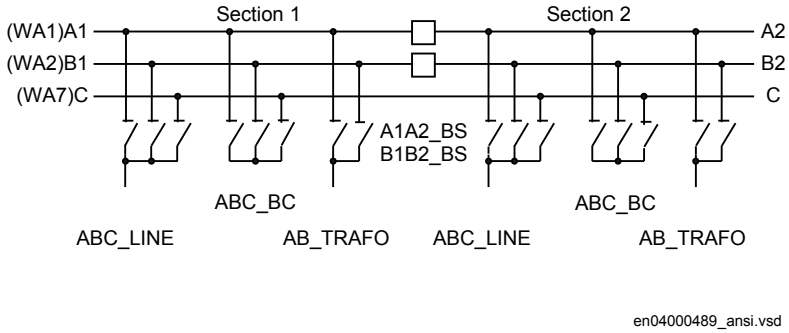

Figure 347: Busbars divided by bus-section circuit breakers

To derive the signals:

Signal	
BBTR_OP	No busbar transfer is in progress concerning this bus-section.
VP_BBTR	The switch status of BBTR is valid.
EXDU_12	No transmission error from any bay connected to busbar 1(A) and 2(B).

These signals from each line bay (ABC_LINE), each transformer bay (AB_TRAFO), and bus-coupler bay (ABC_BC) are needed:

Signal	
1289OPTR	189 or 289 or both are open.
VP1289TR	The switch status of 189 and 289 are valid.
EXDU_12	No transmission error from the bay that contains the above information.

These signals from each bus-coupler bay (ABC_BC) are needed:

Signal	
BC12OPTR	No bus-coupler connection through the own bus-coupler between busbar WA1 and WA2.
VPBC12TR	The switch status of BC_12 is valid.
EXDU_BC	No transmission error from the bay that contains the above information.

These signals from the bus-section circuit breaker bay (A1A2_BS, B1B2_BS) are needed.

Signal	
S1S2OPTR	No bus-section coupler connection between bus-sections 1 and 2.
VPS1S2TR	The switch status of bus-section coupler BS is valid.
EXDU_BS	No transmission error from the bay that contains the above information.

For a bus-section circuit breaker between A1 and A2 section busbars, these conditions are valid:

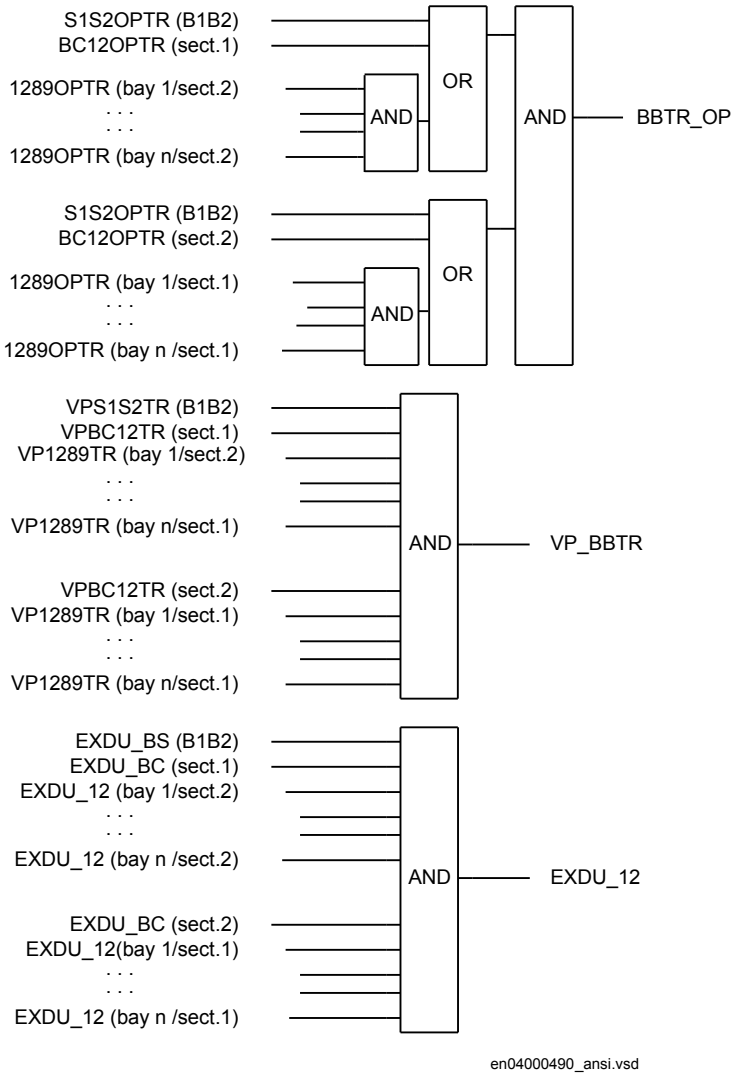

Figure 348: Signals from any bays for a bus-section circuit breaker between sections A1 and A2

For a bus-section circuit breaker between B1 and B2 section busbars, these conditions are valid:

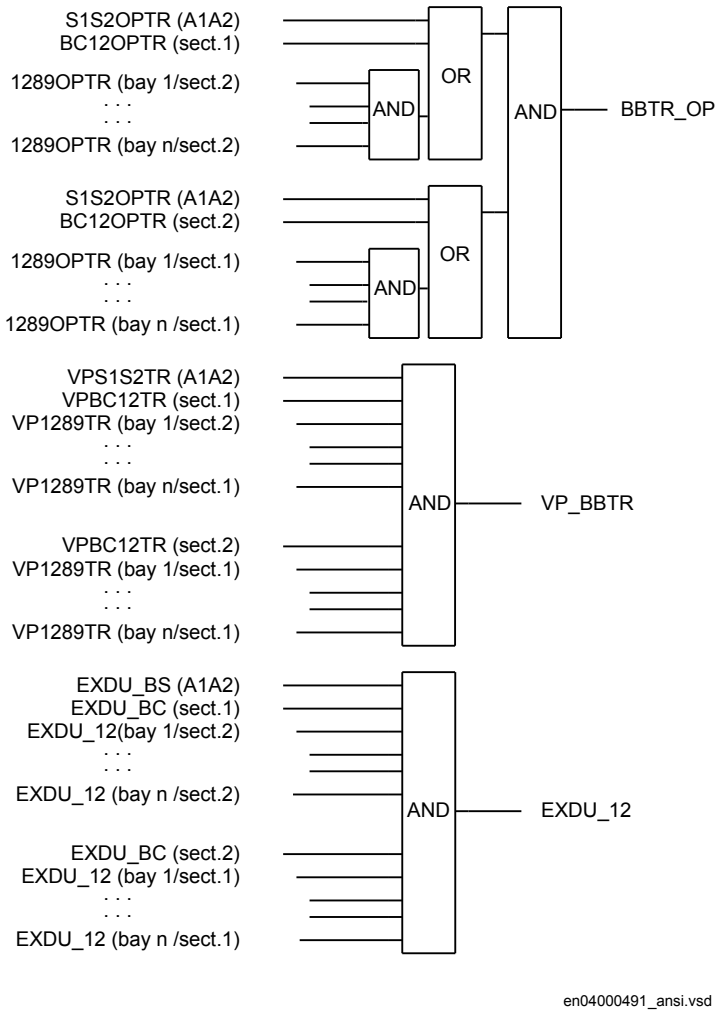

Figure 349: Signals from any bays for a bus-section circuit breaker between sections B1 and B2

14.10.5.3 Configuration setting

If there is no other busbar via the busbar loops that are possible, then either the interlocking for the 152 open circuit breaker is not used or the state for BBTR is set to open. That is, no busbar transfer is in progress in this bus-section:

- BBTR_OP = 1
- VP_BBTR = 1

14.10.6 Interlocking for bus-section disconnector A1A2_DC (3)

14.10.6.1 Application

The interlocking for bus-section disconnector (A1A2_DC, 3) function is used for one bus-section disconnector between section 1 and 2 according to figure 350. A1A2_DC (3) function can be used for different busbars, which includes a bus-section disconnector.

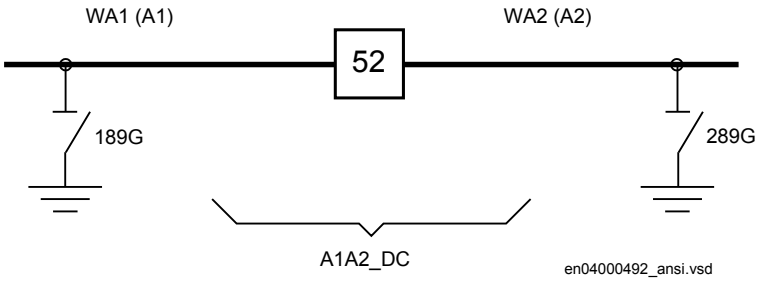

Figure 350: Switchyard layout A1A2_DC (3)

The signals from other bays connected to the module A1A2_DC are described below.

14.10.6.2 Signals in single breaker arrangement

If the busbar is divided by bus-section disconnectors, the condition *no other disconnector connected to the bus-section* must be made by a project-specific logic.

The same type of module (A1A2_DC) is used for different busbars, that is, for both bus-section disconnector A1A2_DC and B1B2_DC. But for B1B2_DC, corresponding signals from busbar B are used.

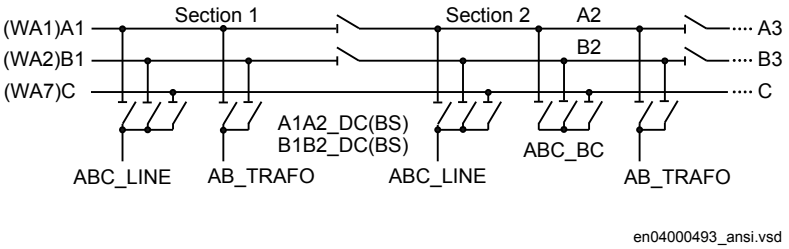

Figure 351: Busbars divided by bus-section disconnectors (circuit breakers)

To derive the signals:

Signal	
S1DC_OP	All disconnectors on bus-section 1 are open.
S2DC_OP	All disconnectors on bus-section 2 are open.
VPS1_DC	The switch status of disconnectors on bus-section 1 is valid.
VPS2_DC	The switch status of disconnectors on bus-section 2 is valid.
EXDU_BB	No transmission error from any bay that contains the above information.

These signals from each line bay (ABC_LINE), each transformer bay (AB_TRAFO), and each bus-coupler bay (ABC_BC) are needed:

Signal	
189OPTR	189 is open.
289OPTR	289 is open (AB_TRAFO, ABC_LINE).
22089OTR	289 and 2089 are open (ABC_BC).
VP189TR	The switch status of 189 is valid.
VP289TR	The switch status of 289 is valid.
V22089TR	The switch status of 289 and 2089 are valid.
EXDU_BB	No transmission error from the bay that contains the above information.

If there is an additional bus-section disconnector, the signal from the bus-section disconnector bay (A1A2_DC) must be used:

Signal	
DCOPTR	The bus-section disconnector is open.
VPDCTR	The switch status of bus-section disconnector DC is valid.
EXDU_DC	No transmission error from the bay that contains the above information.

If there is an additional bus-section circuit breaker rather than an additional bus-section disconnector the signals from the bus-section, circuit-breaker bay (A1A2_BS) rather than the bus-section disconnector bay (A1A2_DC) must be used:

Signal	
189OPTR	189 is open.
289OPTR	289 is open.
VP189TR	The switch status of 189 is valid.
VP289TR	The switch status of 289 is valid.
EXDU_BS	No transmission error from the bay BS (bus-section coupler bay) that contains the above information.

For a bus-section disconnector, these conditions from the A1 busbar section are valid:

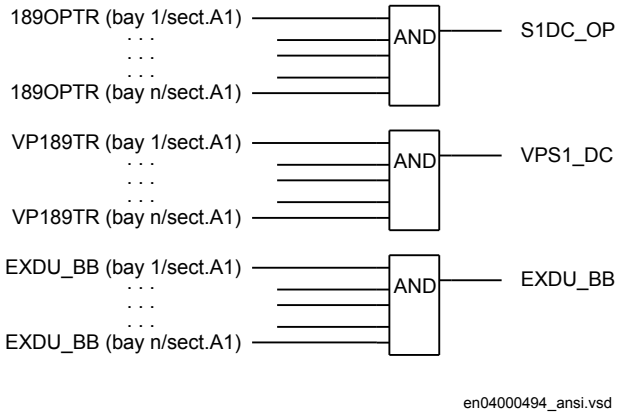

Figure 352: Signals from any bays in section A1 to a bus-section disconnector

For a bus-section disconnector, these conditions from the A2 busbar section are valid:

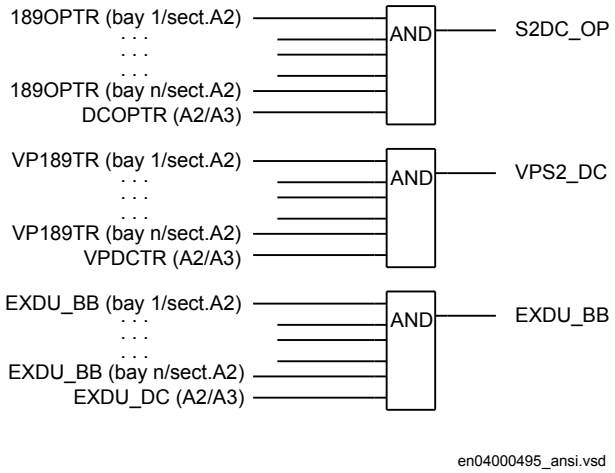

Figure 353: Signals from any bays in section A2 to a bus-section disconnector

For a bus-section disconnector, these conditions from the B1 busbar section are valid:

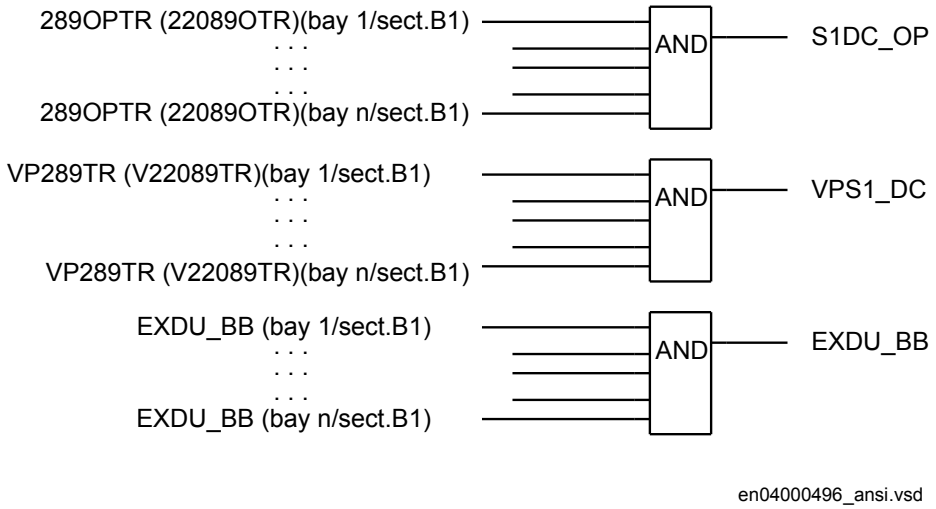

Figure 354: Signals from any bays in section B1 to a bus-section disconnector

For a bus-section disconnector, these conditions from the B2 busbar section are valid:

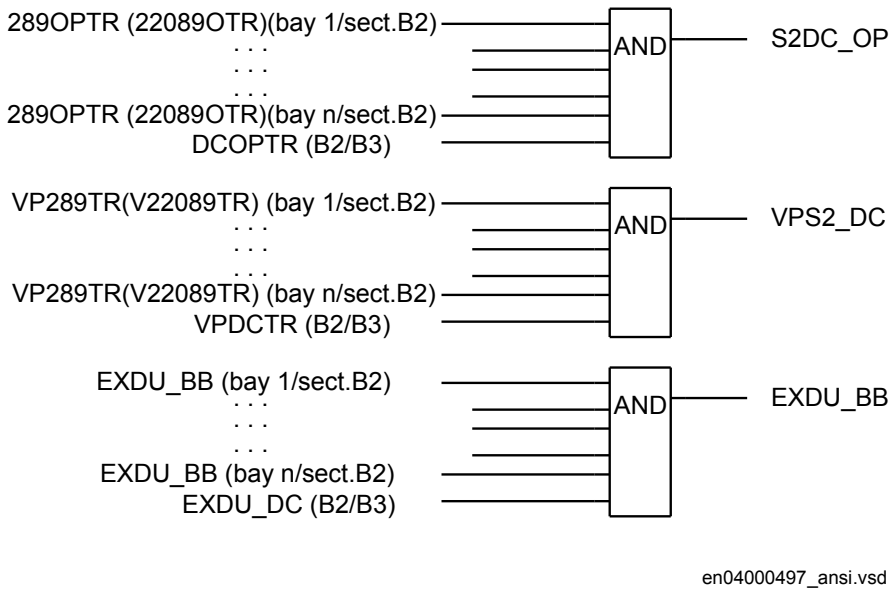

Figure 355: Signals from any bays in section B2 to a bus-section disconnector

14.10.6.3 Signals in double-breaker arrangement

If the busbar is divided by bus-section disconnectors, the condition for the busbar disconnector bay *no other disconnector connected to the bus-section* must be made by a project-specific logic.

The same type of module (A1A2_DC) is used for different busbars, that is, for both bus-section disconnector A1A2_DC and B1B2_DC. But for B1B2_DC, corresponding signals from busbar B are used.

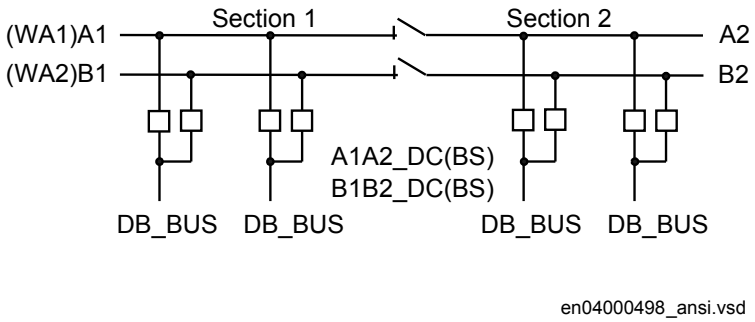

Figure 356: Busbars divided by bus-section disconnectors (circuit breakers)

To derive the signals:

Signal	
S1DC_OP	All disconnectors on bus-section 1 are open.
S2DC_OP	All disconnectors on bus-section 2 are open.
VPS1_DC	The switch status of all disconnectors on bus-section 1 is valid.
VPS2_DC	The switch status of all disconnectors on bus-section 2 is valid.
EXDU_BB	No transmission error from double-breaker bay (DB) that contains the above information.

These signals from each double-breaker bay (DB_BUS) are needed:

Signal	
189OPTR	189 is open.
289OPTR	289 is open.
VP189TR	The switch status of 189 is valid.
VP289TR	The switch status of 289 is valid.
EXDU_DB	No transmission error from the bay that contains the above information.

The logic is identical to the double busbar configuration “Signals in single breaker arrangement”.

For a bus-section disconnector, these conditions from the A1 busbar section are valid:

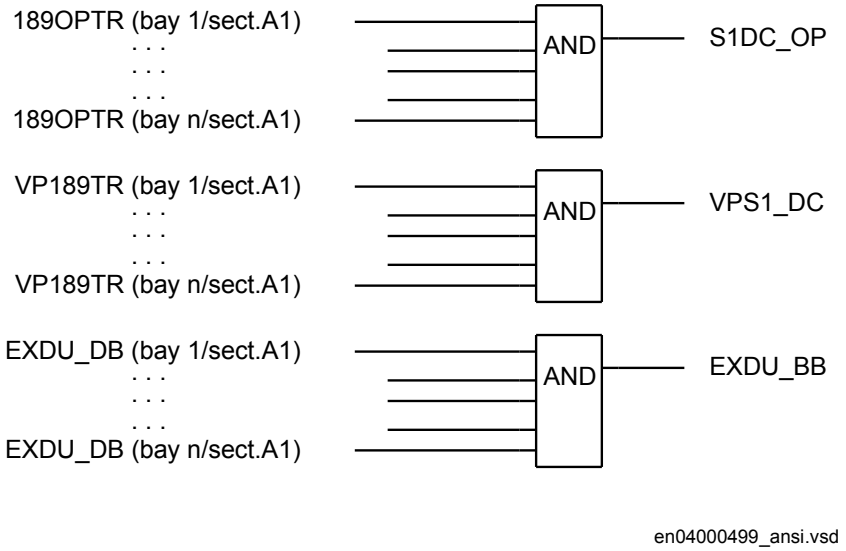

Figure 357: Signals from double-breaker bays in section A1 to a bus-section disconnector

For a bus-section disconnector, these conditions from the A2 busbar section are valid:

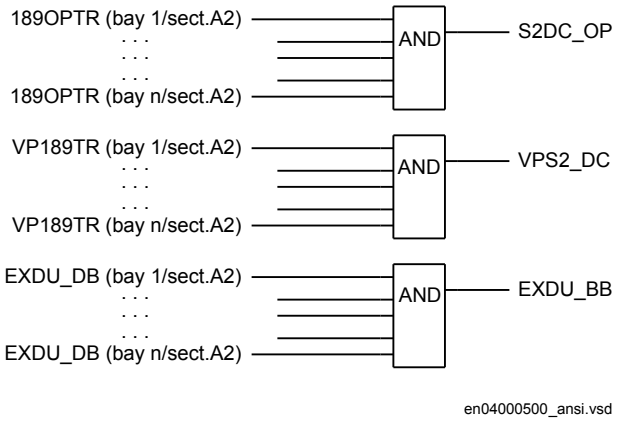

Figure 358: Signals from double-breaker bays in section A2 to a bus-section disconnector

For a bus-section disconnector, these conditions from the B1 busbar section are valid:

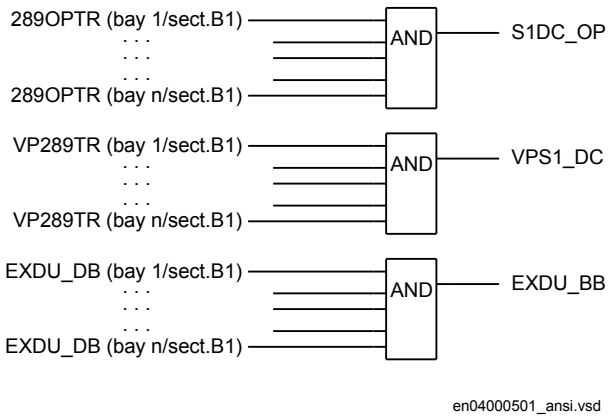

Figure 359: Signals from double-breaker bays in section B1 to a bus-section disconnector

For a bus-section disconnector, these conditions from the B2 busbar section are valid:

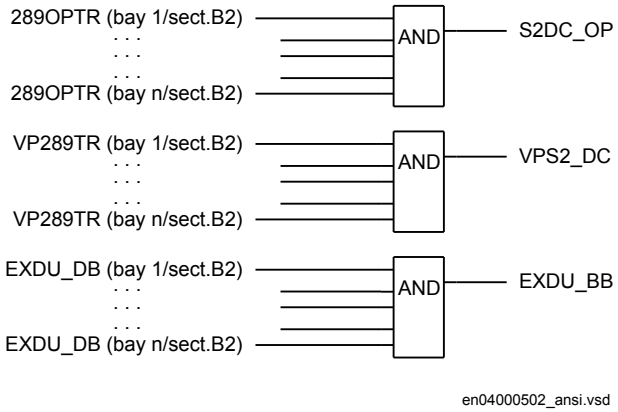

Figure 360: Signals from double-breaker bays in section B2 to a bus-section disconnector

14.10.6.4 Signals in breaker and a half arrangement

If the busbar is divided by bus-section disconnectors, the condition for the busbar disconnector bay *no other disconnector connected to the bus-section* must be made by a project-specific logic.

The same type of module (A1A2_DC) is used for different busbars, that is, for both bus-section disconnector A1A2_DC and B1B2_DC. But for B1B2_DC, corresponding signals from busbar B are used.

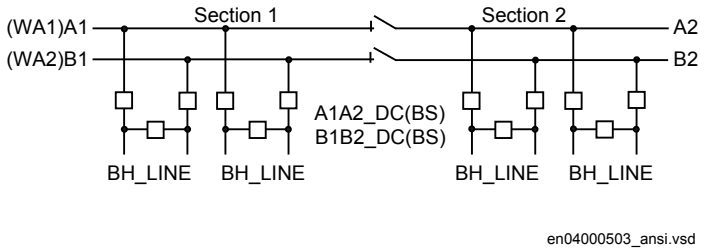

Figure 361: Busbars divided by bus-section disconnectors (circuit breakers)

The project-specific logic is the same as for the logic for the double-breaker configuration.

Signal	
S1DC_OP	All disconnectors on bus-section 1 are open.
S2DC_OP	All disconnectors on bus-section 2 are open.
VPS1_DC	The switch status of disconnectors on bus-section 1 is valid.
VPS2_DC	The switch status of disconnectors on bus-section 2 is valid.
EXDU_BB	No transmission error from breaker and a half (BH) that contains the above information.

14.10.7 Interlocking for busbar grounding switch BB_ES (3)

14.10.7.1 Application

The interlocking for busbar grounding switch (BB_ES, 3) function is used for one busbar grounding switch on any busbar parts according to figure 362.

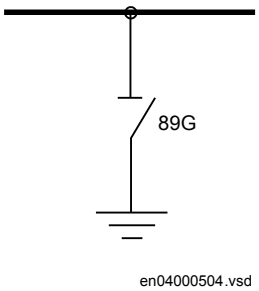

Figure 362: Switchyard layout BB_ES (3)

The signals from other bays connected to the module BB_ES are described below.

14.10.7.2 Signals in single breaker arrangement

The busbar grounding switch is only allowed to operate if all disconnectors of the bus-section are open.

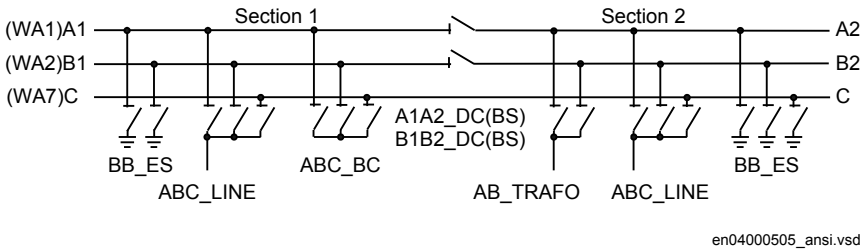

Figure 363: Busbars divided by bus-section disconnectors (circuit breakers)

To derive the signals:

Signal	
BB_DC_OP	All disconnectors on this part of the busbar are open.
VP_BB_DC	The switch status of all disconnector on this part of the busbar is valid.
EXDU_BB	No transmission error from any bay containing the above information.

These signals from each line bay (ABC_LINE), each transformer bay (AB_TRAFO), and each bus-coupler bay (ABC_BC) are needed:

Signal	
189OPTR	189 is open.
289OPTR	289 is open (AB_TRAFO, ABC_LINE)
22089OTR	289 and 2089 are open (ABC_BC)
789OPTR	789 is open.
VP189TR	The switch status of 189 is valid.
VP289TR	The switch status of 289 is valid.
V22089TR	The switch status of 289and 2089 is valid.
VP789TR	The switch status of 789 is valid.
EXDU_BB	No transmission error from the bay that contains the above information.

These signals from each bus-section disconnector bay (A1A2_DC) are also needed. For B1B2_DC, corresponding signals from busbar B are used. The same type of module (A1A2_DC) is used for different busbars, that is, for both bus-section disconnectors A1A2_DC and B1B2_DC.

Signal	
DCOPTR	The bus-section disconnector is open.
VPDCTR	The switch status of bus-section disconnector DC is valid.
EXDU_DC	No transmission error from the bay that contains the above information.

If no bus-section disconnector exists, the signal DCOPTR, VPDCTR and EXDU_DC are set to 1 (TRUE).

If the busbar is divided by bus-section circuit breakers, the signals from the bus-section coupler bay (A1A2_BS) rather than the bus-section disconnector bay (A1A2_DC) must be used. For B1B2_BS, corresponding signals from busbar B are used. The same type of module (A1A2_BS) is used for different busbars, that is, for both bus-section circuit breakers A1A2_BS and B1B2_BS.

Signal	
189OPTR	189 is open.
289OPTR	289 is open.
VP189TR	The switch status of 189 is valid.
VP289TR	The switch status of 289 is valid.
EXDU_BS	No transmission error from the bay BS (bus-section coupler bay) that contains the above information.

For a busbar grounding switch, these conditions from the A1 busbar section are valid:

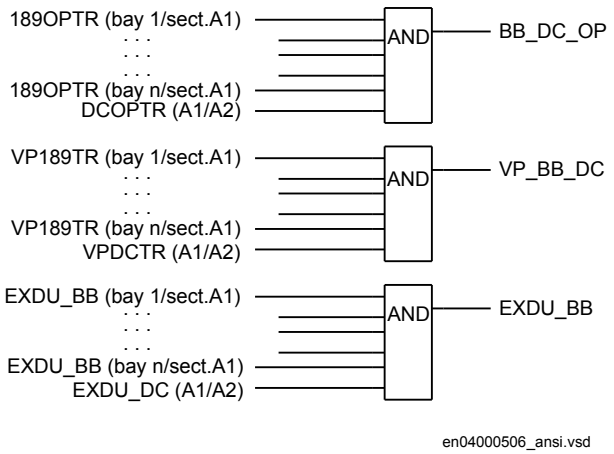

Figure 364: Signals from any bays in section A1 to a busbar grounding switch in the same section

For a busbar grounding switch, these conditions from the A2 busbar section are valid:

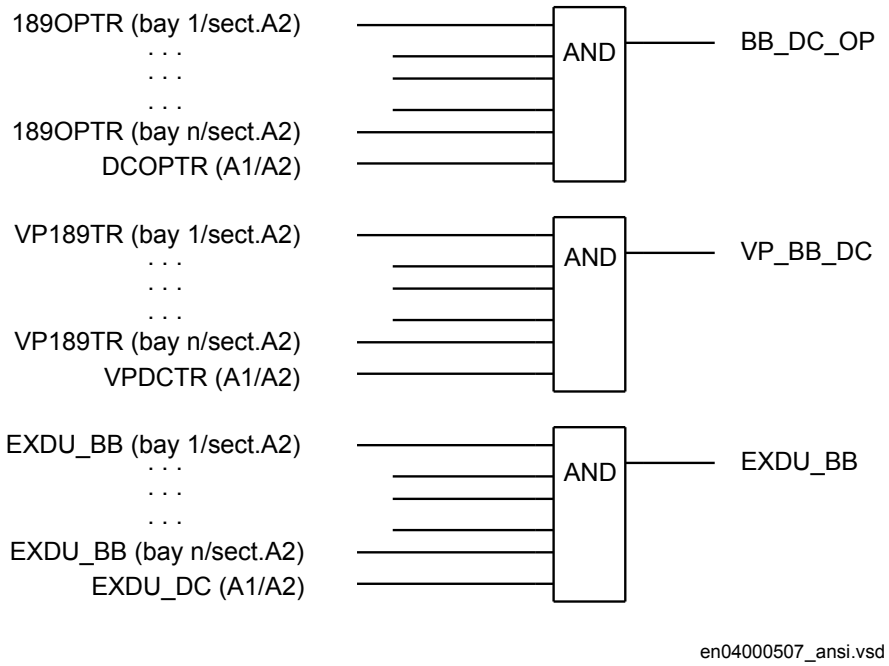

Figure 365: Signals from any bays in section A2 to a busbar grounding switch in the same section

For a busbar grounding switch, these conditions from the B1 busbar section are valid:

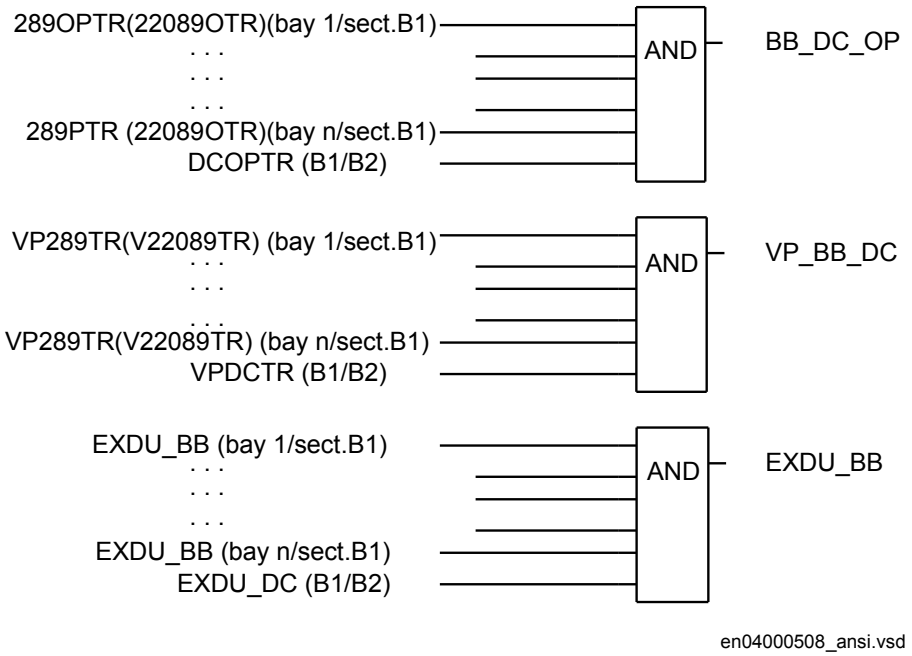

Figure 366: Signals from any bays in section B1 to a busbar grounding switch in the same section

For a busbar grounding switch, these conditions from the B2 busbar section are valid:

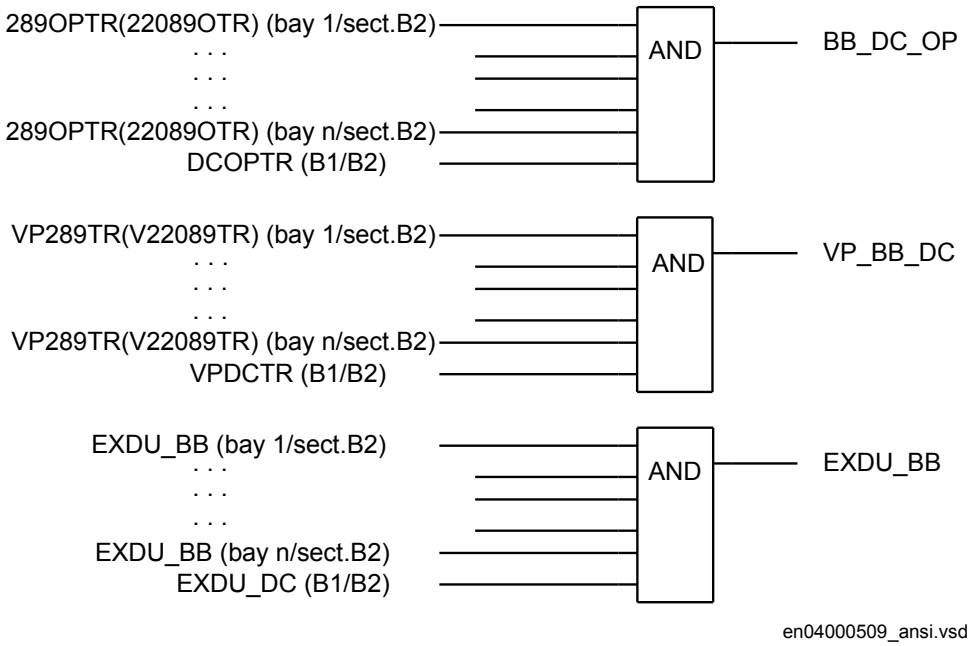

Figure 367: Signals from any bays in section B2 to a busbar grounding switch in the same section

For a busbar grounding switch on bypass busbar C, these conditions are valid:

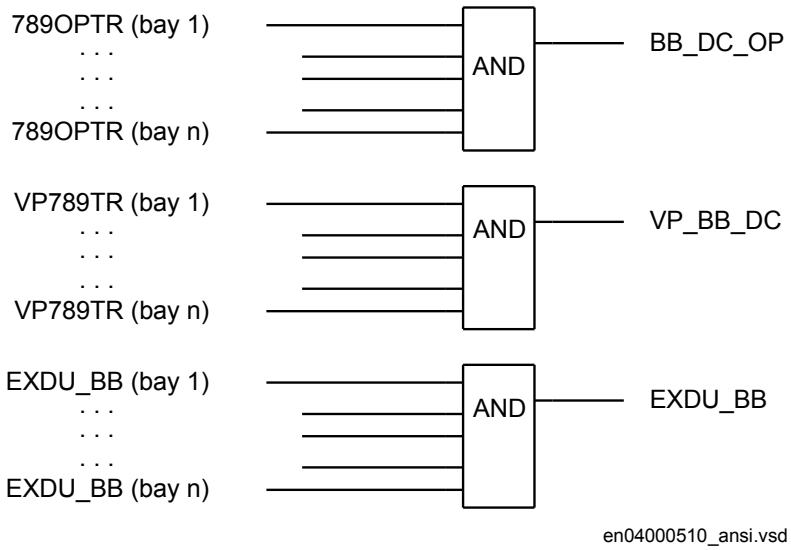

Figure 368: Signals from bypass busbar to busbar grounding switch

14.10.7.3 Signals in double-breaker arrangement

The busbar grounding switch is only allowed to operate if all disconnectors of the bus section are open.

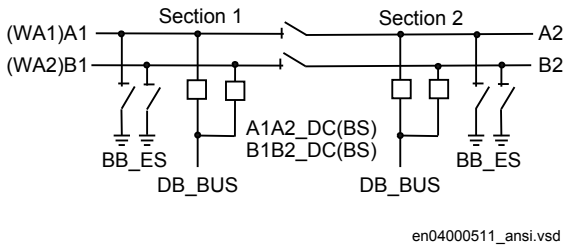

Figure 369: Busbars divided by bus-section disconnectors (circuit breakers)

To derive the signals:

Signal	
BB_DC_OP	All disconnectors of this part of the busbar are open.
VP_BB_DC	The switch status of all disconnectors on this part of the busbar are valid.
EXDU_BB	No transmission error from any bay that contains the above information.

These signals from each double-breaker bay (DB_BUS) are needed:

Signal	
189OPTR	189 is open.
289OPTR	289 is open.
VP189TR	The switch status of 189 is valid.
VP289TR	The switch status of 289 is valid.
EXDU_DB	No transmission error from the bay that contains the above information.

These signals from each bus-section disconnector bay (A1A2_DC) are also needed. For B1B2_DC, corresponding signals from busbar B are used. The same type of module (A1A2_DC) is used for different busbars, that is, for both bus-section disconnectors A1A2_DC and B1B2_DC.

Signal	
DCOPTR	The bus-section disconnector is open.
VPDCTR	The switch status of bus-section disconnector DC is valid.
EXDU_DC	No transmission error from the bay that contains the above information.

The logic is identical to the double busbar configuration described in section “Signals in single breaker arrangement”.

14.10.7.4 Signals in breaker and a half arrangement

The busbar grounding switch is only allowed to operate if all disconnectors of the bus-section are open.

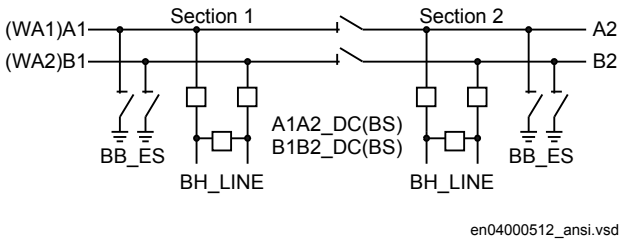

Figure 370: Busbars divided by bus-section disconnectors (circuit breakers)

The project-specific logic are the same as for the logic for the double busbar configuration described in section “Signals in single breaker arrangement”.

Signal	
BB_DC_OP	All disconnectors on this part of the busbar are open.
VP_BB_DC	The switch status of all disconnectors on this part of the busbar is valid.
EXDU_BB	No transmission error from any bay that contains the above information.

14.10.8 Interlocking for double CB bay DB (3)

14.10.8.1 Application

The interlocking for a double busbar double circuit breaker bay including DB_BUS_A (3), DB_BUS_B (3) and DB_LINE (3) functions are used for a line connected to a double busbar arrangement according to figure 371.

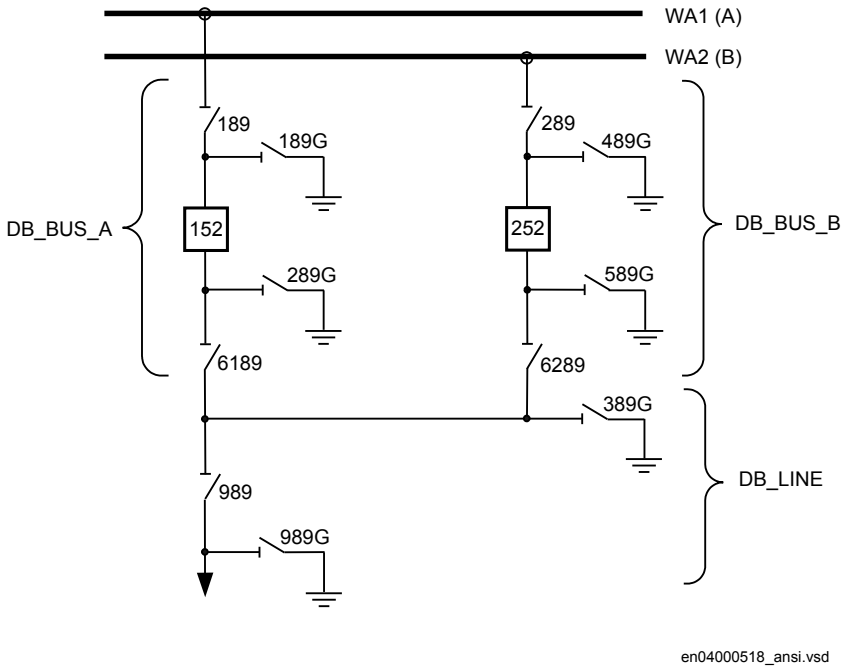

Figure 371: Switchyard layout double circuit breaker

Three types of interlocking modules per double circuit breaker bay are defined. DB_BUS_A (3) handles the circuit breaker QA1 that is connected to busbar WA1 and the disconnectors and earthing switches of this section. DB_BUS_B (3) handles the circuit breaker QA2 that is connected to busbar WA2 and the disconnectors and earthing switches of this section.

For a double circuit-breaker bay, the modules DB_BUS_A, DB_LINE and DB_BUS_B must be used.

14.10.8.2 Configuration setting

For application without 989 and 989G, just set the appropriate inputs to open state and disregard the outputs. In the functional block diagram, 0 and 1 are designated 0=FALSE and 1=TRUE:

- 989_OP = 1
- 989_CL = 0

- 989G_OP = 1
- 989G_CL = 0

If, in this case, line voltage supervision is added, then rather than setting 989 to open state, specify the state of the voltage supervision:

- 989_OP = VOLT_OFF
- 989_CL = VOLT_ON

If there is no voltage supervision, then set the corresponding inputs as follows:

- VOLT_OFF = 1
- VOLT_ON = 0

14.10.9 Interlocking for breaker-and-a-half diameter BH (3)

14.10.9.1 Application

The interlocking for breaker-and-a-half diameter (BH_CONN(3), BH_LINE_A(3), BH_LINE_B(3)) functions are used for lines connected to a breaker-and-a-half diameter according to figure 372.

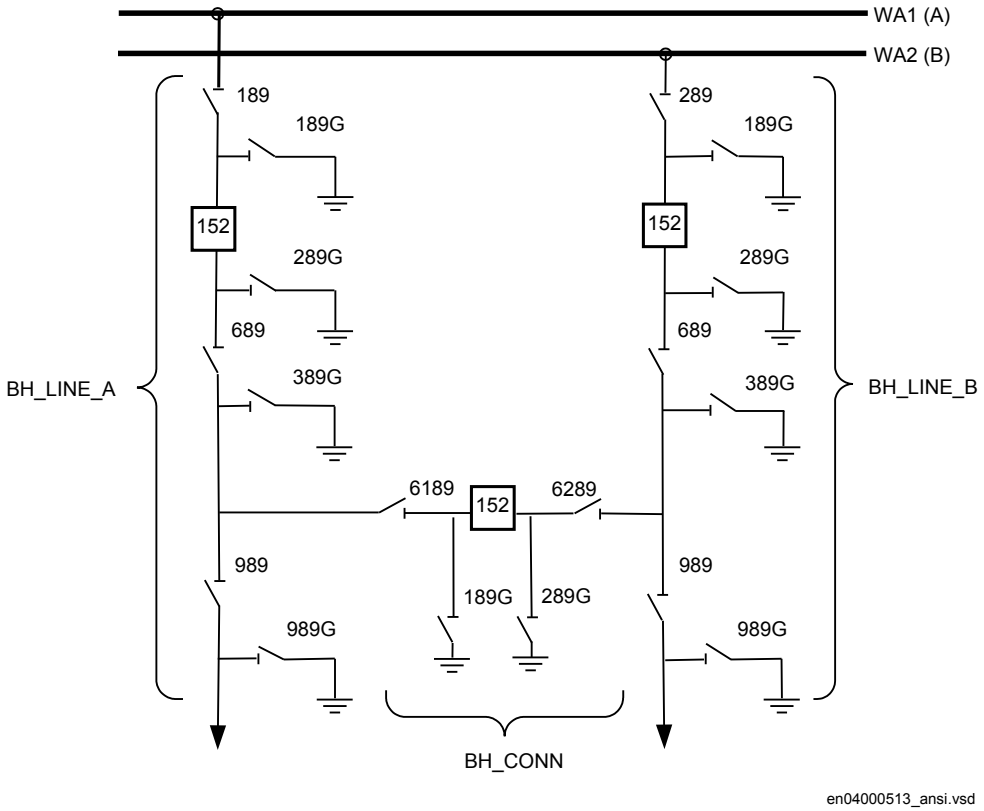

Figure 372: Switchyard layout breaker-and-a-half

Three types of interlocking modules per diameter are defined. BH_LINE_A (3) and BH_LINE_B (3) are the connections from a line to a busbar. BH_CONN (3) is the connection between the two lines of the diameter in the breaker-and-a-half switchyard layout.

For a breaker-and-a-half arrangement, the modules BH_LINE_A, BH_CONN and BH_LINE_B must be used.

14.10.9.2 Configuration setting

For application without 989 and 989G, just set the appropriate inputs to open state and disregard the outputs. In the functional block diagram, 0 and 1 are designated 0=FALSE and 1=TRUE:

- 989_OP = 1
- 989_CL = 0

- 989G_OP = 1
- 989G_CL = 0

If, in this case, line voltage supervision is added, then rather than setting 989 to open state, specify the state of the voltage supervision:

- 989_OP = VOLT_OFF
- 989_CL = VOLT_ON

If there is no voltage supervision, then set the corresponding inputs as follows:

- VOLT_OFF = 1
- VOLT_ON = 0

14.10.10 Horizontal communication via GOOSE for interlocking GOOSEINTLKRCV

Table 47: GOOSEINTLKRCV Non group settings (basic)

Name	Values (Range)	Unit	Step	Default	Description
Operation	Disabled Enabled	-	-	Disabled	Operation Disabled/Enabled

Section 15 Scheme communication

15.1 Scheme communication logic for distance or overcurrent protection ZCPSCH(85)

15.1.1 Identification

Function description	IEC 61850 identification	IEC 60617 identification	ANSI/IEEE C37.2 device number
Scheme communication logic for distance or overcurrent protection	ZCPSCH	-	85

15.1.2 Application

To achieve fast fault clearing for a fault on the part of the line not covered by the instantaneous zone 1, the stepped distance protection function can be supported with logic, that uses communication channels.

One communication channel in each direction, which can transmit an on/off signal is required. The performance and security of this function is directly related to the transmission channel speed, and security against false or lost signals. For this reason special channels are used for this purpose. When power line carrier is used for communication, these special channels are strongly recommended due to the communication disturbance caused by the primary fault.

Communication speed, or minimum time delay, is always of utmost importance because the purpose for using communication is to improve the tripping speed of the scheme.

To avoid false signals that could cause false tripping, it is necessary to pay attention to the security of the communication channel. At the same time it is important pay attention to the communication channel dependability to ensure that proper signals are communicated during power system faults, the time during which the protection schemes must perform their tasks flawlessly.

The logic supports the following communications schemes; blocking scheme, permissive schemes (overreaching and underreaching), unblocking scheme and direct intertrip.

A permissive scheme is inherently faster and has better security against false tripping than a blocking scheme. On the other hand, permissive scheme depends on a received CR signal for a fast trip, so its dependability is lower than that of a blocking scheme.

15.1.2.1 Blocking schemes

In blocking scheme a reverse looking zone is used to send a block signal to remote end to block an overreaching zone.

Since the scheme is sending the blocking signal during conditions where the protected line is healthy, it is common to use the line itself as communication media (PLC). The scheme can be used on all line lengths.

The blocking scheme is very dependable because it will operate for faults anywhere on the protected line if the communication channel is out of service. On the other hand, it is less secure than permissive schemes because it will trip for external faults within the reach of the tripping function if the communication channel is out of service.

Inadequate speed or dependability can cause spurious tripping for external faults. Inadequate security can cause delayed tripping for internal faults.

To secure that the send signal will arrive before the zone used in the communication scheme will trip, the trip is released first after the time delay *tCoord* has elapsed. The setting of *tCoord* must be set longer than the maximal transmission time of the channel. A security margin of at least 10 ms should be considered.

The timer *tSendMin* for prolonging the send signal is proposed to set to zero.

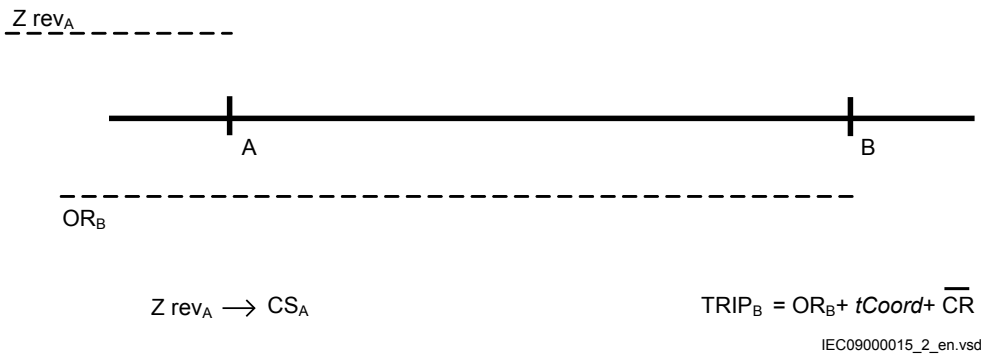

Figure 373: Principle of blocking scheme

OR:	Overreaching
CR:	Communication signal received
CS:	Communication signal send
Z rev$_A$:	Reverse zone

15.1.2.2 Permissive schemes

In permissive scheme permission to trip is sent from local end to remote end(s), that is protection at local end have detected a fault on the protected object. The received signal(s) is combined with an overreaching zone and gives an instantaneous trip if the received signal is present during the time the chosen zone is detected a fault in forward direction.

Either end may send a permissive (or command) signal to trip to the other end(s), and the teleprotection equipment need to be able to receive while transmitting.

A general requirement on permissive schemes is that it shall be fast and secure.

Depending on if the sending signal(s) is issued by underreaching or overreaching zone, it is divided into Permissive underreach or Permissive overreach scheme.

Permissive underreaching scheme

Permissive underreaching scheme is not suitable to use on short line length due to difficulties for distance protection measurement in general to distinguish between internal and external faults in those applications.

The underreaching zones at local and remote end(s) must overlap in reach to prevent a gap between the protection zones where faults would not be detected. If the

underreaching zone do not meet required sensitivity due to for instance fault infeed from remote end blocking or permissive overreaching scheme should be considered.

The received signal (CR) must be received when the overreaching zone is still activated to achieve an instantaneous trip. In some cases, due to the fault current distribution, the overreaching zone can operate only after the fault has been cleared at the terminal nearest to the fault. There is a certain risk that in case of a trip from an independent tripping zone, the zone issuing the send signal (CS) resets before the overreaching zone has operated at the remote terminal. To assure a sufficient duration of the received signal (CR), the send signal (CS), can be prolonged by a *tSendMin* reset timer. The recommended setting of *tSendMin* is 100 ms.

Since the received communication signal is combined with the output from an overreaching zone, there is less concern about false signal causing an incorrect trip. Therefore set the timer *tCoord* to zero.

Failure of the communication channel does not affect the selectivity, but delays tripping at one end(s) for certain fault locations.

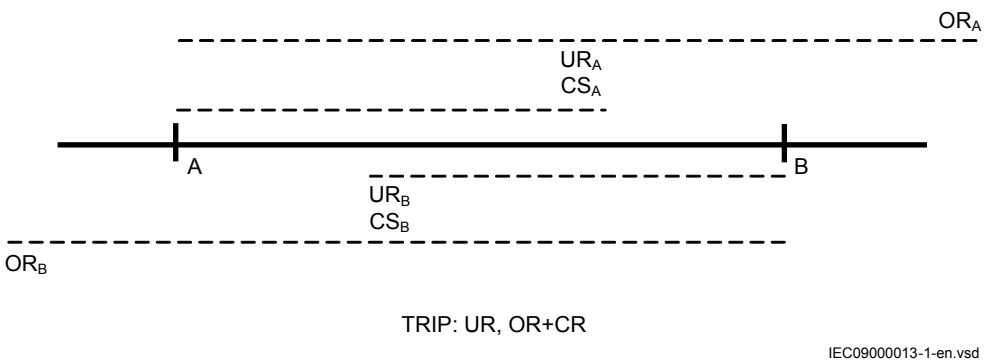

Figure 374: Principle of Permissive underreaching scheme

UR: Underreaching

OR: Overreaching

CR: Communication signal received

CS: Communication signal send

Permissive overreaching scheme

In permissive overreaching scheme there is an overreaching zone that issues the send signal. At remote end the received signal together with activating of an overreaching zone gives instantaneous trip of the protected object. The overreaching zone used in the

teleprotection scheme must be activated at the same time as the received signal is present. The scheme can be used for all line lengths.

In permissive overreaching schemes, the communication channel plays an essential roll to obtain fast tripping at both ends. Failure of the communication channel may affect the selectivity and delay tripping at one end at least, for faults anywhere along the protected circuit.

Teleprotection operating in permissive overreaching scheme must beside the general requirement of fast and secure operation also consider requirement on dependability. Inadequate security can cause unwanted tripping for external faults. Inadequate speed or dependability can cause delayed tripping for internal faults or even unwanted operations.

This scheme may use virtually any communication media that is not adversely affected by electrical interference from fault generated noise or by electrical phenomena, such as lightning, that cause faults. Communication media that uses metallic path are particularly subjected to this type of interference, therefore, they must be properly shielded or otherwise designed to provide an adequate communication signal during power system faults.

At the permissive overreaching scheme, the send signal (CS) might be issued in parallel both from an overreaching zone and an underreaching, independent tripping zone. The CS signal from the overreaching zone must not be prolonged while the CS signal from zone 1 can be prolonged.

To secure correct operations of current reversal logic in case of parallel lines, when applied, the send signal CS shall not be prolonged. So set the *tSendMin* to zero in this case.

There is no need to delay the trip at receipt of the signal, so set the timer *tCoord* to zero.

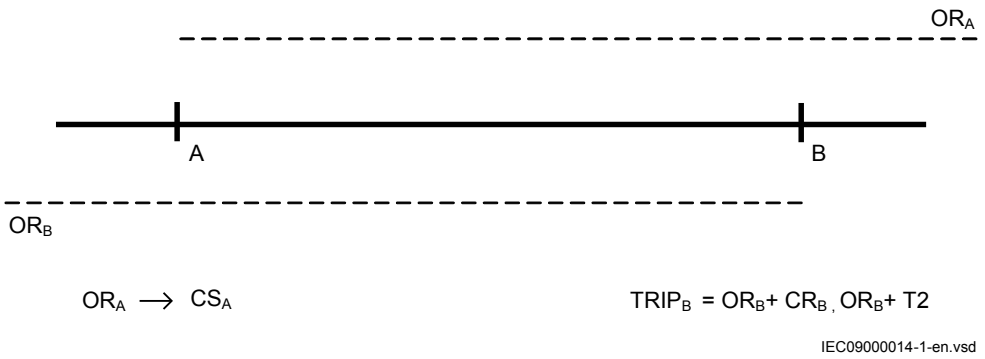

Figure 375: Principle of Permissive overreaching scheme

OR: Overreaching

CR: Communication signal received

CS: Communication signal send

T2: Timer step 2

Unblocking scheme

Metallic communication paths adversely affected by fault generated noise may not be suitable for conventional permissive schemes that rely on signal transmitted during a protected line fault. With power line carrier, for example, the communication signal may be attenuated by the fault, especially when the fault is close to the line end, thereby disabling the communication channel.

To overcome the lower dependability in permissive schemes, an unblocking function can be used. Use this function at older, less reliable, power-line carrier (PLC) communication, where the signal has to be sent through the primary fault. The unblocking function uses a guard signal CR_GUARD, which must always be present, even when no CR signal is received. The absence of the CR_GUARD signal during the security time is used as a CR signal. This also enables a permissive scheme to operate when the line fault blocks the signal transmission. Set the *tSecurity* to 35 ms.

15.1.2.3 Intertrip scheme

In some power system applications, there is a need to trip the remote end breaker immediately from local protections. This applies, for instance, when transformers or reactors are connected to the system without circuit-breakers or for remote tripping following operation of breaker failure protection.

In intertrip scheme, the send signal is initiated by an underreaching zone or from an external protection (transformer or reactor protection). At remote end, the received signals initiate a trip without any further protection criteria. To limit the risk for unwanted trip due to spurious sending of signals, the timer *tCoord* should be set to 10-30 ms dependant on type of communication channel.

The general requirement for teleprotection equipment operating in intertripping applications is that it should be very secure and very dependable, since both inadequate security and dependability may cause unwanted operation. In some applications the equipment shall be able to receive while transmitting, and commands may be transmitted over longer time period than for other teleprotection systems.

15.1.3 Setting guidelines

The parameters for the scheme communication logic function are set via the local HMI or PCM600.

Configure the zones used for the CS send and for scheme communication tripping by using the ACT configuration tool.

The recommended settings of *tCoord* timer are based on maximal recommended transmission time for analogue channels according to IEC 60834-1. It is recommended to coordinate the proposed settings with actual performance for the teleprotection equipment to get optimized settings.

15.1.3.1 Blocking scheme

Set *Operation*	= *Enabled*
Set *SchemeType*	= *Blocking*
Set *tCoord*	25 ms (10 ms + maximal transmission time)
Set *tSendMin*	= 0 s
Set *Unblock*	= *Disabled* (Set to *NoRestart* if Unblocking scheme with no alarm for loss of guard is to be used. Set to *Restart* if Unblocking scheme with alarm for loss of guard is to be used)
Set *tSecurity*	= 0.035 s

15.1.3.2 Permissive underreaching scheme

Set *Operation*	= *Enabled*
Set *SchemeType*	= *Permissive UR*
Set *tCoord*	= 0 ms

Table continues on next page

Set *tSendMin*	= 0.1 s
Set *Unblock*	= *Disabled*
Set *tSecurity*	= 0.035 s

15.1.3.3 Permissive overreaching scheme

Set *Operation*	= *Enabled*
Set *Scheme type*	= *Permissive OR*
Set *tCoord*	= 0 ms
Set *tSendMin*	= 0.1 s (0 s in parallel line applications)
Set *Unblock*	= *Disabled*
Set *tSecurity*	= 0.035 s

15.1.3.4 Unblocking scheme

Set *Unblock*	= *Restart* (Loss of guard signal will give both trip and alarm Choose *NoRestart* if only trip is required)
Set *tSecurity*	= 0.035 s

15.1.3.5 Intertrip scheme

Set *Operation*	= *Enabled*
Set *SchemeType*	= *Intertrip*
Set *tCoord*	50 ms (10 ms + maximal transmission time)
Set *tSendMin*	= 0.1 s (0 s in parallel line applications)
Set *Unblock*	= *Disabled*
Set *tSecurity*	= 0.015 s

15.2 Phase segregated scheme communication logic for distance protection ZC1PPSCH (85)

15.2.1 Identification

Function description	IEC 61850 identification	IEC 60617 identification	ANSI/IEEE C37.2 device number
Phase segregated Scheme communication logic for distance protection	ZC1PPSCH	-	85

15.2.2 Application

To achieve fast fault clearing for a fault on the part of the line not covered by the instantaneous zone1, the stepped distance protection function can be supported with logic that uses communication channels.

For the Phase segregated scheme communication logic for distance protection (ZC1PPSCH ,85) three channels in each direction, which can transmit an on/off signal is required.

The performance and security of this function is directly related to the transmission channels speed, and security against false or lost signals. Special communication channels are used for this purpose. When power line carrier is used for communication, these special channels are strongly recommended due to the communication disturbance caused by the primary fault.

Communication speed, or minimum time delay, is always of utmost importance because the purpose for using communication is to improve the total tripping speed of the scheme. To avoid false signals that could cause false tripping, it is necessary to pay attention to the security of the communication channel. At the same time, it is important pay attention to the communication channel dependability to ensure that proper signals are communicated during power system faults, the time during which the protection schemes must perform their tasks flawlessly.

The logic supports the following communications schemes:

- blocking scheme
- permissive schemes (overreach and underreach)
- direct intertrip

A permissive scheme is inherently faster and has better security against false tripping than a blocking scheme. On the other hand, permissive scheme depends on a received CR signal for a fast trip, so its dependability is lower than that of a blocking scheme.

When single-pole tripping is required on parallel lines, an unwanted three-pole trip can occur for simultaneous faults near the line end (typical last 20%). Simultaneous faults are one fault on each of the two lines but in different phases, see figure 376. When simultaneous faults occur, the phase selectors at the remote protection IED - relative to the faults, see the A side in figure 376 - cannot discriminate between the fault on the protected line and on the parallel line. The phase selector must be set to cover the whole line with a margin and will also detect a fault on the parallel line. Instantaneous phase-selective tripping for simultaneous faults close to line end is not possible with the information that is available locally in the remote protection IEDs relative to the faults. The protection IED near the faults detects the faults on the protected line as a forward fault, and on the parallel line in reverse direction. The directional phase selector in the two IEDs near the faults can discriminate between the faults and issue correct single-pole tripping commands.

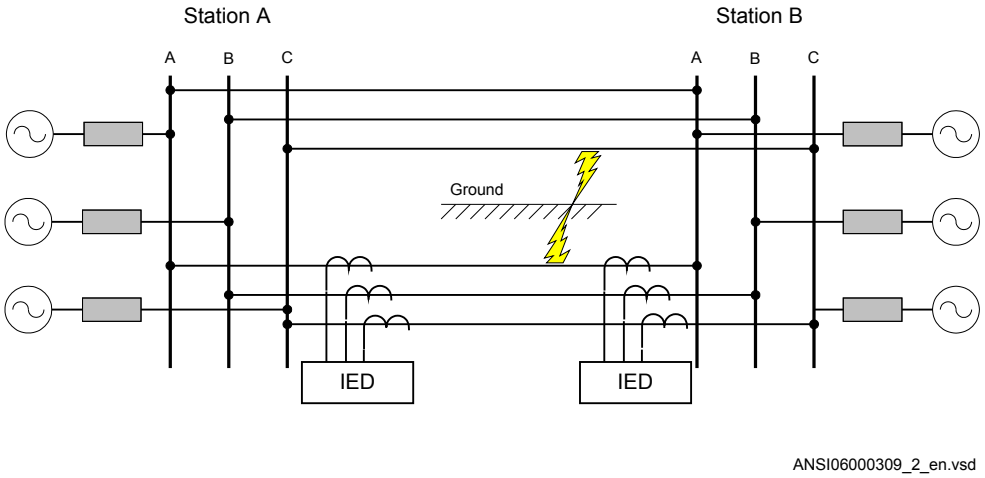

Figure 376: Simultaneous faults on two parallel lines

By using phase-segregated channels for the communication scheme, the correct phase information in the protection IED near the faults can be transferred to the other side protection IED. A correct single-pole trip can be achieved on both lines and at both line IEDs.

ZC1PPSCH (85) requires three individual channels between the protection IEDs on each line in both directions. In case of single-phase faults, only one channel is activated at a time. But in case of multi-phase faults, two or three channels are activated simultaneously.

The following descriptions of the schemes generally presents one of the three identical phases.

When only one channel is available in each direction, use the optionally available three phase communication scheme logic ZCPSCH (85). Note that this logic can issue an unwanted three-pole trip at the described simultaneous faults close to one line end.

15.2.2.1 Blocking scheme

In blocking scheme a reverse looking zone is used to send a block signal to remote end to block an overreaching zone. Since the scheme is sending the blocking signal during conditions where the protected line is healthy, it is common to use the line itself as communication media (PLC). The scheme can be used on all types of line length.

The blocking scheme is very dependable because it will operate for faults anywhere on the protected line if the communication channel is out of service. Conversely, it is less secure than permissive schemes because it will trip for external faults within the reach of the tripping function if the communication channel is out of service. Inadequate speed or dependability can cause spurious tripping for external faults. Inadequate security can cause delayed tripping for internal faults. To secure that the carrier send signal will arrive before the zone used in the communication scheme will trip, the trip is released first after the time delay *tCoord* has elapsed. The setting of *tCoord* must be set longer than the maximum transmission time of the channel. A security margin of at least 10 ms should be considered.

The timer *tSendMin* for prolonging the carrier send signal is proposed to set to zero in blocking schemes.

15.2.2.2 Permissive schemes

In permissive scheme permission to trip is sent from local end to remote end(s) that is, protection at local end have detected a fault on the protected object. The received signal(s) is combined with an overreaching zone and gives an instantaneous trip if the received signal is present during the time the chosen zone is detected a fault in forward direction. Either end may send a permissive (or command) signal to trip to the other end(s), and the teleprotection equipment need to be able to receive while transmitting.

Depending on if the sending signal(s) is issued by underreaching or overreaching zone, it is divided into Permissive underreach (PUR) or Permissive overreach (POR) scheme.

Permissive underreach scheme

Permissive underreach scheme is not suitable to use on short line length due to difficulties for distance protection measurement in general to distinguish between internal and external faults in those applications.

The underreaching zones at local and remote end(s) must overlap in reach to prevent a gap between the protection zones where faults would not be detected. If the underreaching zone do not meet required sensitivity due to for instance fault infeed from remote end blocking or permissive overreach scheme should be considered.

The carrier received signal (CR) must be received when the overreaching zone is still activated to achieve an instantaneous trip. In some cases, due to the fault current distribution, the overreaching zone can operate only after the fault has been cleared at the IED nearest to the fault.

There is a certain risk that in case of a trip from an independent tripping zone, the zone issuing the carrier send signal (CS) resets before the overreaching zone has operated at the remote IED. To assure a sufficient duration of the received signal (CR), the send signal (CS), can be prolonged by a *tSendMin* reset timer. The recommended setting of *tSendMin* is 100 ms. Since the received communication signal is combined with the output from an overreaching zone, there is less concern about false signal causing an incorrect trip. Therefore set the timer *tCoord* to zero. Failure of the communication channel does not affect the selectivity, but delays tripping at one end(s) for certain fault locations.

Permissive overreach scheme

In permissive overreach scheme there is an overreaching zone that issue the carrier send signal. At remote end the received signal together with activating of an overreaching zone gives instantaneous trip of the protected object. The overreaching zone used in the teleprotection scheme must be activated at the same time as the received signal is present. The scheme can be used for all type line lengths.

In permissive overreach schemes, the communication channel plays an essential roll to obtaining fast tripping at both ends. Failure of the communication channel may affect the selectivity and delay tripping at one end at least, for faults anywhere along the protected circuit. Teleprotection operating in permissive overreach scheme must beside the general requirement of fast and secure operation also requirement on dependability must be considered. Inadequate security can cause unwanted tripping for external faults. Inadequate speed or dependability can cause delayed tripping for internal faults or even unwanted operations.

This scheme may use virtually any communication media that is not adversely affected by electrical interference from fault generated noise or by electrical phenomena, such as lightning, that cause faults. Communication media that uses metallic path are particularly subjected to this type of interference, therefore, they must be properly shielded or otherwise designed to provide an adequate communication signal during

power system faults. At the permissive overreaching scheme, the carrier send signal (CS) might be issued in parallel both from an overreaching zone and an underreaching, independent tripping zone. The CS signal from the overreaching zone must not be prolonged while the CS signal from zone1 can be prolonged. To secure correct operations of current reversal logic in case of parallel lines, when applied, the carrier send signal CS shall not be prolonged. So set the *tSendMin* to zero in this case. There is no need to delay the trip at receive of the carrier signal, so set the timer *tCoord* to zero.

Unblocking scheme

Unblocking scheme cannot be used at ZC1PPSCH (85) as a failure of the communication channel cannot give any information about which phase/phases have a fault.

15.2.2.3 Intertrip scheme

In some power system applications, there is a need to trip the remote end breaker immediately from local protections. This applies, for instance, when transformers or reactors are connected to the system without circuit-breakers or for remote tripping following operation of Breaker failure protection (CCRBRF, 50BF).

In intertrip scheme, the carrier send signal is initiated by an underreaching zone or from an external protection (transformer or reactor protection). At remote end, the received signals initiate a trip without any further protection criteria. To limit the risk for unwanted trip due to spurious sending of signals, the timer *tCoord* should be set to 10-30 ms dependant on type and security of the communication channel.

The general requirement for teleprotection equipment operating in intertripping applications is that it should be very secure and very dependable, since both inadequate security and dependability may cause unwanted operation. In some applications the equipment shall be able to receive while transmitting, and commands may be transmitted over longer time period than for other teleprotection systems.

15.2.3 Setting guidelines

The parameters for the Phase segregated scheme communication logic for distance protection function ZC1PPSCH (85) are set via the local HMI or PCM600.

Configure the zones used for the CS carrier send and for scheme communication tripping by using the Application Configuration tool. The recommended settings of *tCoord* timer are based on maximal recommended transmission time for analog channels according to IEC 60834-1. It is recommended to coordinate the proposed settings with actual performance for the teleprotection equipment to get optimized settings.

15.2.3.1 Permissive underreache scheme

Set *Operation*	=	*On*
Set *Scheme type*	=	*Permissive UR*
Set *tCoord*	=	0 ms
Set *tSendMin*	=	0.1 s

15.2.3.2 Permissive overreach scheme

Set *Operation*	=	*On*
Set *Scheme type*	=	*Permissive OR*
Set *tCoord*	=	0 ms
Set *tSendMin*	=	0.1 s

15.2.3.3 Blocking scheme

Set *Operation*	=	*On*
Set *Scheme type*	=	*Blocking*
Set *tCoord*	=	25 ms (10 ms + maximal transmission time)
Set *tSendMin*	=	0 s

15.2.3.4 Intertrip scheme

Set *Operation*	=	*On*
Set *Scheme type*	=	*Intertrip*
Set *tCoord*	=	50 ms (10 ms + maximal transmission time)
Set *tSendMin*	=	0.1 s

15.3 Current reversal and Weak-end infeed logic for distance protection 3-phase ZCRWPSCH (85)

15.3.1 Identification

Function description	IEC 61850 identification	IEC 60617 identification	ANSI/IEEE C37.2 device number
Current reversal and weak-end infeed logic for distance protection 3-phase	ZCRWPSCH	-	85

15.3.2 Application

15.3.2.1 Current reversal logic

If parallel lines are connected to common buses at both terminals, overreaching permissive communication schemes can trip unselectable due to current reversal. The unwanted tripping affects the healthy line when a fault is cleared on the parallel line. This lack of security results in a total loss of interconnection between the two buses.

To avoid this kind of disturbances, a fault current reversal logic (transient blocking logic) can be used.

The unwanted operations that might occur can be explained by looking into Figure 377 and Figure 378. Initially the protection A2 at A side will detect a fault in forward direction and send a communication signal to the protection B2 at remote end, which is measuring a fault in reverse direction.

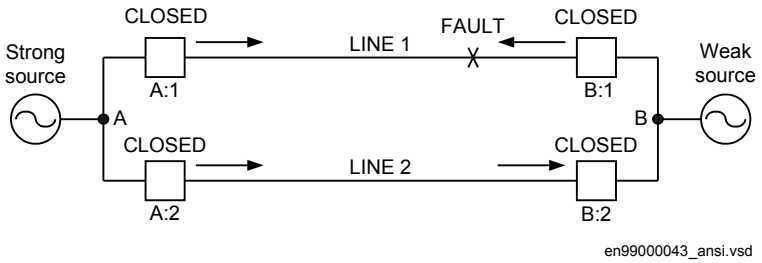

Figure 377: Current distribution for a fault close to B side when all breakers are closed

When the breaker B1 opens for clearing the fault, the fault current through B2 bay will invert. If the communication signal has not reset at the same time as the distance protection function used in the teleprotection scheme has switched on to forward direction, we will have an unwanted operation of breaker B2 at B side.

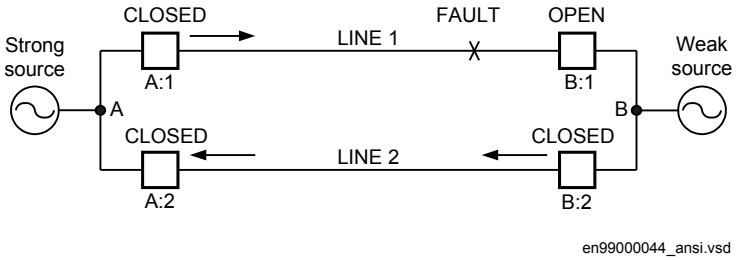

Figure 378: Current distribution for a fault close to B side when breaker B1 has opened

To handle this the send signal CS or CSLn from B2 is held back until the reverse zone IRVLn has reset and the *tDelayRev* time has been elapsed. To achieve this the reverse zone on the distance protection shall be connected to input IRV and the output IRVL shall be connected to input BLKCS on the communication function block ZCPSCH.

The function can be blocked by activating the input IRVBLK or the general BLOCK input.

15.3.2.2 Weak-end infeed logic

Permissive communication schemes can basically operate only when the protection in the remote IED can detect the fault. The detection requires a sufficient minimum fault current, normally >20% of . The fault current can be too low due to an open breaker or low short-circuit power of the source. To overcome these conditions, weak-end infeed (WEI) echo logic is used. The fault current can also be initially too low due to the fault current distribution. Here, the fault current increases when the breaker opens at the strong terminal, and a sequential tripping is achieved. This requires a detection of the fault by an independent tripping zone 1. To avoid sequential tripping as described, and when zone 1 is not available, weak-end infeed tripping logic is used. The weak end infeed function only works together with permissive overreach communication schemes as the carrier send signal must cover the hole line length.

The WEI function sends back (echoes) the received signal under the condition that no fault has been detected on the weak-end by different fault detection elements (distance protection in forward and reverse direction).

The WEI function can be extended to trip also the breaker in the weak side. The trip is achieved when one or more phase voltages are low during an echo function.

In case of single-pole tripping, the phase voltages are used as phase selectors together with the received signal CRLn.

Together with the blocking teleprotection scheme some limitations apply:

- Only the trip part of the function can be used together with the blocking scheme. It is not possible to use the echo function to send the echo signal to the remote line IED. The echo signal would block the operation of the distance protection at the remote line end and in this way prevents the correct operation of a complete protection scheme.
- A separate direct intertrip channel must be arranged from remote end when a trip or accelerated trip is given there. The intertrip receive signal is connect to input CRL.
- The WEI function shall be set to *WEI=Echo&Trip*. The WEI function block will then give phase selection and trip the local breaker.

Avoid using WEI function at both line ends. It shall only be activated at the weak-end.

15.3.3 Setting guidelines

The parameters for the current reversal logic and the weak-end infeed logic (WEI) function are set via the local HMI or PCM600.

Common base IED values for primary current (*IBase*), primary voltage (*VBase*) and primary power (*SBase*) are set in a Global base values for settings function GBASVAL.

GlobalBaseSel: It is used to select a GBASVAL function for reference of base values.

15.3.3.1 Current reversal logic

Set *CurrRev* to *Enabled* to activate the function.

Set *tDelayRev* timer at the maximum reset time for the communication equipment that gives the carrier receive (CRL) signal plus 30 ms. A minimum setting of 40 ms is recommended, typical 60 ms.

A long *tDelayRev* setting increases security against unwanted tripping, but delay the fault clearing in case of a fault developing from one line that evolves to the other one. The probability of this type of fault is small. Therefore set *tDelayRev* with a good margin.

Set the pick-up delay *tPickUpRev* to <80% of the breaker operate time, but with a minimum of 20 ms.

15.3.3.2 Weak-end infeed logic

Set *WEI* to *Echo*, to activate the weak-end infeed function with only echo function.

Set *WEI* to *Echo&Trip* to obtain echo with trip.

Set *tPickUpWEI* to *10* ms, a short delay is recommended to avoid that spurious carrier received signals will activate WEI and cause unwanted carrier send (ECHO) signals.

Set the voltage criterion *PU27PP* and *PU27PN* for the weak-end trip to 70% of the system base voltage *VBase*. The setting should be below the minimum operate voltage of the system but above the voltage that occurs for fault on the protected line. The phase-to-phase elements must be verified to not operate for phase to ground faults.

When single pole tripping is required a detailed study of the voltages at phase-to-phase respectively phase-to-ground faults, at different fault locations, is normally required.

15.4 Current reversal and weak-end infeed logic for phase segregated communication ZC1WPSCH (85)

15.4.1 Identification

Function description	IEC 61850 identification	IEC 60617 identification	ANSI/IEEE C37.2 device number
Current reversal and weak-end infeed logic for phase segregated communication	ZC1WPSCH	-	85

15.4.2 Application

Current reversal logic

If parallel lines are connected to common buses at both terminals, overreaching permissive communication schemes can trip unselectable due to current reversal. The unwanted tripping affects the healthy line when a fault is cleared on the other line. This lack of security results in a total loss of interconnection between the two buses.

To avoid this kind of disturbances, fault current reversal logic (transient blocking logic) can be used.

The unwanted operations that might occur can be explained by looking into Figure 379 and Figure 380. Assume that the fault has been taken place close to breaker B1. At first, the protection A2 at A side will detect a fault in forward direction and send a communication signal to the protection B2 at remote end, which is measuring a fault in reverse direction.

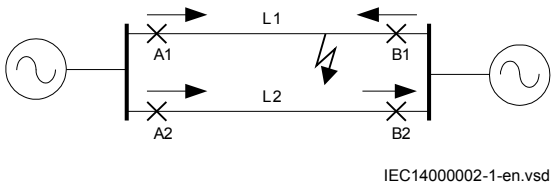

Figure 379: Current distribution for a fault close to B side when all breakers are closed

When the breaker B1 opens for clearing the fault, the fault current through B2 bay will invert. If the communication signal has not reset at the same time as the distance protection function used in the teleprotection scheme has switched on to forward direction, we will have an unwanted operation of breaker B2 at B side.

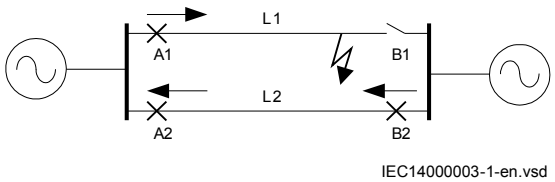

Figure 380: Current distribution for a fault close to B side when breaker B1 is opened

To handle this, the send signal CS or CSLx from B2 is held back until the reverse zone IRVLx has reset and the *tDelayRev* time has elapsed. To achieve this, the reverse zone on the distance protection shall be connected to input IRVLx and the output IRVOPLx shall be connected to input BLKCS on the communication function block ZCPSCH.

Weak-end infeed logic

Permissive communication schemes can basically operate only when the protection in the remote IED can detect the fault. The detection requires a sufficient minimum fault current, normally >20% of Ir. The fault current can be too low due to an open breaker or low short-circuit power of the source. To overcome these conditions, weak-end infeed (WEI) echo logic is used. The fault current can also be initially too low due to the fault current distribution. Here, the fault current increases when the breaker opens in the strong terminal, and a sequential tripping is achieved. This requires a detection of the fault by an independent tripping zone 1. To avoid sequential tripping as described, and when zone 1 is not available, weak-end infeed tripping logic is used.

The WEI function sends back (echoes) the received signal under the condition that no fault has been detected on the weak-end by different fault detection elements (distance protection in forward and reverse direction).

The WEI function can be extended to trip also the breaker in the weak side. The trip is achieved when one or more phase voltages are low during an echo function.

Together with the blocking teleprotection scheme some limitations apply:

- Only the trip part of the function can be used together with the blocking scheme. It is not possible to use the echo function to send the echo signal to the remote line IED. The echo signal would block the operation of the distance protection at the remote line end and in this way prevents the correct operation of a complete protection scheme.
- A separate direct intertrip channel must be arranged from remote end when a trip or accelerated trip is given there. The intertrip receive signal is connected to input CRL.
- The WEI function shall be set to *OperationWEI=Echo&Trip*. The WEI function block will then give phase selection and trip the local breaker.

15.4.3 Setting guidelines

The parameters for the current reversal and weak-end infeed logic for phase segregated communication function (ZC1WPSCH) are set via the local HMI or PCM600.

Common base IED values for primary current (*IBase*), primary voltage (*UBase*) and primary power (*SBase*) are set in Global base values for settings function *GBASVAL*.

GlobalBaseSel: It is used to select a *GBASVAL* function for reference of base values.

Current reversal logic

Set *OperCurrRev* to *On* to activate the function.

Set *tDelayRev* timer at the maximum reset time for the communication equipment that gives the carrier receive (CRLx) signal plus 30ms. A minimum setting of *40ms* is recommended, typical *60ms*.

A long *tDelayRev* setting increases security against unwanted tripping, but delay the fault clearing in case of a fault developing from one line to involve the other one. The probability of this type of fault is small. Therefore set *tDelayRev* with a good margin.

Set the pickup delay *tPickUpRev* to <80% of the breaker operate time, but with a minimum of *20ms*.

Weak-end infeed logic

Set *OperationWEI* to *Echo*, to activate the weak-end infeed function with only echo function.

Set *OperationWEI* to *Echo&Trip* to obtain echo with trip.

Set *tPickUpWEI* to *10* ms, a short delay is recommended to avoid that spurious carrier received signals will activate WEI and cause unwanted communications.

Set the voltage criterion *UPP*< and *UPE*< for the weak-end trip to *70*% of the system base voltage *UBase*. The setting should be below the minimum operate voltage of the system but above the voltage that occurs for fault on the protected line. The phase-to-phase elements must be verified to not operate for phase to earth faults.

When single phase tripping is required a detailed study of the voltages at phase-to-phase respectively phase-to-earth faults, at different fault locations, is normally required.

15.5 Local acceleration logic ZCLCPSCH

15.5.1 Identification

Function description	IEC 61850 identification	IEC 60617 identification	ANSI/IEEE C37.2 device number
Local acceleration logic	ZCLCPSCH	-	-

15.5.2 Application

The local acceleration logic (ZCLCPSCH) is used in those applications where conventional teleprotection scheme is not available (no communication channel), but the user still require fast clearance for faults on the whole line.

This logic enables fast fault clearing during certain conditions, but naturally, it can not fully replace a teleprotection scheme.

The logic can be controlled either by the autorecloser (zone extension) or by the loss-of-load current (loss-of-load acceleration).

The loss-of-load acceleration gives selected overreach zone permission to operate instantaneously after check of the different current criteria. It can not operate for three-phase faults.

15.5.3 Setting guidelines

The parameters for the local acceleration logic functions are set via the local HMI or PCM600.

Set *ZoneExtension* to *Enabled* when the first trip from selected overreaching zone shall be instantaneous and the definitive trip after autoreclosure a normal time-delayed trip.

Set *LossOfLoad* to *Enabled* when the acceleration shall be controlled by loss-of-load in healthy phase(s).

LoadCurr must be set below the current that will flow on the healthy phase when one or two of the other phases are faulty and the breaker has opened at remote end (three-phase). Calculate the setting according to equation 556.

$$LoadCurr = \frac{0.5 \cdot I_{Load\ min}}{I_{Base}}$$

(Equation 556)

where:

ILoadmin is the minimum load current on the line during normal operation conditions.

The timer *tLoadOn* is used to increase the security of the loss-of-load function for example to avoid unwanted release due to transient inrush current when energizing the line power transformer. The loss-of-load function will be released after the timer *tLoadOn* has elapsed at the same time as the load current in all three phases are above the setting *LoadCurr*. In normal acceleration applications there is no need for delaying the release, so set the *tLoadOn* to zero.

The drop-out timer *tLoadOff* is used to determine the window for the current release conditions for Loss-of-load. The timer is by default set to 300ms, which is judged to be enough to secure the current release.

The setting of the minimum current detector, *MinCurr*, should be set higher than the unsymmetrical current that might flow on the non faulty line, when the breaker at remote end has opened (three-phase). At the same time it should be set below the minimum load current transfer during normal operations that the line can be subjected to. By default, *MinCurr* is set to 5% of *IBase*.

The pick-up timer *tLowCurr* determine the window needed for pick-up of the minimum current value used to release the function. The timer is by default set to 200 ms, which is judged to be enough to avoid unwanted release of the function (avoid unwanted trip).

15.6 Scheme communication logic for residual overcurrent protection ECPSCH (85)

15.6.1 Identification

Function description	IEC 61850 identification	IEC 60617 identification	ANSI/IEEE C37.2 device number
Scheme communication logic for residual overcurrent protection	ECPSCH	-	85

15.6.2 Application

To achieve fast fault clearance of ground faults on the part of the line not covered by the instantaneous step of the residual overcurrent protection, the directional residual overcurrent protection can be supported with a logic that uses communication channels.

One communication channel is used in each direction, which can transmit an on/off signal if required. The performance and security of this function is directly related to the transmission channel speed and security against false or lost signals.

In the directional scheme, information of the fault current direction must be transmitted to the other line end.

With directional comparison in permissive schemes, a short operate time of the protection including a channel transmission time, can be achieved. This short operate time enables rapid autoreclosing function after the fault clearance.

During a single-phase reclosing cycle, the autoreclosing device must block the directional comparison ground-fault communication scheme.

The communication logic module enables blocking as well as permissive under/overreaching schemes. The logic can also be supported by additional logic for weak-end infeed and current reversal, included in the Current reversal and weak-end infeed logic for residual overcurrent protection (ECRWPSCH, 85) function.

Metallic communication paths adversely affected by fault generated noise may not be suitable for conventional permissive schemes that rely on signal transmitted during a protected line fault. With power line carrier, for example, the communication signal may be attenuated by the fault, especially when the fault is close to the line end, thereby disabling the communication channel.

To overcome the lower dependability in permissive schemes, an unblocking function can be used. Use this function at older, less reliable, power line carrier (PLC) communication, where the signal has to be sent through the primary fault. The

unblocking function uses a guard signal CRG, which must always be present, even when no CR signal is received. The absence of the CRG signal during the security time is used as a CR signal. This also enables a permissive scheme to operate when the line fault blocks the signal transmission. Set the *tSecurity* to 35 ms.

15.6.3 Setting guidelines

The parameters for the scheme communication logic for residual overcurrent protection function are set via the local HMI or PCM600.

The following settings can be done for the scheme communication logic for residual overcurrent protection function:

Operation: *Disabled* or *Enabled*.

SchemeType: This parameter can be set to *Off* , *Intertrip*, *Permissive UR*, *Permissive OR* or *Blocking*.

tCoord: Delay time for trip from ECPSCH (85) function. For Permissive under/overreaching schemes, this timer shall be set to at least 20 ms plus maximum reset time of the communication channel as a security margin. For Blocking scheme, the setting should be > maximum signal transmission time +10 ms.

Unblock: Select *Off* if unblocking scheme with no alarm for loss of guard is used. Set to *Restart* if unblocking scheme with alarm for loss of guard is used.

15.7 Current reversal and weak-end infeed logic for residual overcurrent protection ECRWPSCH (85)

15.7.1 Identification

Function description	IEC 61850 identification	IEC 60617 identification	ANSI/IEEE C37.2 device number
Current reversal and weak-end infeed logic for residual overcurrent protection	ECRWPSCH	-	85

15.7.2 Application

15.7.2.1 Fault current reversal logic

Figure 381 and Figure 382 show a typical system condition, which can result in a fault current reversal.

Assume that fault is near the B1 breaker. B1 Relay sees the fault in Zone1 and A1 relay identifies the fault in Zone2.

Note that the fault current is reversed in line L2 after the breaker B1 opening.

It can cause an unselective trip on line L2 if the current reversal logic does not block the permissive overreaching scheme in the IED at B2.

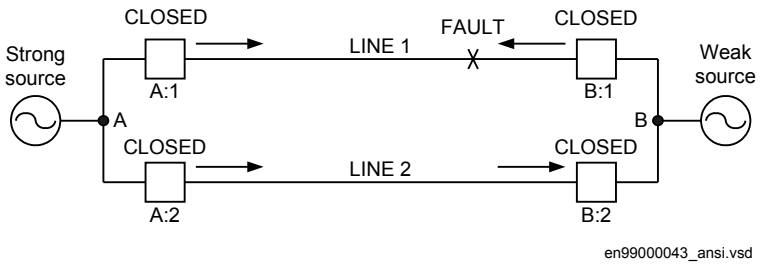

Figure 381: Current distribution for a fault close to B side when all breakers are closed

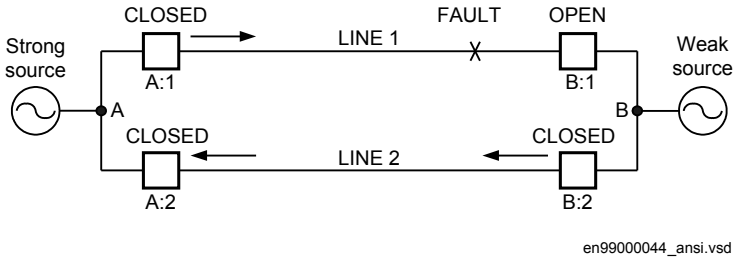

Figure 382: Current distribution for a fault close to B side when breaker at B1 is opened

When the breaker on the parallel line operates, the fault current on the healthy line is reversed. The IED at B2 recognizes the fault in forward direction from reverse direction before breaker operates. As IED at B2 already received permissive signal from A2 and IED at B2 is now detecting the fault as forward fault, it will immediately trip breaker at B2. To ensure that tripping at B2 should not occur, the permissive overreaching function at B2 needs to be blocked by IRVL till the received permissive signal from A2 is reset.

The IED at A2, where the forward direction element was initially activated, must reset before the send signal is initiated from B2. The delayed reset of output signal IRVL also ensures the send signal from IED B2 is held back till the forward direction element is reset in IED A2.

15.7.2.2 Weak-end infeed logic

Figure 383 shows a typical system condition that can result in a missing operation. Note that there is no fault current from node B. This causes that the IED at B cannot detect the fault and trip the breaker in B. To cope with this situation, a selectable weak-end infeed logic is provided for the permissive overreaching scheme.

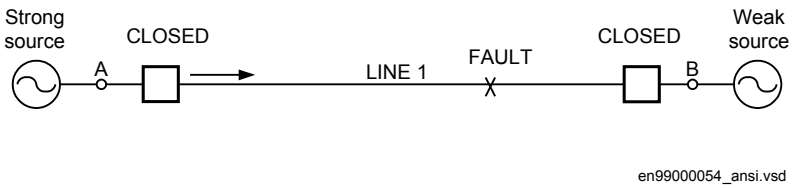

Figure 383: Initial condition for weak-end infeed

15.7.3 Setting guidelines

The parameters for the current reversal and weak-end infeed logic for residual overcurrent protection function are set via the local HMI or PCM600.

Common base IED values for primary current (*IBase*), primary voltage (VBase) and primary power (*SBase*) are set in a Global base values for settings function GBASVAL.

GlobalBaseSel: It is used to select a GBASVAL function for reference of base values.

15.7.3.1 Current reversal

The current reversal function is set on or off by setting the parameter *CurrRev* to *Enabled* or *Disabled*. Time delays shall be set for the timers *tPickUpRev* and *tDelayRev*.

tPickUpRev is chosen shorter (<80%) than the breaker opening time, but minimum 20 ms.

tDelayRev is chosen at a minimum to the sum of protection reset time and the communication reset time. A minimum *tDelayRev* setting of 40 ms is recommended.

The reset time of the directional residual overcurrent protection (EF4PTOC) is typically 25 ms. If other type of residual overcurrent protection is used in the remote line end, its reset time should be used.

The signal propagation time is in the range 3 – 10 ms/km for most types of communication media. In communication networks small additional time delays are

added in multiplexers and repeaters. Theses delays are less than 1 ms per process. It is often stated that the total propagation time is less than 5 ms.

When a signal picks-up or drops out there is a decision time to be added. This decision time is highly dependent on the interface between communication and protection used. In many cases an external interface (teleprotection equipment) is used. This equipment makes a decision and gives a binary signal to the protection device. In case of analog teleprotection equipment typical decision time is in the range 10 – 30 ms. For digital teleprotection equipment this time is in the range 2 – 10 ms.

If the teleprotection equipment is integrated in the protection IED the decision time can be slightly reduced.

The principle time sequence of signaling at current reversal is shown.

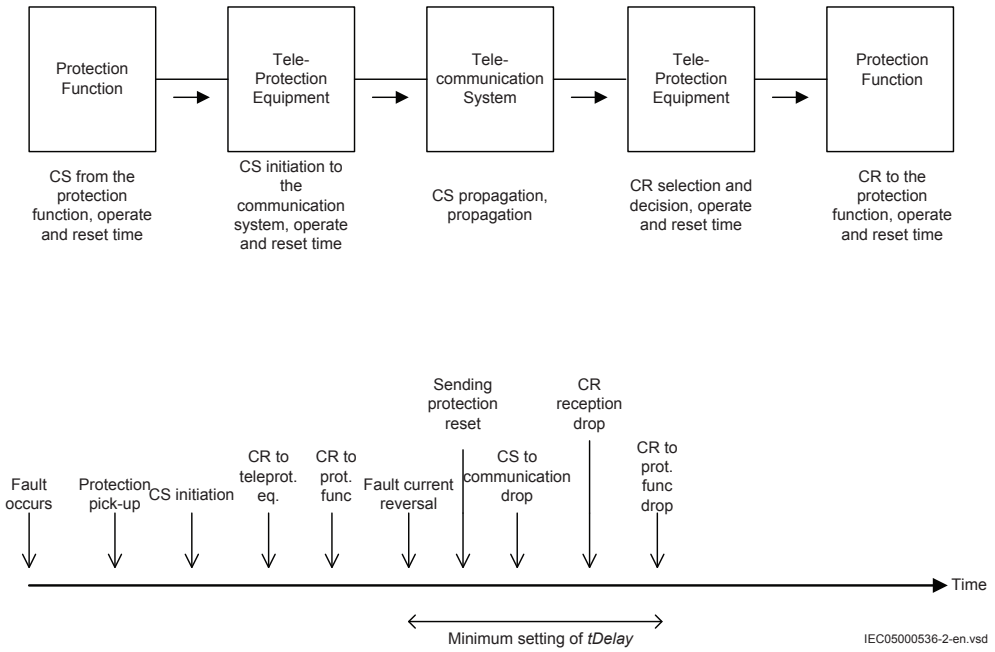

Figure 384: Time sequence of signaling at current reversal

15.7.3.2 Weak-end infeed

The weak-end infeed can be set by setting the parameter *WEI* to *Off*, *Echo* or *Echo & Trip*. Operating zero sequence voltage when parameter *WEI* is set to *Echo & Trip* is set with 3V0PU.

The zero sequence voltage for a fault at the remote line end and appropriate fault resistance is calculated.

To avoid unwanted trip from the weak-end infeed logic (if spurious signals should occur), set the operate value of the broken delta voltage level detector (3V0) higher than the maximum false network frequency residual voltage that can occur during normal service conditions. The recommended minimum setting is two times the false zero-sequence voltage during normal service conditions.

15.8 Direct transfer trip logic

15.8.1 Application

The main purpose of the direct transfer trip (DTT) scheme is to provide a local criterion check on receiving a transfer trip signal from remote end before tripping the local end CB. A typical application for this scheme is a power transformer directly connected, without circuit breaker, to the feeding line. Suppose that an internal symmetrical or non-symmetrical transformer fault appears within the protective area of the transformer differential protection. The line protection will, in some cases, not recognize the fault. The transformer differential protection operates for the internal fault and initiates a trip of the secondary side circuit breaker. It also sends the carrier signal to the remote line end in order to open the line circuit breaker.

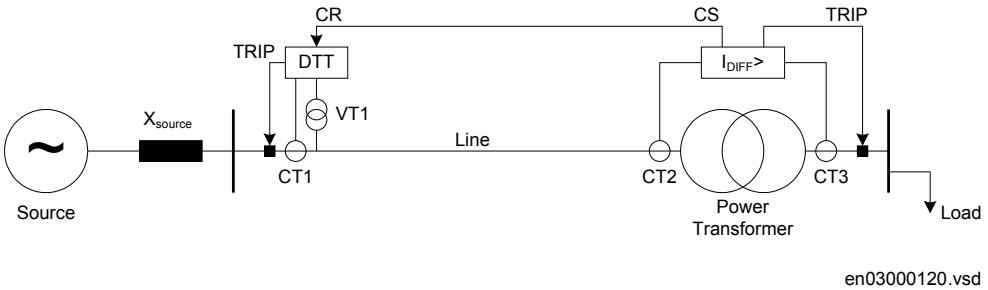

Figure 385:

Usually carrier receive (CR) signal trips the line circuit breaker directly in normal direct transfer trip scheme (DTT) but in such cases security would be compromised, due to the risk of a false communication signal. A false CR signal could unnecessarily trip the line. Therefore, a local criterion is used, to provide an additional trip criterion, at the same location as the line circuit breaker. The local criterion must detect the abnormal conditions at the end of the protected line and transformer and permit the CR signal to trip the circuit breaker.

Another application is a line connected shunt reactor, where the reactor is solidly connected to the line. Shunt reactors are generally protected by differential protection,

which operates the local line circuit breaker and sends a transfer trip command to the remote line end.

The line protection in the remote end is much less sensitive than the differential protection and will only operate for low impedance reactor faults very close to the high voltage terminal. To avoid frequent line trips at the local end due to false transfer trip signals, a local criterion check is required to be added at the local end.

The trip signal from local criterion will ensure the fault at the remote end and release the trip signal to the local side circuit breaker. The local criterion must detect the abnormal conditions and permit the CR signal to trip the circuit breaker.

DTT scheme comprises following local criteria checks as shown in Figure 386.

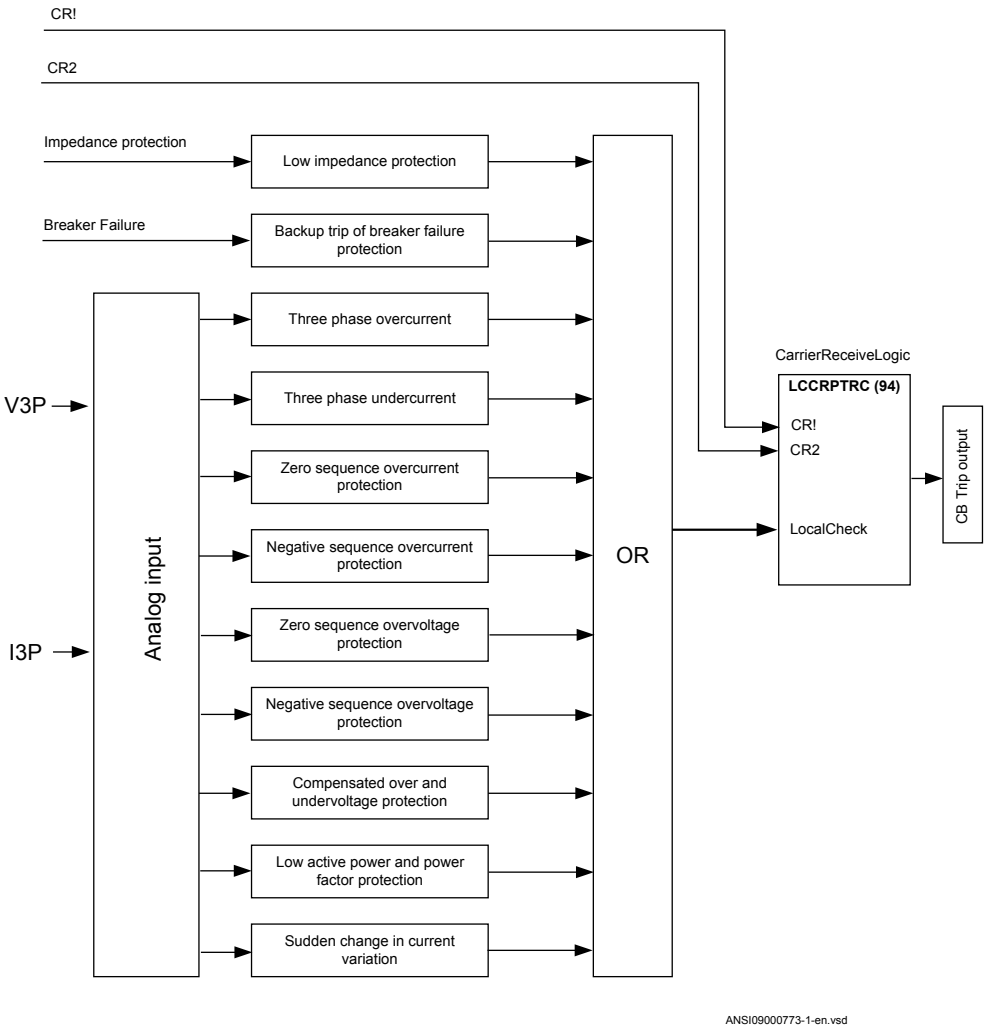

Figure 386: DTT scheme

15.8.2 Setting guidelines

Setting guidelines for Direct transfer trip functions are outlined in the following sections.

15.8.3 Low active power and power factor protection LAPPGAPC (37_55)

15.8.3.1 Identification

Function description	IEC 61850 identification	IEC 60617 identification	ANSI/IEEE C37.2 device number
Low active power and power factor protection	LAPPGAPC	-	37_55

15.8.3.2 Application

Low active power and power factor protection (LAPPGAPC, 37_55) is one of the local criteria to be checked in direct transfer trip (DTT) scheme. In LAPPGAPC (37_55), active power and power factor are calculated from the voltage and current values at this end. On detection of low active power or low power factor condition, the trip output will be set. All the calculation and comparison are done per phase.

If there is a fault and the remote end circuit breaker is tripped, a carrier signal is sent to the local end and the active power in respective phases will decrease. Hence, detection of low active power in at least one of the phases would be one of the factors to ascertain the fault at other end.

The function has two modes, '1 out of 3' and '2 out of 3'. '1 out of 3' mode ensures that there is low active power in at least one of the three phases, while the '2 out of 3' mode the low power is ensured in at least two phases simultaneously before sending the trip signal.

Line which is tripped at the remote end will have low active power flowing through it which also results in low power factor in the respective phase. A low power factor criterion could also be an added check of the local criterion in DTT. In this function phase wise power factor is calculated, and a comparison is made for the low power factor condition to give phase segregated start and trip.

15.8.3.3 Setting guidelines

GlobalBaseSel: Selects the global base value group used by the function to define (*IBase*), (*VBase*) and (*SBase*).

OperationLAP: Used to set the low power function *Enabled* or *Disabled*.

OpModeSel: Can be set *2 out of 3* or *1 out of 3*. If *1 out of 3* is set, the function will send TRIP signal if one or more phases have low power. If *2 out of 3* is set, the function will send TRIP signal if two or more phases have low power. When the remote breaker has opened, there should theoretically be zero power at the protection measurement point. However, when fault current is fed to the fault point the power loss in the fault will be detected. For operation for all unsymmetrical faults *1 out of 3* should be selected.

PU_LAP: Level of low active power detection, given in % of *SBase*. This parameter should be set as low as possible to avoid activation during low load conditions at undisturbed network operation. The measurement is blocked for current levels below 3 % of *IBase* and 30% of *VBase*. All outputs are blocked.

tdelay_LAP: Time delay for trip in case of low active power detection.

OperationLPF: Used to set the low power factor function *Enabled* or *Disabled*.

PU_LPF: Level of low power factor detection. The setting should be set lower than the lowest power factor at undisturbed network operation. A value lower than *0.4* is normally sufficient.

tdelay_LPD: Time delay for trip in case of low power factor detection.

15.8.4 Compensated over and undervoltage protection COUVGAPC (59_27)

15.8.4.1 Identification

Function description	IEC 61850 identification	IEC 60617 identification	ANSI/IEEE C37.2 device number
Compensated over and undervoltage protection	COUVGAPC	-	59_27

15.8.4.2 Application

Compensated over and undervoltage protection (COUVGAPC, 59_27) function calculates the remote end voltage of the transmission line utilizing local measured

voltage, current and with the help of transmission line parameters, that is, line resistance, reactance, capacitance and local shunt reactor.

For protection of long transmission line for in zone faults this function can be incorporated with other local criteria checks within direct transfer trip logic to ensure tripping of the line only under abnormal conditions and to avoid unnecessary tripping during healthy operation of the line (for example, lightly loaded or unloaded).

Long transmission line draws substantial quantity of charging current. If such a line is open circuited or lightly loaded at the remote end, the voltage at remote end may exceeds local end voltage. This is known as Ferranti effect and is due to the voltage drop across the line inductance (due to charging current) being in phase with the local end voltages. Both capacitance and inductance are responsible for this phenomenon. The capacitance (and charging current) is negligible in short line but significant in medium line and appreciable in long line. The percentage voltage rise due to the Ferranti effect between local end and remote end voltage is proportional to the length of the line and the properties of the transmission line. The Ferranti effect is symmetrical between all three phases for normal balanced load condition. The overvoltage caused by Ferranti effect can be reduced by drawing larger load through the line or switching in the shunt reactor (connected either to line or to remote bus) at the remote end. The calculated compensated voltage at the local end can detect such overvoltage phenomenon.

The vector representation of local end and remote end voltages are shown below:

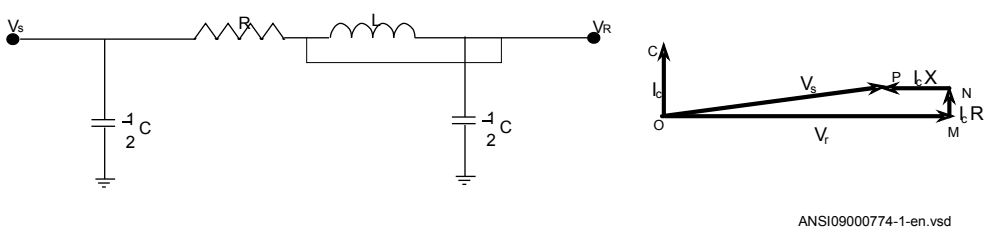

Figure 387: Vector diagram for local end and remote end voltage at no power transfer conditions

Where:

OM	Remote end voltage Vr
OP	Local end voltage Vs
OC	Current drawn by capacitance (Ic)
MN	Resistance drop (IcR)
NP	Inductive reactance drop (IcX)

If there is a transmission line that is opened at the remote end or radial or remote end source is weak, then a fault anywhere on the line can result into undervoltage at the remote end. There can be undervoltage at remote end also due to heavy loading or poor power factor on lagging side. A fault in a line connected beyond the remote end bus can also produce undervoltage at remote end. The compensated voltage calculated at the local end can detect such undervoltages. The undervoltage caused by a fault can be asymmetrical while that due to overloading is symmetrical.

The trip signal issued by compensated over and under voltage function should be accompanied by a transfer trip signal received from the remote end. The trip signal should be used as a release signal which can permit a remote transfer trip to be used to trip the local circuit breaker.

Setting of over voltage and under voltage levels for compensated voltage should be same as the remote end over and under voltage levels. This will ensure proper operation of voltage protection of the transmission line.

The definite delay time for compensated over and under voltage can be shorter than that at remote end, but not too short. A short delay time would result in frequent operation of compensated over and under voltage function without corresponding transfer trip received from remote end.

Switchable shunt reactors located on both line terminals and substation bus-bars are commonly used on long radial EHV transmission networks for the purpose of voltage control during daily/seasonal load variations.

The function can internally correct for the current through the local shunt reactor. The setting *EnShuntReactor* should be *Enabled* if there is a shunt reactor on the line. Change in this setting will be effected only when IED is restarted. Hence this setting should be configured during installing and then connection and disconnection of shunt reactor breaker should be handled by the input SWIPOS. In figure 388, if the measured current I_S is configured in the IED, then internal shunt reactor correction should be used (The setting *EnShuntReactor* should be *Enabled* if there is a shunt reactor on the line. Change in this setting will reboot the IED to take effect of X_{SR}. Hence this setting should be configured during installing and then connection and disconnection of shunt reactor breaker should be handled by the input SWIPOS). Also, for shunt reactor connected through the breaker or disconnector, status of the same must be configured in the IED as shown in figure 388.

Frequently, the input current to the line protection IED is already corrected for the current through the local shunt reactor. In figure 388 if the measured current I_L is connected to the IED then even if local shunt reactor is present its correction should not be done inside the function, otherwise this will result into incorrect calculation for compensated voltage.

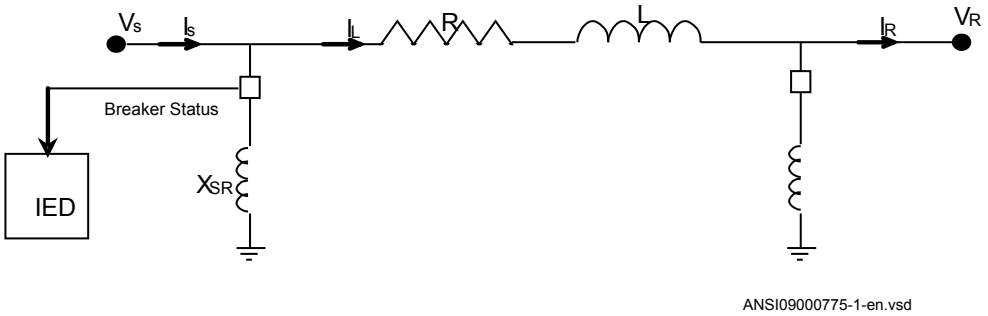

Figure 388: Breaker status configured with IED

15.8.4.3 Setting guidelines

GlobalBaseSel: Selects the global base value group used by the function to define (*IBase*), (*VBase*) and (*SBase*).

OperationUV: Used to set the under-voltage function *Enabled* or *Disabled*.

27_COMP: Level of low voltage detection, given in % of *VBase*. This setting should be based on fault calculations to find the voltage decrease in case of a fault at the most remote point where the direct trip scheme shall be active. The phase voltages shall be calculated for different types of faults (single phase-to-ground, phase-to-phase to ground, phase-to-phase and three-phase short circuits) at different switching states in the network.

tUV: Time delay for trip in case of low voltage detection

OperationOV: Used to set the over-voltage function *Enabled* or *Disabled*.

59_COMP: Level of high voltage detection, given in % of *VBase*. This setting should be based on fault calculations to find the voltage increase in case of an ground fault at the most remote point where the direct trip scheme shall be active. The phase voltages shall be calculated for different types of faults (single phase-to-ground and phase-to-phase to ground) at different switching states in the network. The setting must be higher than the largest phase voltage that can occur during non-disturbed network operation.

tOV: Time delay for trip in case of high voltage detection.

R1: Positive sequence line resistance given in ohm.

X1: Positive sequence line reactance given in ohm.

Xc: Half the value of the equivalent Positive sequence capacitive shunt reactance of the line given in ohm.

EnShuntReactor: Set *Enabled* or *Disabled* to enable the charging current to be involved in the voltage compensation calculation.

Xsh: Per phase reactance of the line connected shunt reactor given in ohm.

15.8.5 Sudden change in current variation SCCVPTOC (51)

15.8.5.1 Identification

Function description	IEC 61850 identification	IEC 60617 identification	ANSI/IEEE C37.2 device number
Sudden change in current variation	SCCVPTOC	-	51

15.8.5.2 Application

The Sudden change in current variation (SCCVPTOC, 51) function is fast way of finding any abnormality in line currents. When there is a fault in the system then current changes faster than the voltage. SCCVPTOC (51) finds abnormal condition based on phase-to-phase current variation. The main application is as one of local criterion to increase security when transfer trips are used.

15.8.5.3 Setting guidelines

GlobalBaseSel: Selects the global base value group used by the function to define (*IBase*), (*VBase*) and (*SBase*).

IPickup: Level of fixed threshold given in % of *IBase*. This setting should be based on fault calculations to find the current increase in case of a fault at the most remote point where the direct trip scheme shall be active. The phase to phase current shall be calculated for different types of faults (single phase to ground, phase to phase to ground, phase to phase and three phase short circuits) at different switching states in the network. In case of switching of large objects (shunt capacitor banks, transformers, etc.) large change in current can occur. The *IPickup* setting should be larger than estimated switch in currents measured by the protection.

tHold: Hold time (minimum signal duration). This time setting shall be long enough to assure that the CR-signal is received. The default value *0.5* s is recommended.

tDelay: Trip time is set according to the individual application.

15.8.6 Carrier receive logic LCCRPTRC (94)

15.8.6.1 Identification

Function description	IEC 61850 identification	IEC 60617 identification	ANSI/IEEE C37.2 device number
Carrier receive logic	LCCRPTRC	-	94

15.8.6.2 Application

In the Direct transfer trip scheme, the received CR signal gives the trip to the circuit breaker after checking certain local criteria functions in order to increase the security of the overall tripping functionality. Carrier receive logic (LCCRPTRC, 94) checks for the CR signals and passes the local check trip to the circuit breaker.

LCCRPTRC (94) receives the two CR signals, local criterion trip signals and releases the trip to the circuit breaker based on the input signal status and mode of operation. There are two modes of operation in CR channel logic. In the case of '1 out of 2' mode if any one of the two CR is received then the trip signal coming from the local criterion is released, and in case of '2 out of 2' mode both the CR's should be received to release the trip signal coming from the local criterion. Both the CR signals are validated using the channel error binary flag.

15.8.6.3 Setting guidelines

ChMode: This parameter can be set *1 out of 2* or *2 out of 2*. The parameter gives the conditions for operation of the transfer trip function, i.e. if only one CR signal is required or of both CR signals are required for trip (in addition to local criteria). If only one channel is available the parameter must be set *1 out of 2*. If parallel channels are available *2 out of 2* gives a high degree of security but can decrease the dependability if one channel is faulted.

tOperate: Trip time is normally set maximum *0.1* s.

15.8.7 Negative sequence overvoltage protection LCNSPTOV (47)

15.8.7.1 Identification

Function description	IEC 61850 identification	IEC 60617 identification	ANSI/IEEE C37.2 device number
Negative sequence overvoltage protection	LCNSPTOV	-	47

15.8.7.2 Application

Negative sequence symmetrical components are present in all types of fault condition. In case of three phase short circuits the negative sequence voltages and current have transient nature and will therefore decline to zero after some periods.

Negative sequence overvoltage protection (LCNSPTOV, 47) is a definite time stage comparator function. The negative sequence input voltage from the SMAI block is connected as input to the function through a group connection V3P in PCM600. This voltage is compared against the preset value and a pickup signal will be set high if the input negative sequence voltage is more than the preset value *Pickup2*. Trip signal will be set high after a time delay setting of *tV2*. There is a BLOCK input which will block the complete function. BLKTR will block the trip output. Negative sequence voltage is also available as service value output U2.

15.8.7.3 Setting guidelines

GlobalBaseSel: Selects the global base value group used by the function to define (*IBase*), (*VBase*) and (*SBase*).

Pickup2: Level of high negative sequence voltage detection given in % of *VBase*. This setting should be based on fault calculations to find the negative sequence voltage in case of a fault at the most remote point where the direct trip scheme shall be active. The negative sequence voltages shall be calculated for different types of faults (single phase to ground, phase to phase to ground and phase to phase short circuits) at different switching states in the network.

tV2: Time delay for trip in case of high negative sequence voltage detection. The trip function can be used as stand alone short circuit protection with a long time delay. The choice of time delay is depending on the application of the protection as well as network topology.

15.8.8 Zero sequence overvoltage protection LCZSPTOV (59N)

15.8.8.1 Identification

Function description	IEC 61850 identification	IEC 60617 identification	ANSI/IEEE C37.2 device number
Zero sequence overvoltage protection	LCZSPTOV	-	59N

15.8.8.2 Application

Zero sequence symmetrical components are present in all abnormal conditions involving ground. They have a considerably high value during ground faults.

Zero sequence overvoltage protection (LCZSPTOV, 59N) is a definite time stage comparator function. The Zero sequence input voltage from the SMAI block is connected as input to the function through a group connection V3P in PCM600. This voltage is compared against the preset value and a pickup signal will be set high if the input zero sequence voltage is more than the preset value *3V0PU*. Trip signal will be set high after a time delay setting of *t3V0*. BLOCK input will block the complete function. BLKTR will block the trip output . Zero sequence voltage will be available as service value output as 3V0.

15.8.8.3 Setting guidelines

GlobalBaseSel: Selects the global base value group used by the function to define (*IBase*), (*VBase*) and (*SBase*).

The IED is fed from a normal voltage transformer group where the residual voltage is created from the phase to ground voltages within the protection software or the residual voltage is fed from a broken delta-connected VT-group. The setting of analogue inputs always gives 3U0. Therefore set:

$$VBase = \frac{V_{ph-ph}}{\sqrt{3}}$$

(Equation 557)

3V0PU: Level of high zero sequence voltage detection given in % of *VBase*. This setting should be based on fault calculations to find the zero sequence voltage in case of a fault at the most remote point where the direct trip scheme shall be active. The zero sequence voltages shall be calculated for different types of ground faults (single phase to ground and phase to phase to ground short circuits) at different switching states in the network.

t3V0: Time delay for trip in case of high zero sequence voltage detection. The trip function can be used as stand alone ground fault protection with a long time delay. The choice of time delay is depending on the application of the protection as well as network topology.

15.8.9 Negative sequence overcurrent protection LCNSPTOC (46)

15.8.9.1 Identification

Function description	IEC 61850 identification	IEC 60617 identification	ANSI/IEEE C37.2 device number
Negative sequence overcurrent protection	LCNSPTOC	-	46

15.8.9.2 Application

Negative sequence symmetrical components are present in all types of fault condition.

Negative sequence overcurrent protection (LCNSPTOC, 46) is a definite time stage comparator function. The negative sequence input current from the SMAI block is connected as input to the function through a group connection I3P in PCM600. This current is compared against the preset value and a pickup signal will be set high if the input negative sequence current is greater than the preset value *Pickup2*. Trip signal will be set high after a time delay setting of *tI2*. BLOCK input will block the complete function. BLKTR will block the trip output. Negative sequence current is available as service value output I2.

15.8.9.3 Setting guideline

GlobalBaseSel: Selects the global base value group used by the function to define (*IBase*), (*VBase*) and (*SBase*).

Pickup2: Level of high negative sequence current detection given in % of *IBase*. This setting should be based on fault calculations to find the negative sequence current in case of a fault at the most remote point where the direct trip scheme shall be active. The negative sequence current shall be calculated for different types of faults (single phase to ground, phase to phase to ground and phase to phase short circuits) at different switching states in the network.

tI2: Time delay for trip in case of high negative sequence current detection. The trip function can be used as stand alone short circuit protection with a long time delay. The

choice of time delay is depending on the application of the protection as well as network topology.

15.8.10 Zero sequence overcurrent protection LCZSPTOC (51N)

15.8.10.1 Identification

Function description	IEC 61850 identification	IEC 60617 identification	ANSI/IEEE C37.2 device number
Zero sequence overcurrent protection	LCZSPTOC	-	51N

15.8.10.2 Application

Zero sequence symmetrical components are present in all abnormal conditions involving ground. They are having a considerably high value during ground faults.

Zero sequence overcurrent protection (LCZSPTOC, 51N) is a definite time stage comparator function. The zero sequence input current from the SMAI block is connected as input to the function through a group connection I3P in PCM600. This current is compared against the preset value and a pickup signal will be set high if the input zero sequence current is more than the preset value *3I0> PU*. Trip signal will be set high after a time delay setting of *t3I0*. BLOCK input will block the complete function. BLKTR will block the trip output. Zero sequence current is available as service value output 3I0.

15.8.10.3 Setting guidelines

GlobalBaseSel: Selects the global base value group used by the function to define (*IBase*), (*VBase*) and (*SBase*).

3I0 PU : Level of high zero sequence current detection given in % of *IBase*. This setting should be based on fault calculations to find the zero sequence current in case of a fault at the most remote point where the direct trip scheme shall be active. The zero sequence current shall be calculated for different types of faults (single phase to ground and phase to phase to ground) at different switching states in the network.

t3I0: Time delay for trip in case of high zero sequence current detection. The trip function can be used as stand alone short circuit protection with a long time delay. The choice of time delay is depending on the application of the protection as well as network topology.

15.8.11 Three phase overcurrent LCP3PTOC (51)

15.8.11.1 Identification

Function description	IEC 61850 identification	IEC 60617 identification	ANSI/IEEE C37.2 device number
Three phase overcurrent	LCP3PTOC	-	51

15.8.11.2 Application

Three phase overcurrent (LCP3PTOC, 51) is designed for detecting over current conditions due to fault or any other abnormality in the system.

LCP3PTOC (51) could be used as a back up for other local criterion checks.

15.8.11.3 Setting guidelines

GlobalBaseSel: Selects the global base value group used by the function to define (*IBase*), (*VBase*) and (*SBase*).

PU 51: Level of high phase current detection given in % of *IBase*. This setting can be based on evaluation of the largest current that can occur during non-faulted network operation: $I_{loadmax}$. Fault calculations where the smallest current at relevant faults gives: $I_{faultmin}$. The setting can be chosen: $I_{loadmax}$<*IOC*> <$I_{faultmin}$

tOC: Time delay for trip in case of high phase current detection. The trip function can be used as stand alone short circuit protection with a long time delay. The choice of time delay is depending on the application of the protection as well as network topology.

15.8.12 Three phase undercurrent LCP3PTUC (37)

15.8.12.1 Identification

Function description	IEC 61850 identification	IEC 60617 identification	ANSI/IEEE C37.2 device number
Three phase undercurrent	LCP3PTUC	-	37

15.8.12.2 Application

Three phase undercurrent protection function (LCP3PTUC, 37) is designed for detecting loss of load conditions.

When the transformer or shunt reactor differential operates and the secondary side circuit breaker is tripped there will be very low current from this end of the line to the remote end.

LCP3PTUC (37) detects the above low current condition by monitoring the current and helps to trip the circuit breaker at this end instantaneously or after a time delay according to the requirement.

15.8.12.3 Setting guidelines

GlobalBaseSel: Selects the global base value group used by the function to define (*IBase*), (*VBase*) and (*SBase*).

PU_37: Level of low phase current detection given in % of *IBase*. This setting is highly depending on the application and therefore can no general rules be given.

tUC: Time delay for trip in case of low phase current detection. The trip function can be used as stand alone short circuit protection with a long time delay. The choice of time delay is depending on the application of the protection as well as network topology.

Section 16 Logic

16.1 Tripping logic common 3-phase output SMPPTRC (94)

16.1.1 Identification

Function description	IEC 61850 identification	IEC 60617 identification	ANSI/IEEE C37.2 device number
Tripping logic common 3-phase output	SMPPTRC	*I->O*	94

16.1.2 Application

All trip signals from the different protection functions shall be routed through the trip logic. In its simplest alternative the logic will only link the TRIP signal and make sure that it is long enough.

Tripping logic SMPPTRC (94) offers three different operating modes:

- Three-pole tripping for all fault types (3ph operating mode)
- Single-pole tripping for single-phase faults and three-pole tripping for multi-phase and evolving faults (1ph/3ph operating mode). The logic also issues a three-pole tripping command when phase selection within the operating protection functions is not possible, or when external conditions request three-pole tripping.
- Two-pole tripping for two-phase faults.

The three-pole trip for all faults offers a simple solution and is often sufficient in well meshed transmission systems and in sub-transmission systems. Since most faults, especially at the highest voltage levels, are single phase-to-ground faults, single-pole tripping can be of great value. If only the faulty phase is tripped, power can still be transferred on the line during the dead time that arises before reclosing. Single-pole tripping during single-phase faults must be combined with single pole reclosing.

To meet the different double, breaker-and-a-half and other multiple circuit breaker arrangements, two identical SMPPTRC (94) function blocks may be provided within the IED.

One SMPPTRC (94) function block should be used for each breaker, if the line is connected to the substation via more than one breaker. Assume that single-pole tripping and autoreclosing is used on the line. Both breakers are then normally set up for 1/3-pole tripping and 1/3-phase autoreclosing. As an alternative, the breaker chosen as master can have single-pole tripping, while the slave breaker could have three-pole tripping and autoreclosing. In the case of a permanent fault, only one of the breakers has to be operated when the fault is energized a second time. In the event of a transient fault the slave breaker performs a three-pole reclosing onto the non-faulted line.

The same philosophy can be used for two-pole tripping and autoreclosing.

To prevent closing of a circuit breaker after a trip the function can block the closing.

The two instances of the SMPPTRC (94) function are identical except, for the name of the function block (SMPPTRC1 and SMPPTRC2). References will therefore only be made to SMPPTRC1 in the following description, but they also apply to SMPPTRC2.

16.1.2.1 Three-pole tripping

A simple application with three-pole tripping from the logic block utilizes part of the function block. Connect the inputs from the protection function blocks to the input TRINP_3P. If necessary (normally the case) use a logic OR block to combine the different function outputs to this input. Connect the output TRIP to the digital Output/s on the IO board.

This signal can also be used for other purposes internally in the IED. An example could be the starting of Breaker failure protection. The three outputs TR_A, TR_B, TR_C will always be activated at every trip and can be utilized on individual trip outputs if single-pole operating devices are available on the circuit breaker even when a three-pole tripping scheme is selected.

Set the function block to *Program = 3Ph* and set the required length of the trip pulse to for example, *tTripMin = 150ms*.

For special applications such as Lock-out refer to the separate section below. The typical connection is shown below in figure 389. Signals that are not used are dimmed.

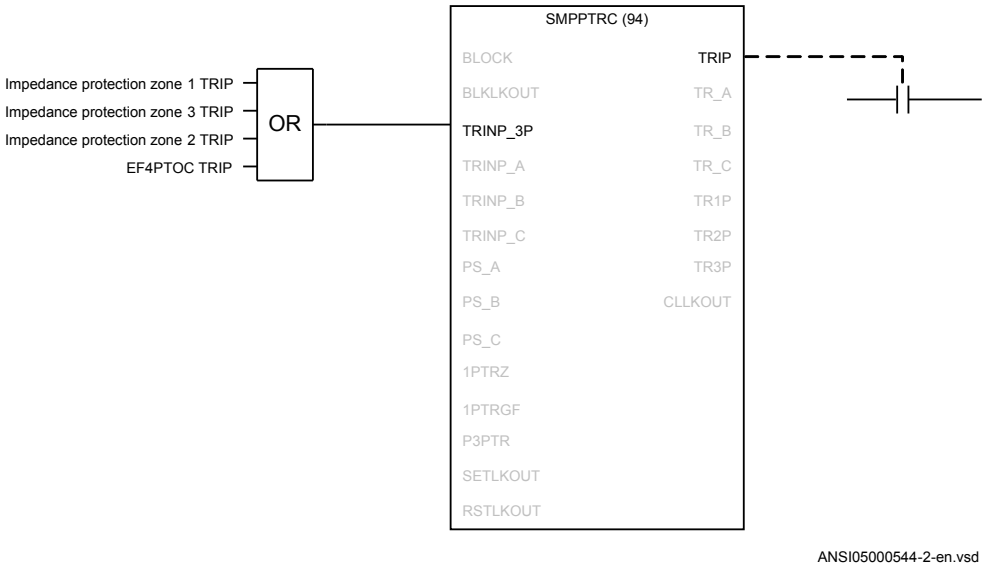

Figure 389: Tripping logic SMPPTRC (94) is used for a simple three-pole tripping application

16.1.2.2 Single- and/or three-pole tripping

The single-/three-pole tripping will give single-pole tripping for single-phase faults and three-pole tripping for multi-phase fault. The operating mode is always used together with a single-phase autoreclosing scheme.

The single-pole tripping can include different options and the use of the different inputs in the function block.

The inputs 1PTRZ and 1PTREF are used for single-pole tripping for distance protection and directional ground fault protection as required.

The inputs are combined with the phase selection logic and the pickup signals from the phase selector must be connected to the inputs PS_A, PS_B and PS_C to achieve the tripping on the respective single-pole trip outputs TR_A, TR_B and TR_C. The Output TRIP is a general trip and activated independent of which phase is involved. Depending on which phases are involved the outputs TR1P, TR2P and TR3P will be activated as well.

When single-pole tripping schemes are used a single-phase autoreclosing attempt is expected to follow. For cases where the autoreclosing is not in service or will not follow for some reason, the input Prepare Three-pole Trip P3PTR must be activated. This is normally connected to the respective output on the Synchronism check, energizing check, and synchronizing function SESRSYN (25) but can also be

connected to other signals, for example an external logic signal. If two breakers are involved, one TR block instance and one SESRSYN (25) instance is used for each breaker. This will ensure correct operation and behavior of each breaker.

The output Trip 3 Phase TR3P must be connected to the respective input in SESRSYN (25) to switch SESRSYN (25) to three-phase reclosing. If this signal is not activated SESRSYN (25) will use single-phase reclosing dead time.

Note also that if a second line protection is utilizing the same SESRSYN (25) the three-pole trip signal must be generated, for example by using the three-trip relays contacts in series and connecting them in parallel to the TR3P output from the trip block.

The trip logic also has inputs TRIN_A, TRIN_B and TRIN_C where phase-selected trip signals can be connected. Examples can be individual phase inter-trips from remote end or internal/external phase selected trip signals, which are routed through the IED to achieve, for example SESRSYN (25), Breaker failure, and so on. Other back-up functions are connected to the input TRIN as described above. A typical connection for a single-pole tripping scheme is shown in figure 390.

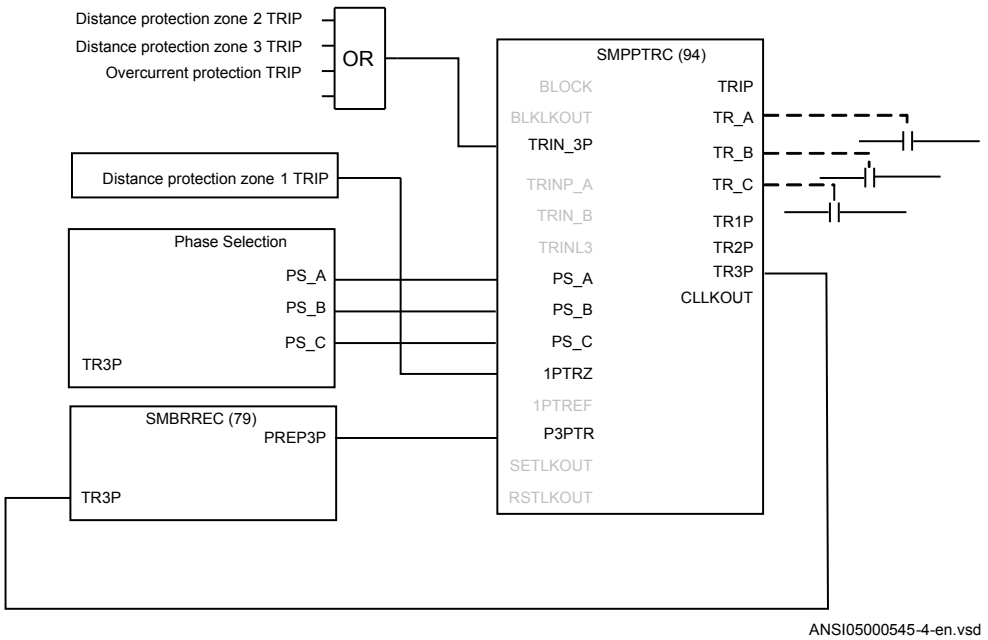

Figure 390: The trip logic function SMPPTRC (94) used for single-pole tripping application

16.1.2.3 Single-, two- or three-pole tripping

The single-/two-/three-pole tripping mode provides single-pole tripping for single-phase faults, two-pole tripping for two-phase faults and three-pole tripping for multi-phase faults. The operating mode is always used together with an autoreclosing scheme with setting *Program = 1/2/3Ph* or *Program = 1/3Ph* attempt.

The functionality is very similar to the single-phase scheme described above. However SESRSYN (25) must in addition to the connections for single phase above be informed that the trip is two phase by connecting the trip logic output TR2P to the respective input in SESRSYN (25).

16.1.2.4 Lock-out

This function block is provided with possibilities to initiate lock-out. The lock-out can be set to only activate the block closing output CLLKOUT or initiate the block closing output and also maintain the trip signal (latched trip).

The lock-out can then be manually reset after checking the primary fault by activating the input reset Lock-Out RSTLKOUT.

If external conditions are required to initiate Lock-out but not initiate trip this can be achieved by activating input SETLKOUT. The setting *AutoLock = Disabled* means that the internal trip will not activate lock-out so only initiation of the input SETLKOUT will result in lock-out. This is normally the case for overhead line protection where most faults are transient. Unsuccessful autoreclose and back-up zone tripping can in such cases be connected to initiate Lock-out by activating the input SETLKOUT.

16.1.2.5 Blocking of the function block

The function block can be blocked in two different ways. Its use is dependent on the application. Blocking can be initiated internally by logic, or by the operator using a communication channel. Total blockage of the trip function is done by activating the input BLOCK and can be used to block the output of the trip logic in the event of internal failures. Blockage of lock-out output by activating input BLKLKOUT is used for operator control of the lock-out function.

16.1.3 Setting guidelines

The parameters for Tripping logic SMPPTRC (94) are set via the local HMI or PCM600.

The following trip parameters can be set to regulate tripping.

Operation: Sets the mode of operation. *Disabled* switches the tripping off. The normal selection is *Enabled*.

Program: Sets the required tripping scheme. Normally *3Ph* or *1/2Ph* are used.

TripLockout: Sets the scheme for lock-out. *Disabled* only activates the lock-out output. *Enabled* activates the lock-out output and latches the output `TRIP`. The normal selection is *Disabled*.

AutoLock: Sets the scheme for lock-out. *Disabled* only activates lock-out through the input SETLKOUT. *Enabled* additonally allows activation through the trip function itself. The normal selection is *Disabled*.

tTripMin: Sets the required minimum duration of the trip pulse. It should be set to ensure that the breaker is tripped correctly. Normal setting is *0.150s*.

tWaitForPHS: Sets a duration after any of the inputs 1PTRZ or 1PTREF has been activated during which a phase selection must occur to get a single phase trip. If no phase selection has been achieved a three-phase trip will be issued after the time has elapsed.

16.2 Trip matrix logic TMAGAPC

16.2.1 Identification

Function description	IEC 61850 identification	IEC 60617 identification	ANSI/IEEE C37.2 device number
Trip matrix logic	TMAGAPC	-	-

16.2.2 Application

Trip matrix logic TMAGAPC function is used to route trip signals and other logical output signals to different output contacts on the IED.

The trip matrix logic function has 3 output signals and these outputs can be connected to physical tripping outputs according to the specific application needs for settable pulse or steady output.

16.2.3 Setting guidelines

Operation: Operation of function *Enabled*/*Disabled*.

PulseTime: Defines the pulse time when in *Pulsed* mode. When used for direct tripping of circuit breaker(s) the pulse time delay shall be set to approximately 0.150 seconds in

order to obtain satisfactory minimum duration of the trip pulse to the circuit breaker trip coils.

OnDelay: Used to prevent output signals to be given for spurious inputs. Normally set to 0 or a low value.

OffDelay: Defines a delay of the reset of the outputs after the activation conditions no longer are fulfilled. It is only used in *Steady* mode. When used for direct tripping of circuit breaker(s) the off delay time shall be set to at least 0.150 seconds in order to obtain a satisfactory minimum duration of the trip pulse to the circuit breaker trip coils.

ModeOutputx: Defines if output signal `OUTPUTx` (where x=1-3) is *Steady* or *Pulsed*.

16.3 Logic for group alarm ALMCALH

16.3.1 Identification

Function description	IEC 61850 identification	IEC 60617 identification	ANSI/IEEE C37.2 device number
Logic for group alarm	ALMCALH	-	-

16.3.2 Application

Group alarm logic function ALMCALH is used to route alarm signals to different LEDs and/or output contacts on the IED.

ALMCALH output signal and the physical outputs allows the user to adapt the alarm signal to physical tripping outputs according to the specific application needs.

16.3.3 Setting guidelines

Operation: *Enabled* or *Disabled*

16.4 Logic for group alarm WRNCALH

16.4.1 Identification

Function description	IEC 61850 identification	IEC 60617 identification	ANSI/IEEE C37.2 device number
Logic for group warning	WRNCALH	-	-

16.4.1.1 Application

Group warning logic function WRNCALH is used to route warning signals to LEDs and/ or output contacts on the IED.

WRNCALH output signal WARNING and the physical outputs allows the user to adapt the warning signal to physical tripping outputs according to the specific application needs.

16.4.1.2 Setting guidelines

OperationEnabled or *Disabled*

16.5 Logic for group indication INDCALH

16.5.1 Identification

Function description	IEC 61850 identification	IEC 60617 identification	ANSI/IEEE C37.2 device number
Logic for group indication	INDCALH	-	-

16.5.1.1 Application

Group indication logic function INDCALH is used to route indication signals to different LEDs and/or output contacts on the IED.

INDCALH output signal IND and the physical outputs allows the user to adapt the indication signal to physical outputs according to the specific application needs.

16.5.1.2 Setting guidelines

Operation: *Enabled* or *Disabled*

16.6 Configurable logic blocks

16.6.1 Application

A set of standard logic blocks, like AND, OR etc, and timers are available for adapting the IED configuration to the specific application needs.

There are no settings for AND gates, OR gates, inverters or XOR gates.

For normal On/Off delay and pulse timers the time delays and pulse lengths are set from the local HMI or via the PST tool.

Both timers in the same logic block (the one delayed on pick-up and the one delayed on drop-out) always have a common setting value.

For controllable gates, settable timers and SR flip-flops with memory, the setting parameters are accessible via the local HMI or via the PST tool.

16.6.2.1 Configuration

Logic is configured using the ACT configuration tool in PCM600.

Execution of functions as defined by the configurable logic blocks runs according to a fixed sequence with different cycle times.

For each cycle time, the function block is given an serial execution number. This is shown when using the ACT configuration tool with the designation of the function block and the cycle time, see example below.

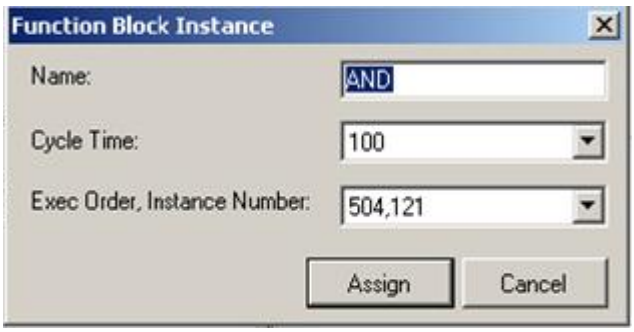

IEC09000695_2_en.vsd

Figure 391: Example designation, serial execution number and cycle time for logic function

The execution of different function blocks within the same cycle is determined by the order of their serial execution numbers. Always remember this when connecting two or more logical function blocks in series.

Always be careful when connecting function blocks with a fast cycle time to function blocks with a slow cycle time.
Remember to design the logic circuits carefully and always check the execution sequence for different functions. In other cases, additional

time delays must be introduced into the logic schemes to prevent errors, for example, race between functions.

16.7 Fixed signal function block FXDSIGN

16.7.1 Identification

Function description	IEC 61850 identification	IEC 60617 identification	ANSI/IEEE C37.2 device number
Fixed signals	FXDSIGN	-	-

16.7.2 Application

The Fixed signals function FXDSIGN generates nine pre-set (fixed) signals that can be used in the configuration of an IED, either for forcing the unused inputs in other function blocks to a certain level/value, or for creating certain logic. Boolean, integer, floating point, string types of signals are available.

Example for use of GRP_OFF signal in FXDSIGN

The Restricted earth fault function REFPDIF (87N) can be used both for auto-transformers and normal transformers.

When used for auto-transformers, information from both windings parts, together with the neutral point current, needs to be available to the function. This means that three inputs are needed.

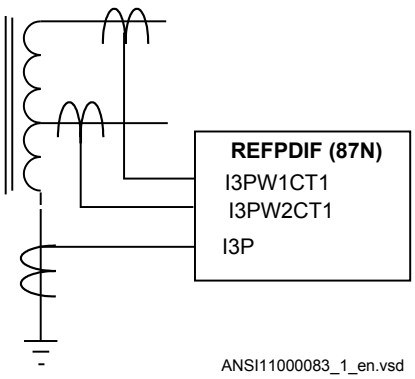

Figure 392: REFPDIF (87N) function inputs for autotransformer application

For normal transformers only one winding and the neutral point is available. This means that only two inputs are used. Since all group connections are mandatory to be connected, the third input needs to be connected to something, which is the GRP_OFF signal in FXDSIGN function block.

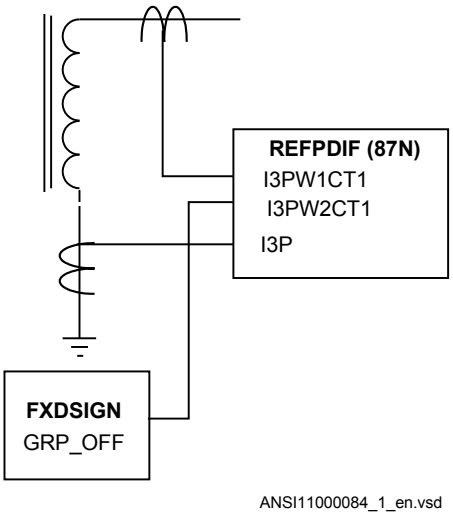

Figure 393: REFPDIF (87N) function inputs for normal transformer application

16.8 Boolean 16 to Integer conversion B16I

16.8.1 Identification

Function description	IEC 61850 identification	IEC 60617 identification	ANSI/IEEE C37.2 device number
Boolean 16 to integer conversion	B16I	-	-

16.8.2 Application

Boolean 16 to integer conversion function B16I is used to transform a set of 16 binary (logical) signals into an integer. It can be used – for example, to connect logical output signals from a function (like distance protection) to integer inputs from another function (like line differential protection). B16I does not have a logical node mapping.

The Boolean 16 to integer conversion function (B16I) will transfer a combination of up to 16 binary inputs INx where 1≤x≤16 to an integer. Each INx represents a value according to the table below from 0 to 32768. This follows the general formula: INx =

2^{x-1} where 1≤x≤16. The sum of all the values on the activated INx will be available on the output OUT as a sum of the values of all the inputs INx that are activated. OUT is an integer. When all INx where 1≤x≤16 are activated that is = Boolean 1 it corresponds to that integer 65535 is available on the output OUT. B16I function is designed for receiving up to 16 booleans input locally. If the BLOCK input is activated, it will freeze the output at the last value.

Values of each of the different OUTx from function block B16I for 1≤x≤16.

The sum of the value on each INx corresponds to the integer presented on the output OUT on the function block B16I.

Name of input	Type	Default	Description	Value when activated	Value when deactivated
IN1	BOOLEAN	0	Input 1	1	0
IN2	BOOLEAN	0	Input 2	2	0
IN3	BOOLEAN	0	Input 3	4	0
IN4	BOOLEAN	0	Input 4	8	0
IN5	BOOLEAN	0	Input 5	16	0
IN6	BOOLEAN	0	Input 6	32	0
IN7	BOOLEAN	0	Input 7	64	0
IN8	BOOLEAN	0	Input 8	128	0
IN9	BOOLEAN	0	Input 9	256	0
IN10	BOOLEAN	0	Input 10	512	0
IN11	BOOLEAN	0	Input 11	1024	0
IN12	BOOLEAN	0	Input 12	2048	0
IN13	BOOLEAN	0	Input 13	4096	0
IN14	BOOLEAN	0	Input 14	8192	0
IN15	BOOLEAN	0	Input 15	16384	0
IN16	BOOLEAN	0	Input 16	32768	0

The sum of the numbers in column “Value when activated” when all INx (where 1≤x≤16) are active that is=1; is 65535. 65535 is the highest boolean value that can be converted to an integer by the B16I function block.

16.9 Boolean 16 to Integer conversion with logic node representation BTIGAPC

16.9.1 Identification

Function description	IEC 61850 identification	IEC 60617 identification	ANSI/IEEE C37.2 device number
Boolean 16 to integer conversion with logic node representation	BTIGAPC	-	-

16.9.2 Application

Boolean 16 to integer conversion with logic node representation function BTIGAPC is used to transform a set of 16 binary (logical) signals into an integer. BTIGAPC can receive an integer from a station computer – for example, over IEC 61850–8–1. These functions are very useful when you want to generate logical commands (for selector switches or voltage controllers) by inputting an integer number. BTIGAPC has a logical node mapping in IEC 61850.

The Boolean 16 to integer conversion function (BTIGAPC) will transfer a combination of up to 16 binary inputs INx where $1 \leq x \leq 16$ to an integer. Each INx represents a value according to the table below from 0 to 32768. This follows the general formula: INx = 2^{x-1} where $1 \leq x \leq 16$. The sum of all the values on the activated INx will be available on the output OUT as a sum of the values of all the inputs INx that are activated. OUT is an integer. When all INx where $1 \leq x \leq 16$ are activated that is = Boolean 1 it corresponds to that integer 65535 is available on the output OUT. BTIGAPC function is designed for receiving up to 16 booleans input locally. If the BLOCK input is activated, it will freeze the output at the last value.

Values of each of the different OUTx from function block BTIGAPC for $1 \leq x \leq 16$.

The sum of the value on each INx corresponds to the integer presented on the output OUT on the function block BTIGAPC.

Name of input	Type	Default	Description	Value when activated	Value when deactivated
IN1	BOOLEAN	0	Input 1	1	0
IN2	BOOLEAN	0	Input 2	2	0
IN3	BOOLEAN	0	Input 3	4	0
IN4	BOOLEAN	0	Input 4	8	0
IN5	BOOLEAN	0	Input 5	16	0
IN6	BOOLEAN	0	Input 6	32	0
IN7	BOOLEAN	0	Input 7	64	0
IN8	BOOLEAN	0	Input 8	128	0
IN9	BOOLEAN	0	Input 9	256	0
IN10	BOOLEAN	0	Input 10	512	0

Table continues on next page

Name of input	Type	Default	Description	Value when activated	Value when deactivated
IN11	BOOLEAN	0	Input 11	1024	0
IN12	BOOLEAN	0	Input 12	2048	0
IN13	BOOLEAN	0	Input 13	4096	0
IN14	BOOLEAN	0	Input 14	8192	0
IN15	BOOLEAN	0	Input 15	16384	0
IN16	BOOLEAN	0	Input 16	32768	0

The sum of the numbers in column “Value when activated” when all INx (where 1≤x≤16) are active that is=1; is 65535. 65535 is the highest boolean value that can be converted to an integer by the BTIGAPC function block.

16.10 Integer to Boolean 16 conversion IB16

16.10.1 Identification

Function description	IEC 61850 identification	IEC 60617 identification	ANSI/IEEE C37.2 device number
Integer to boolean 16 conversion	IB16	-	-

16.10.2 Application

Integer to boolean 16 conversion function (IB16) is used to transform an integer into a set of 16 binary (logical) signals. It can be used – for example, to connect integer output signals from one function to binary (logical) inputs to another function. IB16 function does not have a logical node mapping.

The Boolean 16 to integer conversion function (IB16) will transfer a combination of up to 16 binary inputs INx where 1≤x≤16 to an integer. Each INx represents a value according to the table below from 0 to 32768. This follows the general formula: INx = 2^{x-1} where 1≤x≤16. The sum of all the values on the activated INx will be available on the output OUT as a sum of the values of all the inputs INx that are activated. OUT is an integer. When all INx where 1≤x≤16 are activated that is = Boolean 1 it corresponds to that integer 65535 is available on the output OUT. IB16 function is designed for receiving up to 16 booleans input locally. If the BLOCK input is activated, it will freeze the output at the last value.

Values of each of the different OUTx from function block IB16 for 1≤x≤16.

The sum of the value on each INx corresponds to the integer presented on the output OUT on the function block IB16.

Name of input	Type	Default	Description	Value when activated	Value when deactivated
IN1	BOOLEAN	0	Input 1	1	0
IN2	BOOLEAN	0	Input 2	2	0
IN3	BOOLEAN	0	Input 3	4	0
IN4	BOOLEAN	0	Input 4	8	0
IN5	BOOLEAN	0	Input 5	16	0
IN6	BOOLEAN	0	Input 6	32	0
IN7	BOOLEAN	0	Input 7	64	0
IN8	BOOLEAN	0	Input 8	128	0
IN9	BOOLEAN	0	Input 9	256	0
IN10	BOOLEAN	0	Input 10	512	0
IN11	BOOLEAN	0	Input 11	1024	0
IN12	BOOLEAN	0	Input 12	2048	0
IN13	BOOLEAN	0	Input 13	4096	0
IN14	BOOLEAN	0	Input 14	8192	0
IN15	BOOLEAN	0	Input 15	16384	0
IN16	BOOLEAN	0	Input 16	32768	0

The sum of the numbers in column “Value when activated” when all INx (where 1≤x≤16) are active that is=1; is 65535. 65535 is the highest boolean value that can be converted to an integer by the IB16 function block.

16.11 Integer to Boolean 16 conversion with logic node representation ITBGAPC

16.11.1 Identification

Function description	IEC 61850 identification	IEC 60617 identification	ANSI/IEEE C37.2 device number
Integer to boolean 16 conversion with logic node representation	ITBGAPC	-	-

16.11.2 Application

Integer to boolean 16 conversion with logic node representation function (ITBGAPC) is used to transform an integer into a set of 16 boolean signals. ITBGAPC function can receive an integer from a station computer – for example, over IEC 61850–8–1. This function is very useful when the user wants to generate logical commands (for selector switches or voltage controllers) by inputting an integer number. ITBGAPC function has a logical node mapping in IEC 61850.

The Integer to Boolean 16 conversion with logic node representation function (ITBGAPC) will transfer an integer with a value between 0 to 65535 communicated via IEC61850 and connected to the ITBGAPC function block to a combination of activated outputs OUTx where 1≤x≤16.

The values of the different OUTx are according to the Table 48.

If the BLOCK input is activated, it freezes the logical outputs at the last value.

Table 48: Output signals

Name of OUTx	Type	Description	Value when activated	Value when deactivated
OUT1	BOOLEAN	Output 1	1	0
OUT2	BOOLEAN	Output 2	2	0
OUT3	BOOLEAN	Output 3	4	0
OUT4	BOOLEAN	Output 4	8	0
OUT5	BOOLEAN	Output 5	16	0
OUT6	BOOLEAN	Output 6	32	0
OUT7	BOOLEAN	Output 7	64	0
OUT8	BOOLEAN	Output 8	128	0
OUT9	BOOLEAN	Output 9	256	0
OUT10	BOOLEAN	Output 10	512	0
OUT11	BOOLEAN	Output 11	1024	0
OUT12	BOOLEAN	Output 12	2048	0
OUT13	BOOLEAN	Output 13	4096	0
OUT14	BOOLEAN	Output 14	8192	0
OUT15	BOOLEAN	Output 15	16384	0
OUT16	BOOLEAN	Output 16	32768	0

The sum of the numbers in column “Value when activated” when all OUTx (1≤x≤16) are active equals 65535. This is the highest integer that can be converted by the ITBGAPC function block.

16.12 Elapsed time integrator with limit transgression and overflow supervision TEIGAPC

16.12.1 Identification

Function Description	IEC 61850 identification	IEC 60617 identification	ANSI/IEEE C37.2 device number
Elapsed time integrator	TEIGAPC	-	-

16.12.2 Application

The function TEIGAPC is used for user-defined logics and it can also be used for different purposes internally in the IED. An application example is the integration of elapsed time during the measurement of neutral point voltage or neutral current at earth-fault conditions.

Settable time limits for warning and alarm are provided. The time limit for overflow indication is fixed to 999999.9 seconds.

16.12.3 Setting guidelines

The settings *tAlarm* and *tWarning* are user settable limits defined in seconds. The achievable resolution of the settings depends on the level of the values defined.

A resolution of 10 ms can be achieved when the settings are defined within the range

1.00 second ≤ *tAlarm* ≤ *99 999.99* seconds

1.00 second ≤ *tWarning* ≤ *99 999.99* seconds.

If the values are above this range the resolution becomes lower

99 999.99 seconds ≤ *tAlarm* ≤ *999 999.9* seconds

99 999.99 seconds≤ *tWarning* ≤ *999 999.9* seconds

Note that *tAlarm* and *tWarning* are independent settings, that is, there is no check if *tAlarm* > *tWarning*.

The limit for the overflow supervision is fixed at 999999.9 seconds.

Section 17 Monitoring

17.1 Measurement

17.1.1 Identification

Function description	IEC 61850 identification	IEC 60617 identification	ANSI/IEEE C37.2 device number
Measurements	CVMMXN	*P, Q, S, I, U, f*	-
Phase current measurement	CMMXU	*I*	-
Phase-phase voltage measurement	VMMXU	*U*	-
Current sequence component measurement	CMSQI	*I1, I2, I0*	-
Voltage sequence component measurement	VMSQI	*U1, U2, U0*	-
Phase-neutral voltage measurement	VNMMXU	*U*	-

17.1.2 Application

Measurement functions is used for power system measurement, supervision and reporting to the local HMI, monitoring tool within PCM600 or to station level for example, via IEC 61850. The possibility to continuously monitor measured values of active power, reactive power, currents, voltages, frequency, power factor etc. is vital for efficient production, transmission and distribution of electrical energy. It provides to the system operator fast and easy overview of the present status of the power system. Additionally, it can be used during testing and commissioning of protection and control IEDs in order to verify proper operation and connection of instrument transformers (CTs and VTs). During normal service by periodic comparison of the measured value from the IED with other independent meters the proper operation of the IED analog measurement chain can be verified. Finally, it can be used to verify proper direction orientation for distance or directional overcurrent protection function.

The available measured values of an IED are depending on the actual hardware (TRM) and the logic configuration made in PCM600.

All measured values can be supervised with four settable limits that is, low-low limit, low limit, high limit and high-high limit. A zero clamping reduction is also supported, that is, the measured value below a settable limit is forced to zero which reduces the impact of noise in the inputs.

Dead-band supervision can be used to report measured signal value to station level when change in measured value is above set threshold limit or time integral of all changes since the last time value updating exceeds the threshold limit. Measure value can also be based on periodic reporting.

Main menu/Measurement/Monitoring/Service values/CVMMXN

The measurement function, CVMMXN, provides the following power system quantities:

- P, Q and S: three phase active, reactive and apparent power
- PF: power factor
- V: phase-to-phase voltage magnitude
- I: phase current magnitude
- F: power system frequency

,

The measuring functions CMMXU, VMMXU and VNMMXU provide physical quantities:

- I: phase currents (magnitude and angle) (CMMXU)
- V: voltages (phase-to-ground and phase-to-phase voltage, magnitude and angle) (VMMXU, VNMMXU)

The CVMMXN function calculates three-phase power quantities by using fundamental frequency phasors (DFT values) of the measured current respectively voltage signals. The measured power quantities are available either, as instantaneously calculated quantities or, averaged values over a period of time (low pass filtered) depending on the selected settings.

It is possible to calibrate the measuring function above to get better then class 0.5 presentation. This is accomplished by angle and magnitude compensation at 5, 30 and 100% of rated current and at 100% of rated voltage.

The power system quantities provided, depends on the actual hardware, (TRM) and the logic configuration made in PCM600.

The measuring functions CMSQI and VMSQI provide sequence component quantities:

- I: sequence currents (positive, zero, negative sequence, magnitude and angle)
- V: sequence voltages (positive, zero and negative sequence, magnitude and angle).

17.1.3 Zero clamping

The measuring functions, CVMMXN, CMMXU, VMMXU and VNMMXU have no interconnections regarding any setting or parameter.

Zero clampings are also entirely handled by the *ZeroDb* for each and every signal separately for each of the functions. For example, the zero clamping of *U12* is handled by *UL12ZeroDb* in VMMXU, zero clamping of I1 is handled by *IL1ZeroDb* in CMMXU ETC.

Example how CVMMXN is operating:

The following outputs can be observed on the local HMI under **Monitoring/ Servicevalues/SRV1**

S	Apparent three-phase power
P	Active three-phase power
Q	Reactive three-phase power
PF	Power factor
ILAG	I lagging U
ILEAD	I leading U
U	System mean voltage, calculated according to selected mode
I	System mean current, calculated according to selected mode
F	Frequency

The settings for this function is found under **Setting/General setting/Monitoring/ Service values/SRV1**

It can be seen that:

- When system voltage falls below *UGenZeroDB*, the shown value for S, P, Q, PF, ILAG, ILEAD, U and F on the local HMI is forced to zero
- When system current falls below *IGenZeroDB*, the shown value for S, P, Q, PF, ILAG, ILEAD, U and F on the local HMI is forced to zero
- When the value of a single signal falls below the set dead band for that specific signal, the value shown on the local HMI is forced to zero. For example, if apparent three-phase power falls below *SZeroDb* the value for S on the local HMI is forced to zero.

17.1.4 Setting guidelines

The available setting parameters of the measurement function CVMMXN, CMMXU, VMMXU, CMSQI, VMSQI, VNMMXU are depending on the actual hardware (TRM) and the logic configuration made in PCM600.

The parameters for the Measurement functions CVMMXN, CMMXU, VMMXU, CMSQI, VMSQI, VNMMXU are set via the local HMI or PCM600.

GlobalBaseSel: Selects the global base value group used by the function to define (*IBase*), (*VBase*) and (*SBase*).

Operation: *Disabled*/*Enabled*. Every function instance (CVMMXN, CMMXU, VMMXU, CMSQI, VMSQI, VNMMXU) can be taken in operation (*Enabled*) or out of operation (*Disabled*).

The following general settings can be set for the **Measurement function** (CVMMXN).

PowMagFact: Magnitude factor to scale power calculations.

PowAngComp: Angle compensation for phase shift between measured I & V.

Mode: Selection of measured current and voltage. There are 9 different ways of calculating monitored three-phase values depending on the available VT inputs connected to the IED. See parameter group setting table.

k: Low pass filter coefficient for power measurement, V and I.

VGenZeroDb: Minimum level of voltage in % of VBase used as indication of zero voltage (zero point clamping). If measured value is below *VGenZeroDb* calculated S, P, Q and PF will be zero.

IGenZeroDb: Minimum level of current in % of *IBase* used as indication of zero current (zero point clamping). If measured value is below *IGenZeroDb* calculated S, P, Q and PF will be zero.

VMagCompY: Magnitude compensation to calibrate voltage measurements at Y% of Vn, where Y is equal to 5, 30 or 100.

IMagCompY: Magnitude compensation to calibrate current measurements at Y% of In, where Y is equal to 5, 30 or 100.

IAngCompY: Angle compensation to calibrate angle measurements at Y% of In, where Y is equal to 5, 30 or 100.

Parameters *IBase*, *Ubase* and *SBase* have been implemented as a settings instead of a parameters, which means that if the values of the parameters are changed there will be no restart of the application. As restart is required to activate new parameters values, the IED must be restarted in some way. Either manually or by changing some other parameter at the same time.

The following general settings can be set for the **Phase-phase current measurement** (CMMXU).

IMagCompY: Magnitude compensation to calibrate current measurements at Y% of In, where Y is equal to 5, 30 or 100.

IAngCompY: Angle compensation to calibrate angle measurements at Y% of In, where Y is equal to 5, 30 or 100.

The following general settings can be set for the **Phase-phase voltage measurement** (VMMXU).

VMagCompY: Amplitude compensation to calibrate voltage measurements at Y% of Vn, where Y is equal to 5, 30 or 100.

VAngCompY: Angle compensation to calibrate angle measurements at Y% of Vn, where Y is equal to 5, 30 or 100.

The following general settings can be set for **all monitored quantities** included in the functions (CVMMXN, CMMXU, VMMXU, CMSQI, VMSQI, VNMMXU) X in setting names below equals S, P, Q, PF, V, I, F, IA,IB,IC, VA, VB, VCVAB, VBC, VCA, I1, I2, 3I0, V1, V2 or 3V0.

Xmin: Minimum value for analog signal X set directly in applicable measuring unit.

Xmax: Maximum value for analog signal X.

XZeroDb: Zero point clamping. A signal value less than *XZeroDb* is forced to zero.

Observe the related zero point clamping settings in Setting group N for CVMMXN (*VGenZeroDb* and *IGenZeroDb*). If measured value is below *VGenZeroDb* and/or *IGenZeroDb* calculated S, P, Q and PF will be zero and these settings will override *XZeroDb*.

XRepTyp: Reporting type. Cyclic (*Cyclic*), magnitude deadband (*Dead band*) or integral deadband (*Int deadband*). The reporting interval is controlled by the parameter *XDbRepInt*.

XDbRepInt: Reporting deadband setting. Cyclic reporting is the setting value and is reporting interval in seconds. Magnitude deadband is the setting value in % of measuring range. Integral deadband setting is the integral area, that is, measured value in % of measuring range multiplied by the time between two measured values.

XHiHiLim: High-high limit. Set in applicable measuring unit.

XHiLim: High limit.

XLowLim: Low limit.

XLowLowLim: Low-low limit.

XLimHyst: Hysteresis value in % of range and is common for all limits.

All phase angles are presented in relation to defined reference channel. The parameter *PhaseAngleRef* defines the reference, see section "".

Calibration curves

It is possible to calibrate the functions (CVMMXN, CMMXU, VMMXU and VNMMXU) to get class 0.5 presentations of currents, voltages and powers. This is accomplished by magnitude and angle compensation at 5, 30 and 100% of rated current and voltage. The compensation curve will have the characteristic for magnitude and angle compensation of currents as shown in figure 394 (example). The first phase will be used as reference channel and compared with the curve for calculation of factors. The factors will then be used for all related channels.

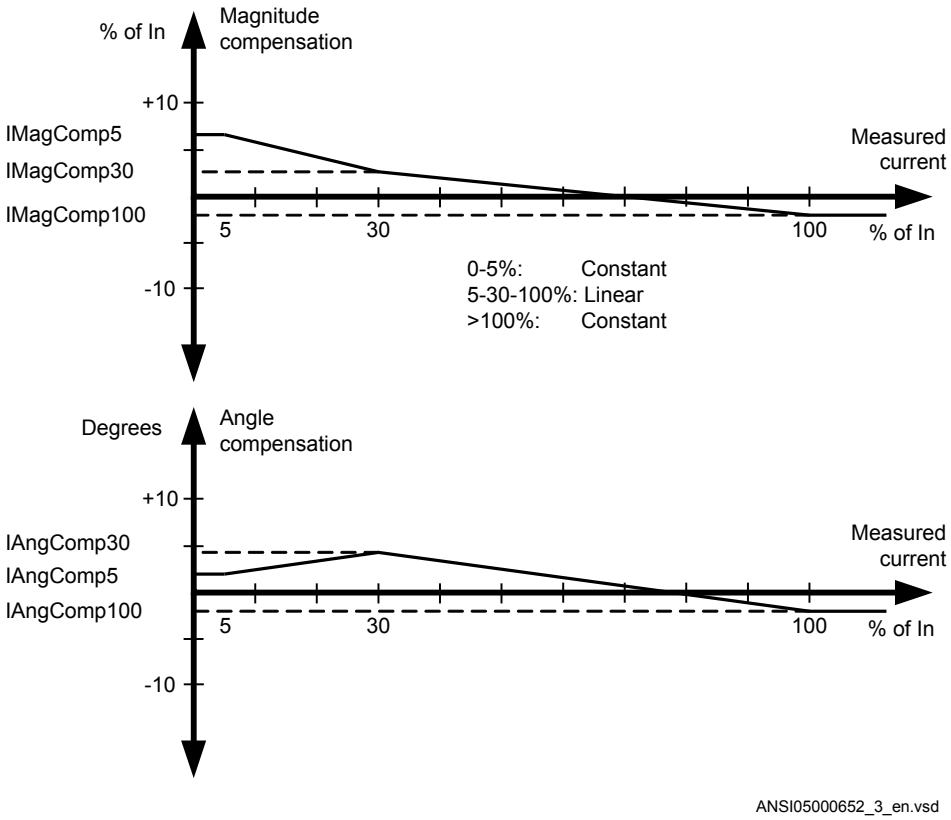

Figure 394: Calibration curves

17.1.4.1 Setting examples

Three setting examples, in connection to Measurement function (CVMMXN), are provided:

- Measurement function (CVMMXN) application for a OHL
- Measurement function (CVMMXN) application on the secondary side of a transformer
- Measurement function (CVMMXN) application for a generator

For each of them detail explanation and final list of selected setting parameters values will be provided.

The available measured values of an IED are depending on the actual hardware (TRM) and the logic configuration made in PCM600.

Measurement function application for a 380kV OHL

Single line diagram for this application is given in figure 395:

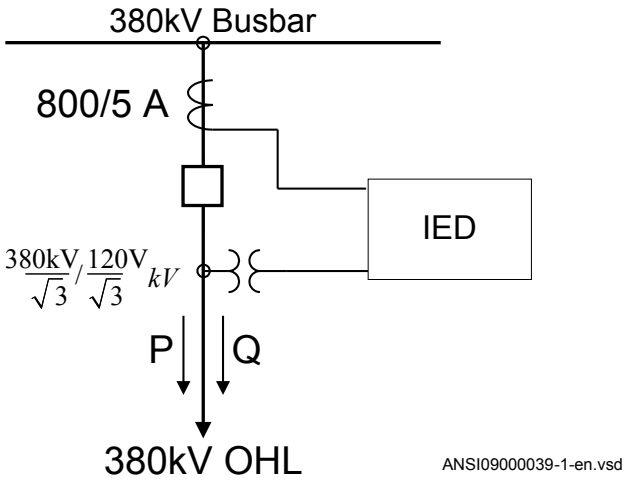

Figure 395: Single line diagram for 380kV OHL application

In order to monitor, supervise and calibrate the active and reactive power as indicated in figure 395 it is necessary to do the following:

1. Set correctly CT and VT data and phase angle reference channel *PhaseAngleRef* (see section "") using PCM600 for analog input channels
2. Connect, in PCM600, measurement function to three-phase CT and VT inputs
3. Set under General settings parameters for the Measurement function:
   - general settings as shown in table 49.
   - level supervision of active power as shown in table 50.
   - calibration parameters as shown in table 51.

Table 49: General settings parameters for the Measurement function

Setting	Short Description	Selected value	Comments
Operation	Operation Off/On	On	Function must be *On*
PowAmpFact	Amplitude factor to scale power calculations	1.000	It can be used during commissioning to achieve higher measurement accuracy. Typically no scaling is required
PowAngComp	Angle compensation for phase shift between measured I & U	0.0	It can be used during commissioning to achieve higher measurement accuracy. Typically no angle compensation is required. As well here required direction of P & Q measurement is towards protected object (as per IED internal default direction)
Mode	Selection of measured current and voltage	L1, L2, L3	All three phase-to-ground VT inputs are available
k	Low pass filter coefficient for power measurement, V and I	0.00	Typically no additional filtering is required
VGenZeroDb	Zero point clamping in % of Ubase	25	Set minimum voltage level to 25%. Voltage below 25% will force S, P and Q to zero.
IGenZeroDb	Zero point clamping in % of Ibase	3	Set minimum current level to 3%. Current below 3% will force S, P and Q to zero.
VBase (set in Global base)	Base setting for voltage level in kV	400.00	Set rated OHL phase-to-phase voltage
IBase (set in Global base)	Base setting for current level in A	800	Set rated primary CT current used for OHL

Table 50: Settings parameters for level supervision

Setting	Short Description	Selected value	Comments
PMin	Minimum value	-100	Minimum expected load
PMax	Minimum value	100	Maximum expected load
PZeroDb	Zero point clamping in 0.001% of range	3000	Set zero point clamping to 45 MW that is, 3% of 200 MW
PRepTyp	Reporting type	db	Select magnitude deadband supervision
PDbRepInt	Cycl: Report interval (s), Db: In % of range, Int Db: In %s	2	Set ±Δdb=30 MW that is, 2% (larger changes than 30 MW will be reported)
PHiHiLim	High High limit (physical value)	60	High alarm limit that is, extreme overload alarm
PHiLim	High limit (physical value)	50	High warning limit that is, overload warning
Table continues on next page			

Setting	Short Description	Selected value	Comments
PLowLim	Low limit (physical value)	-50	Low warning limit. Not active
PLowLowlLim	Low Low limit (physical value)	-60	Low alarm limit. Not active
PLimHyst	Hysteresis value in % of range (common for all limits)	2	Set ±Δ Hysteresis MW that is, 2%

Table 51: Settings for calibration parameters

Setting	Short Description	Selected value	Comments
IMagComp5	Magnitude factor to calibrate current at 5% of In	0.00	
IMagComp30	Magnitude factor to calibrate current at 30% of In	0.00	
IMagComp100	Magnitude factor to calibrate current at 100% of In	0.00	
VAmpComp5	Magnitude factor to calibrate voltage at 5% of Vn	0.00	
VMagComp30	Magnitude factor to calibrate voltage at 30% of Vn	0.00	
VMagComp100	Magnitude factor to calibrate voltage at 100% of Vn	0.00	
IAngComp5	Angle calibration for current at 5% of In	0.00	
IAngComp30	Angle pre-calibration for current at 30% of In	0.00	
IAngComp100	Angle pre-calibration for current at 100% of In	0.00	

Measurement function application for a power transformer

Single line diagram for this application is given in figure 396.

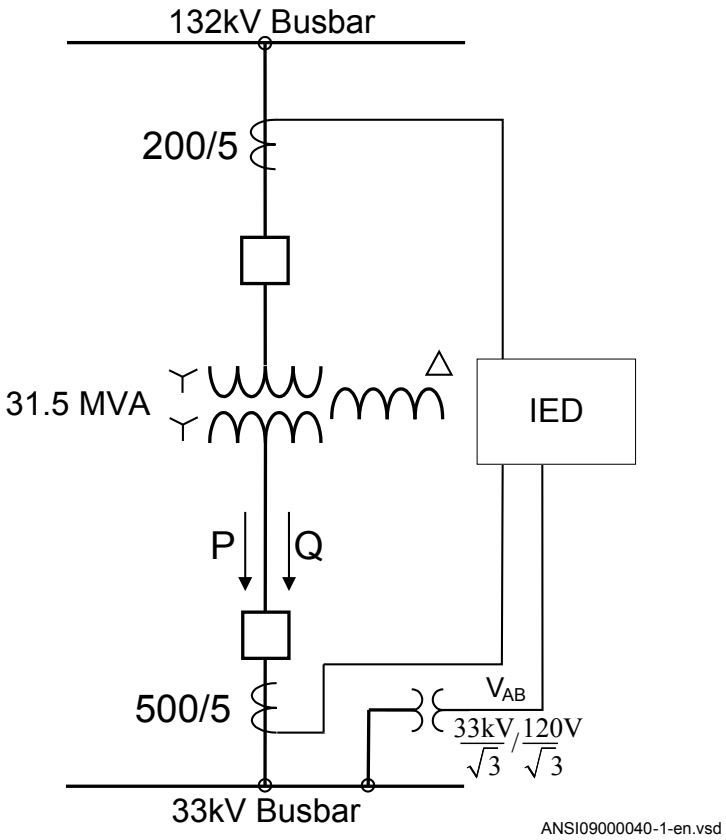

Figure 396: Single line diagram for transformer application

In order to measure the active and reactive power as indicated in figure 396, it is necessary to do the following:

1. Set correctly all CT and VT and phase angle reference channel *PhaseAngleRef* (see section "") data using PCM600 for analog input channels
2. Connect, in PCM600, measurement function to LV side CT & VT inputs
3. Set the setting parameters for relevant Measurement function as shown in the following table 52:

Table 52: General settings parameters for the Measurement function

Setting	Short description	Selected value	Comment
Operation	Operation *Disabled*/*Enabled*	*Enabled*	Function must be *Enabled*
PowAmpFact	Magnitude factor to scale power calculations	1.000	Typically no scaling is required
PowAngComp	Angle compensation for phase shift between measured I & V	180.0	Typically no angle compensation is required. However here the required direction of P & Q measurement is towards busbar (Not per IED internal default direction). Therefore angle compensation have to be used in order to get measurements in aliment with the required direction.
Mode	Selection of measured current and voltage	L1L2	Only UL1L2 phase-to-phase voltage is available
k	Low pass filter coefficient for power measurement, V and I	0.00	Typically no additional filtering is required
VGenZeroDb	Zero point clamping in % of Vbase	25	Set minimum voltage level to 25%
IGenZeroDb	Zero point clamping in % of Ibase	3	Set minimum current level to 3%
VBase (set in Global base)	Base setting for voltage level in kV	35.00	Set LV side rated phase-to-phase voltage
IBase (set in Global base)	Base setting for current level in A	495	Set transformer LV winding rated current

Measurement function application for a generator

Single line diagram for this application is given in figure 397.

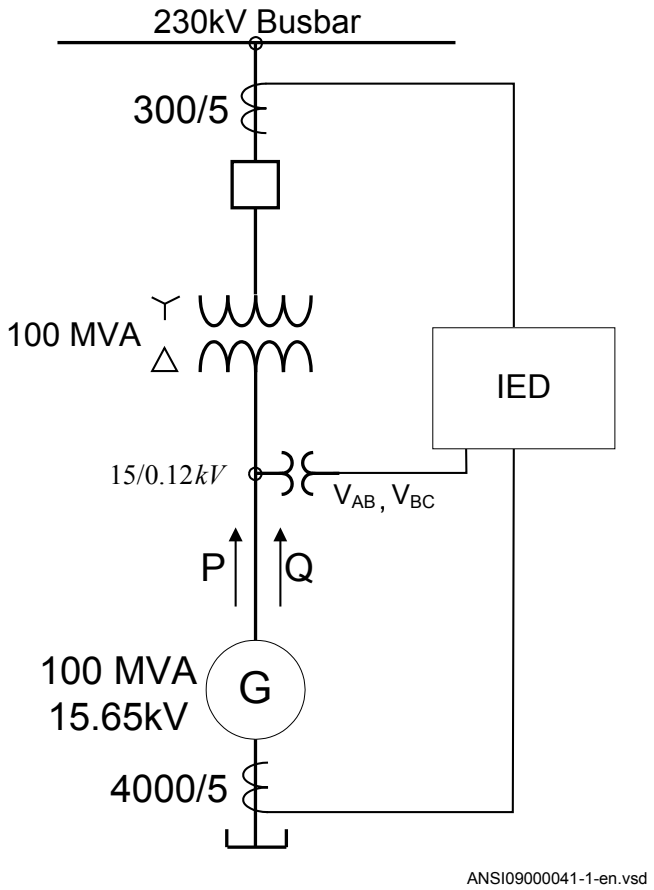

Figure 397: Single line diagram for generator application

In order to measure the active and reactive power as indicated in figure 397, it is necessary to do the following:

1. Set correctly all CT and VT data and phase angle reference channel *PhaseAngleRef*(see section "") using PCM600 for analog input channels
2. Connect, in PCM600, measurement function to the generator CT & VT inputs
3. Set the setting parameters for relevant Measurement function as shown in the following table:

Table 53: General settings parameters for the Measurement function

Setting	Short description	Selected value	Comment
Operation	Operation Off/On	On	Function must be *On*
PowAmpFact	Amplitude factor to scale power calculations	1.000	Typically no scaling is required
PowAngComp	Angle compensation for phase shift between measured I & V	0.0	Typically no angle compensation is required. As well here required direction of P & Q measurement is towards protected object (as per IED internal default direction)
Mode	Selection of measured current and voltage	Arone	Generator VTs are connected between phases (V-connected)
k	Low pass filter coefficient for power measurement, V and I	0.00	Typically no additional filtering is required
VGenZeroDb	Zero point clamping in % of Vbase	25%	Set minimum voltage level to 25%
IGenZeroDb	Zero point clamping in % of Ibase	3	Set minimum current level to 3%
VBase (set in Global base)	Base setting for voltage level in kV	15,65	Set generator rated phase-to-phase voltage
IBase (set in Global base)	Base setting for current level in A	3690	Set generator rated current

17.2 Gas medium supervision SSIMG (63)

17.2.1 Identification

Function description	IEC 61850 identification	IEC 60617 identification	ANSI/IEEE C37.2 device number
Gas medium supervision	SSIMG	-	63

17.2.2 Application

Gas medium supervision (SSIMG ,63) is used for monitoring the circuit breaker condition. Proper arc extinction by the compressed gas in the circuit breaker is very important. When the pressure becomes too low compared to the required value, the circuit breaker operation shall be blocked to minimize the risk of internal failure. Binary information based on the gas pressure in the circuit breaker is used as an input signal to the function. The function generates alarms based on the received information.

17.3 Liquid medium supervision SSIML (71)

17.3.1 Identification

Function description	IEC 61850 identification	IEC 60617 identification	ANSI/IEEE C37.2 device number
Liquid medium supervision	SSIML	-	71

17.3.2 Application

Liquid medium supervision (SSIML ,71) is used for monitoring the circuit breaker condition. Proper arc extinction by the compressed oil in the circuit breaker is very important. When the level becomes too low, compared to the required value, the circuit breaker operation is blocked to minimize the risk of internal failures. Binary information based on the oil level in the circuit breaker is used as input signals to the function. In addition to that, the function generates alarms based on received information.

17.4 Breaker monitoring SSCBR

17.4.1 Identification

Function description	IEC 61850 identification	IEC 60617 identification	ANSI/IEEE C37.2 device number
Breaker monitoring	SSCBR	-	-

17.4.2 Application

The circuit breaker maintenance is usually based on regular time intervals or the number of operations performed. This has some disadvantages because there could be a number of abnormal operations or few operations with high-level currents within the predetermined maintenance interval. Hence, condition-based maintenance scheduling is an optimum solution in assessing the condition of circuit breakers.

Circuit breaker contact travel time

Auxiliary contacts provide information about the mechanical operation, opening time and closing time of a breaker. Detecting an excessive traveling time is essential to indicate the need for maintenance of the circuit breaker mechanism. The excessive travel time can be due to problems in the driving mechanism or failures of the contacts.

Circuit breaker status

Monitoring the breaker status ensures proper functioning of the features within the protection relay such as breaker control, breaker failure and autoreclosing. The breaker status is monitored using breaker auxiliary contacts. The breaker status is indicated by the binary outputs. These signals indicate whether the circuit breaker is in an open, closed or error state.

Remaining life of circuit breaker

Every time the breaker operates, the circuit breaker life reduces due to wear. The wear in a breaker depends on the interrupted current. For breaker maintenance or replacement at the right time, the remaining life of the breaker must be estimated. The remaining life of a breaker can be estimated using the maintenance curve provided by the circuit breaker manufacturer.

Circuit breaker manufacturers provide the number of make-break operations possible at various interrupted currents. An example is shown in Figure398.

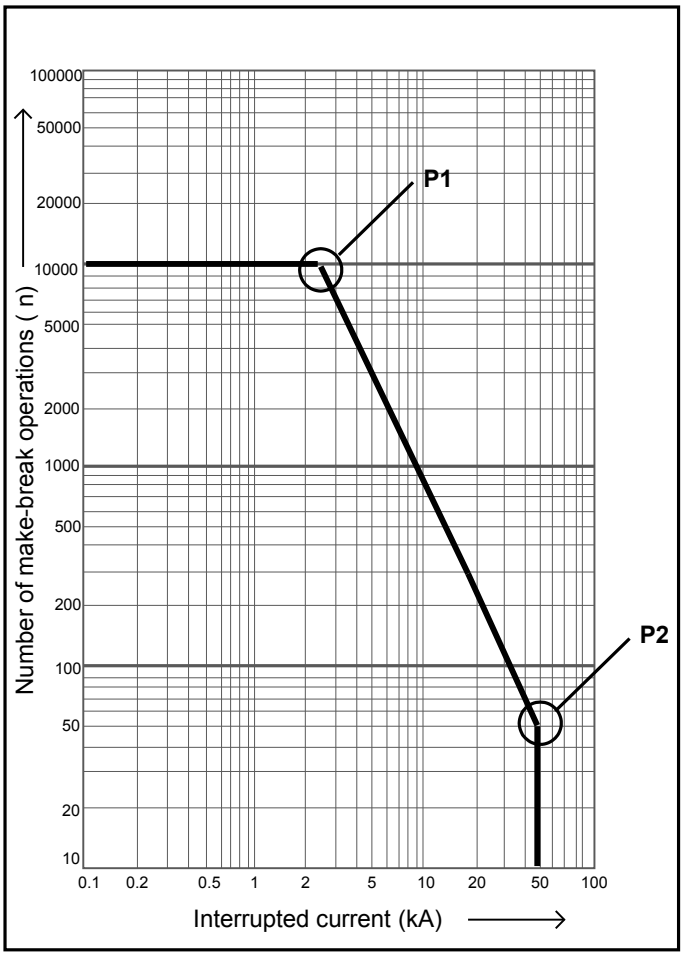

Figure 398: An example for estimating the remaining life of a circuit breaker

Calculation for estimating the remaining life

The graph shows that there are 10000 possible operations at the rated operating current and 900 operations at 10 kA and 50 operations at rated fault current. Therefore, if the interrupted current is 10 kA, one operation is equivalent to 10000/900 = 11 operations at the rated current. It is assumed that prior to tripping, the remaining life of a breaker is 10000 operations. Remaining life calculation for three different interrupted current conditions is explained below.

- Breaker interrupts at and below the rated operating current, that is, 2 kA, the remaining life of the CB is decreased by 1 operation and therefore, 9999 operations remaining at the rated operating current.
- Breaker interrupts between rated operating current and rated fault current, that is, 10 kA, one operation at 10kA is equivalent to 10000/900 = 11 operations at the

rated current. The remaining life of the CB would be (10000 – 10) = 9989 at the rated operating current after one operation at 10 kA.

- Breaker interrupts at and above rated fault current, that is, 50 kA, one operation at 50 kA is equivalent to 10000/50 = 200 operations at the rated operating current. The remaining life of the CB would become (10000 – 200) = 9800 operations at the rated operating current after one operation at 50 kA.

Accumulated energy

Monitoring the contact erosion and interrupter wear has a direct influence on the required maintenance frequency. Therefore, it is necessary to accurately estimate the erosion of the contacts and condition of interrupters using cumulative summation of I^y. The factor "y" depends on the type of circuit breaker. The energy values were accumulated using the current value and exponent factor for CB contact opening duration. When the next CB opening operation is started, the energy is accumulated from the previous value. The accumulated energy value can be reset to initial accumulation energy value by using the Reset accumulating energy input, `RSTIPOW`.

Circuit breaker operation cycles

Routine breaker maintenance like lubricating breaker mechanism is based on the number of operations. A suitable threshold setting helps in preventive maintenance. This can also be used to indicate the requirement for oil sampling for dielectric testing in case of an oil circuit breaker.

Circuit breaker operation monitoring

By monitoring the activity of the number of operations, it is possible to calculate the number of days the breaker has been inactive. Long periods of inactivity degrade the reliability for the protection system.

Circuit breaker spring charge monitoring

For normal circuit breaker operation, the circuit breaker spring should be charged within a specified time. Detecting a long spring charging time indicates the time for circuit breaker maintenance. The last value of the spring charging time can be given as a service value.

Circuit breaker gas pressure indication

For proper arc extinction by the compressed gas in the circuit breaker, the pressure of the gas must be adequate. Binary input available from the pressure sensor is based on the pressure levels inside the arc chamber. When the pressure becomes too low compared to the required value, the circuit breaker operation is blocked.

17.4.3 Setting guidelines

The breaker monitoring function is used to monitor different parameters of the circuit breaker. The breaker requires maintenance when the number of operations has reached a predefined value. For proper functioning of the circuit breaker, it is also essential to monitor the circuit breaker operation, spring charge indication or breaker wear, travel time, number of operation cycles and accumulated energy during arc extinction.

17.4.3.1 Setting procedure on the IED

The parameters for breaker monitoring (SSCBR) can be set using the local HMI or Protection and Control Manager (PCM600).

Common base IED values for primary current (*IBase*), primary voltage (*VBase*) and primary power (*SBase*) are set in Global base values for settings function GBASVAL.

GlobalBaseSel: It is used to select a GBASVAL function for reference of base values.

Operation: *Enabled* or *Disabled*.

IBase: Base phase current in primary A. This current is used as reference for current settings.

OpenTimeCorr: Correction factor for circuit breaker opening travel time.

CloseTimeCorr: Correction factor for circuit breaker closing travel time.

tTrOpenAlm: Setting of alarm level for opening travel time.

tTrCloseAlm: Setting of alarm level for closing travel time.

OperAlmLevel: Alarm limit for number of mechanical operations.

OperLOLevel: Lockout limit for number of mechanical operations.

CurrExponent: Current exponent setting for energy calculation. It varies for different types of circuit breakers. This factor ranges from *0.5* to *3.0*.

AccStopCurr: RMS current setting below which calculation of energy accumulation stops. It is given as a percentage of *IBase*.

ContTrCorr: Correction factor for time difference in auxiliary and main contacts' opening time.

AlmAccCurrPwr: Setting of alarm level for accumulated energy.

LOAccCurrPwr: Lockout limit setting for accumulated energy.

SpChAlmTime: Time delay for spring charging time alarm.

tDGasPresAlm: Time delay for gas pressure alarm.

tDGasPresLO: Time delay for gas pressure lockout.

DirCoef: Directional coefficient for circuit breaker life calculation.

RatedOperCurr: Rated operating current of the circuit breaker.

RatedFltCurr: Rated fault current of the circuit breaker.

OperNoRated: Number of operations possible at rated current.

OperNoFault: Number of operations possible at rated fault current.

CBLifeAlmLevel: Alarm level for circuit breaker remaining life.

AccSelCal: Selection between the method of calculation of accumulated energy.

OperTimeDelay: Time delay between change of status of trip output and start of main contact separation.

17.5 Event function EVENT

17.5.1 Identification

Function description	IEC 61850 identification	IEC 60617 identification	ANSI/IEEE C37.2 device number
Event function	EVENT		-

17.5.2 Application

When using a Substation Automation system with LON or SPA communication, time-tagged events can be sent at change or cyclically from the IED to the station level. These events are created from any available signal in the IED that is connected to the Event function (EVENT). The event function block is used for remote communication.

Analog and double indication values are also transferred through EVENT function.

17.5.3 Setting guidelines

The parameters for the Event (EVENT) function are set via the local HMI or PCM600.

EventMask (Ch_1 - 16)

The inputs can be set individually as:

- *NoEvents*
- *OnSet*, at pick-up of the signal
- *OnReset*, at drop-out of the signal
- *OnChange*, at both pick-up and drop-out of the signal
- *AutoDetect*

LONChannelMask or *SPAChannelMask*

Definition of which part of the event function block that shall generate events:

- *Disabled*
- *Channel 1-8*
- *Channel 9-16*
- *Channel 1-16*

MinRepIntVal (1 - 16)

A time interval between cyclic events can be set individually for each input channel. This can be set between 0.0 s to 1000.0 s in steps of 0.1 s. It should normally be set to 0, that is, no cyclic communication.

It is important to set the time interval for cyclic events in an optimized way to minimize the load on the station bus.

17.6 Disturbance report DRPRDRE

17.6.1 Identification

Function description	IEC 61850 identification	IEC 60617 identification	ANSI/IEEE C37.2 device number
Analog input signals	A41RADR	-	-
Disturbance report	DRPRDRE	-	-
Disturbance report	A1RADR	-	-
Table continues on next page			

Function description	IEC 61850 identification	IEC 60617 identification	ANSI/IEEE C37.2 device number
Disturbance report	A2RADR	-	-
Disturbance report	A3RADR	-	-
Disturbance report	A4RADR	-	-
Disturbance report	B1RBDR	-	-
Disturbance report	B2RBDR	-	-
Disturbance report	B3RBDR	-	-
Disturbance report	B4RBDR	-	-
Disturbance report	B5RBDR	-	-
Disturbance report	B6RBDR	-	-

17.6.2 Application

To get fast, complete and reliable information about disturbances in the primary and/or in the secondary system it is very important to gather information on fault currents, voltages and events. It is also important having a continuous event-logging to be able to monitor in an overview perspective. These tasks are accomplished by the disturbance report function DRPRDRE and facilitate a better understanding of the power system behavior and related primary and secondary equipment during and after a disturbance. An analysis of the recorded data provides valuable information that can be used to explain a disturbance, basis for change of IED setting plan, improve existing equipment, and so on. This information can also be used in a longer perspective when planning for and designing new installations, that is, a disturbance recording could be a part of Functional Analysis (FA).

Disturbance report DRPRDRE, always included in the IED, acquires sampled data of all selected analog and binary signals connected to the function blocks that is,

- maximum 30 external analog signals,
- 10 internal derived analog signals, and
- 96 binary signals.

Disturbance report function is a common name for several functions that is, Indications (IND), Event recorder (ER), Sequential of events (SOE), Trip value recorder (TVR), Disturbance recorder (DR) and Fault locator (FL).

Disturbance report function is characterized by great flexibility as far as configuration, starting conditions, recording times, and large storage capacity are concerned. Thus, disturbance report is not dependent on the operation of protective functions, and it can record disturbances that were not discovered by protective functions for one reason or another. Disturbance report can be used as an advanced stand-alone disturbance recorder.

Every disturbance report recording is saved in the IED. The same applies to all events, which are continuously saved in a ring-buffer. Local HMI can be used to get information about the recordings, and the disturbance report files may be uploaded in the PCM600 using the Disturbance handling tool, for report reading or further analysis (using WaveWin, that can be found on the PCM600 installation CD). The user can also upload disturbance report files using FTP or MMS (over 61850–8–1) clients.

If the IED is connected to a station bus (IEC 61850-8-1), the disturbance recorder (record made and fault number) and the fault locator information are available as GOOSE or Report Control data. The same information is obtainable if IEC60870-5-103 is used.

17.6.3 Setting guidelines

The setting parameters for the Disturbance report function DRPRDRE are set via the local HMI or PCM600.

It is possible to handle up to 40 analog and 96 binary signals, either internal signals or signals coming from external inputs. The binary signals are identical in all functions that is, Disturbance recorder (DR), Event recorder (ER), Indication (IND), Trip value recorder (TVR) and Sequential of events (SOE) function.

User-defined names of binary and analog input signals is set using PCM600. The analog and binary signals appear with their user-defined names. The name is used in all related functions (Disturbance recorder (DR), Event recorder (ER), Indication (IND), Trip value recorder (TVR) and Sequential of events (SOE)).

Figure 399 shows the relations between Disturbance report, included functions and function blocks. Sequential of events (SOE), Event recorder (ER) and Indication (IND) uses information from the binary input function blocks (BxRBDR). Trip value recorder (TVR) uses analog information from the analog input function blocks (AxRADR), which is used by Fault locator (FL) after estimation by Trip Value Recorder (TVR). Disturbance report function acquires information from both AxRADR and BxRBDR.

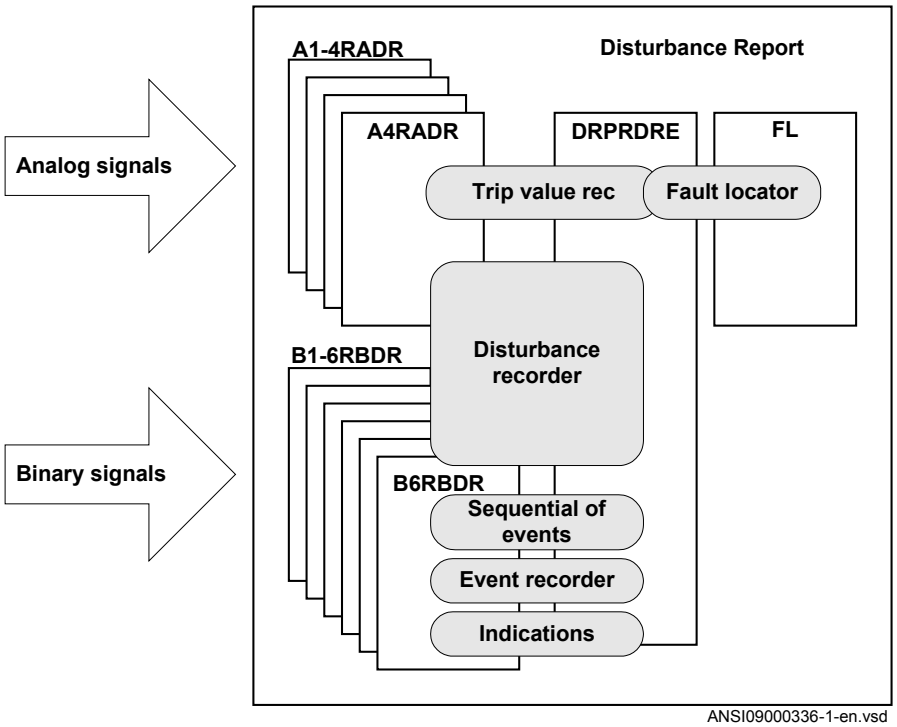

Figure 399: Disturbance report functions and related function blocks

For Disturbance report function there are a number of settings which also influences the sub-functions.

Three LED indications placed above the LCD screen makes it possible to get quick status information about the IED.

Green LED:	
Steady light	In Service
Flashing light	Internal failure
Dark	No power supply
Yellow LED:	
Steady light	A Disturbance Report is triggered
Flashing light	The IED is in test mode
Red LED:	
Steady light	Triggered on binary signal N with *SetLEDN* = *Enabled*

Operation

The operation of Disturbance report function DRPRDRE has to be set *Enabled* or *Disabled*. If *Disabled* is selected, note that no disturbance report is registered, and none sub-function will operate (the only general parameter that influences Sequential of events (SOE)).

Operation = Disabled:

- Disturbance reports are not stored.
- LED information (yellow - pickup, red - trip) is not stored or changed.

Operation = Enabled:

- Disturbance reports are stored, disturbance data can be read from the local HMI and from a PC using PCM600.
- LED information (yellow - pickup, red - trip) is stored.

Every recording will get a number (0 to 999) which is used as identifier (local HMI, disturbance handling tool and IEC 61850). An alternative recording identification is date, time and sequence number. The sequence number is automatically increased by one for each new recording and is reset to zero at midnight. The maximum number of recordings stored in the IED is 100. The oldest recording will be overwritten when a new recording arrives (FIFO).

To be able to delete disturbance records, *Operation* parameter has to be *Enabled*.

The maximum number of recordings depend on each recordings total recording time. Long recording time will reduce the number of recordings to less than 100.

The IED flash disk should NOT be used to store any user files. This might cause disturbance recordings to be deleted due to lack of disk space.

17.6.3.1 Recording times

Prefault recording time (*PreFaultRecT*) is the recording time before the starting point of the disturbance. The setting should be at least *0.1* s to ensure enough samples for the estimation of pre-fault values in the Trip value recorder (TVR) function.

Postfault recording time (*PostFaultRecT*) is the maximum recording time after the disappearance of the trig-signal (does not influence the Trip value recorder (TVR) function).

Recording time limit (*TimeLimit*) is the maximum recording time after trig. The parameter limits the recording time if some trigging condition (fault-time) is very long or permanently set (does not influence the Trip value recorder (TVR) function).

Post retrigger (*PostRetrig*) can be set to *Enabled* or *Disabled*. Makes it possible to choose performance of Disturbance report function if a new trig signal appears in the post-fault window.

PostRetrig = Disabled

The function is insensitive for new trig signals during post fault time.

PostRetrig = Enabled

The function completes current report and starts a new complete report that is, the latter will include:

- new pre-fault- and fault-time (which will overlap previous report)
- events and indications might be saved in the previous report too, due to overlap
- new fault locator and trip value calculations if installed, in operation and started

Operation in test mode

If the IED is in test mode and *OpModeTest = Disabled*. Disturbance report function does not save any recordings and no LED information is displayed.

If the IED is in test mode and *OpModeTest = Enabled*. Disturbance report function works in normal mode and the status is indicated in the saved recording.

17.6.3.2 Binary input signals

Up to 96 binary signals can be selected among internal logical and binary input signals. The configuration tool is used to configure the signals.

For each of the 96 signals, it is also possible to select if the signal is to be used as a trigger for the start of the Disturbance report and if the trigger should be activated on positive (1) or negative (0) slope.

TrigDRN: Disturbance report may trig for binary input N (*Enabled*) or not (*Disabled*).

TrigLevelN: Trig on positive (*Trig on 1*) or negative (*Trig on 0*) slope for binary input N.

Func103N: Function type number (0-255) for binary input N according to IEC-60870-5-103, that is, 128: Distance protection, 160: overcurrent protection, 176: transformer differential protection and 192: line differential protection.

Info103N: Information number (0-255) for binary input N according to IEC-60870-5-103, that is, 69-71: Trip L1-L3, 78-83: Zone 1-6.

See also description in the chapter IEC 60870-5-103.

17.6.3.3 Analog input signals

Up to 40 analog signals can be selected among internal analog and analog input signals. PCM600 is used to configure the signals.

For retrieving remote data from LDCM module, the Disturbance report function should not be connected to a 3 ms SMAI function block if this is the only intended use for the remote data.

The analog trigger of Disturbance report is not affected if analog input M is to be included in the disturbance recording or not (*OperationM = Enabled*/*Disabled*).

If *OperationM = Disabled*, no waveform (samples) will be recorded and reported in graph. However, Trip value, pre-fault and fault value will be recorded and reported. The input channel can still be used to trig the disturbance recorder.

If *OperationM = Enabled*, waveform (samples) will also be recorded and reported in graph.

NomValueM: Nominal value for input M.

OverTrigOpM, *UnderTrigOpM*: Over or Under trig operation, Disturbance report may trig for high/low level of analog input M (*Enabled*) or not (*Disabled*).

OverTrigLeM, *UnderTrigLeM*: Over or under trig level, Trig high/low level relative nominal value for analog input M in percent of nominal value.

17.6.3.4 Sub-function parameters

All functions are in operation as long as Disturbance report is in operation.

Indications

IndicationMaN: Indication mask for binary input N. If set (*Show*), a status change of that particular input, will be fetched and shown in the disturbance summary on local HMI. If not set (*Hide*), status change will not be indicated.

SetLEDN: Set red LED on local HMI in front of the IED if binary input N changes status.

Disturbance recorder

OperationM: Analog channel M is to be recorded by the disturbance recorder (*Enabled*) or not (*Disabled*).

If *OperationM* = *Disabled*, no waveform (samples) will be recorded and reported in graph. However, Trip value, pre-fault and fault value will be recorded and reported. The input channel can still be used to trig the disturbance recorder.

If *OperationM* = *Enabled*, waveform (samples) will also be recorded and reported in graph.

Event recorder

Event recorder (ER) function has no dedicated parameters.

Trip value recorder

ZeroAngleRef: The parameter defines which analog signal that will be used as phase angle reference for all other analog input signals. This signal will also be used for frequency measurement and the measured frequency is used when calculating trip values. It is suggested to point out a sampled voltage input signal, for example, a line or busbar phase voltage (channel 1-30).

Sequential of events

function has no dedicated parameters.

17.6.3.5 Consideration

The density of recording equipment in power systems is increasing, since the number of modern IEDs, where recorders are included, is increasing. This leads to a vast number of recordings at every single disturbance and a lot of information has to be handled if the recording functions do not have proper settings. The goal is to optimize the settings in each IED to be able to capture just valuable disturbances and to maximize the number that is possible to save in the IED.

The recording time should not be longer than necessary (*PostFaultrecT* and *TimeLimit*).

- Should the function record faults only for the protected object or cover more?
- How long is the longest expected fault clearing time?
- Is it necessary to include reclosure in the recording or should a persistent fault generate a second recording (*PostRetrig*)?

Minimize the number of recordings:

- Binary signals: Use only relevant signals to start the recording that is, protection trip, carrier receive and/or pickup signals.
- Analog signals: The level triggering should be used with great care, since unfortunate settings will cause enormously number of recordings. If nevertheless

analog input triggering is used, chose settings by a sufficient margin from normal operation values. Phase voltages are not recommended for trigging.

Remember that values of parameters set elsewhere are linked to the information on a report. Such parameters are, for example, station and object identifiers, CT and VT ratios.

17.7 Logical signal status report BINSTATREP

17.7.1 Identification

Function description	IEC 61850 identification	IEC 60617 identification	ANSI/IEEE C37.2 device number
Logical signal status report	BINSTATREP	-	-

17.7.2 Application

The Logical signal status report (BINSTATREP) function makes it possible for a SPA master to poll signals from various other function blocks.

BINSTATREP has 16 inputs and 16 outputs. The output status follows the inputs and can be read from the local HMI or via SPA communication.

When an input is set, the respective output is set for a user defined time. If the input signal remains set for a longer period, the output will remain set until the input signal resets.

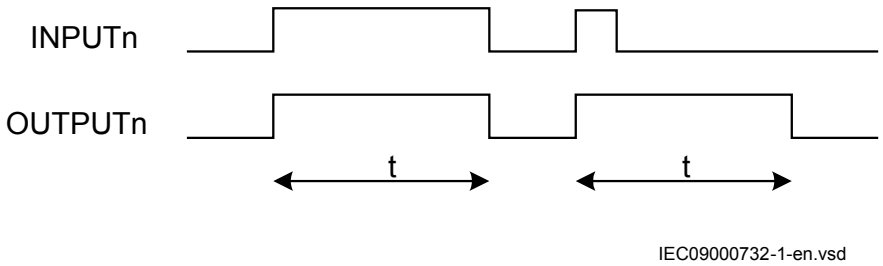

Figure 400: BINSTATREP logical diagram

17.7.3 Setting guidelines

The pulse time *t* is the only setting for the Logical signal status report (BINSTATREP). Each output can be set or reset individually, but the pulse time will be the same for all outputs in the entire BINSTATREP function.

17.8 Fault locator LMBRFLO

17.8.1 Identification

Function description	IEC 61850 identification	IEC 60617 identification	ANSI/IEEE C37.2 device number
Fault locator	LMBRFLO	-	-

17.8.2 Application

The main objective of line protection and monitoring IEDs is fast, selective and reliable operation for faults on a protected line section. Besides this, information on distance to fault is very important for those involved in operation and maintenance. Reliable information on the fault location greatly decreases the downtime of the protected lines and increases the total availability of a power system.

The fault locator is started with the input CALCDIST to which trip signals indicating in-line faults are connected, typically distance protection zone 1 and accelerating zone or the line differential protection. The disturbance report must also be started for the same faults since the function uses pre- and post-fault information from the trip value recorder function (TVR).

Beside this information the function must be informed about faulted phases for correct loop selection (phase selective outputs from differential protection, distance protection, directional OC protection, and so on). The following loops are used for different types of faults:

- for 3 phase faults: loop A-B.
- for 2 phase faults: the loop between the faulted phases.
- for 2 phase-to-ground faults: the loop between the faulted phases.
- for phase-to-ground faults: the phase-to-ground loop.

LMBRFLO function indicates the distance to fault as a percentage of the line length, in kilometers or miles as selected on the local HMI. *LineLengthUnit* setting is used to select the unit of length either, in *kilometer* or *miles* for the distance to fault. The distance to the fault, which is calculated with a high accuracy, is stored together with

the recorded disturbances. This information can be read on the local HMI, uploaded to PCM600 and is available on the station bus according to IEC 61850–8–1.

The distance to fault can be recalculated on the local HMI by using the measuring algorithm for different fault loops or for changed system parameters.

17.8.3 Setting guidelines

The parameters for the Fault locator function are set via the local HMI or PCM600.

The Fault locator algorithm uses phase voltages, phase currents and residual current in observed bay (protected line) and residual current from a parallel bay (line, which is mutual coupled to protected line).

The Fault locator has close connection to the Disturbance report function. All external analog inputs (channel 1-30), connected to the Disturbance report function, are available to the Fault locator and the function uses information calculated by the Trip value recorder. After allocation of analog inputs to the Disturbance report function, the user has to point out which analog inputs to be used by the Fault locator. According to the default settings the first four analog inputs are currents and next three are voltages in the observed bay (no parallel line expected since chosen input is set to zero). Use the Parameter Setting tool within PCM600 for changing analog configuration.

The list of parameters explains the meaning of the abbreviations. Figure 401 also presents these system parameters graphically. Note, that all impedance values relate to their primary values and to the total length of the protected line.

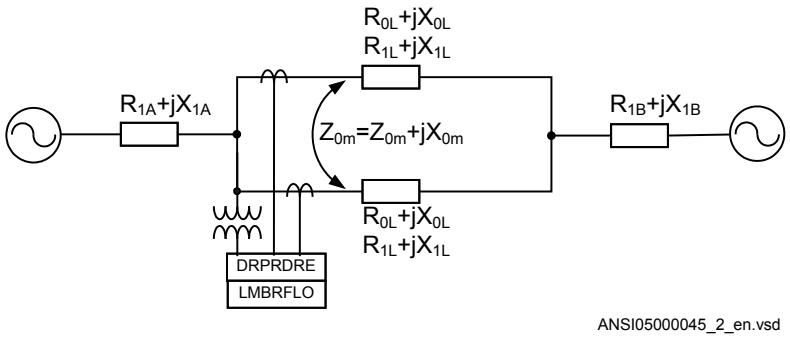

Figure 401: Simplified network configuration with network data, required for settings of the fault location-measuring function

For a single-circuit line (no parallel line), the figures for mutual zero-sequence impedance (X_{0M}, R_{0M}) and analog input are set at zero.

Power system specific parameter settings shown in table 2 are not general settings but specific setting included in the setting groups, that is, this makes it possible to change conditions for the Fault locator with short notice by changing setting group.

The source impedance is not constant in the network. However, this has a minor influence on the accuracy of the distance-to-fault calculation, because only the phase angle of the distribution factor has an influence on the accuracy. The phase angle of the distribution factor is normally very low and practically constant, because the positive sequence line impedance, which has an angle close to 90°, dominates it. Always set the source impedance resistance to values other than zero. If the actual values are not known, the values that correspond to the source impedance characteristic angle of 85° give satisfactory results.

17.8.3.1 Connection of analog currents

Connection diagram for analog currents included IN from parallel line shown in figure 402

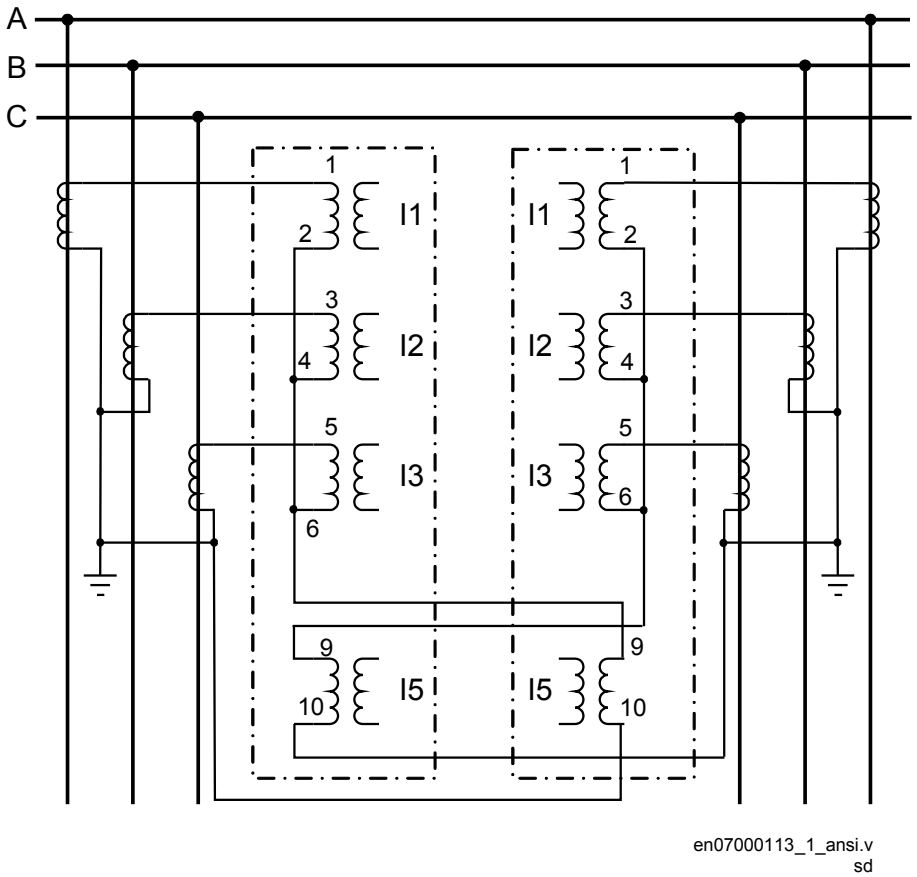

Figure 402: Example of connection of parallel line IN for Fault locator LMBRFLO

17.9 Limit counter L4UFCNT

17.9.1 Identification

Function description	IEC 61850 identification	IEC 60617 identification	ANSI/IEEE C37.2 device number
Limit counter	L4UFCNT		-

17.9.2 Application

Limit counter (L4UFCNT) is intended for applications where positive and/or negative sides on a binary signal need to be counted.

The limit counter provides four independent limits to be checked against the accumulated counted value. The four limit reach indication outputs can be utilized to initiate proceeding actions. The output indicators remain high until the reset of the function.

It is also possible to initiate the counter from a non-zero value by resetting the function to the wanted initial value provided as a setting.

If applicable, the counter can be set to stop or rollover to zero and continue counting after reaching the maximum count value. The steady overflow output flag indicates the next count after reaching the maximum count value. It is also possible to set the counter to rollover and indicate the overflow as a pulse, which lasts up to the first count after rolling over to zero. In this case, periodic pulses will be generated at multiple overflow of the function.

17.9.2.1 Setting guidelines

The parameters for Limit counter L4UFCNT are set via the local HMI or PCM600.

Section 18 Metering

18.1 Pulse-counter logic PCFCNT

18.1.1 Identification

Function description	IEC 61850 identification	IEC 60617 identification	ANSI/IEEE C37.2 device number
Pulse-counter logic	PCFCNT	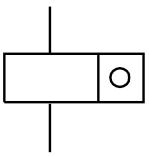	-

18.1.2 Application

Pulse-counter logic (PCFCNT) function counts externally generated binary pulses, for instance pulses coming from an external energy meter, for calculation of energy consumption values. The pulses are captured by the binary input module (BIM), and read by the PCFCNT function. The number of pulses in the counter is then reported via the station bus to the substation automation system or read via the station monitoring system as a service value. When using IEC 61850–8–1, a scaled service value is available over the station bus.

The normal use for this function is the counting of energy pulses from external energy meters. An optional number of inputs from an arbitrary input module in IED can be used for this purpose with a frequency of up to 40 Hz. The pulse-counter logic PCFCNT can also be used as a general purpose counter.

18.1.3 Setting guidelines

From PCM600, these parameters can be set individually for each pulse counter:

- *Operation*: *Disabled*/*Enabled*
- *tReporting*: *0-3600s*
- *EventMask*: *NoEvents*/*ReportEvents*

The configuration of the inputs and outputs of the pulse counter-logic PCFCNT function block is made with PCM600.

On the Binary Input Module, the debounce filter time is fixed to 5 ms, that is, the counter suppresses pulses with a pulse length less than 5 ms. The input oscillation blocking frequency is preset to 40 Hz. That means that the counter finds the input oscillating if the input frequency is greater than 40 Hz. The oscillation suppression is released at 30 Hz. The values for blocking/release of the oscillation can be changed in the local HMI and PCM600 under **Main menu/Settings/General settings/I/O-modules**.

The debounce time should be set to the same value for all channels on the board.

The setting is common for all input channels on a Binary Input Module, that is, if changes of the limits are made for inputs not connected to the pulse counter, the setting also influences the inputs on the same board used for pulse counting.

18.2 Function for energy calculation and demand handling ETPMMTR

18.2.1 Identification

Function description	IEC 61850 identification	IEC 60617 identification	ANSI/IEEE C37.2 device number
Function for energy calculation and demand handling	ETPMMTR	W_Varh	-

18.2.2 Application

Energy calculation and demand handling function (ETPMMTR) is intended for statistics of the forward and reverse active and reactive energy. It has a high accuracy basically given by the measurements function (CVMMXN). This function has a site calibration possibility to further increase the total accuracy.

The function is connected to the instantaneous outputs of (CVMMXN) as shown in figure 403.

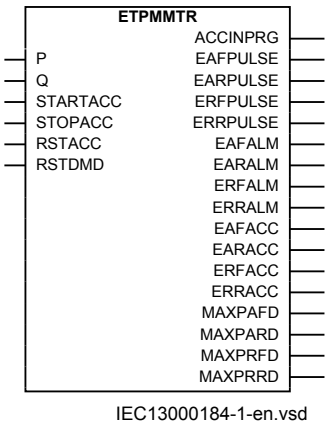

Figure 403: Connection of energy calculation and demand handling function ETPMMTR to the measurements function (CVMMXN)

The energy values can be read through communication in MWh and MVArh in monitoring tool of PCM600 and/or alternatively the values can be presented on the local HMI. The local HMI graphical display is configured with PCM600 Graphical Display Editor tool (GDE) with a measuring value which is selected to the active and reactive component as preferred. Also all Accumulated Active Forward, Active Reverse, Reactive Forward and Reactive Reverse energy values can be presented.

Maximum demand values are presented in MWh or MVArh in the same way.

Alternatively, the energy values can be presented with use of the pulse counters function (PCGGIO). The output energy values are scaled with the pulse output setting values *EAFAccPlsQty*, *EARAccPlsQty*, *ERFAccPlsQty* and *ERVAccPlsQty* of the energy metering function and then the pulse counter can be set-up to present the correct values by scaling in this function. Pulse counter values can then be presented on the local HMI in the same way and/or sent to the SA (Substation Automation) system through communication where the total energy then is calculated by summation of the energy pulses. This principle is good for very high values of energy as the saturation of numbers else will limit energy integration to about one year with 50 kV and 3000 A. After that the accumulation will start on zero again.

18.2.3 Setting guidelines

The parameters are set via the local HMI or PCM600.

The following settings can be done for the energy calculation and demand handling function ETPMMTR:

GlobalBaseSel: Selects the global base value group used by the function to define (*IBase*), (*VBase*) and (*SBase*).

Operation: *Disabled*/*Enabled*

EnaAcc: *Disabled*/*Enabled* is used to switch the accumulation of energy on and off.

tEnergy: Time interval when energy is measured.

tEnergyOnPls: gives the pulse length ON time of the pulse. It should be at least *100* ms when connected to the Pulse counter function block. Typical value can be *100* ms.

tEnergyOffPls: gives the OFF time between pulses. Typical value can be *100* ms.

EAFAccPlsQty and *EARAccPlsQty*: gives the MWh value in each pulse. It should be selected together with the setting of the Pulse counter (PCGGIO) settings to give the correct total pulse value.

ERFAccPlsQty and *ERVAccPlsQty* : gives the MVArh value in each pulse. It should be selected together with the setting of the Pulse counter (PCGGIO) settings to give the correct total pulse value.

For the advanced user there are a number of settings for direction, zero clamping, max limit, and so on. Normally, the default values are suitable for these parameters.

Section 19 Station communication

19.1 670 series protocols

Each IED is provided with a communication interface, enabling it to connect to one or many substation level systems or equipment, either on the Substation Automation (SA) bus or Substation Monitoring (SM) bus.

Following communication protocols are available:

- IEC 61850-8-1 communication protocol
- IEC 61850-9-2LE communication protocol
- LON communication protocol
- SPA or IEC 60870-5-103 communication protocol
- DNP3.0 communication protocol

Theoretically, several protocols can be combined in the same IED.

19.2 IEC 61850-8-1 communication protocol

19.2.1 Application IEC 61850-8-1

IEC 61850-8-1 communication protocol allows vertical communication to HSI clients and allows horizontal communication between two or more intelligent electronic devices (IEDs) from one or several vendors to exchange information and to use it in the performance of their functions and for correct co-operation.

GOOSE (Generic Object Oriented Substation Event), which is a part of IEC 61850–8–1 standard, allows the IEDs to communicate state and control information amongst themselves, using a publish-subscribe mechanism. That is, upon detecting an event, the IED(s) use a multi-cast transmission to notify those devices that have registered to receive the data. An IED can, by publishing a GOOSE message, report its status. It can also request a control action to be directed at any device in the network.

Figure 404 shows the topology of an IEC 61850–8–1 configuration. IEC 61850–8–1 specifies only the interface to the substation LAN. The LAN itself is left to the system integrator.

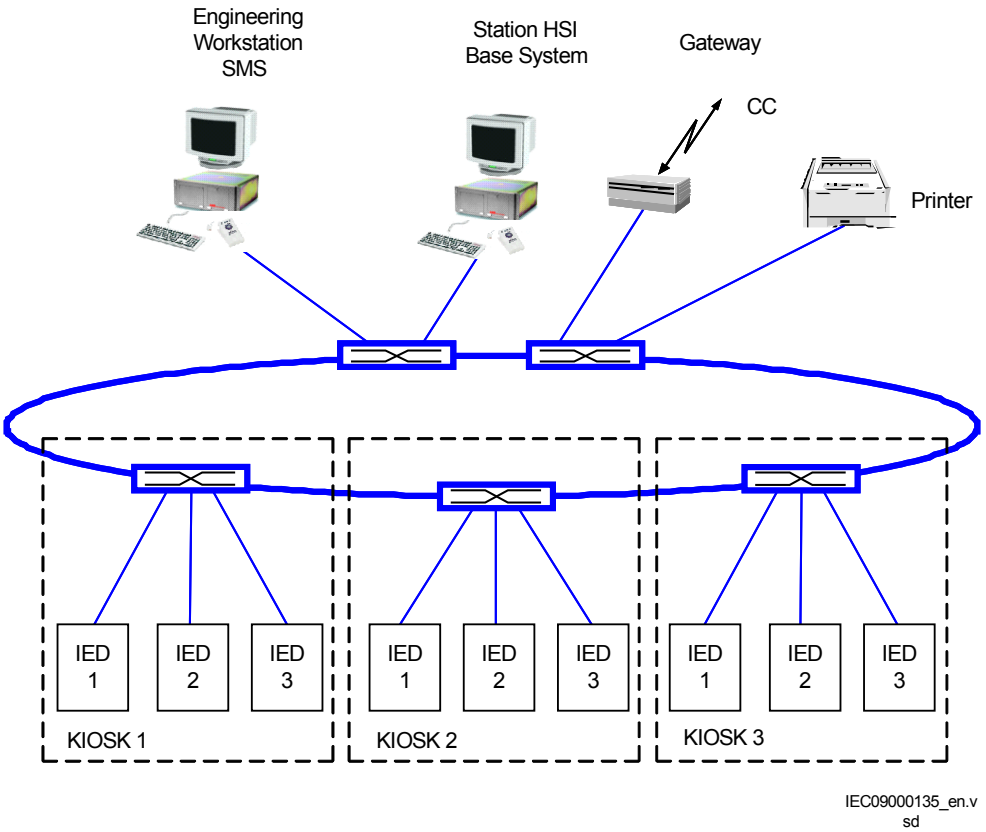

Figure 404: SA system with IEC 61850–8–1

Figure 405 shows the GOOSE peer-to-peer communication.

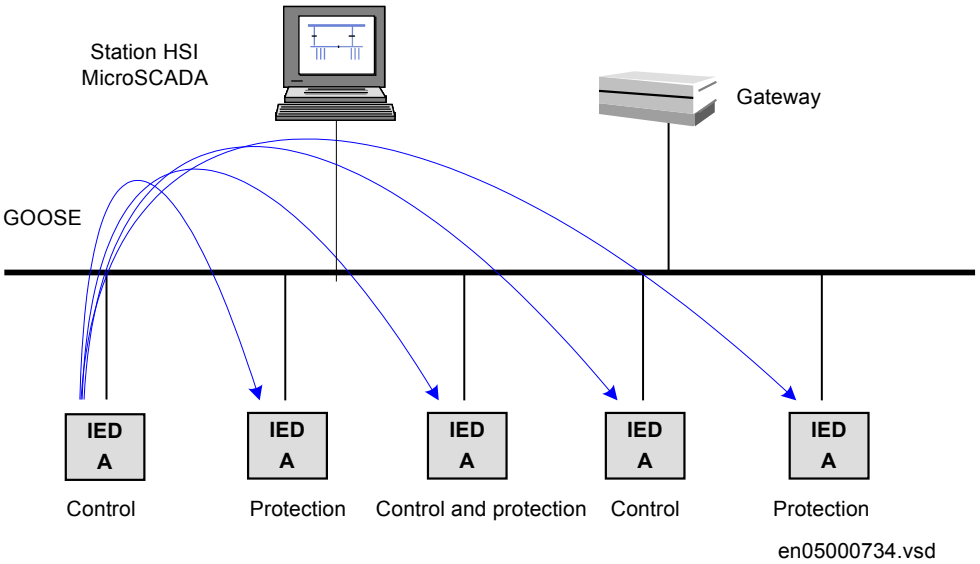

Figure 405: Example of a broadcasted GOOSE message

19.2.2 Horizontal communication via GOOSE for interlocking GOOSEINTLKRCV

Table 54: GOOSEINTLKRCV Non group settings (basic)

Name	Values (Range)	Unit	Step	Default	Description
Operation	Disabled Enabled	-	-	Disabled	Operation Disabled/Enabled

19.2.3 Setting guidelines

There are two settings related to the IEC 61850–8–1 protocol:

Operation User can set IEC 61850 communication to *Enabled* or *Disabled*.

GOOSE has to be set to the Ethernet link where GOOSE traffic shall be send and received.

19.2.4 Generic communication function for Single Point indication SPGAPC, SP16GAPC

19.2.4.1 Application

Generic communication function for Measured Value (SPGAPC) function is used to send one single logical output to other systems or equipment in the substation. It has one visible input, that should be connected in ACT tool.

19.2.4.2 Setting guidelines

There are no settings available for the user for SPGAPC. However, PCM600 must be used to get the signals sent by SPGAPC.

19.2.5 Generic communication function for Measured Value MVGAPC

19.2.5.1 Application

Generic communication function for Measured Value MVGAPC function is used to send the instantaneous value of an analog signal to other systems or equipment in the substation. It can also be used inside the same IED, to attach a RANGE aspect to an analog value and to permit measurement supervision on that value.

19.2.5.2 Setting guidelines

The settings available for Generic communication function for Measured Value (MVGAPC) function allows the user to choose a deadband and a zero deadband for the monitored signal. Values within the zero deadband are considered as zero.

The high and low limit settings provides limits for the high-high-, high, normal, low and low-low ranges of the measured value. The actual range of the measured value is shown on the range output of MVGAPC function block. When a Measured value expander block (RANGE_XP) is connected to the range output, the logical outputs of the RANGE_XP are changed accordingly.

19.2.6 IEC 61850-8-1 redundant station bus communication

19.2.6.1 Identification

Function description	LHMI identification	IEC 61850 identification	IEC 60617 identification	ANSI/IEEE C37.2 device number
Parallel Redundancy Protocol Status	PRPSTATUS	RCHLCCH	-	-
Duo driver configuration	PRP	-	-	-

19.2.6.2 Application

Parallel redundancy protocol status (PRPSTATUS) together with Duo driver configuration (DUODRV) are used to supervise and assure redundant Ethernet communication over two channels. This will secure data transfer even though one communication channel might not be available for some reason. Together PRPSTATUS and DUODRV provide redundant communication over station bus running IEC 61850-8-1 protocol. The redundant communication use both port AB and CD on OEM module.

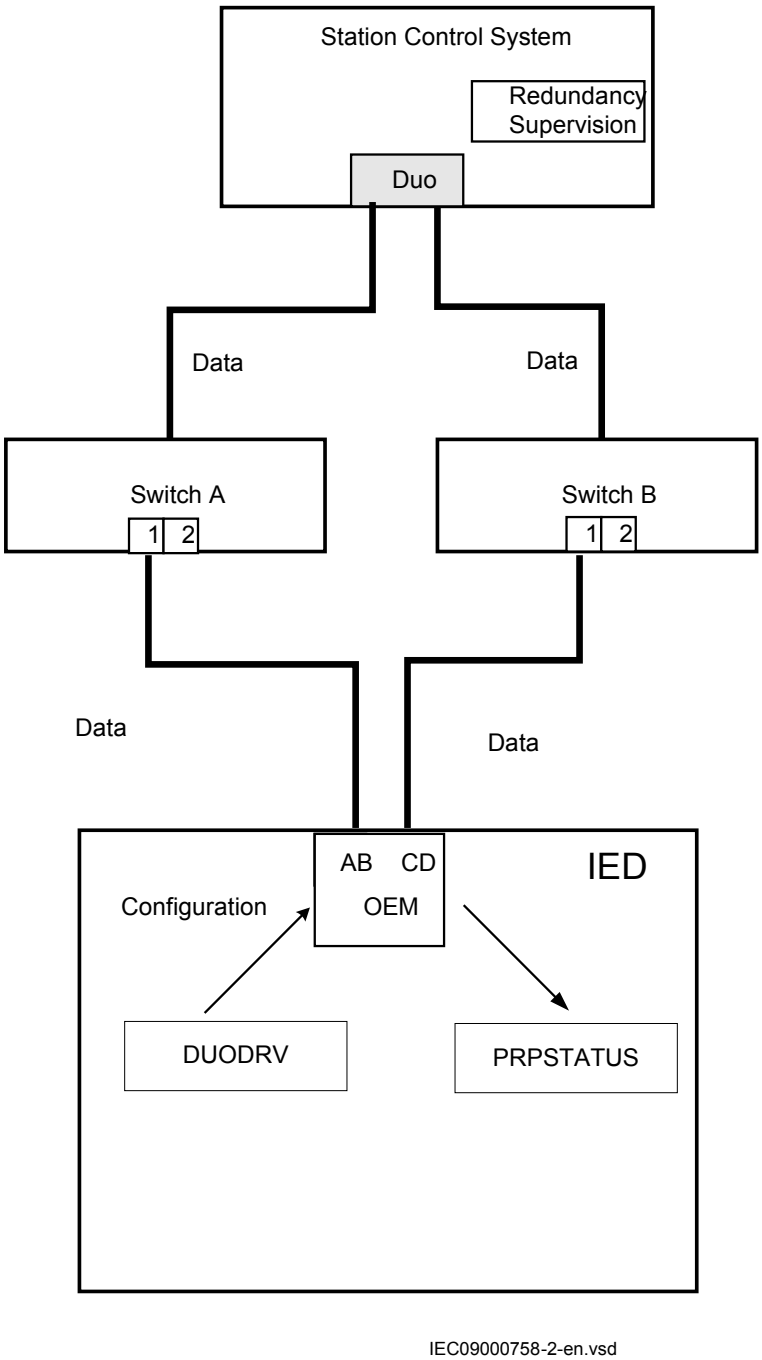

Figure 406: Redundant station bus

19.2.6.3 Setting guidelines

Redundant communication (DUODRV) is configured in the local HMI under **Main menu/Settings/General settings/Communication/Ethernet configuration/Rear OEM - Redundant PRP**

The settings can then be viewed, but not set, in the Parameter Setting tool in PCM600 under **Main menu/IED Configuration/Communication/Ethernet configuration/ DUODRV**:

Operation: The redundant communication will be activated when this parameter is set to *On.*After confirmation the IED will restart and the setting alternatives *Rear OEM - Port AB* and *CD* will not be further displayed in the local HMI. The *ETHLANAB* and *ETHLANCD* in the Parameter Setting Tool are irrelevant when the redundant communication is activated, only DUODRV IPAdress and IPMask are valid.

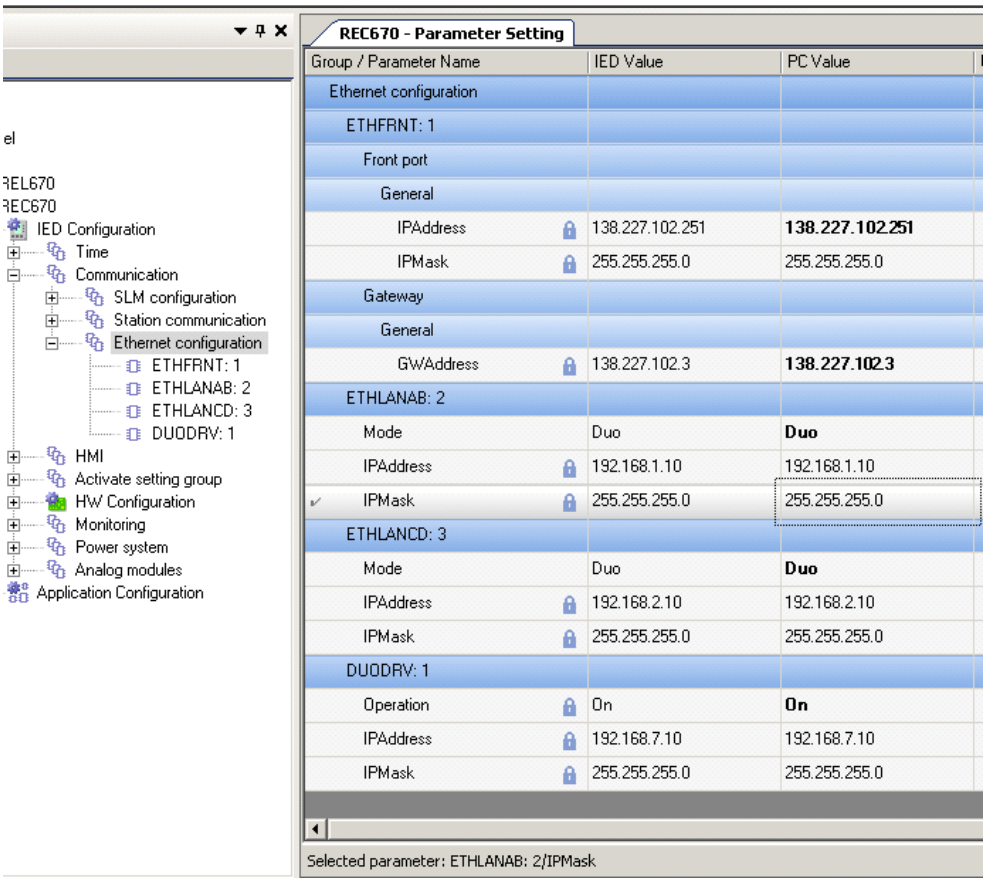

Figure 407: PST screen: DUODRV Operation is set to On, which affect Rear OEM - Port AB and CD which are both set to Duo

19.3 IEC 61850-9-2LE communication protocol

19.3.1 Introduction

Every IED can be provided with a communication interface enabling it to connect to a process bus, in order to get data from analog data acquisition units close to the process (primary apparatus), commonly known as Merging Units (MU). The protocol used in this case is the IEC 61850-9-2LE communication protocol.

Note that the IEC 61850-9-2LE standard does not specify the quality of the sampled values, only the transportation. Thus, the accuracy of the current and voltage inputs to

the merging unit and the inaccuracy added by the merging unit must be coordinated with the requirement for actual type of protection function.

Factors influencing the accuracy of the sampled values from the merging unit are for example anti aliasing filters, frequency range, step response, truncating, A/D conversion inaccuracy, time tagging accuracy etc.

In principle shall the accuracy of the current and voltage transformers, together with the merging unit, have the same quality as direct input of currents and voltages.

The process bus physical layout can be arranged in several ways, described in Annex B of the standard, depending on what are the needs for sampled data in a substation.

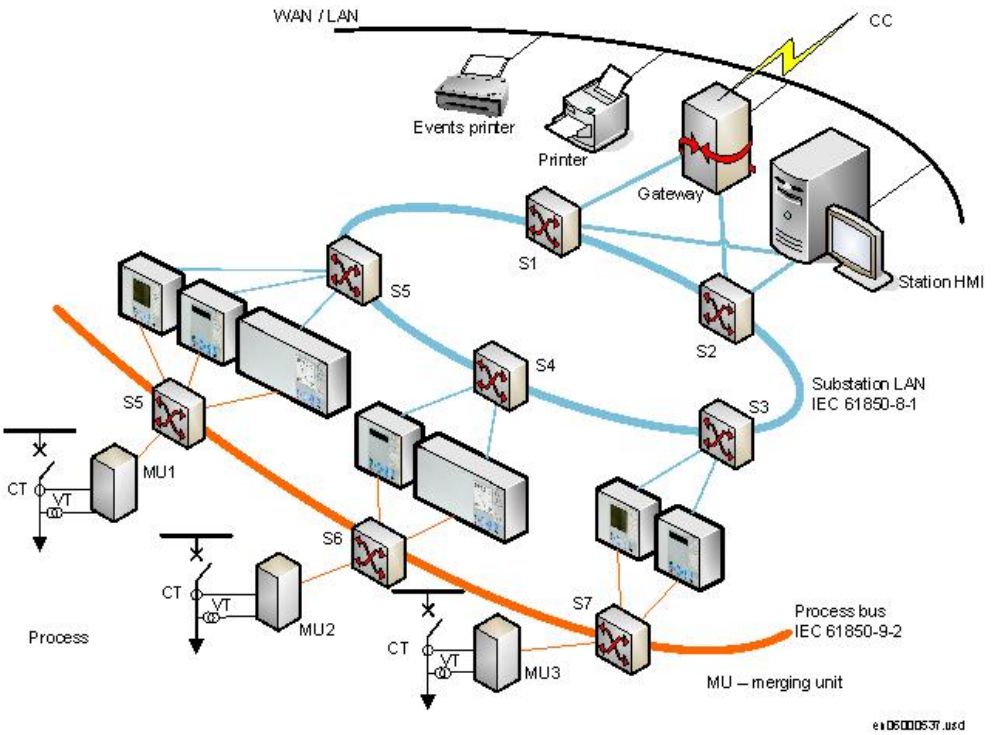

Figure 408: Example of a station configuration with separated process bus and station bus

The IED can get analog values simultaneously from a classical CT or VT and from a Merging Unit, like in this example:

The merging units (MU) are called so because they can gather analog values from one or more measuring transformers, sample the data and send the data over process bus to other clients (or subscribers) in the system. Some merging units are able to get data from classical measuring transformers, others from non-conventional measuring transducers and yet others can pick up data from both types. The electronic part of a non-

conventional measuring transducer (like a Rogowski coil or a capacitive divider) can represent a MU by itself as long as it can send sampled data over process bus.

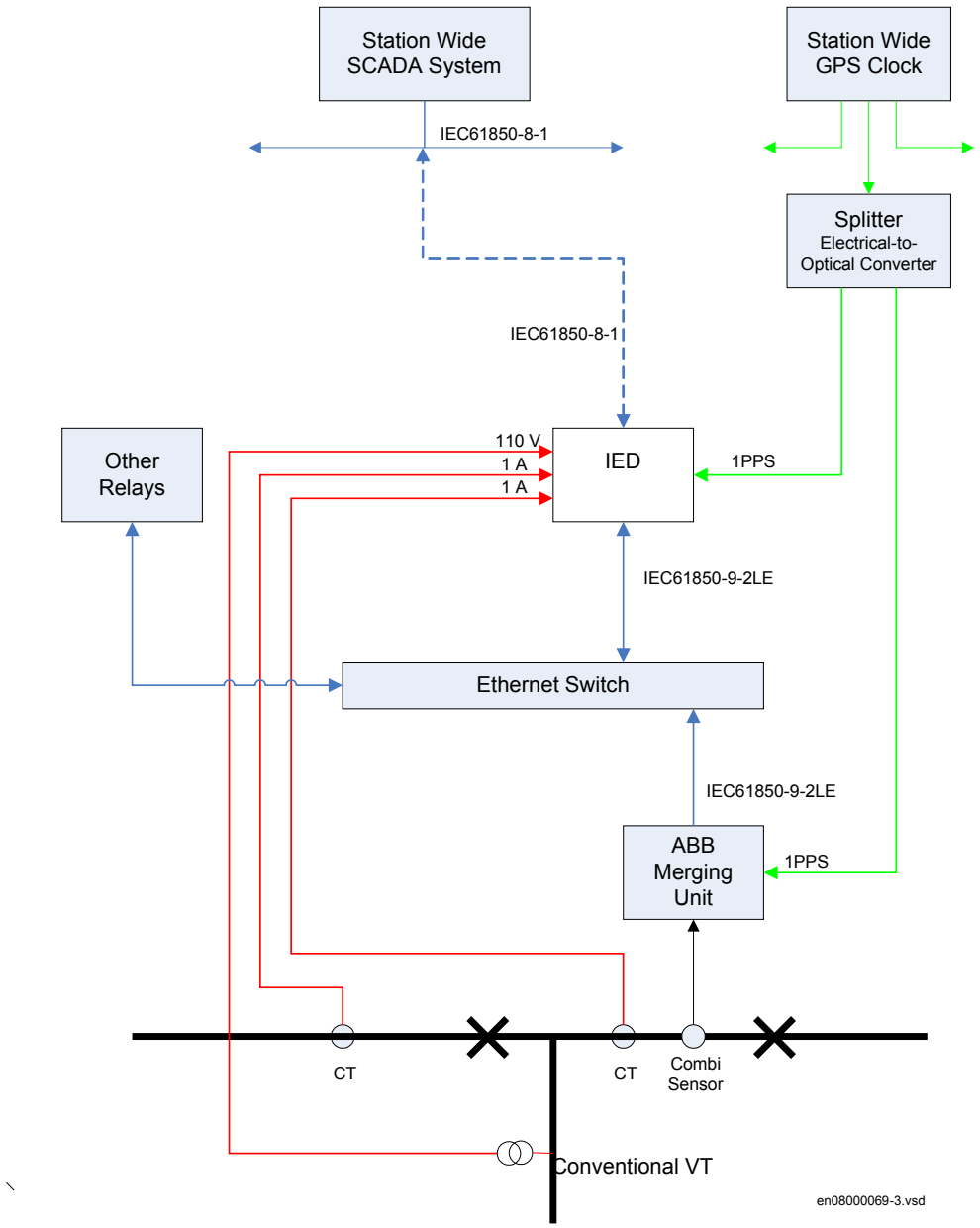

Figure 409: Example of a station configuration with the IED receiving analog values from both classical measuring transformers and merging units.

Figure 410: Example of a station configuration with the IED receiving analogue values from merging units

19.3.2 Setting guidelines

There are several settings related to the Merging Units in local HMI under:

Main menu\Settings\General Settings\Analog Modules\Merging Unit x

where x can take the value 1, 2, 3, 4, 5 or 6.

19.3.2.1 Specific settings related to the IEC 61850-9-2LE communication

The process bus communication IEC 61850-9-2LE have specific settings, similar to the analog inputs modules.

Besides the names of the merging unit channels (that can be edited only from PCM600, **not** from the local HMI) there are important settings related to the merging units and time synchronization of the signals:

When changing the sending (MU unit) MAC address, a reboot of the IED is required.

If there are more than one sample group involved, then time synch is mandatory and the protection functions will be blocked if there is no time synchronization.

SmpGrp – this setting parameter is not used

CTStarPointx: This parameter specifies the direction to or from object. See also section "Setting of current channels".

AppSynch: If this parameter is set to *Synch* and the IED HW-time synchronization is lost or the synchronization to the MU time is lost, the protection functions in the list 55 will be blocked and the output SYNCH will be set.

SynchMode: marks how the IED will receive the data coming from a merging unit:

- if it is set to *NoSynch*, then when the sampled values arrive, there will be no check on the “SmpSynch” flag
- If it is set to *Operation*, the “SmpSynch” flag will be checked all time.
- setting *Init*, should not be used

The rest of the setting are explained in table "".

19.3.2.2 Loss of communication

If IEC 61850-9-2LE communication is lost, see examples in figures 411, 412 and 413, the protection functions in table 55are blocked.

Case 1:

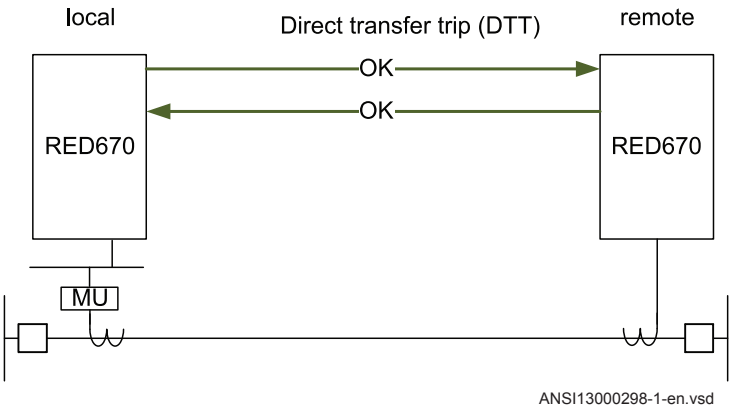

Figure 411: Normal operation

Case 2:

Failure of the MU (sample lost) blocks the sending of binary signals through LDCM. The received binary signals are not blocked and processd normally.

→DTT from the remote end is still processed.

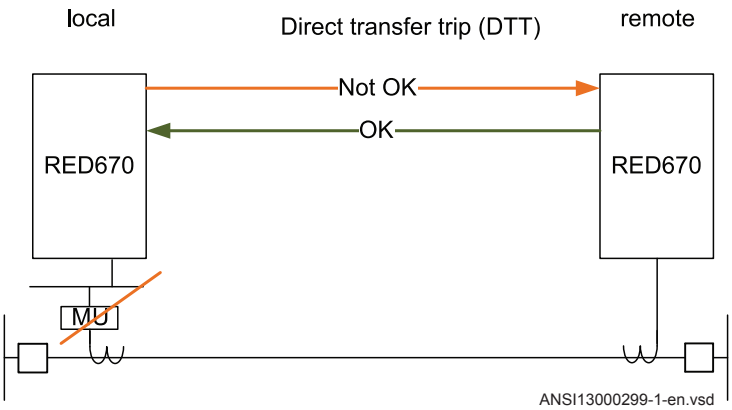

Figure 412: MU failed, mixed system

Case 3:

Failure of one MU (sample lost) blocks the sending and receiving of binary signals through LDCM.

→DTT from the remote end is not working.

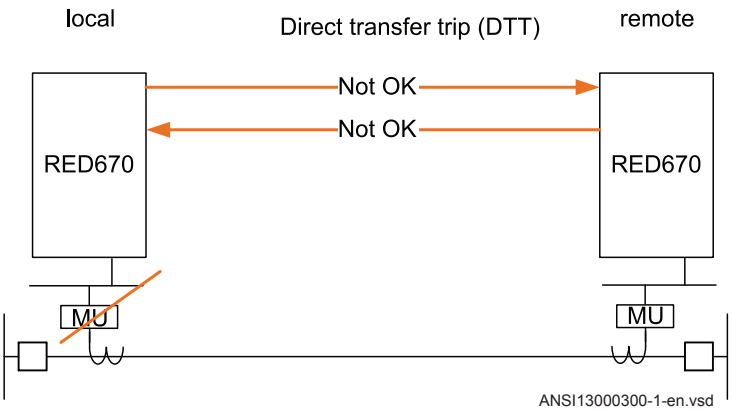

Figure 413: MU failed, 9-2 system

Table 55: Blocked protection functions if IEC 61850-9-2LE communication is interrupted.

Function description	IEC 61850 identification	Function description	IEC 61850 identification
Accidental energizing protection for synchronous generator	AEGPVOC	Two step overvoltage protection	OV2PTOV
Broken conductor check	BRCPTOC	Four step single phase overcurrent protection	PH4SPTOC
Capacitor bank protection	CBPGAPC	Radial feeder protection	PAPGAPC
Pole discordance protection	CCPDSC	Instantaneous phase overcurrent protection	PHPIOC
Breaker failure protection	CCRBRF	PoleSlip/Out-of-step protection	PSPPPAM
Breaker failure protection, single phase version	CCSRBRF	Restricted earth fault protection, low impedance	REFPDIF
Current circuit supervison	CCSSPVC	Two step residual overvoltage protection	ROV2PTOV
Compensated over- and undervoltage protection	COUVGAPC	Rate-of-change frequency protection	SAPFRC
General currrent and voltage protection	CVGAPC	Overfrequency protection	SAPTOF
Current reversal and weakend infeed logic for residual overcurrent protection	ECRWPSCH	Underfrequency protection	SAPTUF
Four step residual overcurrent protection	EF4PTOC	Sudden change in current variation	SCCVPTOC
Table continues on next page			

Function description	IEC 61850 identification	Function description	IEC 61850 identification
Instantaneous residual overcurrent protection	EFPIOC	Sensitive Directional residual over current and power protetcion	SDEPSDE
Phase selection, quadrilateral characteristic with fixed angle	FDPSPDIS	Synchrocheck, energizing check, and synchronizing	SESRSYN
Faulty phase identification with load enchroachment	FMPSPDIS	Circuit breaker condition monitoring	SSCBR
Phase selection, quadrilateral characteristic with settable angle	FRPSPDIS	Insulation gas monitoring	SSIMG
Frequency time accumulation protection	FTAQFVR	Insulation liquid monitoring	SSIML
Fuse failure supervision	FUFSPVC	Stub protection	STBPTOC
Generator differential protection	GENPDIF	Transformer differential protection, two winding	T2WPDIF
Directional Overpower protection	GOPPDOP	Transformer differential protection, three winding	T3WPDIF
Generator rotor overload protection	GRPTTR	Automatic voltage control for tapchanger, single control	TR1ATCC
Generator stator overload protection	GSPTTR	Automatic voltage control for tapchanger, parallel control	TR8ATCC
Directional Underpower protection	GUPPDUP	Thermal overload protection, two time constants	TRPTTR
1Ph High impedance differential protection	HZPDIF	Two step undervoltage protection	UV2PTUV
Line differential protection, 3 CT sets, 2-3 line ends	L3CPDIF	Voltage differential protection	VDCPTOV
Line differential protection, 6 CT sets, 3-5 line ends	L6CPDIF	Fuse failure supervision	VDRFUF
Low active power and power factor protection	LAPPGAPC	Voltage-restrained time overcurrent protection	VRPVOC
Negative sequence overcurrent protection	LCNSPTOC	Local acceleration logic	ZCLCPSCH
Negative sequence overvoltage protection	LCNSPTOV	Scheme communication logic for distance or overcurrent protection	ZCPSCH
Three phase overcurrent	LCP3PTOC	Current reversal and weak-end infeed logic for distance protection	ZCRWPSCH

Table continues on next page

Function description	IEC 61850 identification	Function description	IEC 61850 identification
Three phase undercurrent	LCP3PTUC	Automatic switch onto fault logic, voltage and current based	ZCVPSOF
Thermal overload protection, one time constant	LCPTTR	Under impedance protection for generator	ZGVPDIS
Zero sequence overcurrent protection	LCZSPTOC	Fast distance protection	ZMFCPDIS
Zero sequence overvoltage protection	LCZSPTOV	High speed distance protection	ZMFPDIS
Line differential coordination	LDLPSCH	Distance measuring zone, quadrilateral characteristic for series compensated lines	ZMCAPDIS
Additional security logic for differential protection	LDRGFC	Distance measuring zone, quadrilateral characteristic for series compensated lines	ZMCPDIS
Loss of excitation	LEXPDIS	Fullscheme distance protection, mho characteristic	ZMHPDIS
Thermal overload protection, one time constant	LFPTTR	Fullscheme distance protection, quadrilateral for earth faults	ZMMAPDIS
Loss of voltage check	LOVPTUV	Fullscheme distance protection, quadrilateral for earth faults	ZMMPDIS
Line differential protection 3 CT sets, with inzone transformers, 2-3 line ends	LT3CPDIF	Distance protection zone, quadrilateral characteristic	ZMQAPDIS
Line differential protection 6 CT sets, with inzone transformers, 3-5 line ends	LT6CPDIF	Distance protection zone, quadrilateral characteristic	ZMQPDIS
Negativ sequence time overcurrent protection for machines	NS2PTOC	Distance protection zone, quadrilateral characteristic, separate settings	ZMRAPDIS
Four step directional negative phase sequence overcurrent protection	NS4PTOC	Distance protection zone, quadrilateral characteristic, separate settings	ZMRPDIS

Table continues on next page

Function description	IEC 61850 identification	Function description	IEC 61850 identification
Four step phase overcurrent protection	OC4PTOC	Power swing detection	ZMRPSB
Overexcitation protection	OEXPVPH	Mho Impedance supervision logic	ZSMGAPC
Out-of-step protection	OOSPPAM		

19.3.2.3 Setting examples for IEC 61850-9-2LE and time synchronization

It is important that the IED and the merging units (MU) uses the same time reference. This is especially true if analog data is used from several sources, for example an internal TRM and a MU. Or if several physical MU is used. The same time reference is important to correlate data so that channels from different sources refer to correct phase angel.

When only one MU is used as analog source it is theoretically possible to do without time- synchronization. However, this would mean that timestamps for analog and binary data/events would be uncorrelated. Disturbance recordings will appear incorrect since analog data will be timestamped by MU and binary events will use internal IED time. For this reason it is recommended to use time synchronization also when analog data emanate from only one MU.

An external time-source can be used to synchronize both the IED and the MU. It is also possible to use the MU as clock-master to synchronize the IED from the MU. When using an external clock, it is possible to set the IED to be synchronized via PPS or IRIG-B. It is also possible to use an internal GPS-receiver in the IED (if the external clock is using GPS).

Using the MU as time source for synchronization

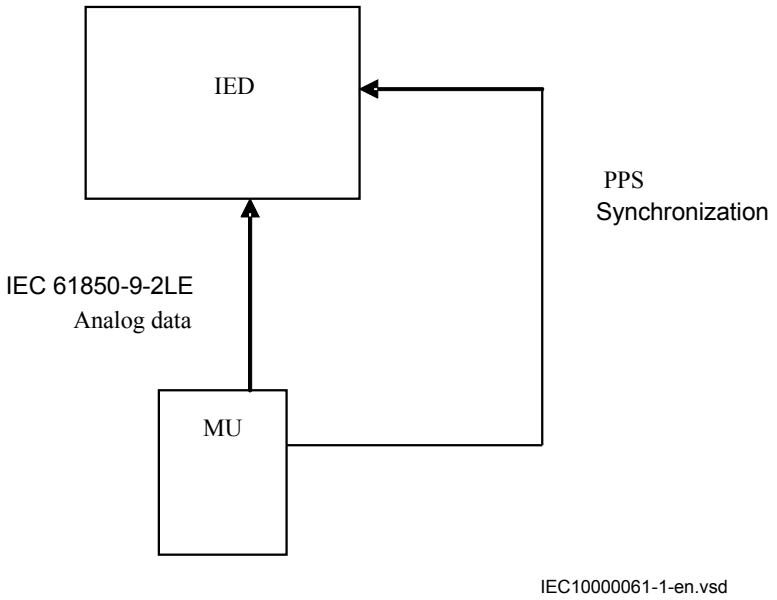

Figure 414: Setting example when MU is the synchronizing source

Settings in local HMI under **Settings/Time/Synchronization/TIMESYNCHGEN/ IEC 61850-9-2:**

- *HwSyncSrc*: set to *PPS* since this is what is generated by the MU (ABB MU)
- *AppSynch* : set to *Synch*, since protection functions should be blocked in case of loss of timesynchronization
- *SyncAccLevel*: could be set to 4us since this corresponds to a maximum phase-angle error of 0.072 degrees at 50Hz
- *fineSyncSource* could still be set to something different in order to correlate events and data to other IED's in the station

Settings in PST in PCM600 under: **Hardware/Analog modules/Merging units/MU01**

- *SyncMode* : set to Operation. This means that the IED will be blocked if the MU loose time synchronization. Since the MU is set as Time-master, this is unlikely to happen so the setting of *SyncMode* is not important in this case

There are 3 signals that monitors state related to time synchronization:

- TSYNCERR signal on the TIMEERR function block. This signal will go high whenever internal *timeQuality* goes above the setting *SyncAccLevel* (*4us* in this

case) and this will block the protection functions.. This will happen max 4 seconds after an interruption of the PPS fiber from the MU (or if the *fineSyncSource* is lost).
- SYNCH signal on the MU1_4I_4U function block indicates when protection functions are blocked due to loss of internal time synchronization to the IED (that is loss of the hardware *synchSrc*)
- MUSYNCH signal on the MU_4I_4U function block monitor the synchronization from the MU (in the datastream). When the MU indicates loss of time synchronization this signal will go high. In this case the MU is set to master so it can not loose time synchronization.

The SMPLLOSTsignal will of course also be interesting since this indicate blocking due to missing analog data (interruption of IEC 61850-9-2LE fiber), although this has nothing to do with time synchronization.

Using an external clock for time synchronization

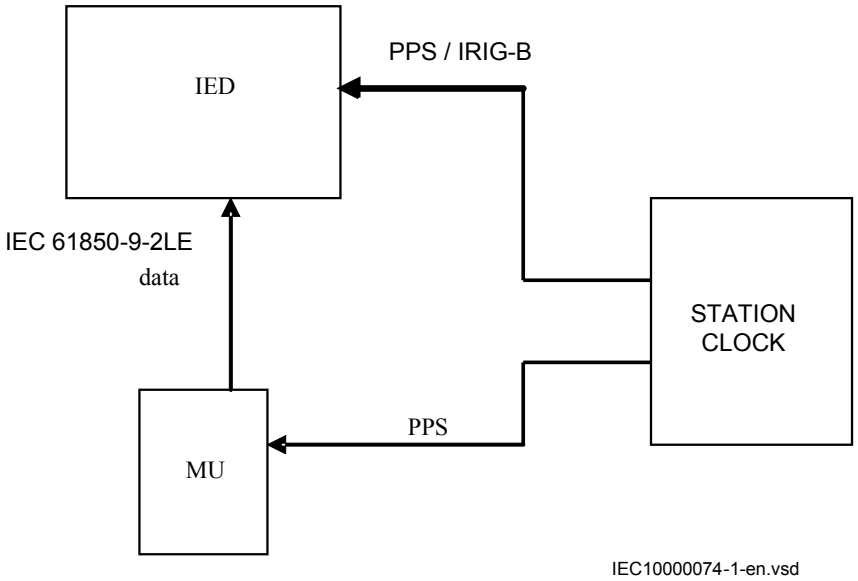

Figure 415: Setting example with external synchronization

Settings in local HMI under **Settings/Time/Synchronization/TIMESYNCHGEN/ IEC 61850-9-2:**

- *HwSyncSrc* : set to *PPS/IRIG-B* depending on available outputs on the clock
- *AppSynch* : set to *Synch*, for blocking protection functions in case of loss of time synchronization
- *SyncAccLevel* : could be set to 4us since this correspond to a maximum phase-angle error of 0.072 degrees at 50Hz
- *fineSyncSource* :should be set to *IRIG-B* if this is available from the clock. If using *PPS* for *HWSyncSrc* , “full-time” has to be acquired from another source. If the

station clock is on the local area network (LAN) and has a sntp-server this is one option.

Settings in PST in PCM600 under: **Hardware/Analog modules/Merging units/MU01**

- *SyncMode*: set to *Operation*. This means that the IED will block if the MU loose time synchronization.

There are 3 signals that monitors state related to time synchronization:

- TSYNCERR signal on the TIMEERR function block will go high whenever internal *timeQuality* goes above the setting *SyncAccLevel* (*4us* in this case). This will block the protection functions after maximum 4 seconds after an interruption in the PPS fiber communication from the MU.
- SYNCH signal on the MU_4I_4U function block indicate that protection functions are blocked by loss of internal time synchronization to the IED (that is loss of the *HW-synchSrc*).
- MUSYNCH signal on the MU_4I_4U function block monitors the synchronization flag from the MU (in the datastream). When the MU indicates loss of time synchronization, this signal is set.

A “blockedByTimeSynch” signal could be made by connecting the MUSYNCH and the SYNCH through an OR gate. If also the SMPLLOST signal is connected to the same OR gate, it will be more of a “BlockedByProblemsWith9-2” signal.

No synchronization

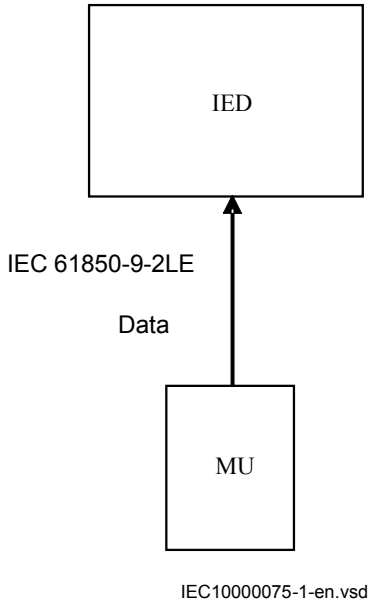

Figure 416: Setting example without time synchronization

It is possible to use IEC 61850-9-2LE communication without time synchronization. Settings in this case under **Settings/Time/Synchronization/TIMESYNCHGEN/IEC 61850-9-2** are:

- *HwSyncSrc*: set to *Off*
- *AppSynch*: set to *NoSynch*. This means that protection functions will not be blocked
- *SyncAccLevel* : set to *unspecified*

Settings in PST in PCM600 under: **Hardware/Analog modules/Merging units/MU01**

- *SyncMode*: set to *NoSynch*. This means that the IED do not care if the MU indicates loss of time synchronization.
- TSYNCERR signal will not be set since there is no configured time synchronization source
- SYNCH signal on the MU_4I_4U function block indicates when protection functions are blocked due to loss of internal time synchronization to the IED. Since *AppSynch* is set to *NoSynch* this signal will not be set.
- MUSYNCH signal on the MU_4I_4U function block will be set if the datastream indicates time synchronization is lost. However, protection functions will not be blocked.

To get higher availability in the protection functions, it is possible to avoid blocking if time synchronization is lost when there is a single source of analog data. This means that if there is only one physical MU and no TRM, parameter *AppSynch* can be set to

NoSynch but parameter *HwSyncSrc* can still be set to *PPS*. This will keep analog and binary data correlated in disturbance recordings while not blocking the protection functions if PPS is lost.

19.4 LON communication protocol

19.4.1 Application

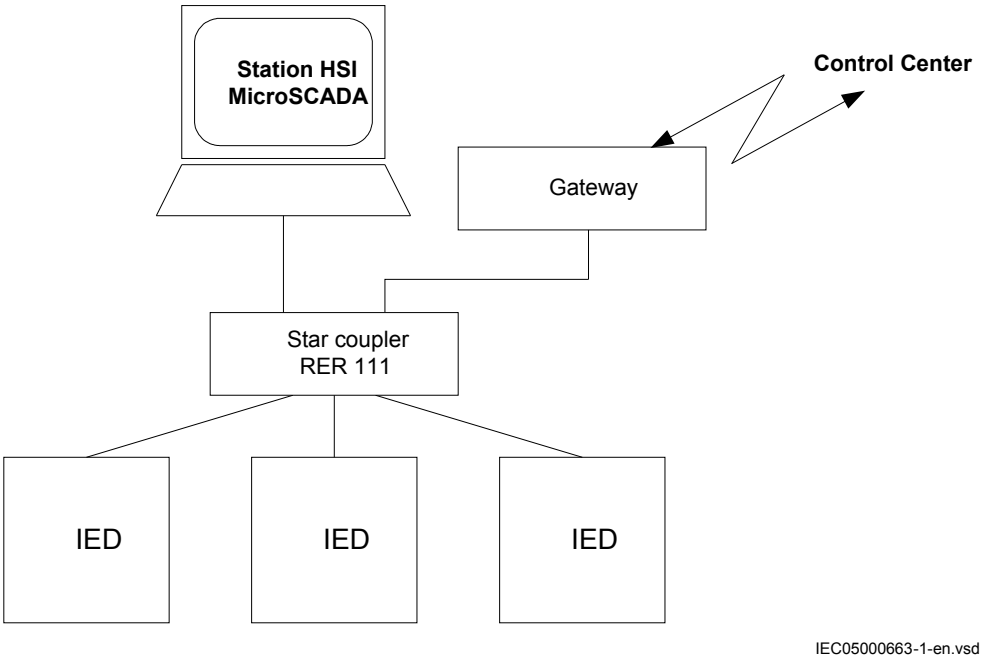

Figure 417: Example of LON communication structure for a substation automation system

An optical network can be used within the substation automation system. This enables communication with the IEDs in the 670 series through the LON bus from the operator's workplace, from the control center and also from other IEDs via bay-to-bay horizontal communication.

The fibre optic LON bus is implemented using either glass core or plastic core fibre optic cables.

Table 56: Specification of the fibre optic connectors

	Glass fibre	Plastic fibre
Cable connector	ST-connector	snap-in connector
Cable diameter	62.5/125 m	1 mm
Max. cable length	1000 m	10 m
Wavelength	820-900 nm	660 nm
Transmitted power	-13 dBm (HFBR-1414)	-13 dBm (HFBR-1521)
Receiver sensitivity	-24 dBm (HFBR-2412)	-20 dBm (HFBR-2521)

The LON Protocol

The LON protocol is specified in the LonTalkProtocol Specification Version 3 from Echelon Corporation. This protocol is designed for communication in control networks and is a peer-to-peer protocol where all the devices connected to the network can communicate with each other directly. For more information of the bay-to-bay communication, refer to the section Multiple command function.

Hardware and software modules

The hardware needed for applying LON communication depends on the application, but one very central unit needed is the LON Star Coupler and optical fibres connecting the star coupler to the IEDs. To interface the IEDs from MicroSCADA, the application library LIB670 is required.

The HV Control 670 software module is included in the LIB520 high-voltage process package, which is a part of the Application Software Library within MicroSCADA applications.

The HV Control 670 software module is used for control functions in IEDs in the 670 series. This module contains the process picture, dialogues and a tool to generate the process database for the control application in MicroSCADA.

Use the LON Network Tool (LNT) to set the LON communication. This is a software tool applied as one node on the LON bus. To communicate via LON, the IEDs need to know

- The node addresses of the other connected IEDs.
- The network variable selectors to be used.

This is organized by LNT.

The node address is transferred to LNT via the local HMI by setting the parameter *ServicePinMsg* = *Yes*. The node address is sent to LNT via the LON bus, or LNT can scan the network for new nodes.

The communication speed of the LON bus is set to the default of 1.25 Mbit/s. This can be changed by LNT.

19.5 SPA communication protocol

19.5.1 Application

SPA communication protocol as an alternative to IEC 60870-5-103. The same communication port as for IEC 60870-5-103 is used.

When communicating with a PC connected to the utility substation LAN, via WAN and the utility office LAN, as shown in figure 418, and using the rear Ethernet port on the optical Ethernet module (OEM), the only hardware required for a station monitoring system is:

- Optical fibres from the IED to the utility substation LAN.
- PC connected to the utility office LAN.

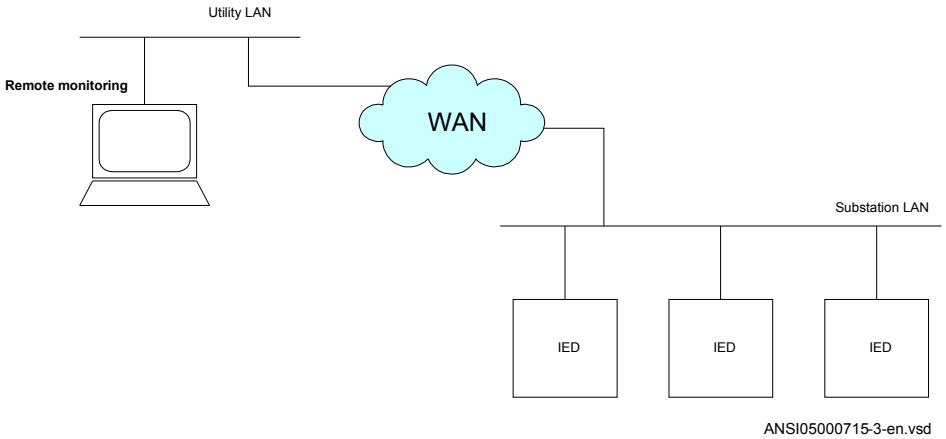

Figure 418: SPA communication structure for a remote monitoring system via a substation LAN, WAN and utility LAN

The SPA communication is mainly used for the Station Monitoring System. It can include different IEDs with remote communication possibilities. Connection to a computer (PC) can be made directly (if the PC is located in the substation) or by telephone modem through a telephone network with ITU (former CCITT) characteristics or via a LAN/WAN connection.

glass	<1000 m according to optical budget
plastic	<20 m (inside cubicle) according to optical budget

Functionality

The SPA protocol V2.5 is an ASCII-based protocol for serial communication. The communication is based on a master-slave principle, where the IED is a slave and the PC is the master. Only one master can be applied on each fibre optic loop. A program is required in the master computer for interpretation of the SPA-bus codes and for translation of the data that should be sent to the IED.

For the specification of the SPA protocol V2.5, refer to SPA-bus Communication Protocol V2.5.

19.5.2 Setting guidelines

The setting parameters for the SPA communication are set via the local HMI.

SPA, IEC 60870-5-103 and DNP3 uses the same rear communication port. Set the parameter *Operation*, under **Main menu /Settings /General settings / Communication /SLM configuration /Rear optical SPA-IEC-DNP port /Protocol selection to the selected protocol**.

When the communication protocols have been selected, the IED is automatically restarted.

The most important settings in the IED for SPA communication are the slave number and baud rate (communication speed). These settings are absolutely essential for all communication contact to the IED.

These settings can only be done on the local HMI for rear channel communication and for front channel communication.

The slave number can be set to any value from 1 to 899, as long as the slave number is unique within the used SPA loop.

The baud rate, which is the communication speed, can be set to between 300 and 38400 baud. Refer to technical data to determine the rated communication speed for the selected communication interfaces. The baud rate should be the same for the whole station, although different baud rates in a loop are possible. If different baud rates in the same fibre optical loop or RS485 network are used, consider this when making the communication setup in the communication master, the PC.

For local fibre optic communication, 19200 or 38400 baud is the normal setting. If telephone communication is used, the communication speed depends on the quality of the connection and on the type of modem used. But remember that the IED does not adapt its speed to the actual communication conditions, because the speed is set on the local HMI.

19.6 IEC 60870-5-103 communication protocol

19.6.1 Application

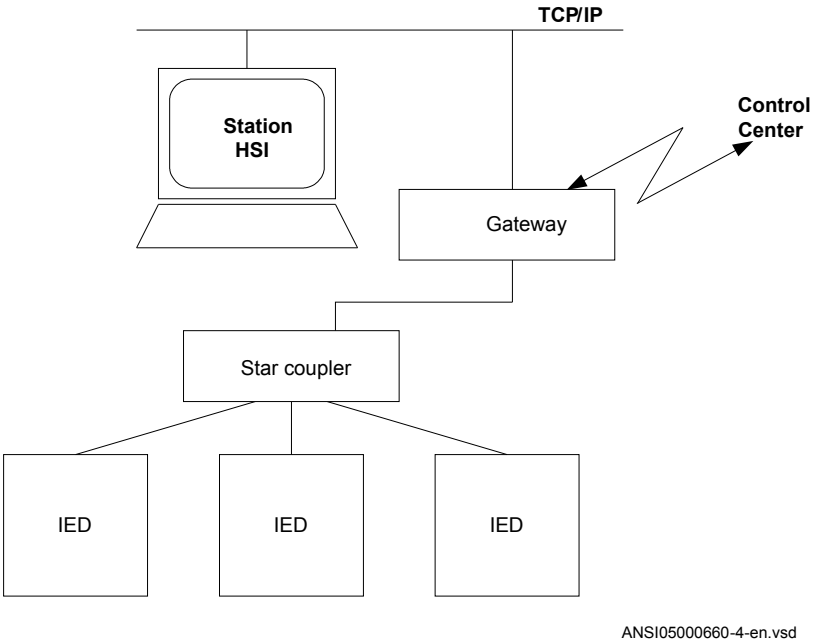

Figure 419: Example of IEC 60870-5-103 communication structure for a substation automation system

IEC 60870-5-103 communication protocol is mainly used when a protection IED communicates with a third party control or monitoring system. This system must have software that can interpret the IEC 60870-5-103 communication messages.

When communicating locally in the station using a Personal Computer (PC) or a Remote Terminal Unit (RTU) connected to the Communication and processing module, the only hardware needed is optical fibres and an opto/electrical converter for the PC/RTU, or a RS-485 connection depending on the used IED communication interface.

Functionality

IEC 60870-5-103 is an unbalanced (master-slave) protocol for coded-bit serial communication exchanging information with a control system. In IEC terminology a primary station is a master and a secondary station is a slave. The communication is based on a point-to-point principle. The master must have software that can interpret the IEC 60870-5-103 communication messages. For detailed information about IEC

60870-5-103, refer to IEC60870 standard part 5: Transmission protocols, and to the section 103, Companion standard for the informative interface of protection equipment.

Design

General

The protocol implementation consists of the following functions:

- Event handling
- Report of analog service values (measurands)
- Fault location
- Command handling
    - Autorecloser ON/OFF
    - Teleprotection ON/OFF
    - Protection ON/OFF
    - LED reset
    - Characteristics 1 - 4 (Setting groups)
- File transfer (disturbance files)
- Time synchronization

Hardware

When communicating locally with a Personal Computer (PC) or a Remote Terminal Unit (RTU) in the station, using the SPA/IEC port, the only hardware needed is:· Optical fibres, glass/plastic· Opto/electrical converter for the PC/RTU· PC/RTU

Commands

The commands defined in the IEC 60870-5-103 protocol are represented in a dedicated function blocks. These blocks have output signals for all available commands according to the protocol.

- IED commands in control direction

Function block with defined IED functions in control direction, I103IEDCMD. This block use PARAMETR as FUNCTION TYPE, and INFORMATION NUMBER parameter is defined for each output signal.

- Function commands in control direction

Function block with pre defined functions in control direction, I103CMD. This block includes the FUNCTION TYPE parameter, and the INFORMATION NUMBER parameter is defined for each output signal.

- Function commands in control direction

Function block with user defined functions in control direction, I103UserCMD. These function blocks include the FUNCTION TYPE parameter for each block in the private range, and the INFORMATION NUMBER parameter for each output signal.

Status

The events created in the IED available for the IEC 60870-5-103 protocol are based on the:

- IED status indication in monitor direction

Function block with defined IED functions in monitor direction, I103IED. This block use PARAMETER as FUNCTION TYPE, and INFORMATION NUMBER parameter is defined for each input signal.

- Function status indication in monitor direction, user-defined

Function blocks with user defined input signals in monitor direction, I103UserDef. These function blocks include the FUNCTION TYPE parameter for each block in the private range, and the INFORMATION NUMBER parameter for each input signal.

- Supervision indications in monitor direction

Function block with defined functions for supervision indications in monitor direction, I103Superv. This block includes the FUNCTION TYPE parameter, and the INFORMATION NUMBER parameter is defined for each output signal.

- Ground fault indications in monitor direction

Function block with defined functions for ground fault indications in monitor direction, I103EF. This block includes the FUNCTION TYPE parameter, and the INFORMATION NUMBER parameter is defined for each output signal.

- Fault indications in monitor direction, type 1

Function block with defined functions for fault indications in monitor direction, I103FltDis. This block includes the FUNCTION TYPE parameter, and the INFORMATION NUMBER parameter is defined for each input signal. This block is suitable for distance protection function.

- Fault indications in monitor direction, type 2

Function block with defined functions for fault indications in monitor direction, I103FltStd. This block includes the FUNCTION TYPE parameter, and the INFORMATION NUMBER parameter is defined for each input signal.

This block is suitable for line differential, transformer differential, over-current and ground-fault protection functions.

- Autorecloser indications in monitor direction

Function block with defined functions for autorecloser indications in monitor direction, I103AR. This block includes the FUNCTION TYPE parameter, and the INFORMATION NUMBER parameter is defined for each output signal.

Measurands

The measurands can be included as type 3.1, 3.2, 3.3, 3.4 and type 9 according to the standard.

- Measurands in public range

Function block that reports all valid measuring types depending on connected signals, I103Meas.

- Measurands in private range

Function blocks with user defined input measurands in monitor direction, I103MeasUsr. These function blocks include the FUNCTION TYPE parameter for each block in the private range, and the INFORMATION NUMBER parameter for each block.

Fault location

The fault location is expressed in reactive ohms. In relation to the line length in reactive ohms, it gives the distance to the fault in percent. The data is available and reported when the fault locator function is included in the IED.

Disturbance recordings

- The transfer functionality is based on the Disturbance recorder function. The analog and binary signals recorded will be reported to the master by polling. The eight last disturbances that are recorded are available for transfer to the master. A file that has been transferred and acknowledged by the master cannot be transferred again.
- The binary signals that are included in the disturbance recorder are those that are connected to the disturbance function blocks B1RBDR to B6RBDR. These function blocks include the function type and the information number for each signal. For more information on the description of the Disturbance report in the Technical reference manual. The analog channels, that are reported, are those connected to the disturbance function blocks A1RADR to A4RADR. The eight first ones belong to the public range and the remaining ones to the private range.

Settings

Settings for RS485 and optical serial communication

General settings

SPA, DNP and IEC 60870-5-103 can be configured to operate on the SLM optical serial port while DNP and IEC 60870-5-103 only can utilize the RS485 port. A single protocol can be active on a given physical port at any time.

Two different areas in the HMI are used to configure the IEC 60870-5-103 protocol.

1. The port specific IEC 60870-5-103 protocol parameters are configured under: **Main menu/Configuration/Communication/Station Communication/ IEC6870-5-103/**
   - <config-selector>
   - SlaveAddress
   - BaudRate
   - RevPolarity (optical channel only)
   - CycMeasRepTime
   - MasterTimeDomain
   - TimeSyncMode
   - EvalTimeAccuracy
   - EventRepMode
   - CmdMode

   <config-selector> is:
   - “OPTICAL103:1” for the optical serial channel on the SLM
   - “RS485103:1” for the RS485 port
2. The protocol to activate on a physical port is selected under: **Main menu/Configuration/Communication/Station Communication/Port configuration/**
   - RS485 port
     - RS485PROT:1 (off, DNP, IEC103)
   - SLM optical serial port
     - PROTOCOL:1 (off, DNP, IEC103, SPA)

Operation		Off			
SlaveAddress		1		1	254
BaudRate		9600 Bd			
RevPolarity		On			
CycMeasRepTime		5,0	s	1,0	1800,0
MasterTimeDomain		UTC			
TimeSyncMode		IEDTime			
EvalTimeAccuracy		5ms			
EventRepMode		SeqOfEvent			

Figure 420: Settings for IEC 60870-5-103 communication

The general settings for IEC 60870-5-103 communication are the following:

- *SlaveAddress* and *BaudRate*: Settings for slave number and communication speed (baud rate).
  The slave number can be set to any value between 1 and 254. The communication speed, can be set either to 9600 bits/s or 19200 bits/s.
- *RevPolarity*: Setting for inverting the light (or not). Standard IEC 60870-5-103 setting is *Enabled*.
- *CycMeasRepTime*: See I103MEAS function block for more information.
- *EventRepMode*: Defines the mode for how events are reported. The event buffer size is 1000 events.

Event reporting mode

If *SeqOfEvent* is selected, all GI and spontaneous events will be delivered in the order they were generated by BSW. The most recent value is the latest value delivered. All GI data from a single block will come from the same cycle.

If *HiPriSpont* is selected, spontaneous events will be delivered prior to GI event. To prevent old GI data from being delivered after a new spontaneous event, the pending GI event is modified to contain the same value as the spontaneous event. As a result, the GI dataset is not time-correlated.

The settings for communication parameters slave number and baud rate can be found on the local HMI under: **Main menu/Configuration/Communication /Station configuration /SPA/SPA:1** and then select a protocol.

Settings from PCM600

Event

For each input of the Event (EVENT) function there is a setting for the information number of the connected signal. The information number can be set to any value between 0 and 255. To get proper operation of the sequence of events the event masks in the event function is to be set to ON_CHANGE. For single-command signals, the event mask is to be set to ON_SET.

In addition there is a setting on each event block for function type. Refer to description of the Main Function type set on the local HMI.

Commands

As for the commands defined in the protocol there is a dedicated function block with eight output signals. Use PCM600 to configure these signals. To realize the BlockOfInformation command, which is operated from the local HMI, the output BLKINFO on the IEC command function block ICOM has to be connected to an input on an event function block. This input must have the information number 20 (monitor direction blocked) according to the standard.

Disturbance Recordings

For each input of the Disturbance recorder function there is a setting for the information number of the connected signal. The function type and the information number can be set to any value between 0 and 255. To get INF and FUN for the recorded binary signals there are parameters on the disturbance recorder for each input. The user must set these parameters to whatever he connects to the corresponding input.

Refer to description of Main Function type set on the local HMI.

Recorded analog channels are sent with ASDU26 and ASDU31. One information element in these ASDUs is called ACC and indicates the actual channel to be processed. The channels on disturbance recorder will be sent with an ACC according to the following table:

DRA#-Input	ACC	IEC103 meaning
1	1	IA
2	2	IB
3	3	IC
4	4	IG
5	5	VA
6	6	VB
7	7	VC
8	8	VG
9	64	Private range
10	65	Private range
11	66	Private range
12	67	Private range
13	68	Private range
14	69	Private range
15	70	Private range
16	71	Private range

Table continues on next page

DRA#-Input	ACC	IEC103 meaning
17	72	Private range
18	73	Private range
19	74	Private range
20	75	Private range
21	76	Private range
22	77	Private range
23	78	Private range
24	79	Private range
25	80	Private range
26	81	Private range
27	82	Private range
28	83	Private range
29	84	Private range
30	85	Private range
31	86	Private range
32	87	Private range
33	88	Private range
34	89	Private range
35	90	Private range
36	91	Private range
37	92	Private range
38	93	Private range
39	94	Private range
40	95	Private range

Function and information types

The function type is defined as follows:

128 = distance protection

160 = overcurrent protection

176 = transformer differential protection

192 = line differential protection

Refer to the tables in the Technical reference manual /Station communication, specifying the information types supported by the communication protocol IEC 60870-5-103.

To support the information, corresponding functions must be included in the protection IED.

There is no representation for the following parts:

- Generating events for test mode
- Cause of transmission: Info no 11, Local operation

EIA RS-485 is not supported. Glass or plastic fibre should be used. BFOC/2.5 is the recommended interface to use (BFOC/2.5 is the same as ST connectors). ST connectors are used with the optical power as specified in standard.

For more information, refer to IEC standard IEC 60870-5-103.

19.7 MULTICMDRCV and MULTICMDSND

19.7.1 Identification

Function description	IEC 61850 identification	IEC 60617 identification	ANSI/IEEE C37.2 device number
Multiple command and receive	MULTICMDRCV	-	-
Multiple command and send	MULTICMDSND	-	-

19.7.2 Application

The IED provides two function blocks enabling several IEDs to send and receive signals via the interbay bus. The sending function block, MULTICMDSND, takes 16 binary inputs. LON enables these to be transmitted to the equivalent receiving function block, MULTICMDRCV, which has 16 binary outputs.

19.7.3 Setting guidelines

19.7.3.1 Settings

The parameters for the multiple command function are set via PCM600.

The *Mode* setting sets the outputs to either a *Steady* or *Pulsed* mode.

Section 20 Remote communication

20.1 Binary signal transfer

20.1.1 Identification

Function description	IEC 61850 identification	IEC 60617 identification	ANSI/IEEE C37.2 device number
Binary signal transfer	BinSignReceive	-	-
Binary signal transfer	BinSignTransm	-	-

20.1.2 Application

The IEDs can be equipped with communication devices for line differential communication and/or communication of binary signals between IEDs. The same communication hardware is used for both purposes.

Communication between two IEDs geographically on different locations is a fundamental part of the line differential function.

Sending of binary signals between two IEDs, one in each end of a power line is used in teleprotection schemes and for direct transfer trips. In addition to this, there are application possibilities, for example, blocking/enabling functionality in the remote substation, changing setting group in the remote IED depending on the switching situation in the local substation and so on.

When equipped with a LDCM, a 64 kbit/s communication channel can be connected to the IED, which will then have the capacity of 192 binary signals to be communicated with a remote IED. For RED670, the number of binary signals is limited to 8 because the line differential communication is included in the same telegrams.

20.1.2.1 Communication hardware solutions

The LDCM (Line Data Communication Module) has an optical connection such that two IEDs can be connected over a direct fibre (multimode), as shown in figure 421. The protocol used is IEEE/ANSI C37.94. The distance with this solution is typical 110 km/68 miles.

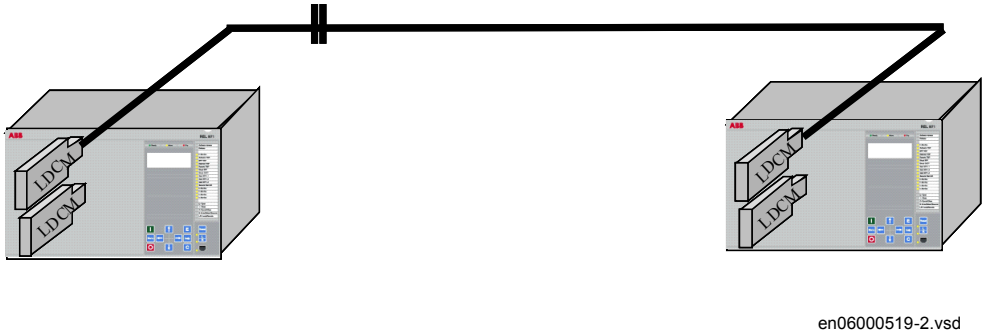

Figure 421: Direct fibre optical connection between two IEDs with LDCM

The LDCM can also be used together with an external optical to galvanic G.703 converter or with an alternative external optical to galvanic X.21 converter as shown in figure 422. These solutions are aimed for connections to a multiplexer, which in turn is connected to a telecommunications transmission network (for example, SDH or PDH).

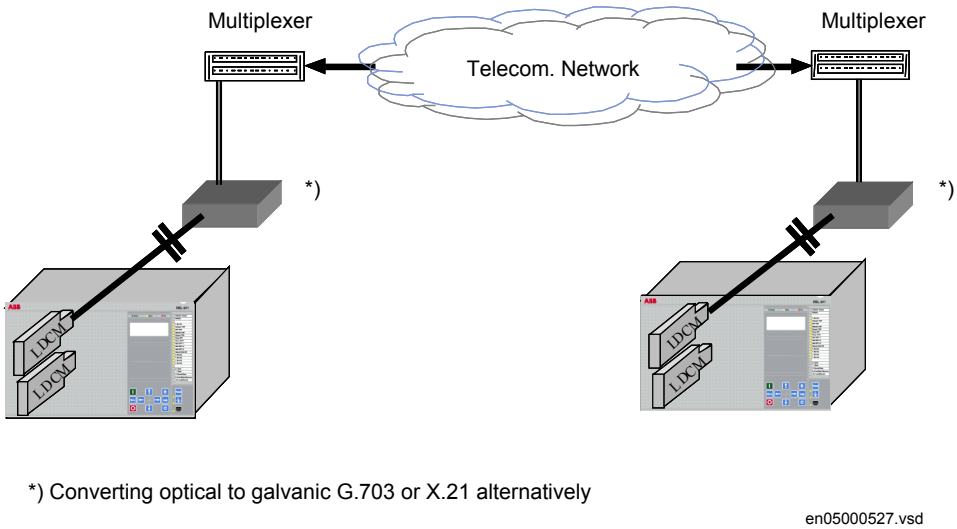

Figure 422: LDCM with an external optical to galvanic converter and a multiplexer

When an external modem G.703 or X21 is used, the connection between LDCM and the modem is made with a multimode fibre of max. 3 km/2 mile length. The IEEE/ANSI C37.94 protocol is always used between LDCM and the modem.

Alternatively, a LDCM with X.21 built-in converter and micro D-sub 15-pole connector output can be used.

20.1.3 Setting guidelines

ChannelMode: This parameter can be set *Enabled* or *Disabled*. Besides this, it can be set *OutOfService* which signifies that the local LDCM is out of service. Thus, with this setting, the communication channel is active and a message is sent to the remote IED that the local IED is out of service, but there is no COMFAIL signal and the analog and binary values are sent as zero.

TerminalNo: This setting shall be used to assign an unique address to each LDCM, in all current differential IEDs. Up to 256 LDCMs can be assigned a unique number. Consider a local IED with two LDCMs:

- LDCM for slot 302: Set *TerminalNo* to 1 and *RemoteTermNo* to 2
- LDCM for slot 303: Set *TerminalNo* to 3 and *RemoteTermNo* to 4

In multiterminal current differential applications, with 4 LDCMs in each IED, up to 20 unique addresses must be set.

The unique address is necessary to give high security against incorrect addressing in the communication system. Using the same number for setting *TerminalNo* in some of the LDCMs, a loop-back test in the communication system can give incorrect trip.

RemoteTermNo: This setting assigns a number to each related LDCM in the remote IED. For each LDCM, the parameter *RemoteTermNo* shall be set to a different value than parameter *TerminalNo*, but equal to the *TerminalNo* of the remote end LDCM. In the remote IED the *TerminalNo* and *RemoteTermNo* settings are reversed as follows:

- LDCM for slot 302: Set *TerminalNo* to 2 and *RemoteTermNo* to 1
- LDCM for slot 303: Set *TerminalNo* to 4 and *RemoteTermNo* to 3

The redundant channel is always configured in the lower position, for example

- Slot 302: Main channel
- Slot 303: Redundant channel

The same is applicable for slot 312-313 and slot 322-323.

DiffSync: Here the method of time synchronization, *Echo* or *GPS*, for the line differential function is selected.

GPSSyncErr: If GPS synchronization is lost, the synchronization of the line differential function will continue during 16 s. based on the stability in the local IED clocks. Thereafter the setting *Block* will block the line differential function or the setting *Echo* will make it continue by using the *Echo* synchronization method. It shall be noticed that using *Echo* in this situation is only safe as long as there is no risk of varying transmission asymmetry.

CommSync: This setting decides the *Master* or *Slave* relation in the communication system and shall not be mistaken for the synchronization of line differential current samples. When direct fibre is used, one LDCM is set as *Master* and the other one as *Slave*. When a modem and multiplexer is used, the IED is always set as *Slave*, as the telecommunication system will provide the clock master.

OptoPower: The setting *LowPower* is used for fibres 0 – 1 km (0.6 mile) and *HighPower* for fibres >1 km (>0.6 mile).

TransmCurr: This setting decides which of 2 possible local currents that shall be transmitted, or if and how the sum of 2 local currents shall be transmitted, or finally if the channel shall be used as a redundant channel.

In a breaker-and-a-half arrangement, there will be 2 local currents, and the grounding on the CTs can be different for these. *CT-SUM* will transmit the sum of the 2 CT groups. *CT-DIFF1* will transmit CT group 1 minus CT group 2 and *CT-DIFF2* will transmit CT group 2 minus CT group 1.

CT-GRP1 or *CT-GRP2* will transmit the respective CT group, and the setting *RedundantChannel* makes the channel be used as a backup channel.

ComFailAlrmDel: Time delay of communication failure alarm. In communication systems, route switching can sometimes cause interruptions with a duration up to 50 ms. Thus, a too short time delay setting might cause nuisance alarms in these situations.

ComFailResDel: Time delay of communication failure alarm reset.

RedChSwTime: Time delay before switchover to a redundant channel in case of primary channel failure.

RedChRturnTime: Time delay before switchback to a the primary channel after channel failure.

AsymDelay: The asymmetry is defined as transmission delay minus receive delay. If a fixed asymmetry is known, the *Echo* synchronization method can be used if the parameter *AsymDelay* is properly set. From the definition follows that the asymmetry will always be positive in one end, and negative in the other end.

AnalogLatency: Local analog latency; A parameter which specifies the time delay (number of samples) between actual sampling and the time the sample reaches the

local communication module, LDCM. The parameter shall be set to 2 when transmitting analog data from the local transformer module, TRM. .

RemAinLatency: Remote analog latency; This parameter corresponds to the *LocAinLatency* set in the remote IED.

MaxTransmDelay: Data for maximum 40 ms transmission delay can be buffered up. Delay times in the range of some ms are common. It shall be noticed that if data arrive in the wrong order, the oldest data will just be disregarded.

CompRange: The set value is the current peak value over which truncation will be made. To set this value, knowledge of the fault current levels should be known. The setting is not overly critical as it considers very high current values for which correct operation normally still can be achieved.

MaxtDiffLevel: Allowed maximum time difference between the internal clocks in respective line end.

Section 21 Basic IED functions

21.1 Authority status ATHSTAT

21.1.1 Application

Authority status (ATHSTAT) function is an indication function block, which informs about two events related to the IED and the user authorization:

- the fact that at least one user has tried to log on wrongly into the IED and it was blocked (the output USRBLKED)
- the fact that at least one user is logged on (the output LOGGEDON)

The two outputs of ATHSTAT function can be used in the configuration for different indication and alarming reasons, or can be sent to the station control for the same purpose.

21.2 Change lock CHNGLCK

21.2.1 Application

Change lock function CHNGLCK is used to block further changes to the IED configuration once the commissioning is complete. The purpose is to make it impossible to perform inadvertent IED configuration and setting changes.

However, when activated, CHNGLCK will still allow the following actions that does not involve reconfiguring of the IED:

- Monitoring
- Reading events
- Resetting events
- Reading disturbance data
- Clear disturbances
- Reset LEDs
- Reset counters and other runtime component states

- Control operations
- Set system time
- Enter and exit from test mode
- Change of active setting group

The binary input controlling the function is defined in ACT or SMT. The CHNGLCK function is configured using ACT.

LOCK	Binary input signal that will activate/deactivate the function, defined in ACT or SMT.

When CHNGLCK has a logical one on its input, then all attempts to modify the IED configuration and setting will be denied and the message "Error: Changes blocked" will be displayed on the local HMI; in PCM600 the message will be "Operation denied by active ChangeLock". The CHNGLCK function should be configured so that it is controlled by a signal from a binary input card. This guarantees that by setting that signal to a logical zero, CHNGLCK is deactivated. If any logic is included in the signal path to the CHNGLCK input, that logic must be designed so that it cannot permanently issue a logical one to the CHNGLCK input. If such a situation would occur in spite of these precautions, then please contact the local ABB representative for remedial action.

21.3 Denial of service DOS

21.3.1 Application

The denial of service functions (DOSFRNT, DOSLANAB and DOSLANCD) are designed to limit the CPU load that can be produced by Ethernet network traffic on the IED. The communication facilities must not be allowed to compromise the primary functionality of the device. All inbound network traffic will be quota controlled so that too heavy network loads can be controlled. Heavy network load might for instance be the result of malfunctioning equipment connected to the network.

DOSFRNT, DOSLANAB and DOSLANCD measure the IED load from communication and, if necessary, limit it for not jeopardizing the IEDs control and protection functionality due to high CPU load. The function has the following outputs:

- LINKUP indicates the Ethernet link status
- WARNING indicates that communication (frame rate) is higher than normal
- ALARM indicates that the IED limits communication

21.3.2 Setting guidelines

The function does not have any parameters available in the local HMI or PCM600.

21.4 IED identifiers

21.4.1 Application

IED identifiers (TERMINALID) function allows the user to identify the individual IED in the system, not only in the substation, but in a whole region or a country.

Use only characters A-Z, a-z and 0-9 in station, object and unit names.

21.5 Product information

21.5.1 Application

The Product identifiers function contains constant data (i.e. not possible to change) that uniquely identifies the IED:

- ProductVer
- ProductDef
- SerialNo
- OrderingNo
- ProductionDate
- IEDProdType

The settings are visible on the local HMI , under **Main menu/Diagnostics/IED status/ Product identifiers**and under**Main menu/Diagnostics/IED Status/IED identifiers**

This information is very helpful when interacting with ABB product support (e.g. during repair and maintenance).

21.5.2 Factory defined settings

The factory defined settings are very useful for identifying a specific version and very helpful in the case of maintenance, repair, interchanging IEDs between different

Substation Automation Systems and upgrading. The factory made settings can not be changed by the customer. They can only be viewed. The settings are found in the local HMI under **Main menu/Diagnostics/IED status/Product identifiers**

The following identifiers are available:

- IEDProdType
  - Describes the type of the IED (like REL, REC or RET). Example: *REL670*
- ProductDef
  - Describes the release number, from the production. Example: *1.2.2.0*
- ProductVer
  - Describes the product version. Example: *1.2.3*

1	is the Major version of the manufactured product this means, new platform of the product
2	is the Minor version of the manufactured product this means, new functions or new hardware added to the product
3	is the Major revision of the manufactured product this means, functions or hardware is either changed or enhanced in the product

- IEDMainFunType
  - Main function type code according to IEC 60870-5-103. Example: 128 (meaning line protection).
- SerialNo
- OrderingNo
- ProductionDate

21.6 Measured value expander block RANGE_XP

21.6.1 Identification

Function description	IEC 61850 identification	IEC 60617 identification	ANSI/IEEE C37.2 device number
Measured value expander block	RANGE_XP	-	-

21.6.2 Application

The current and voltage measurements functions (CVMMXN, CMMXU, VMMXU and VNMMXU), current and voltage sequence measurement functions (CMSQI and VMSQI) and IEC 61850 generic communication I/O functions (MVGAPC) are

provided with measurement supervision functionality. All measured values can be supervised with four settable limits, that is low-low limit, low limit, high limit and high-high limit. The measure value expander block (RANGE_XP) has been introduced to be able to translate the integer output signal from the measuring functions to 5 binary signals, that is below low-low limit, below low limit, normal, above high-high limit or above high limit. The output signals can be used as conditions in the configurable logic.

21.6.3 Setting guidelines

There are no settable parameters for the measured value expander block function.

21.7 Parameter setting groups

21.7.1 Application

Six sets of settings are available to optimize IED operation for different power system conditions. By creating and switching between fine tuned setting sets, either from the local HMI or configurable binary inputs, results in a highly adaptable IED that can cope with a variety of power system scenarios.

Different conditions in networks with different voltage levels require highly adaptable protection and control units to best provide for dependability, security and selectivity requirements. Protection units operate with a higher degree of availability, especially, if the setting values of their parameters are continuously optimized according to the conditions in the power system.

Operational departments can plan for different operating conditions in the primary equipment. The protection engineer can prepare the necessary optimized and pre-tested settings in advance for different protection functions. Six different groups of setting parameters are available in the IED. Any of them can be activated through the different programmable binary inputs by means of external or internal control signals.

A function block, SETGRPS, defines how many setting groups are used. Setting is done with parameter *MAXSETGR* and shall be set to the required value for each IED. Only the number of setting groups set will be available in the Parameter Setting tool for activation with the ActiveGroup function block.

21.7.2 Setting guidelines

The setting *ActiveSetGrp*, is used to select which parameter group to be active. The active group can also be selected with configured input to the function block SETGRPS.

The length of the pulse, sent out by the output signal GRP_CHGD when an active group has changed, is set with the parameter *t*.

The parameter *MAXSETGR* defines the maximum number of setting groups in use to switch between. Only the selected number of setting groups will be available in the Parameter Setting tool (PST) for activation with the ActiveGroup function block.

21.8 Rated system frequency PRIMVAL

21.8.1 Identification

Function description	IEC 61850 identification	IEC 60617 identification	ANSI/IEEE C37.2 device number
Primary system values	PRIMVAL	-	-

21.8.2 Application

The rated system frequency is set under **Main menu/General settings/ Power system/ Primary Values** in the local HMI and PCM600 parameter setting tree.

21.8.3 Setting guidelines

Set the system rated frequency. Refer to section "Signal matrix for analog inputs SMAI" for description on frequency tracking.

21.9 Summation block 3 phase 3PHSUM

21.9.1 Application

The analog summation block 3PHSUM function block is used in order to get the sum of two sets of 3 phase analog signals (of the same type) for those IED functions that might need it.

21.9.2 Setting guidelines

The summation block receives the three-phase signals from SMAI blocks. The summation block has several settings.

SummationType: Summation type (*Group 1 + Group 2*, *Group 1 - Group 2*, *Group 2 - Group 1* or *–(Group 1 + Group 2)*).

DFTReference: The reference DFT block (*InternalDFT Ref*,*DFTRefGrp1* or *External DFT ref*) .

FreqMeasMinVal: The minimum value of the voltage for which the frequency is calculated, expressed as percent of *VBase*base voltage setting (for each instance x).

GlobalBaseSel: Selects the global base value group used by the function to define (*IBase*), (*VBase*) and (*SBase*).

21.10 Global base values GBASVAL

21.10.1 Identification

Function description	IEC 61850 identification	IEC 60617 identification	ANSI/IEEE C37.2 device number
Global base values	GBASVAL	-	-

21.10.2 Application

Global base values function (GBASVAL) is used to provide global values, common for all applicable functions within the IED. One set of global values consists of values for current, voltage and apparent power and it is possible to have six different sets.

This is an advantage since all applicable functions in the IED use a single source of base values. This facilitates consistency throughout the IED and also facilitates a single point for updating values when necessary.

Each applicable function in the IED has a parameter, *GlobalBaseSel*, defining one out of the six sets of GBASVAL functions.

21.10.3 Setting guidelines

VBase: Phase-to-phase voltage value to be used as a base value for applicable functions throughout the IED.

IBase: Phase current value to be used as a base value for applicable functions throughout the IED.

SBase: Standard apparent power value to be used as a base value for applicable functions throughout the IED, typically $SBase=\sqrt{3}\cdot VBase\cdot IBase$.

21.11 Signal matrix for binary inputs SMBI

21.11.1 Application

The Signal matrix for binary inputs function SMBI is used within the Application Configuration tool in direct relation with the Signal Matrix tool. SMBI represents the way binary inputs are brought in for one IED configuration.

21.11.2 Setting guidelines

There are no setting parameters for the Signal matrix for binary inputs SMBI available to the user in Parameter Setting tool. However, the user shall give a name to SMBI instance and the SMBI inputs, directly in the Application Configuration tool. These names will define SMBI function in the Signal Matrix tool. The user defined name for the input or output signal will also appear on the respective output or input signal.

21.12 Signal matrix for binary outputs SMBO

21.12.1 Application

The Signal matrix for binary outputs function SMBO is used within the Application Configuration tool in direct relation with the Signal Matrix tool. SMBO represents the way binary outputs are sent from one IED configuration.

21.12.2 Setting guidelines

There are no setting parameters for the Signal matrix for binary outputs SMBO available to the user in Parameter Setting tool. However, the user must give a name to SMBO instance and SMBO outputs, directly in the Application Configuration tool. These names will define SMBO function in the Signal Matrix tool.

21.13 Signal matrix for mA inputs SMMI

21.13.1 Application

The Signal matrix for mA inputs function SMMI is used within the Application Configuration tool in direct relation with the Signal Matrix tool. SMMI represents the way milliamp (mA) inputs are brought in for one IED configuration.

21.13.2 Setting guidelines

There are no setting parameters for the Signal matrix for mA inputs SMMI available to the user in the Parameter Setting tool. However, the user must give a name to SMMI instance and SMMI inputs, directly in the Application Configuration tool.

21.14 Signal matrix for analog inputs SMAI

21.14.1 Application

Signal matrix for analog inputs (SMAI), also known as the preprocessor function block, analyses the connected four analog signals (three phases and neutral) and calculates all relevant information from them like the phasor magnitude, phase angle, frequency, true RMS value, harmonics, sequence components and so on. This information is then used by the respective functions connected to this SMAI block in ACT (for example protection, measurement or monitoring functions).

21.14.2 Frequency values

The frequency functions includes a functionality based on level of positive sequence voltage, *IntBlockLevel*, to validate if the frequency measurement is valid or not. If

positive sequence voltage is lower than *IntBlockLevel* the function is blocked. *IntBlockLevel*, is set in % of *VBase*/√3

If SMAI setting *ConnectionType* is *Ph-Ph* at least two of the inputs GRPx_A, GRPx_B and GRPx_C must be connected in order to calculate positive sequence voltage. Note that phase to phase inputs shall always be connected as follows: L1-L2 to GRPxL1, L2-L3 to GRPxL2, L3-L1 to GRPxL3. If SMAI setting *ConnectionType* is *Ph-N*, all three inputs GRPx_A, GRPx_B and GRPx_C must be connected in order to calculate positive sequence voltage.

If only one phase-phase voltage is available and SMAI setting *ConnectionType* is *Ph-Ph* the user is advised to connect two (not three) of the inputs GRPx_A, GRPx_B and GRPx_C to the same voltage input as shown in figure 423 to make SMAI calculating a positive sequence voltage.

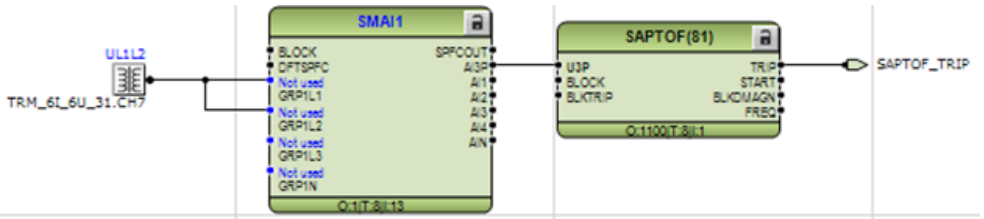

IEC10000060-1-en.vsd

Figure 423: Connection example

The above described scenario does not work if SMAI setting *ConnectionType* is *Ph-N*. If only one phase-ground voltage is available, the same type of connection can be used but the SMAI *ConnectionType* setting must still be *Ph-Ph* and this has to be accounted for when setting *IntBlockLevel*. If SMAI setting *ConnectionType* is *Ph-N* and the same voltage is connected to all three SMAI inputs, the positive sequence voltage will be zero and the frequency functions will not work properly.

The outputs from the above configured SMAI block shall only be used for Overfrequency protection (SAPTOF, 81), Underfrequency protection (SAPTUF, 81) and Rate-of-change frequency protection (SAPFRC, 81) due to that all other information except frequency and positive sequence voltage might be wrongly calculated.

21.14.3 Setting guidelines

The parameters for the signal matrix for analog inputs (SMAI) functions are set via the local HMI or PCM600.

Every SMAI function block can receive four analog signals (three phases and one neutral value), either voltage or current. SMAI outputs give information about every aspect of the 3ph analog signals acquired (phase angle, RMS value, frequency and frequency derivates, and so on – 244 values in total). Besides the block “group name”, the analog inputs type (voltage or current) and the analog input names that can be set directly in ACT.

Application functions should be connected to a SMAI block with same task cycle as the application function, except for e.g. measurement functions that run in slow cycle tasks.

DFTRefExtOut: Parameter valid only for function block SMAI1 .

Reference block for external output (SPFCOUT function output).

DFTReference: Reference DFT for the SMAI block use.

These DFT reference block settings decide DFT reference for DFT calculations. The setting *InternalDFTRef* will use fixed DFT reference based on set system frequency. *DFTRefGrp(n)* will use DFT reference from the selected group block, when own group is selected, an adaptive DFT reference will be used based on calculated signal frequency from own group. The setting *ExternalDFTRef* will use reference based on what is connected to input DFTSPFC.

The setting *ConnectionType*: Connection type for that specific instance (n) of the SMAI (if it is *Ph-N* or *Ph-Ph*). Depending on connection type setting the not connected *Ph-N* or *Ph-Ph* outputs will be calculated as long as they are possible to calculate. E.g. at *Ph-Ph* connection A, B and C will be calculated for use in symmetrical situations. If N component should be used respectively the phase component during faults I_N/V_N must be connected to input 4.

Negation: If the user wants to negate the 3ph signal, it is possible to choose to negate only the phase signals *Negate3Ph*, only the neutral signal *NegateN* or both *Negate3Ph +N*. negation means rotation with 180° of the vectors.

GlobalBaseSel: Selects the global base value group used by the function to define (*IBase*), (*VBase*) and (*SBase*).

MinValFreqMeas: The minimum value of the voltage for which the frequency is calculated, expressed as percent of VBase (for each instance n).

Settings *DFTRefExtOut* and *DFTReference* shall be set to default value *InternalDFTRef* if no VT inputs are available.

Even if the user sets the *AnalogInputType* of a SMAI block to "*Current*", the *MinValFreqMeas* is still visible. However, using the current channel values as base for frequency measurement is **not recommendable** for a number of reasons, not last among them being the low level of currents that one can have in normal operating conditions.

Examples of adaptive frequency tracking

Preprocessing block shall only be used to feed functions within the same execution cycles (e.g. use preprocessing block with cycle 1 to feed transformer differential protection). The only exceptions are measurement functions (CVMMXN, CMMXU,VMMXU, etc.) which shall be fed by preprocessing blocks with cycle 8.

When two or more preprocessing blocks are used to feed one protection function (e.g. over-power function GOPPDOP), it is of outmost importance that parameter setting DFTReference has the same set value for all of the preprocessing blocks involved

Task time group 1	
SMAI instance	**3 phase group**
SMAI1:1	1
SMAI2:2	2
SMAI3:3	3
SMAI4:4	4
SMAI5:5	5
SMAI6:6	6
SMAI7:7	7
SMAI8:8	8
SMAI9:9	9
SMAI10:10	10
SMAI11:11	11
SMAI12:12	12

AdDFTRefCh7

Task time group 2	
SMAI instance	**3 phase group**
SMAI1:13	1
SMAI2:14	2
SMAI3:15	3
SMAI4:16	4
SMAI5:17	5
SMAI6:18	6
SMAI7:19	7
SMAI8:20	8
SMAI9:21	9
SMAI10:22	10
SMAI11:23	11
SMAI12:24	12

AdDFTRefCh4

Task time group 3	
SMAI instance	**3 phase group**
SMAI1:25	1
SMAI2:26	2
SMAI3:27	3
SMAI4:28	4
SMAI5:29	5
SMAI6:30	6
SMAI7:31	7
SMAI8:32	8
SMAI9:33	9
SMAI10:34	10
SMAI11:35	11
SMAI12:36	12

IEC07000197.vsd

Figure 424: Twelve SMAI instances are grouped within one task time. SMAI blocks are available in three different task times in the IED. Two pointed instances are used in the following examples.

The examples shows a situation with adaptive frequency tracking with one reference selected for all instances. In practice each instance can be adapted to the needs of the actual application. The adaptive frequency tracking is needed in IEDs that belong to the protection system of synchronous machines and that are active during run-up and

shout-down of the machine. In other application the usual setting of the parameter *DFTReference* of SMAI is *InternalDFTRef*.

Example 1

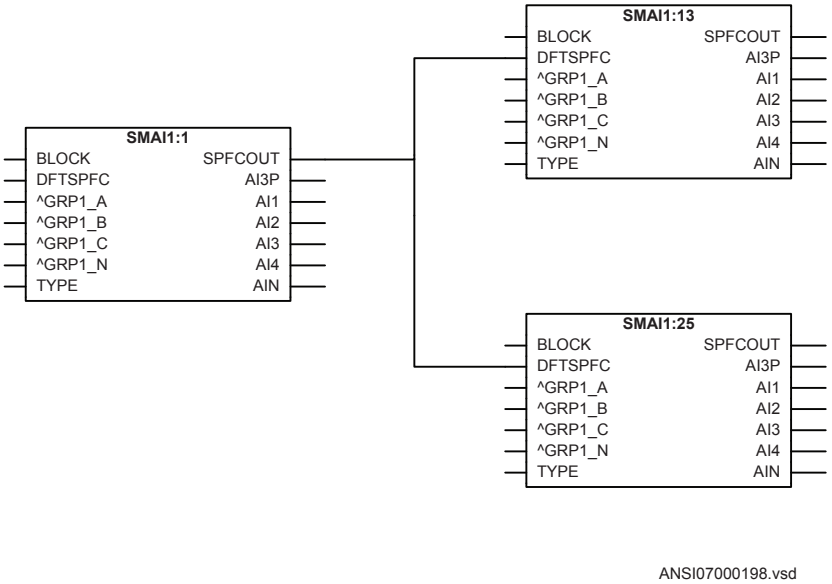

Figure 425: Configuration for using an instance in task time group 1 as DFT reference

Assume instance SMAI7:7 in task time group 1 has been selected in the configuration to control the frequency tracking . Observe that the selected reference instance (i.e. frequency tracking master) must be a voltage type. Observe that positive sequence voltage is used for the frequency tracking feature.

For task time group 1 this gives the following settings (see Figure 424 for numbering):

SMAI1:1: *DFTRefExtOut* = *DFTRefGrp7* to route SMAI7:7 reference to the SPFCOUT output, *DFTReference* = *DFTRefGrp7* for SMAI1:1 to use SMAI7:7 as reference (see Figure 425) SMAI2:2 – SMAI12:12: *DFTReference* = *DFTRefGrp7* for SMAI2:2 – SMAI12:12 to use SMAI7:7 as reference.

For task time group 2 this gives the following settings:

SMAI1:13 – SMAI12:24: *DFTReference* = *ExternalDFTRef* to use DFTSPFC input of SMAI1:13 as reference (SMAI7:7)

For task time group 3 this gives the following settings:

SMAI1:25 – SMAI12:36: *DFTReference* = *ExternalDFTRef* to use DFTSPFC input as reference (SMAI7:7)

Example 2

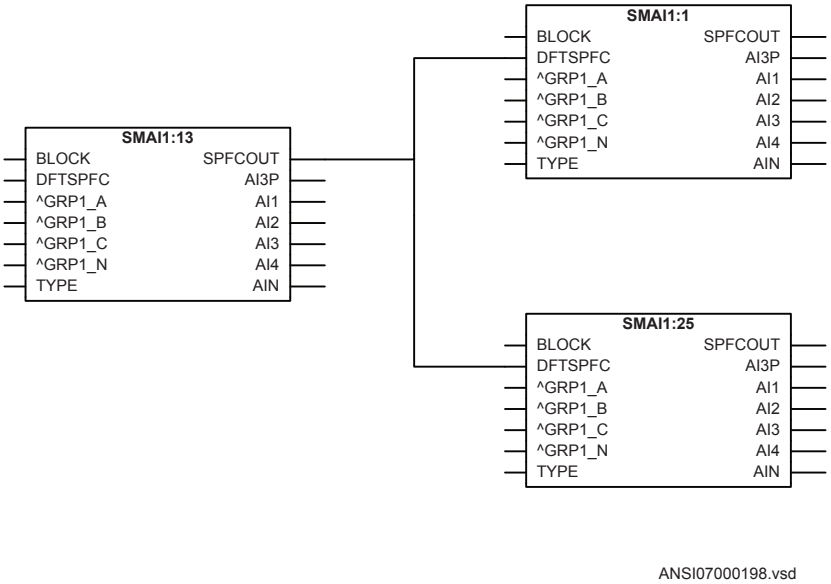

Figure 426: Configuration for using an instance in task time group 2 as DFT reference.

Assume instance SMAI4:16 in task time group 2 has been selected in the configuration to control the frequency tracking for all instances. Observe that the selected reference instance (i.e. frequency tracking master) must be a voltage type. Observe that positive sequence voltage is used for the frequency tracking feature.

For task time group 1 this gives the following settings (see Figure 424 for numbering):

SMAI1:1 – SMAI12:12: *DFTReference* = *ExternalDFTRef* to use DFTSPFC input as reference (SMAI4:16)

For task time group 2 this gives the following settings:

SMAI1:13: *DFTRefExtOut* = *DFTRefGrp4* to route SMAI4:16 reference to the SPFCOUT output, *DFTReference* = *DFTRefGrp4* for SMAI1:13 to use SMAI4:16 as reference (see Figure 426) SMAI2:14 – SMAI12:24: *DFTReference* = *DFTRefGrp4* to use SMAI4:16 as reference.

For task time group 3 this gives the following settings:

SMAI1:25 – SMAI12:36: *DFTReference* = *ExternalDFTRef* to use DFTSPFC input as reference (SMAI4:16)

21.15 Test mode functionality TEST

21.15.1 Application

The protection and control IEDs may have a complex configuration with many included functions. To make the testing procedure easier, the IEDs include the feature that allows individual blocking of a single-, several-, or all functions.

This means that it is possible to see when a function is activated or trips. It also enables the user to follow the operation of several related functions to check correct functionality and to check parts of the configuration, and so on.

21.15.1.1 IEC 61850 protocol test mode

The IEC 61850 Test Mode has improved testing capabilities for IEC 61850 systems. Operator commands sent to the IEC 61850 Mod determine the behavior of the functions. The command can be given from the LHMI under the **Main menu/Test/ Function test modes** menu or remotely from an IEC 61850 client. The possible values of IEC 61850 Mod are described in *Communication protocol manual, IEC 61850 Edition 1* and *Edition 2*.

To be able to set the IEC61850 Mod the parameter remotely, the PST setting *RemoteModControl* may not be set to *Off*. The possible values are *Off*, *Maintenance* or *All levels*. The *Off* value denies all access to data object Mod from remote, *Maintenance* requires that the category of the originator (orCat) is *Maintenance* and *All levels* allow any orCat.

The mod of the Root LD.LNN0 can be configured under **Main menu/Test/Function test modes/Communication/Station communication/IEC61850 LD0 LLN0/ LD0LLN0:1**

When the Mod is changed at this level, all components under the logical device update their own behavior according to IEC61850-7-4. The supported values of IEC61850 Mod are described in *Communication protocol manual, IEC 61850 Edition 2*. The IEC61850 test mode is indicated with the Start LED on the LHMI.

The mod of an specific component can be configured under **Main menu/Test/ Function test modes/Communication/Station Communication**

It is possible that the behavior is also influenced by other sources as well, independent of the mode, such as the insertion of the test handle, loss of SV, and IED configuration

or LHMI. If a function of an IED is set to *Off*, the related *Beh* is set to *Off* as well. The related mod keeps its current state.

When the setting *Operation* is set to *Off*, the behavior is set to *Off* and it is not possible to override it. When a behavior of a function is *Off*the function will not execute.

When IEC61850 Mod of a function is set to *Off* or *Blocked*, the Start LED on the LHMI will be set to flashing to indicate the abnormal operation of the IED.

The IEC61850-7-4 gives a detailed overview over all aspects of the test mode and other states of mode and behavior.

- When the *Beh* of a component is set to *Test*, the component is not blocked and all control commands with a test bit are accepted.
- When the *Beh* of a component is set to *Test/blocked*, all control commands with a test bit are accepted. Outputs to the process via a non-IEC 61850 link data are blocked by the LN. Only process-related outputs on LNs related to primary equipment are blocked. If there is an XCBR, the outputs *EXC_Open* and *EXC_Close* are blocked.
- When the *Beh* of a component is set to *Blocked*, all control commands with a test bit are accepted. Outputs to the process via a non-IEC 61850 link data are blocked by the LN. In addition, the components can be blocked when their *Beh* is *blocked*. This can be done if the component has a block input. The block status of a component is shown as the *Blk* output under the **Test/Function status** menu. If the *Blk* output is not shown, the component cannot be blocked.

21.15.2 Setting guidelines

Remember always that there are two possible ways to place the IED in the *TestMode= Enabled*" state. If, the IED is set to normal operation (*TestMode = Disabled*), but the functions are still shown being in the test mode, the input signal INPUT on the TESTMODE function block might be activated in the configuration.

21.16 Self supervision with internal event list

21.16.1 Application

The protection and control IEDs have many functions included . The included self-supervision with internal event list function block provides good supervision of the IED. The fault signals make it easier to analyze and locate a fault.

Both hardware and software supervision is included and it is also possible to indicate possible faults through a hardware contact on the power supply module and/or through the software communication.

Internal events are generated by the built-in supervisory functions. The supervisory functions supervise the status of the various modules in the IED and, in case of failure, a corresponding event is generated. Similarly, when the failure is corrected, a corresponding event is generated.

Apart from the built-in supervision of the various modules, events are also generated when the status changes for the:

- built-in real time clock (in operation/out of order).
- external time synchronization (in operation/out of order).

Events are also generated:

- whenever any setting in the IED is changed.

The internal events are time tagged with a resolution of 1 ms and stored in a list. The list can store up to 40 events. The list is based on the FIFO principle, that is, when it is full, the oldest event is overwritten. The list contents cannot be modified, but the whole list can be cleared using the Reset menu in the LHMI.

The list of internal events provides valuable information, which can be used during commissioning and fault tracing.

The information can only be retrieved with the aid of PCM600 Event Monitoring Tool. The PC can either be connected to the front port, or to the port at the back of the IED.

21.17 Time synchronization

21.17.1 Application

Use time synchronization to achieve a common time base for the IEDs in a protection and control system. This makes it possible to compare events and disturbance data between all IEDs in the system.

Time-tagging of internal events and disturbances are an excellent help when evaluating faults. Without time synchronization, only the events within the IED can be compared to one another. With time synchronization, events and disturbances within the entire station, and even between line ends, can be compared at evaluation.

In the IED, the internal time can be synchronized from a number of sources:

- BIN (Binary Minute Pulse)
- DNP
- GPS
- IEC103
- SNTP
- IRIG-B
- SPA
- LON
- PPS

For time synchronization of line differential protection RED670 with diff communication in GPS-mode, a GPS-based time synchronization is needed. This can be optical IRIG-B with 1344 from an external GPS-clock or an internal GPS-receiver.

Out of these, LON and SPA contains two types of synchronization messages:

- Coarse time messages are sent every minute and contain complete date and time, that is year, month, day, hour, minute, second and millisecond.
- Fine time messages are sent every second and comprise only seconds and milliseconds.

The setting tells the IED which of these that shall be used to synchronize the IED.

It is possible to set a backup time-source for GPS signal, for instance SNTP. In this case, when the GPS signal quality is bad, the IED will automatically choose SNTP as the time-source. At a given point in time, only one time-source will be used.

21.17.2 Setting guidelines

System time

The time is set with years, month, day, hour, minute, second and millisecond.

Synchronization

The setting parameters for the real-time clock with external time synchronization (TIME) are set via local HMI or PCM600.

TimeSynch

When the source of the time synchronization is selected on the local HMI, the parameter is called *TimeSynch*. The time synchronization source can also be set from PCM600. The setting alternatives are:

FineSyncSource which can have the following values:

- *Disabled*
- *SPA*
- *LON*
- *BIN* (Binary Minute Pulse)
- *GPS*
- *GPS+SPA*
- *GPS+LON*
- *GPS+BIN*
- *SNTP*
- *GPS+SNTP*
- *GPS+IRIG-B*
- *IRIG-B*
- *PPS*

CoarseSyncSrc which can have the following values:

- *Disabled*
- *SPA*
- *LON*
- *SNTP*
- *DNP*

The function input to be used for minute-pulse synchronization is called BININPUT.

The system time can be set manually, either via the local HMI or via any of the communication ports. The time synchronization fine tunes the clock (seconds and milliseconds).

The parameter *SyncMaster* defines if the IED is a master, or not a master for time synchronization in a system of IEDs connected in a communication network (IEC61850-8-1). The *SyncMaster* can have the following values:

- *Disabled*
- *SNTP -Server*

Set the course time synchronizing source (*CoarseSyncSrc*) to *Disabled* when GPS time synchronization of line differential function is used. Set the fine time synchronization source (*FineSyncSource*) to *GPS*. The GPS will thus provide the complete time synchronization. GPS alone shall synchronize the analogue values in such systems.

21.17.2.1 Process bus IEC 61850-9-2LE synchronization

For the time synchronization of the process bus communication (IEC 61850-9-2LE protocol) an optical PPS or IRIG-B signal can be used. This signal should emanate from either an external GPS clock, or from the merging unit.

An optical PPS signal can be supplied to the optical interface of the IRIG-B module.

21.17.2.2 Time synchronization for differential protection and IEC 61850-9-2LE sampled data

When using differential communication in conjunction with sampled data received from merging units (MU) over the IEC 61850-9-2LE process bus, the MU and the IED needs to be controlled by the same GPS synchronized clock. The required accuracy is +/- 2 µs. The MU needs to get an optic PPS signal from the clock in order to take samples at the correct time and the IED needs to get the time-quality information in IRIG-B, using the 1344 protocol, from the very same clock in order to be able to block in case of failure in the clock source.

The settings for time synchronization should be *CourseSyncSrc = Disabled*, *FineSyncSource = IRIG-B*, *TimeAdjustRate = Fast*. The setting for *Encoding* in SYNCHIRIG-B needs to be set to *1344*.

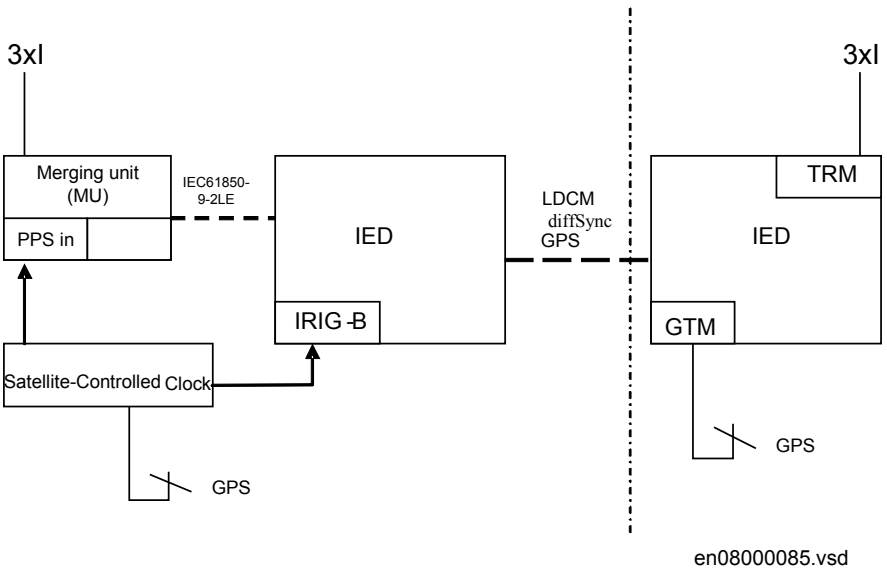

Figure 427: Time synchronization of merging unit and IED

The parameter *DiffSync* for the LDCM needs to be set to *GPS* and the *GPSSyncErr* needs to be set to *Block*.

In "ECHO" mode MU and IED still need to be synchronized. In this case they can be synchronized with either PPS or IRIG-B.

Section 22 Requirements

22.1 Current transformer requirements

The performance of a protection function will depend on the quality of the measured current signal. Saturation of the current transformers (CTs) will cause distortion of the current signals and can result in a failure to operate or cause unwanted operations of some functions. Consequently CT saturation can have an influence on both the dependability and the security of the protection. This protection IED has been designed to permit heavy CT saturation with maintained correct operation.

22.1.1 Current transformer classification

To guarantee correct operation, the current transformers (CTs) must be able to correctly reproduce the current for a minimum time before the CT will begin to saturate. To fulfill the requirement on a specified time to saturation the CTs must fulfill the requirements of a minimum secondary e.m.f. that is specified below.

There are several different ways to specify CTs. Conventional magnetic core CTs are usually specified and manufactured according to some international or national standards, which specify different protection classes as well. There are many different standards and a lot of classes but fundamentally there are three different types of CTs:

- High remanence type CT
- Low remanence type CT
- Non remanence type CT

The high remanence type has no limit for the remanent flux. This CT has a magnetic core without any airgaps and a remanent flux might remain almost infinite time. In this type of transformers the remanence can be up to around 80% of the saturation flux. Typical examples of high remanence type CT are class P, PX, TPX according to IEC, class P, X according to BS (old British Standard) and non gapped class C, K according to ANSI/IEEE.

The low remanence type has a specified limit for the remanent flux. This CT is made with a small air gap to reduce the remanence to a level that does not exceed 10% of the saturation flux. The small air gap has only very limited influences on the other properties of the CT. Class PXR, TPY according to IEC are low remanence type CTs.

The non remanence type CT has practically negligible level of remanent flux. This type of CT has relatively big air gaps in order to reduce the remanence to practically zero level. In the same time, these air gaps reduce the influence of the DC-component from the primary fault current. The air gaps will also decrease the measuring accuracy in the non-saturated region of operation. Class TPZ according to IEC is a non remanence type CT.

Different standards and classes specify the saturation e.m.f. in different ways but it is possible to approximately compare values from different classes. The rated equivalent limiting secondary e.m.f. E_{al} according to the IEC 61869–2 standard is used to specify the CT requirements for the IED. The requirements are also specified according to other standards.

22.1.2 Conditions

The requirements are a result of investigations performed in our network simulator. The current transformer models are representative for current transformers of high remanence and low remanence type. The results may not always be valid for non remanence type CTs (TPZ).

The performances of the protection functions have been checked in the range from symmetrical to fully asymmetrical fault currents. Primary time constants of at least 120 ms have been considered at the tests. The current requirements below are thus applicable both for symmetrical and asymmetrical fault currents.

Depending on the protection function phase-to-ground, phase-to-phase and three-phase faults have been tested for different relevant fault positions for example, close in forward and reverse faults, zone 1 reach faults, internal and external faults. The dependability and security of the protection was verified by checking for example, time delays, unwanted operations, directionality, overreach and stability.

The remanence in the current transformer core can cause unwanted operations or minor additional time delays for some protection functions. As unwanted operations are not acceptable at all maximum remanence has been considered for fault cases critical for the security, for example, faults in reverse direction and external faults. Because of the almost negligible risk of additional time delays and the non-existent risk of failure to operate the remanence have not been considered for the dependability cases. The requirements below are therefore fully valid for all normal applications.

It is difficult to give general recommendations for additional margins for remanence to avoid the minor risk of an additional time delay. They depend on the performance and economy requirements. When current transformers of low remanence type (for example, TPY, PR) are used, normally no additional margin is needed. For current transformers of high remanence type (for example, P, PX, TPX) the small probability of fully asymmetrical faults, together with high remanence in the same direction as the

flux generated by the fault, has to be kept in mind at the decision of an additional margin. Fully asymmetrical fault current will be achieved when the fault occurs at approximately zero voltage (0°). Investigations have shown that 95% of the faults in the network will occur when the voltage is between 40° and 90°. In addition fully asymmetrical fault current will not exist in all phases at the same time.

22.1.3 Fault current

The current transformer requirements are based on the maximum fault current for faults in different positions. Maximum fault current will occur for three-phase faults or single phase-to-ground faults. The current for a single phase-to-ground fault will exceed the current for a three-phase fault when the zero sequence impedance in the total fault loop is less than the positive sequence impedance.

When calculating the current transformer requirements, maximum fault current for the relevant fault position should be used and therefore both fault types have to be considered.

22.1.4 Secondary wire resistance and additional load

The voltage at the current transformer secondary terminals directly affects the current transformer saturation. This voltage is developed in a loop containing the secondary wires and the burden of all relays in the circuit. For ground faults the loop includes the phase and neutral wire, normally twice the resistance of the single secondary wire. For three-phase faults the neutral current is zero and it is just necessary to consider the resistance up to the point where the phase wires are connected to the common neutral wire. The most common practice is to use four wires secondary cables so it normally is sufficient to consider just a single secondary wire for the three-phase case.

The conclusion is that the loop resistance, twice the resistance of the single secondary wire, must be used in the calculation for phase-to-ground faults and the phase resistance, the resistance of a single secondary wire, may normally be used in the calculation for three-phase faults.

As the burden can be considerable different for three-phase faults and phase-to-ground faults it is important to consider both cases. Even in a case where the phase-to-ground fault current is smaller than the three-phase fault current the phase-to-ground fault can be dimensioning for the CT depending on the higher burden.

In isolated or high impedance grounded systems the phase-to-ground fault is not the dimensioning case. Therefore, the resistance of the single secondary wire can always be used in the calculation for this kind of power systems.

22.1.5 General current transformer requirements

The current transformer ratio is mainly selected based on power system data for example, maximum load and/or maximum fault current. It should be verified that the current to the protection is higher than the minimum operating value for all faults that are to be detected with the selected CT ratio. It should also be verified that the maximum possible fault current is within the limits of the IED.

The current error of the current transformer can limit the possibility to use a very sensitive setting of a sensitive residual overcurrent protection. If a very sensitive setting of this function will be used it is recommended that the current transformer should have an accuracy class which have an current error at rated primary current that is less than ±1% (for example, 5P). If current transformers with less accuracy are used it is advisable to check the actual unwanted residual current during the commissioning.

22.1.6 Rated equivalent secondary e.m.f. requirements

With regard to saturation of the current transformer all current transformers of high remanence and low remanence type that fulfill the requirements on the rated equivalent limiting secondary e.m.f. E_{al} below can be used. The characteristic of the non remanence type CT (TPZ) is not well defined as far as the phase angle error is concerned. If no explicit recommendation is given for a specific function we therefore recommend contacting ABB to confirm that the non remanence type can be used.

The CT requirements for the different functions below are specified as a rated equivalent limiting secondary e.m.f. E_{al} according to the IEC 61869-2 standard. Requirements for CTs specified according to other classes and standards are given at the end of this section.

22.1.6.1 Line differential protection

The current transformers must have a rated equivalent limiting secondary e.m.f. E_{al} that is larger than the maximum of the required rated equivalent limiting secondary e.m.f. E_{alreq} below:

$$E_{al} \geq E_{alreq} = I_{kmax} \cdot \frac{I_{sn}}{I_{pn}} \cdot \left(R_{CT} + R_L + \frac{S_R}{I_n^2} \right)$$

(Equation 558)

$$E_{al} \geq E_{alreq} = 2 \cdot I_{tmax} \cdot \frac{I_{sn}}{I_{pn}} \cdot \left(R_{CT} + R_L + \frac{S_R}{I_n^2} \right)$$

(Equation 559)

where:

I_{kmax}	Maximum primary fundamental frequency fault current for internal close-in faults (A)
I_{tmax}	Maximum primary fundamental frequency fault current for through fault current for external faults (A)
I_{pr}	The rated primary CT current (A)
I_{sr}	The rated secondary CT current (A)
I_n	The nominal current of the protection IED (A)
R_{ct}	The secondary resistance of the CT (Ω)
R_L	The resistance of the secondary wire and additional load (Ω). The loop resistance containing the phase and neutral wires must be used for faults in solidly grounded systems. The resistance of a single secondary wire should be used for faults in high impedance grounded systems.
S_R	The burden of an IED current input channel (VA). S_R=0.020 VA/channel for I_r=1 A and S_R=0.150 VA/channel for I_r=5 A

In substations with breaker-and-a-half or double-busbar double-breaker arrangement, the through fault current may pass two main CTs for the line differential protection without passing the protected line. In such cases and if both main CTs have equal ratios and magnetization characteristics the CTs must satisfy equation 558 and equation 560.

$$E_{al} \geq E_{alreq} = I_{tfdb} \cdot \frac{I_{sn}}{I_{pn}} \cdot \left(R_{CT} + R_L + \frac{S_R}{I_n^2} \right)$$

(Equation 560)

where:

I_{tfdb}	Maximum primary fundamental frequency through fault current that passes two main CTs (breaker-and-a-half or double-breaker) without passing the protected line (A)

If a power transformer is included in the protected zone of the line differential protection the CTs must also fulfill equation 561.

$$E_{al} \geq E_{alreq} = 30 \cdot I_{nt} \cdot \frac{I_{sn}}{I_{pn}} \cdot \left(R_{CT} + R_L + \frac{S_R}{I_n^2} \right)$$

(Equation 561)

where:

I_{rt}	The rated primary current of the power transformer (A)

22.1.6.2 Distance protection

The current transformers must have a rated equivalent limiting secondary e.m.f. E_{al} that is larger than the maximum of the required rated equivalent limiting secondary e.m.f. E_{alreq} below:

$$E_{al} \geq E_{alreq} = \frac{I_{kmax} \cdot I_{sn}}{I_{pn}} \cdot \left(R_{CT} + R_L + \frac{S_R}{I_n^2} \right)$$

(Equation 562)

$$E_{al} \geq E_{alreq} = \frac{I_{kzone1} \cdot I_{sn}}{I_{pn}} \cdot \left(R_{CT} + R_L + \frac{S_R}{I_n^2} \right)$$

(Equation 563)

where:

I_{kmax}	Maximum primary fundamental frequency current for close-in forward and reverse faults (A)
I_{kzone1}	Maximum primary fundamental frequency current for faults at the end of zone 1 reach (A)
I_{pr}	The rated primary CT current (A)
I_{sr}	The rated secondary CT current (A)
I_n	The nominal current of the protection IED (A)
R_{ct}	The secondary resistance of the CT (Ω)
R_L	The resistance of the secondary wire and additional load (Ω). In solidly grounded systems the loop resistance containing the phase and neutral wires should be used for phase-to-ground faults and the resistance of the phase wire should be used for three-phase faults. In isolated or high impedance grounded systems the resistance of the single secondary wire can always be used.
S_R	The burden of an IED current input channel (VA). S_R=0.020 VA/channel for I_r=1 A and S_R=0.150 VA/channel for I_r=5 A

Table continues on next page

a	This factor depends on the design of the protection function and can be a function of the primary DC time constant of the close-in fault current.
k	This factor depends on the design of the protection function and can be a function of the primary DC time constant of the fault current for a fault at the set reach of zone 1.
	The a- and k-factors have the following values for the different types of distance function: **High speed distance:** (ZMFPDIS and ZMFCPDIS) a = 1 for primary time constant Tp ≤ 400 ms k = 3 for primary time constant Tp ≤ 200 ms **Quadrilateral distance:** (ZMQPDIS, ZMQAPDIS and ZMCPDIS, ZMCAPDIS and ZMMPDIS, ZMMAPDIS) a = 1 for primary time constant Tp ≤ 100 ms a = 3 for primary time constant Tp > 100 and ≤ 400 ms k = 4 for primary time constant Tp ≤ 50 ms k = 5 for primary time constant Tp > 50 and ≤ 150 ms **Mho distance:** (ZMHPDIS) a = 1 for primary time constant Tp ≤ 100 ms a = 3 for primary time constant Tp > 100 and ≤ 400 ms k = 4 for primary time constant Tp ≤ 40 ms k = 5 for primary time constant Tp > 40 and ≤ 150 ms

22.1.7 Current transformer requirements for CTs according to other standards

All kinds of conventional magnetic core CTs are possible to use with the IEDs if they fulfill the requirements corresponding to the above specified expressed as the rated equivalent limiting secondary e.m.f. E_{al} according to the IEC 61869-2 standard. From different standards and available data for relaying applications it is possible to approximately calculate a secondary e.m.f. of the CT comparable with E_{al}. By comparing this with the required rated equivalent limiting secondary e.m.f. E_{alreq} it is possible to judge if the CT fulfills the requirements. The requirements according to some other standards are specified below.

22.1.7.1 Current transformers according to IEC 61869-2, class P, PR

A CT according to IEC 61869-2 is specified by the secondary limiting e.m.f. E_{alf}. The value of the E_{alf} is approximately equal to the corresponding E_{al}. Therefore, the CTs according to class P and PR must have a secondary limiting e.m.f. E_{alf} that fulfills the following:

$$E_{2\max} > \max E_{alreq}$$

(Equation 564)

22.1.7.2 Current transformers according to IEC 61869-2, class PX, PXR (and old IEC 60044-6, class TPS and old British Standard, class X)

CTs according to these classes are specified approximately in the same way by a rated knee point e.m.f. E_{knee} (E_k for class PX and PXR, E_{kneeBS} for class X and the limiting secondary voltage V_{al} for TPS). The value of the E_{knee} is lower than the corresponding E_{al} according to IEC 61869-2. It is not possible to give a general relation between the E_{knee} and the E_{al} but normally the E_{knee} is approximately 80 % of the E_{al}. Therefore, the CTs according to class PX, PXR, X and TPS must have a rated knee point e.m.f. E_{knee} that fulfills the following:

$$S = TD \cdot S_{Old} + (1 - TD) \cdot S_{Calculated}$$

(Equation 565)

22.1.7.3 Current transformers according to ANSI/IEEE

Current transformers according to ANSI/IEEE are partly specified in different ways. A rated secondary terminal voltage V_{ANSI} is specified for a CT of class C. V_{ANSI} is the secondary terminal voltage the CT will deliver to a standard burden at 20 times rated secondary current without exceeding 10 % ratio correction. There are a number of standardized V_{ANSI} values for example, V_{ANSI} is 400 V for a C400 CT. A corresponding rated equivalent limiting secondary e.m.f. E_{alANSI} can be estimated as follows:

$$E_{alANSI} = \left|20 \cdot I_{SN} \cdot R_{CT} + V_{ANSI}\right| = \left|20 \cdot I_{SN} \cdot R_{CT} + 20 \cdot I_{SN} \cdot Z_{bANSI}\right|$$

(Equation 566)

where:

Z_{bANSI} The impedance (that is, with a complex quantity) of the standard ANSI burden for the specific C class (Ω)

V_{ANSI} The secondary terminal voltage for the specific C class (V)

The CTs according to class C must have a calculated rated equivalent limiting secondary e.m.f. E_{alANSI} that fulfils the following:

$$E_{alANSI} > \text{maximum of } E_{alreq}$$

(Equation 567)

A CT according to ANSI/IEEE is also specified by the knee point voltage $V_{kneeANSI}$ that is graphically defined from an excitation curve. The knee point voltage $V_{kneeANSI}$ normally has a lower value than the knee-point e.m.f. according to IEC and BS. $V_{kneeANSI}$ can approximately be estimated to 75 % of the corresponding E_{al} according to IEC 61869-2. Therefore, the CTs according to ANSI/IEEE must have a knee point voltage $V_{kneeANSI}$ that fulfills the following:

$$V_{kneeANSI} > 0.75 \cdot (\text{maximum of } E_{alreq})$$

(Equation 568)

The following guide may also be referred for some more application aspects of ANSI class CTs: IEEE C37.110 (2007), IEEE Guide for the Application of Current Transformers Used for Protective Relaying Purposes.

22.2 Voltage transformer requirements

The performance of a protection function will depend on the quality of the measured input signal. Transients caused by capacitive Coupled voltage transformers (CCVTs) can affect some protection functions.

Magnetic or capacitive voltage transformers can be used.

The capacitive voltage transformers (CCVTs) should fulfill the requirements according to the IEC 61869-5 standard regarding ferro-resonance and transients. The ferro-resonance requirements of the CCVTs are specified in chapter 6.502 of the standard.

The transient responses for three different standard transient response classes, T1, T2 and T3 are specified in chapter 6.503 of the standard. CCVTs according to all classes can be used.

The protection IED has effective filters for these transients, which gives secure and correct operation with CCVTs.

22.3 SNTP server requirements

The SNTP server to be used is connected to the local network, that is not more than 4-5 switches or routers away from the IED. The SNTP server is dedicated for its task, or at least equipped with a real-time operating system, that is not a PC with SNTP server software. The SNTP server should be stable, that is, either synchronized from a stable source like GPS, or local without synchronization. Using a local SNTP server without

synchronization as primary or secondary server in a redundant configuration is not recommended.

22.4 IEC 61850-9-2LE Merging unit requirements

The merging units that supply the IED with measured values via the process bus must fulfill the IEC61850-9-2LE standard.

This part of the IEC61850 is specifying “Communication Service Mapping (SCSM) – Sampled values over ISO/IEC 8802”, in other words – sampled data over Ethernet. The 9-2 part of the IEC61850 protocol uses also definitions from 7-2, “Basic communication structure for substation and feeder equipment – Abstract communication service interface (ACSI)”. The set of functionality implemented in the IED (IEC61850-9-2LE) is a subset of the IEC61850-9-2. For example the IED covers the client part of the standard, not the server part.

The standard does not define the sample rate for data, but in the UCA users group recommendations there are indicated sample rates that are adopted, by consensus, in the industry.

There are two sample rates defined: 80 samples/cycle (4000 samples/sec. at 50Hz or 4800 samples/sec. at 60 Hz) for a merging unit “type1” and 256 samples/cycle for a merging unit “type2”. The IED can receive data rates of 80 samples/cycle.

Note that the IEC 61850-9-2 LE standard does not specify the quality of the sampled values, only the transportation. Thus, the accuracy of the current and voltage inputs to the merging unit and the inaccuracy added by the merging unit must be coordinated with the requirement for actual type of protection function.

Factors influencing the accuracy of the sampled values from the merging unit are for example anti aliasing filters, frequency range, step response, truncating, A/D conversion inaccuracy, time tagging accuracy etc.

In principle the accuracy of the current and voltage transformers, together with the merging unit, shall have the same quality as direct input of currents and voltages.

Section 23 Glossary

AC	Alternating current
ACC	Actual channel
ACT	Application configuration tool within PCM600
A/D converter	Analog-to-digital converter
ADBS	Amplitude deadband supervision
ADM	Analog digital conversion module, with time synchronization
AI	Analog input
ANSI	American National Standards Institute
AR	Autoreclosing
ASCT	Auxiliary summation current transformer
ASD	Adaptive signal detection
ASDU	Application service data unit
AWG	American Wire Gauge standard
BBP	Busbar protection
BFOC/2,5	Bayonet fibre optic connector
BFP	Breaker failure protection
BI	Binary input
BIM	Binary input module
BOM	Binary output module
BOS	Binary outputs status
BR	External bistable relay
BS	British Standards
BSR	Binary signal transfer function, receiver blocks
BST	Binary signal transfer function, transmit blocks
C37.94	IEEE/ANSI protocol used when sending binary signals between IEDs
CAN	Controller Area Network. ISO standard (ISO 11898) for serial communication

CB	Circuit breaker
CBM	Combined backplane module
CCITT	Consultative Committee for International Telegraph and Telephony. A United Nations-sponsored standards body within the International Telecommunications Union.
CCM	CAN carrier module
CCVT	Capacitive Coupled Voltage Transformer
Class C	Protection Current Transformer class as per IEEE/ ANSI
CMPPS	Combined megapulses per second
CMT	Communication Management tool in PCM600
CO cycle	Close-open cycle
Codirectional	Way of transmitting G.703 over a balanced line. Involves two twisted pairs making it possible to transmit information in both directions
COM	Command
COMTRADE	Standard Common Format for Transient Data Exchange format for Disturbance recorder according to IEEE/ANSI C37.111, 1999 / IEC60255-24
Contra-directional	Way of transmitting G.703 over a balanced line. Involves four twisted pairs, two of which are used for transmitting data in both directions and two for transmitting clock signals
COT	Cause of transmission
CPU	Central processing unit
CR	Carrier receive
CRC	Cyclic redundancy check
CROB	Control relay output block
CS	Carrier send
CT	Current transformer
CU	Communication unit
CVT or CCVT	Capacitive voltage transformer
DAR	Delayed autoreclosing
DARPA	Defense Advanced Research Projects Agency (The US developer of the TCP/IP protocol etc.)
DBDL	Dead bus dead line

DBLL	Dead bus live line
DC	Direct current
DFC	Data flow control
DFT	Discrete Fourier transform
DHCP	Dynamic Host Configuration Protocol
DIP-switch	Small switch mounted on a printed circuit board
DI	Digital input
DLLB	Dead line live bus
DNP	Distributed Network Protocol as per IEEE Std 1815-2012
DR	Disturbance recorder
DRAM	Dynamic random access memory
DRH	Disturbance report handler
DSP	Digital signal processor
DTT	Direct transfer trip scheme
EHV network	Extra high voltage network
EIA	Electronic Industries Association
EMC	Electromagnetic compatibility
EMF	Electromotive force
EMI	Electromagnetic interference
EnFP	End fault protection
EPA	Enhanced performance architecture
ESD	Electrostatic discharge
F-SMA	Type of optical fibre connector
FAN	Fault number
FCB	Flow control bit; Frame count bit
FOX 20	Modular 20 channel telecommunication system for speech, data and protection signals
FOX 512/515	Access multiplexer
FOX 6Plus	Compact time-division multiplexer for the transmission of up to seven duplex channels of digital data over optical fibers
FUN	Function type

G.703	Electrical and functional description for digital lines used by local telephone companies. Can be transported over balanced and unbalanced lines
GCM	Communication interface module with carrier of GPS receiver module
GDE	Graphical display editor within PCM600
GI	General interrogation command
GIS	Gas-insulated switchgear
GOOSE	Generic object-oriented substation event
GPS	Global positioning system
GSAL	Generic security application
GTM	GPS Time Module
HDLC protocol	High-level data link control, protocol based on the HDLC standard
HFBR connector type	Plastic fiber connector
HMI	Human-machine interface
HSAR	High speed autoreclosing
HV	High-voltage
HVDC	High-voltage direct current
IDBS	Integrating deadband supervision
IEC	International Electrical Committee
IEC 60044-6	IEC Standard, Instrument transformers – Part 6: Requirements for protective current transformers for transient performance
IEC 60870-5-103	Communication standard for protection equipment. A serial master/slave protocol for point-to-point communication
IEC 61850	Substation automation communication standard
IEC 61850–8–1	Communication protocol standard
IEEE	Institute of Electrical and Electronics Engineers
IEEE 802.12	A network technology standard that provides 100 Mbits/s on twisted-pair or optical fiber cable
IEEE P1386.1	PCI Mezzanine Card (PMC) standard for local bus modules. References the CMC (IEEE P1386, also known as Common Mezzanine Card) standard for the mechanics and the PCI specifications from the PCI SIG (Special Interest Group) for the electrical EMF (Electromotive force).

IEEE 1686	Standard for Substation Intelligent Electronic Devices (IEDs) Cyber Security Capabilities
IED	Intelligent electronic device
I-GIS	Intelligent gas-insulated switchgear
IOM	Binary input/output module
Instance	When several occurrences of the same function are available in the IED, they are referred to as instances of that function. One instance of a function is identical to another of the same kind but has a different number in the IED user interfaces. The word "instance" is sometimes defined as an item of information that is representative of a type. In the same way an instance of a function in the IED is representative of a type of function.
IP	1. Internet protocol. The network layer for the TCP/IP protocol suite widely used on Ethernet networks. IP is a connectionless, best-effort packet-switching protocol. It provides packet routing, fragmentation and reassembly through the data link layer. 2. Ingression protection, according to IEC 60529
IP 20	Ingression protection, according to IEC 60529, level IP20- Protected against solid foreign objects of 12.5mm diameter and greater.
IP 40	Ingression protection, according to IEC 60529, level IP40- Protected against solid foreign objects of 1mm diameter and greater.
IP 54	Ingression protection, according to IEC 60529, level IP54-Dust-protected, protected against splashing water.
IRF	Internal failure signal
IRIG-B:	InterRange Instrumentation Group Time code format B, standard 200
ITU	International Telecommunications Union
LAN	Local area network
LIB 520	High-voltage software module
LCD	Liquid crystal display
LDCM	Line differential communication module
LDD	Local detection device
LED	Light-emitting diode

LNT	LON network tool
LON	Local operating network
MCB	Miniature circuit breaker
MCM	Mezzanine carrier module
MIM	Milli-ampere module
MPM	Main processing module
MVAL	Value of measurement
MVB	Multifunction vehicle bus. Standardized serial bus originally developed for use in trains.
NCC	National Control Centre
NOF	Number of grid faults
NUM	Numerical module
OCO cycle	Open-close-open cycle
OCP	Overcurrent protection
OEM	Optical Ethernet module
OLTC	On-load tap changer
OTEV	Disturbance data recording initiated by other event than start/ pick-up
OV	Overvoltage
Overreach	A term used to describe how the relay behaves during a fault condition. For example, a distance relay is overreaching when the impedance presented to it is smaller than the apparent impedance to the fault applied to the balance point, that is, the set reach. The relay “sees” the fault but perhaps it should not have seen it.
PCI	Peripheral component interconnect, a local data bus
PCM	Pulse code modulation
PCM600	Protection and control IED manager
PC-MIP	Mezzanine card standard
PMC	PCI Mezzanine card
POR	Permissive overreach
POTT	Permissive overreach transfer trip
Process bus	Bus or LAN used at the process level, that is, in near proximity to the measured and/or controlled components

PSM	Power supply module
PST	Parameter setting tool within PCM600
PT ratio	Potential transformer or voltage transformer ratio
PUTT	Permissive underreach transfer trip
RASC	Synchrocheck relay, COMBIFLEX
RCA	Relay characteristic angle
RISC	Reduced instruction set computer
RMS value	Root mean square value
RS422	A balanced serial interface for the transmission of digital data in point-to-point connections
RS485	Serial link according to EIA standard RS485
RTC	Real-time clock
RTU	Remote terminal unit
SA	Substation Automation
SBO	Select-before-operate
SC	Switch or push button to close
SCL	Short circuit location
SCS	Station control system
SCADA	Supervision, control and data acquisition
SCT	System configuration tool according to standard IEC 61850
SDU	Service data unit
SLM	Serial communication module.
SMA connector	Subminiature version A, A threaded connector with constant impedance.
SMT	Signal matrix tool within PCM600
SMS	Station monitoring system
SNTP	Simple network time protocol – is used to synchronize computer clocks on local area networks. This reduces the requirement to have accurate hardware clocks in every embedded system in a network. Each embedded node can instead synchronize with a remote clock, providing the required accuracy.
SOF	Status of fault

SPA	Strömberg Protection Acquisition (SPA), a serial master/slave protocol for point-to-point communication
SRY	Switch for CB ready condition
ST	Switch or push button to trip
Starpoint	Neutral/Wye point of transformer or generator
SVC	Static VAr compensation
TC	Trip coil
TCS	Trip circuit supervision
TCP	Transmission control protocol. The most common transport layer protocol used on Ethernet and the Internet.
TCP/IP	Transmission control protocol over Internet Protocol. The de facto standard Ethernet protocols incorporated into 4.2BSD Unix. TCP/IP was developed by DARPA for Internet working and encompasses both network layer and transport layer protocols. While TCP and IP specify two protocols at specific protocol layers, TCP/IP is often used to refer to the entire US Department of Defense protocol suite based upon these, including Telnet, FTP, UDP and RDP.
TEF	Time delayed gound-fault protection function
TM	Transmit (disturbance data)
TNC connector	Threaded Neill-Concelman, a threaded constant impedance version of a BNC connector
TP	Trip (recorded fault)
TPZ, TPY, TPX, TPS	Current transformer class according to IEC
TRM	Transformer Module. This module transforms currents and voltages taken from the process into levels suitable for further signal processing.
TYP	Type identification
UMT	User management tool
Underreach	A term used to describe how the relay behaves during a fault condition. For example, a distance relay is underreaching when the impedance presented to it is greater than the apparent impedance to the fault applied to the balance point, that is, the set reach. The relay does not “see” the fault but perhaps it should have seen it. See also Overreach.
UTC	Coordinated Universal Time. A coordinated time scale, maintained by the Bureau International des Poids et Mesures

	(BIPM), which forms the basis of a coordinated dissemination of standard frequencies and time signals. UTC is derived from International Atomic Time (TAI) by the addition of a whole number of "leap seconds" to synchronize it with Universal Time 1 (UT1), thus allowing for the eccentricity of the Earth's orbit, the rotational axis tilt (23.5 degrees), but still showing the Earth's irregular rotation, on which UT1 is based. The Coordinated Universal Time is expressed using a 24-hour clock, and uses the Gregorian calendar. It is used for aeroplane and ship navigation, where it is also sometimes known by the military name, "Zulu time." "Zulu" in the phonetic alphabet stands for "Z", which stands for longitude zero.
UV	Undervoltage
WEI	Weak end infeed logic
VT	Voltage transformer
X.21	A digital signalling interface primarily used for telecom equipment
$3I_O$	Three times zero-sequence current.Often referred to as the residual or the ground-fault current
$3V_O$	Three times the zero sequence voltage. Often referred to as the residual voltage or the neutral point voltage

Contact us

ABB AB
Substation Automation Products
SE-721 59 Västerås, Sweden
Phone +46 (0) 21 32 50 00
Fax +46 (0) 21 14 69 18

www.abb.com/substationautomation

Power and productivity
for a better world™