ABB Power T&D Company Inc.
Relay Division
Coral Springs, FL
Allentown, PA

August, 1991
New Information
Mailed to: E, D, C/41-700C

Device Number: 24

Type MVH Microprocessor Volts Per Hertz Overexcitation Relay

Application

The MVH relay is an inverse time volts/hertz relay whose application is to protect generators and transformers from damaging overexcitation. Overvoltage, underfrequency, or a combination of the two can result in excessive flux density in the generator or transformer iron, producing heat that can reach damaging levels. Heating damage to the transformer or generator, if severe enough, can result in costly equipment outages.

Since the characteristic damage curves for various generator and transformer manufacturers differ, the protective relay has the capability to encompass a large number of settings and damage curves. The MVH, with its range of voltage settings and curve selections, can meet these requirements.

The MVH relay provides front panel switch selectable settings, enabling the user to select characteristics that best fit the equipment being protected. The microprocessor design provides automatic self-checking of the software and hardware, as well as indication for loss of dc battery voltage. The non-volatile memory provides retention of the microprocessor programs and trip indications.

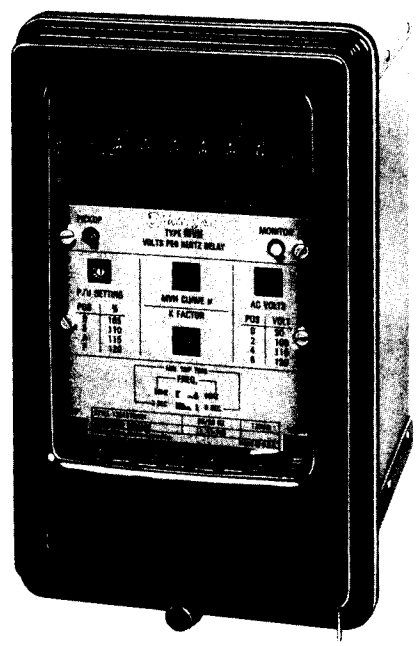

Specifications

Dimensions:
10 7/16" High x 6 3/8" Wide x 7 21/32" Deep (Standard FT-22 Case/refer to DB 41-075 for details)

Shipping Weight:
15.0 Lbs.

Power Supply:
48/125, or 250 Vdc

Frequency:
50 or 60 Hz, Selectable

Outputs:
- Trip Contacts—2 N.O. Contacts
- Alarm Contacts—1 N.O. and 1 N.C. Contact
- Transformer differential blocking—1 N.O. and 1 N.C. Contact

Standards:
- ANSI C37.90
- IEC255 Series

Environmental Temperature Range:
- Operate: −20° to +55°C
- Shortage: −40° to +70°C

Features

- Front panel selection of three separate inverse time curves and multiple time dial settings allow closer match of protection to the transformer or generator damage curve.
- Three phase voltage sensing with protection based on the highest value of volts per hertz.
- Monitoring circuit with automatic self-check of hardware and software, and loss of dc battery voltage.
- Linear rate reset feature enables relay to recognize repeated overexcitation events and adjust trip time accordingly.
- Magnetic target retains trip indication on loss of dc battery voltage.
- FT case construction provides unsurpassed in-service test and isolation capability.
- Transformer differential blocking feature may be used to block trip by transformer differential relays on overexcitation.
- Settings provided for nominal voltages of 90, 95, 100, 105, 110, 115, and 120 volts ac.
- Settings provided for above nominal voltages divided by $\sqrt{3}$
- Pickup adjustable from 105% to 120% volts/hertz in 1% steps.
- Selectable minimum trip time—3 second or 6 second.
- Front mounted, manual target reset.

Characteristics

Temperature range: −20° to +55°C

Frequency: 50 Hz or 60 Hz selected by a switch.

Operating Frequency Range: 12.5 Hz to 90 Hz (maximum V/Hz input of 150%).

AC Voltage Range:
90, 95, 100, 105, 110, 115, & 120V.

Voltage Input: Three two wire isolated ac inputs for maximum V/Hz sensing.

V/Hz Pickup Setting: From 105% to 120% in 1% steps with repeatability 0.5%.

V/Hz Pickup Accuracy: Using the PICKUP light as an indicator. 2% over the operating temperature range.

Dropout Ratio: 98% (approx.)

Inverse Time Characteristics: Three curve families selected by Curve #1, #2 or #3 and each family contains 10 curves selected by K factors from 0 to 9.

Operating Time Repeatability: ±5%. Testing of this value requires a very stable input source.

Alarm-1: 2 seconds ±10% for any V/Hz in excess of the pickup setting.

Alarm-2: One normally closed (N.C.) contact for an unsatisfactory self-check or loss of dc power supply.

Minimum Trip Timer: 3 or 6 seconds selectable by a front panel switch.

Reset Characteristics: Linear reset with a time constant of 204 seconds to complete reset. After trip, reset is immediate.

Trip Contacts: Two N.O. (normally open) contacts capable of making and carrying 30 amperes at 250 Vdc for 1 second.

Alarm Contact Rating: 0.25 amperes at 250 Vdc.

Trip Indicator: Magnetic Flip-flop to indicate trip current flow (the minimum trip current for indication is 0.5 amperes).

LED Indicators: Two, one for V/Hz pickup (PICKUP) and one for self-test/dc power (MONITOR).

Special Contact Output (HU): 1 from C (transfer) contact. Output indicates for all three phases are in excess of 120% V/Hz rating.

Block Diagram

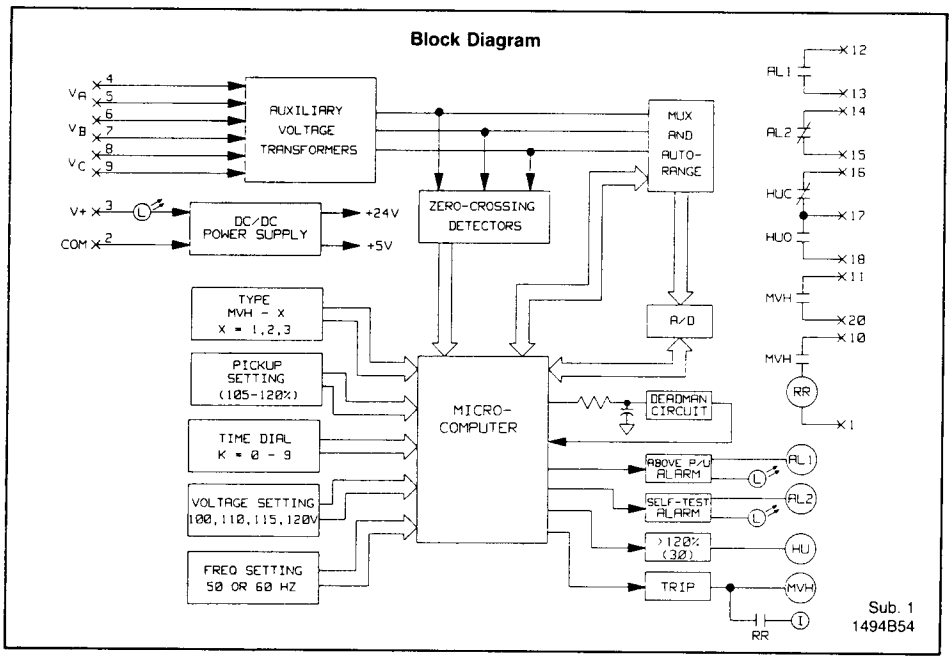

External Schematic

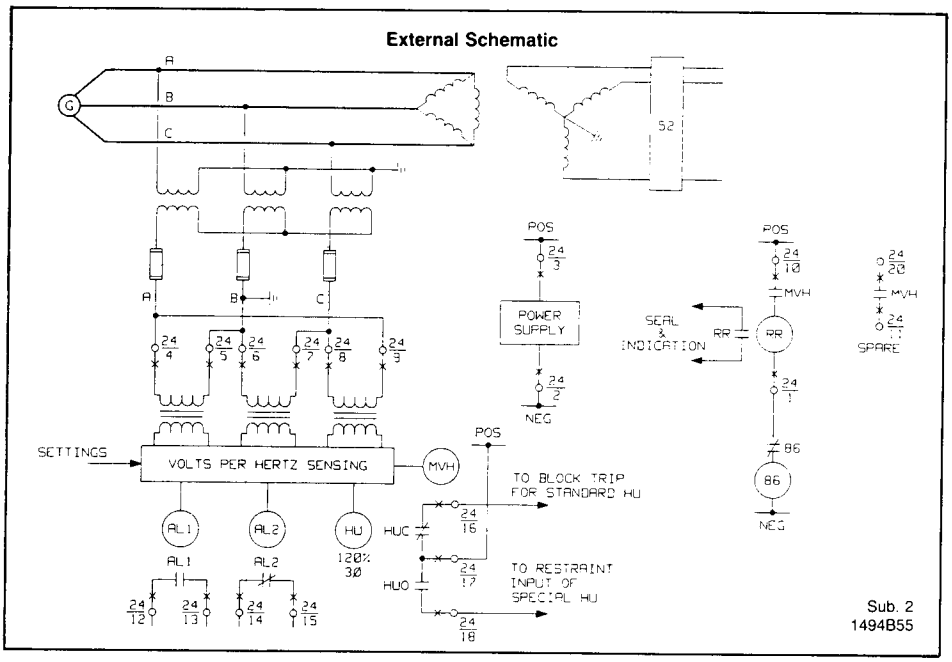

DC Power Supply: Separate styles for 48V, 125V, and 250V.

DC Power Drain: 0.15 amps for 48V. 0.037 amps for 125V.

AC Voltage Burden: 0.25 VA at 120 Vac and 60 Hz.

Theory of Operation

The MVH microprocessor based relay digitally integrates a three phase voltage input with respect to each half cycle in order to determine the ratio of voltage to frequency. The integration on each input is shown below in equation (1):

$$\int_{0}^{T/2} V \sin x \, dt = V/pf \qquad \text{(eq. 1)}$$

where f = I/T = frequency in Hz.

After 200 ms, the individual V/Hz computations are averaged and the largest of the three is compared to a pickup value. If it exceeds the pickup value it is input to an inverse time tripping algorithm. The tripping algorithm obeys equation (2):

$$t = \frac{K1 - X}{e^{C}} \text{ (minutes)} \qquad \text{(eq. 2)}$$

where t is the time to trip, X is the percentage of V/Hz ratio, and K1 and C are constants.

The digital integration performed on each phase is accomplished by sampling the waveform every 0.768 milliseconds. The zero crossing of the waveform marks the end of one integration and the start of the next. Three phase voltages A, B, C are input to the three transformers TX1, TX2 and TX3 respectively. These transformers are center tapped and provide a 4:1 step down voltage on the secondaries. The phase A secondary voltages are labeled PA+ and PA−. The secondary voltages of Phase B and C are labeled as PB+, PB− and PC+, PC− respectively. These signals are then input into the processor module. On the processor module, signal PA+ and PA− are input to separate zero crossing detectors. The output signals form the zero crossing circuits are labeled ZCA, ZCB and ZCC for phases A, B, and C respectively. Each zero crossing signal produces a logic 0 when its input is positive, and a logic 1 when its input is negative.

The processor module contains two identical custom linear integrated circuits, U7 and U8. These custom chips contain a 4 channel analog multiplexer and a programmable gain amplifier which is shown below in simplified form.

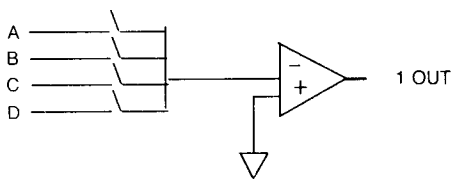

Only one input channel to the multiplexer can be selected at a time. This is controlled by S1 and S2 pins on the custom chip. The truth table for the S1, S2 pins and the selected channel are shown below:

S1	S2	Input
0	0	A
0	1	B
1	0	C
1	1	G

The gain of the programmable amplifier is controlled by the R1, R2 pins on the custom chip. The truth table for R1, R2 and the selected gain are shown below:

R1	R2	Gain
0	0	1.0
0	0	0.5
1	1	0.25

The programmable gain amplifier works on a negative current, i.e., the current flows out of the summing junction and to pins labeled A, B, C, or G. Signals PA− and PA+ are input to the channel A and B of the custom chip U8, signal PB− and PB+ are input to the C and G input of U8, and signals PC− and PC+ are input to the A and B inputs of custom chip U7.

When the microporcessor takes a voltage sample from the phase A input waveform, it must write to latch U11 so that signal U11-ZCAB and U11-S1 are a logic 1 and zero respectively. With U11-S1 a zero, the S1 input of U8 is 0. Hence only analog mux channels A or B will be selected. U11-ZCAB a logic 1 causes switch U2 to select the phase A zero crossing signal ZCA to be present at the S2 input of U8. This automatically forces only the negative signal to be chosen by the analog mux.

When the microprocessor takes a voltage sample from the phase B input, it must write to latch U11 so that U11-ZCAB and U11-S1 are a logic 0 and 1 respectively. Now only analog mux channels C or G may be chosen. Switch U2 now allows the phase B zero crossing signal ZCB to control input S2 on U8 allowing only negative polarity signal to be chosen.

The S1 input on U7 is grounded and the phase C zero crossing signal ZCC is fed directly to the S2 input. This allows only negative polarity signal from phase C to be chosen by the analog mux.

Once the microprocessor selects a phase it must then select the proper gain on the programmable amplifier. This is accomplished by writing to latch U11 and controlling the states of U11-R1 and U11-R2. These two signals feed directly into the R1 and R2 gain control inputs of the custom chips U7 and U8.

The custom chips are designed to produce a current output between 0 and 100 micro amperes proportional to the current input at a given gain.

Table below shows the relationship between current input, gain and current output.

Current Input	Gain	Current Output
0-100 uA	1	0-100 uA
100-200 uA	½	50-100 uA
200-400 uA	¼	50-100 uA

The microprocessor initializes the gain to unity. If the input current is greater than 100 microamperes the overrange output pin (OR) on the custom chip will go to a logic 1. Once the processor sees this, it will then switch to a gain of ½ and again examine the overrange output pin. If the overrange is still a logic 1, the processor will switch to a gain of ¼. The input signal range is such that no overrange will occur at a gain of ¼.

The phase A and B output current signal is labeled IOUTAB and the phase C output current is labeled IOUTC. Each phase output current has its own current to voltage resistor and trimpot for independent gain adjustment. The trimpot for phase C is labeled P1 and the trimpots for phase B and A are labeled P2 and P3 respectively.

The microprocessor switches the correct current output and current to voltage resistor and trimpot to buffer amplifier U1-A. The buffer amplifier U1-A feeds a sample-and-hold circuit made up of U3 and U1-B. The output of the sample-and-hold circuit feeds the A/D converter U6. The microprocessor reads the contents of the A/D converter on 8 of its I/O pins.

The microprocessor must know when each input signal zero crossing occurs. Signals INTA, INTB, and INTC on U5 provide the edge triggered zero crossing interrupts to the processor. The signals ZCCONA, ZCCONB and ZCCONC are under the processor control and keep the interrupt signals normally in the one state. Hence any zero crossing results in a high to low transition on the interrupt signal. This is done because the processor only responds to high to low transitions on its interrupt signals.

After the analog signals are sampled and pass through the auto-range stage and A/D converter, the microprocessor performs integration based on equation (1) and calculates the average value of V/Hz every 200 ms. The inverse time is based on equation (2). If the calculated value t is greater than the number stored in the accumulator, an increment of 200 (ms) will be added to the accumulator. This process will be repeated until the number in the accumulator is equal to or greater than the calculated value t and then a trip signal will be generated to energize the tripping relay.

The general equation (2) can be rewritten for the MVH curve 1, 2, and 3 as follows:

$$\text{Curve 1: } t = e^{\frac{(115 + K \times 2.5) - X}{4.8858}} \qquad \text{(eq. 3)}$$

$$\text{Curve 2: } t = e^{\frac{(113.5 + K \times 2.5) - X}{3.04}} \qquad \text{(eq. 4)}$$

$$\text{Curve 3: } t = e^{\frac{(108.75 + K \times 2.5) - X}{2.4429}} \qquad \text{(eq. 5)}$$

where X is the percentage of V/Hz ratio and K is the front panel dial setting from 0 to 9 and t is the time in minutes to trip.

One of the unique capabilities of the MVH relay is its linear rate reset characteristic. The reset time constant is 204 seconds. If any system disturbance causes the value of V/Hz to go above the pickup setting and then the value of V/Hz is reduced below the pickup to a normal level, it takes 204 seconds to completely reset the system. If the fault condition happens again before the system is completely reset, the time to trip will be faster and it depends on the number remaining in the accumulator. The design simulates the heat dissipation in a generator.

This relay is equipped with self-check and test features. A dead man circuit keeps track of the programming routine and the crystal timing. The voltage drop on the capacitor C8 should be maintained between 1.66V and 3.3V. If the programming routine is upset or the timing frequency becomes irregular, the microprocessor will be restarted and the Alarm-2 relay will drop out. The microprocessor also checks all bits in the read-only memory every 12 minutes. Any bit change in the memory will be indicated by turning off the Monitor LED and the Alarm-2 relay.

Further Information
List Prices: PL 41-020
Technical Data: TD 41-025
Instructions: IL 41-745A
Other Protective Relays:
Application Selector Guide, TD 41-016

Generator or Transformer Overexcitation

Volts per Hertz, Three Phase, 50/60 Hz (Device Number: 24)

Type	Contacts	Settings				Ratings Dc Volts	Internal Schematic	Style Number	Case Size
		Voltage Range Ac Volts	Frequency Range Hertz	Minimum Trip Time Seconds	Adj. Pickup Range % of V/Hz				
MVH	Dpst-cc	90-120	12.5-90	3.0/6.0	105-120	125	9644A52	1351D76A01	**FT-22**

ABB Power T&D Company Inc.
Relay Division
4300 Coral Ridge Drive
Coral Springs, FL 33065
954-752-6700

ABB Power T&D Company Inc.
Relay Division
7036 Snowdrift Road, Suite 2
Allentown, PA 18106
610-395-7333

Printed in U.S.A.

August, 1991