PR 460-2

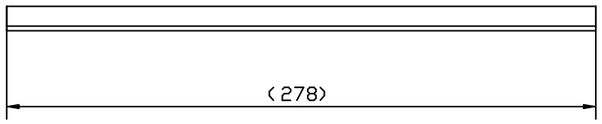

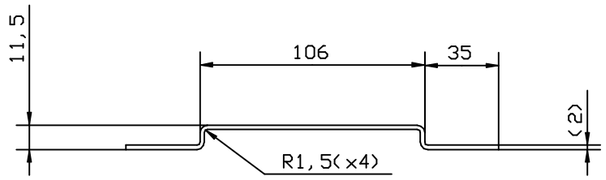

Utbredd

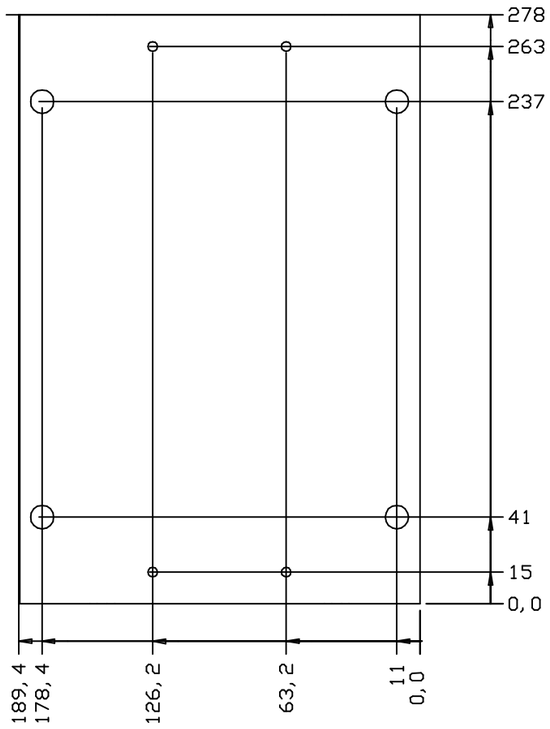

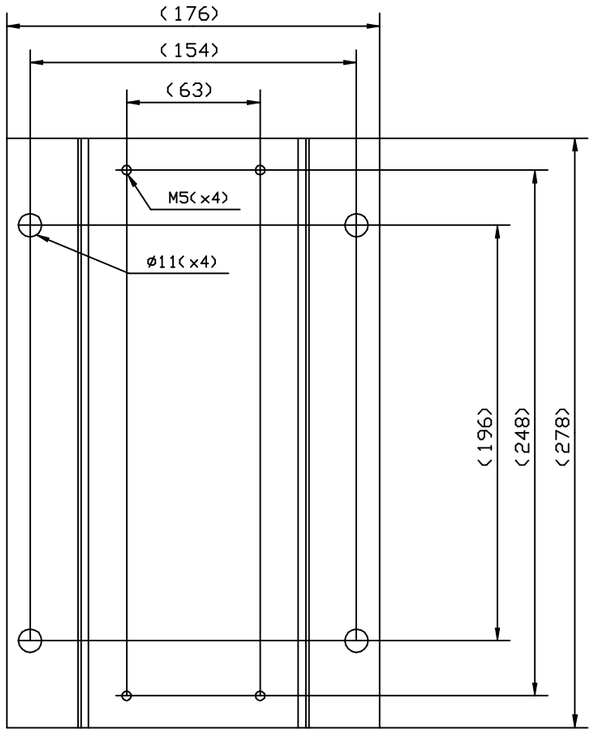

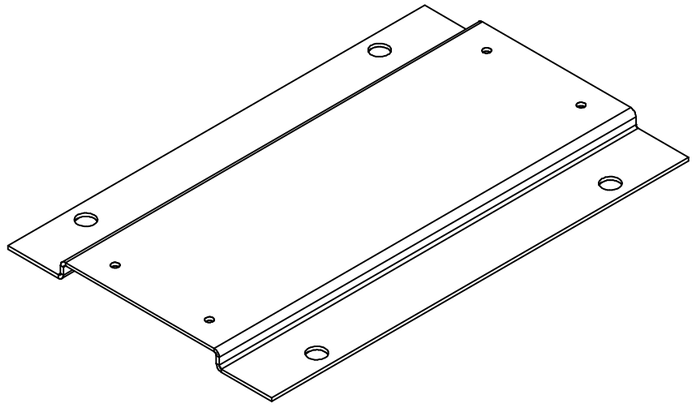

Inside bending radius 1,5

Invändig bockningsradie 1,5

General tolerances ISO 2768-m

Generella toleranser ISO 2768-m

278x189,4

Quantity	Item No.	Article No.	Material, type, etc	Dimensions	Name of item	Note
		1SFB 8-844	2 1151-90	T=2;	Sheet of steel Plåt av stål	

Prepared: M Ytterberg	Responsible department: SECRL/UK	Title: Adapter OKYM 400-AF400/460	
Approved: K Herold 001009	Take over department	Adapterplåt	Lang. 82
Revision: 1	Scale: 1:2	Document No. 2161 566-16	Cont. -
ABB Control		ISSUED	Sheet 1

Rev ind	Revision	Appd	Year	Week
1	Typbet. var PR 400-2	MY	01	14

We reserve all rights in this document and in the information contained therein. Reproduction, use or disclosure to third parties without express authority is strictly forbidden. © ABB Control