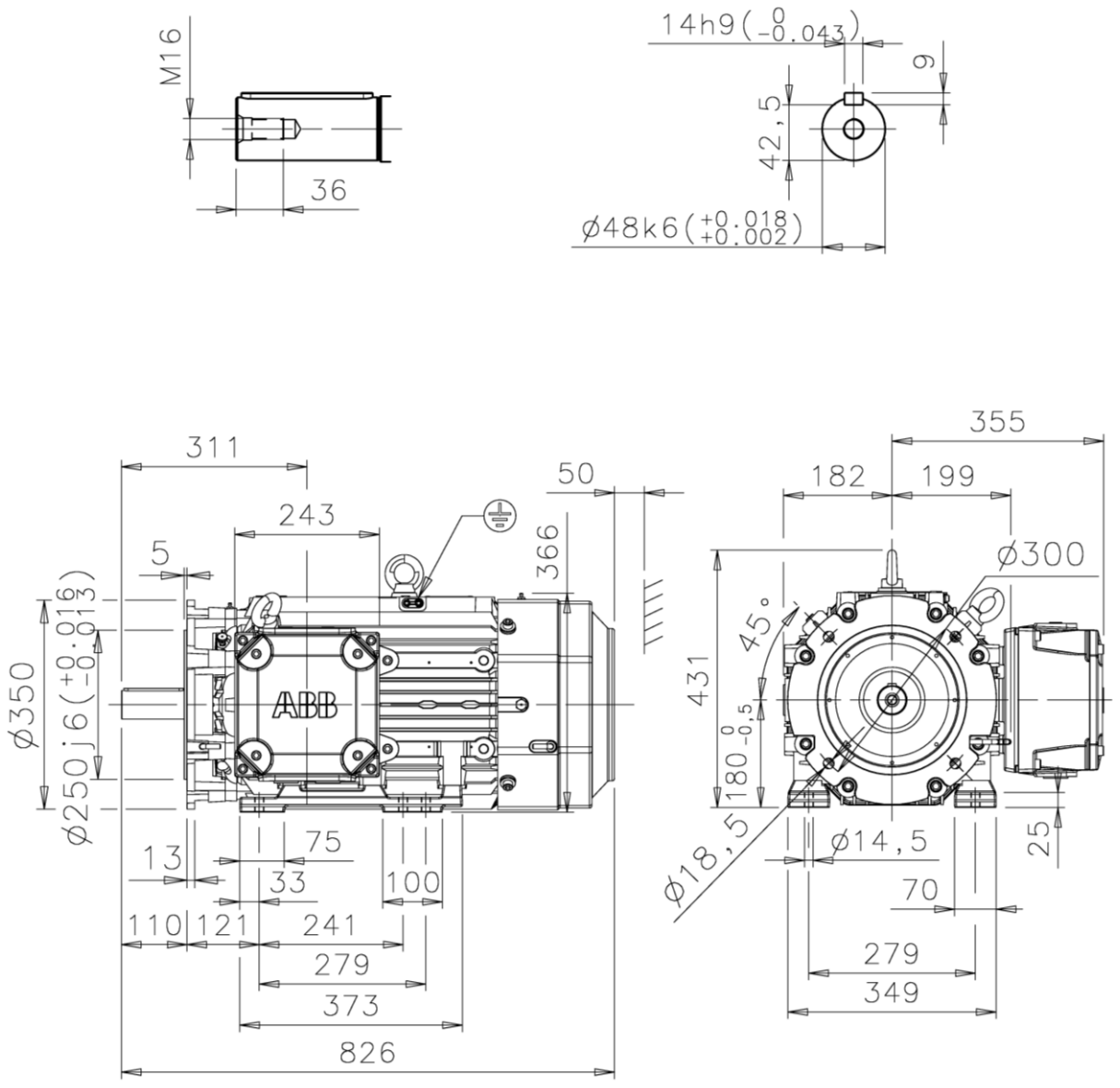

Additional information:

Dimension Print	Motor Type: M3JP (H) 180ML_2-12 B35, V36	Document No: 3GZF500218-46 B 13 JP 180 A
Description: STANDARD SQUIRREL CAGE MOTOR, TERMINAL BOX RHS		

Unit:	Motors and Generators	Issued by:	E.Kuntola	Replaces:
Date:	05.01.2012	Approved by:	J-P.Alanen	Replaced by:

ABB Oy	Customer Reference:	ABB