High impedance busbar differential protection

Edition 1

1 Introduction

The very large fault-MVA that can now be encountered in H. V. networks has to a great extent demanded the introduction of a special busbar protection. A busbar fault can then be cleared instantaneously (i.e. without any intentional time delay). This reduces the danger to personnel, damage of equipment and the possibility of network instability.

In the past, the relatively rare busbar faults were tripped by the 2nd stage remote-end distance protections. Generators and transformers connected to the busbars were tripped by their back-up protections. However, the fault-clearing times then become excessive, unacceptable to modern requirements. The tripping of circuit-breakers in adjacent stations may also cause unnecessary interruptions of supply. In addition, the almost simultaneous operation of a number of circuit-breakers in the network can cause some of these to be severely damaged, due to what is called developing-faults.

For a H. V. busbar, where fault-currents may be fed through a number of feeders, some form of differential protection would be the most suitable solution, particularly if the protection shall operate rapidly for both phase-phase and phase-earth faults.

With busbar protections it is necessary to impose very stringent requirements on stability. Under no circumstances can tripping be tolerated for a fault outside the protected zone, for example out on a line. During such conditions the faulty line will carry the sum of the currents fed into the busbars through all the other feeders. With a nearby line-fault, the fault-current can reach a value of 50 to 100 times the normal rating of the line. The sound feeders, on the other hand, will have much smaller values of fault-current.

The current transformers of the faulty feeder may, therefore, saturate whereas the other C. T. s maintain their correct ratio. The secondary currents will then no longer balance in the plain circulating-current differential protection and undue tripping may occur. However, with the below described differential protection, of the so called high-impedance type, it is possible to prevent completely undue tripping on all types of external faults. By including a check-feature also, such that tripping can take place only when two independent contacts are closing simultaneously, an additional guarantee is introduced (see section 7).

4.72 400 000 ®nyt x

Bl. 723 n-1

The outstanding features of this protection are:

Complete stability against all types of through-faults.
Low fault-setting.
Short operating time:

about 30 ms for the main protection (at 2 x the setting).

Simple relay scheme for phase- and earth-fault protection.
C. T.s of standard construction are normally used.

Requirements:

The C. T.s must all have the same turns ratio.
One C. T. core per phase should be reserved for the busbar protection only.
The C. T. knee-point voltage must satisfy the requirements of section 5.
The secondary leads should be as short as possible.

2 Basic principles

In figure 1, the basic diagram is shown for a differential protection of a busbar with four feeders. The C. T.s are all assumed to have the same turns ratio, and the D.C. resistance of the secondary winding plus the lead resistance of the pilot-wires to the connection points X and Y, are denoted by R_2. The broken lines X and Y are of no resistance and represent the common connection points in the nearest terminal, or marshalling box. The resistance R_2 may, of course, vary from one circuit to another. The relay-setting resistance R_r is very large compared with the coil impedance. For the time being, the effect of the voltage limiting resistor R_s is neglected.

With an external fault on line L_1, the primary fault current I_k is fed from the lines L_2, L_3 etc. If none of the C. T.s saturate, the currents fed towards and away from X will almost balance and the relay current i_r becomes practically zero. However, as mentioned above, some form of saturation may occur owing to the D. C. component of the fault-current, or owing to some possible remanence in the C. T. cores. A spill current through the relay circuit may, therefore, be obtained, but this can easily be reduced to a negligible value by adjusting the relay-setting resistor R_r.

3 Stability conditions on external faults (ref. fig. 1)

The setting of the differential relay is determined only from stability considerations on external faults. It is necessary, therefore, to consider the worst possible case, namely that the C. T. of the faulty feeder (L_1) fully saturates whereas the other C. T.s maintain their correct ratio. The maximum secondary fault-current i_k is produced by the non-saturated C. T.s and is equal to the primary fault current divided by the rated turns ratio. As seen from the secondary side, the impedance of the saturated C. T. is basically zero and the current only encounters the D.C. resistance R_2.

The resistance R_r for the relay circuit is always very much larger than R_2. Therefore, i_r can be neglected in comparison to i_k.

The voltage across the secondary circuit of L_1 and also across the relay circuit must, therefore, be equal to $i_k R_2$.

Let:

i_{r1} = the particular current setting of the differential relay.

U_{r1} = the corresponding voltage setting of the relay circuit.

$= i_{r1} R_r$

i_{k1} = the <u>maximum</u> secondary fault current on external faults.

The condition for complete stability during external faults thus becomes:

$$U_{r1} \geq i_{k1} R_2 \text{ or } i_{r1} R_r \geq i_{k1} R_2$$

$$\text{i.e.} \quad R_r \geq \frac{i_{k1}}{i_{r1}} R_2$$

The above condition requires in fact only that U_{r1}, the relay operating voltage, shall be higher than a certain fixed minimum value. Hence, i_{r1} may be chosen very small, limited only by the inherent characteristics of the relay which states that the coil reactance should be small in relation to R_r.

If for example: i_{k1} = 100A, i_{r1} = 0.1 A and R_2 = 1 ohm, then R_r must be chosen equal to 1000 ohm. The relay circuit, therefore, represents a very high resistance and this has introduced the name "High Impedance Differential Protection".

Since it has been assumed above that the C.T.s of the sound feeders are ideal, i_{k1} should actually include also the D.C. component of the fault current. However, the assumption regarding C.T. saturation is exaggerated and too pessimistic. Full stability will, therefore, be obtained even if only the A.C. component of the fault current is taken into consideration.

The values for i_{k1} and R_2 may be found to differ appreciably between the various secondary branches. The operating voltage, U_{r1}, must, therefore, be determined with respect to the maximum value that can be found for the product $i_{k1} R_2$. For the branch (or branches) where i_{k1} is large, it should be aimed to have the least possible pilot-wire lead resistance, by selecting the most suitable position for the common connection points X and Y.

Regarding pilot-wires, from outdoor switchyards, it should be noted that it is common practice to lay all the metering, control and other relaying cables, straight from the marshalling box of each line to an indoor terminal-box. The common points X and Y will, therefore, normally be found in the indoor terminal box. From this box leads will also be drawn to the relay control board. Since the relay circuit always represents a very high impedance, the actual distance from the relay to the points X and Y, is of no practical importance. If possible, therefore, the points X and Y should always be situated at a suitable place in the switchyard.

4 Operation on internal faults

With a fault on the busbar (see fig. 2), currents are fed into the fault on a number of feeders (L1 - L3) and with such a direction that a voltage U_r will be impressed across the relay circuit. The primary fault-current required for operation of the protection becomes:

$$I_{r1} = q \ (i_{r1} + n \cdot i_m + i_s)$$

where q = CT turns ratio

n = total No. of C.T.s per phase, inclusive the C.T.s of feeders temporarily disconnected.

i_m = C.T. secondary magnetising current at U_{r1} volts

i_s = current drawn by the voltage-limiting resistor R_s at U_{r1} volts

With standard C.T.s, the primary operating current I_{r1}, is normally much less than the C.T. rating. In some case a current setting of 10-20% of the CT rating, can be obtained.

5 Current transformer requirements

A separate core on the C.T.s should be reserved for only the busbar protection. The turns ratio should always be the same for all feeders, to avoid the use of ratio correction C.T.s.

The knee-point voltage should be at least two times the operating voltage U_{r1}, so that decisive operation can be ensured on internal faults. This requirement is normally fulfilled with standard C.T.s.

If the C.T. secondary leads are of appreciable length, as may be the case with outdoor switchyards, a secondary rating of 1 A (or 2 A) should be chosen in order to reduce the unfavourable effect of the lead resistance on the relay operating voltage, U_{r1}.

6 Typical schematic diagram and speed of operation

The diagram 7451 018 shows the connections of a single busbar, three-phase, differential scheme suitable for the protection against phase-phase and, in the case of effectively earthed systems, also against phase-earth faults.

With an internal fault, the differential relays and the voltage check relays will operate within about 30 ms, when the fault-current is 2 times the setting. To trip all the feeders connected to the busbars, a self-reset auxiliary relay type RRMH 2, with 8-make contacts and hand-reset flag, is normally provided. The speed of operation of this auxiliary relay is about 20 ms, and the total relaying time of the protection, at 2x the setting, is therefore 50 ms.

In some cases, when the fault-MVA is very large and when system instability can occur, it may be requested to increase the speed of operation. A special high speed tripping relay-unit, with an operating time of 2.5 ms, can then be provided. The total relaying time is then reduced from 50 ms to 33 ms.

The high-speed tripping relay-unit can be arranged as: self-reset, hand-reset or electrically reset. Further data will be supplied on request.

7 Voltage check feature

An open-circuit in the C.T. secondary wiring will, of course, give rise to a relay spill-current and thereby introduce a possibility of mal-operation. This may take place under normal conditions, depending on the actual load current and the fault-setting, but in any case under through-fault conditions.

In the event of such an open-circuit, mal-operation due to the normal load current may be prevented by the addition of a Check Feature. For example, with a phase-phase fault, the check feature is obtained by using a three-phase instantaneous undervoltage relay (item 8 in diagram 7451 018). The contacts of this relay will make when anyone of the phase-phase voltages has dropped to between 60-75%. Similarly, on an earth-fault, the check feature is obtained from the sensitive neutral-point voltage relay (4c). It is recommended that one contact on each of the voltage-check relays should be used for initiating an alarm.

8 Alarm feature (ref. diagram 7451 018)

For the continuous supervision of the secondary circuit, a highly sensitive alarm relay (4b) may be paralleled with each of the differential relays. The setting of the alarm relay can be made very low, only a few percent of the C.T. rating.

9 Voltage limiting resistor

On a busbar fault with large fault-currents, all the C.T.s will be heavily saturated. Although the secondary r.m.s. output voltages will be small owing to the saturation, high transient voltage peaks are known to be produced every time the primary current passes through its zero position. To limit these transients to an acceptable level, about 2 kV peak, voltage limiting resistors are used. These are subjected to high voltages only during the fault-clearance time, i.e., relay plus breaker opening time.

10 Double busbar arrangements

The typical schematic 7451 019 shows two busbars, A and B, and the bus-coupler circuit-breaker (4) which is normally closed. As an example, and for the sake of simplicity, only two feeders are shown, L_1 and L_2. By using the bus-selector switches, A5 and B5, each feeder can be connected to either the A or B busbar. Such a changeover always requires the bus-coupler to be closed.

Each main busbar has its own set of differential protection relays, A 7 and B 7, respectively, connected to their associated secondary busbars A' and B'. These secondary busbars may be compared with the previously mentioned common connection points.

The C.T.s of the bus-coupler are always rigidly connected to both A' or B'. In addition, busbar A' is for example always connected to the C.T.s of the feeders that for the moment may be switched to the main busbar A. Under normal service conditions, each differential protection represents a balanced protective system.

If for example the line L_1 is switched from B to A, its C.T.s must also be switched from B' to A'. This is achieved by the changeover relays A6 and B6, operated from auxiliary contacts on A5 and B5.

At the instant when the selector-switch A5:1 closes, the coil on the left-hand side of A6:1 is energized. This relay will, therefore, close the circuit from the L_1 C.T.s to A' and the circuit from A10 to the trip-coil of 3:1.

Line L_1 is now connected to both the A and B busbars and the two protections are parallelled, representing a single-zone arrangement. This situation will be maintained until the switch B5:1 is opened, i.e. the line L_1 disconnected from the B busbar. The coil at the right-hand side of the relay B6:1 will then be energized. This relay will break the circuit from the L_1 C.T.s to B' and the circuit from B10 to the trip coil of 3:1. The two differential protections are thereby made independent of each other and now represent a two-zone arrangement.

Each differential protection has its own undervoltage relay, A9 and B9 respectively, and its own neutral-point relay, A7c and B7c respectively, fed from the associated busbar V.T.s.

In the event of a fault between the bus-coupler circuit-breaker (4) and its C.T.s (1), only the protection for the A busbar will operate and trip the breakers (4) and (3:2). The B busbar protection will not operate because the fault appears to be external to the B-zone, Fault-current may therefore still be fed from the B busbar, via the line L_1. After a certain time-lag, final fault-clearance will take place due to tripping of circuit-breakers in the adjacent stations feeding the B busbar.

If, under such fault conditions, it is required that also the B-zone protection shall operate, a definite-time-lag relay (14), with a time scale 0.05-0.5 sec. should be included and connected as shown by the broken line. As long as the fault persists, the voltage-check relays (B9, or B7c) and the A-zone protection differential relays will all remain operated. The time-lag relay (14) can therefore be set to trip the B-zone (B10 relay) after a time-lag of for example 0.2-0.3 sec., depending on the opening-time of the A-zone circuit-breakers.

Another method for obtaining tripping of both the A- and B-zones, would be to use the principle with "overlapping" of C.T.s, i.e. separate three-phase sets of C.T.s are placed on either side of the bus-coupler and arranged such that each protective zone extends a short distance beyond the bus-coupler.

ASEA

Ort: Västerås
Tj.st.: Fao Dat.: 27.3.63
Tj.st.ch.:
Kontr.: T. Forford Kil.: Std.gr.:

Busbar differential protection

Fao 4351E

Ändr.: a Blad:
Reg.: 7451 Forts. bl.:
Inköp: Pkl:
Ref.:

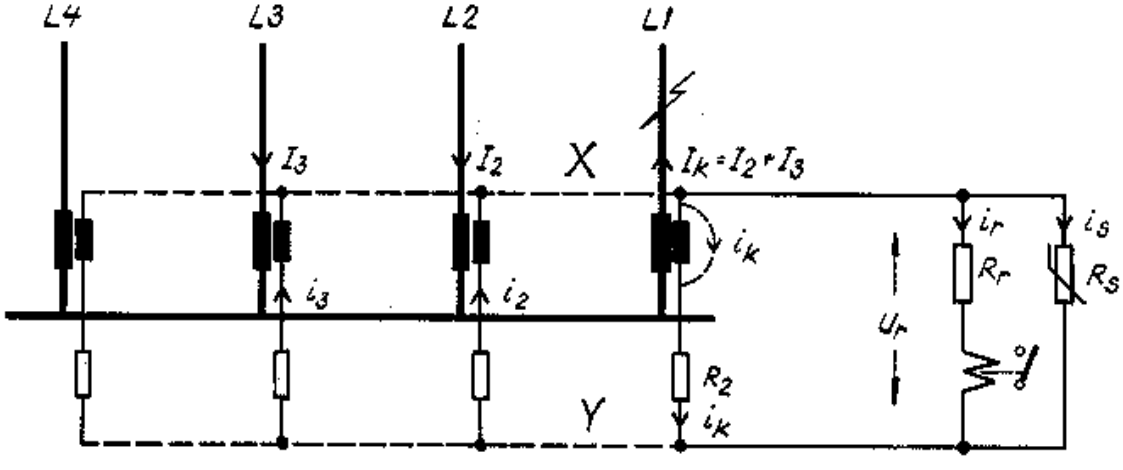

Fig. 1

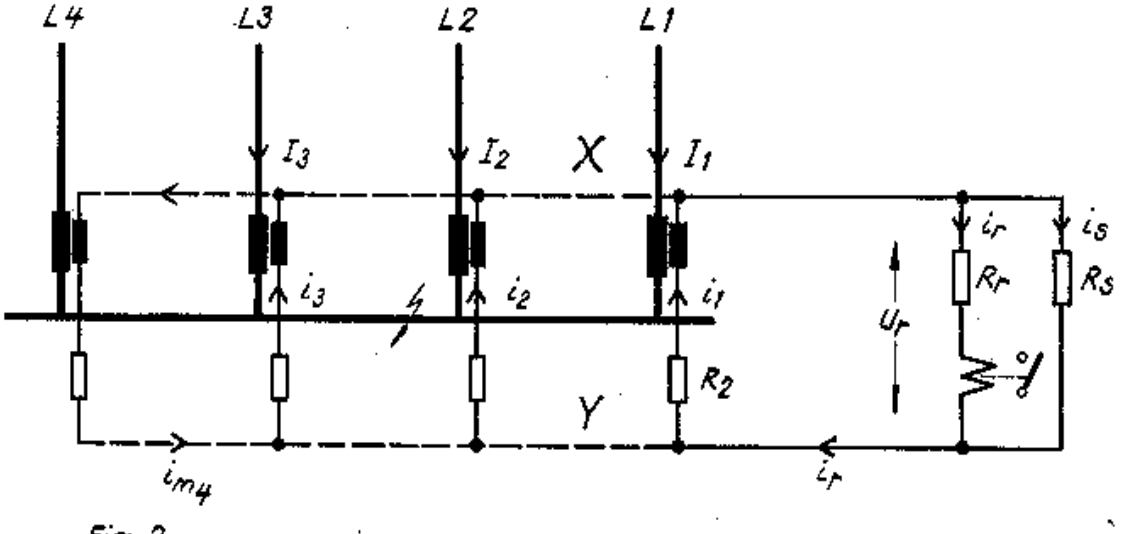

Fig. 2

Not	Ändring	Datum	Av
a	Eng. text, X & Y entered	10.11.64	TF

2000 070 tuschvär (A4)

Nr	Ändring	Datum	Av

ASEA

Ort: Västerås

Utf. FKAC Datum 3.11.64

Granskad: MBl

Godkänd: T. Ferbrand

Single-Zone Busbar Differential Protection

Typical Schematic

7451 018E

Bas: 7451

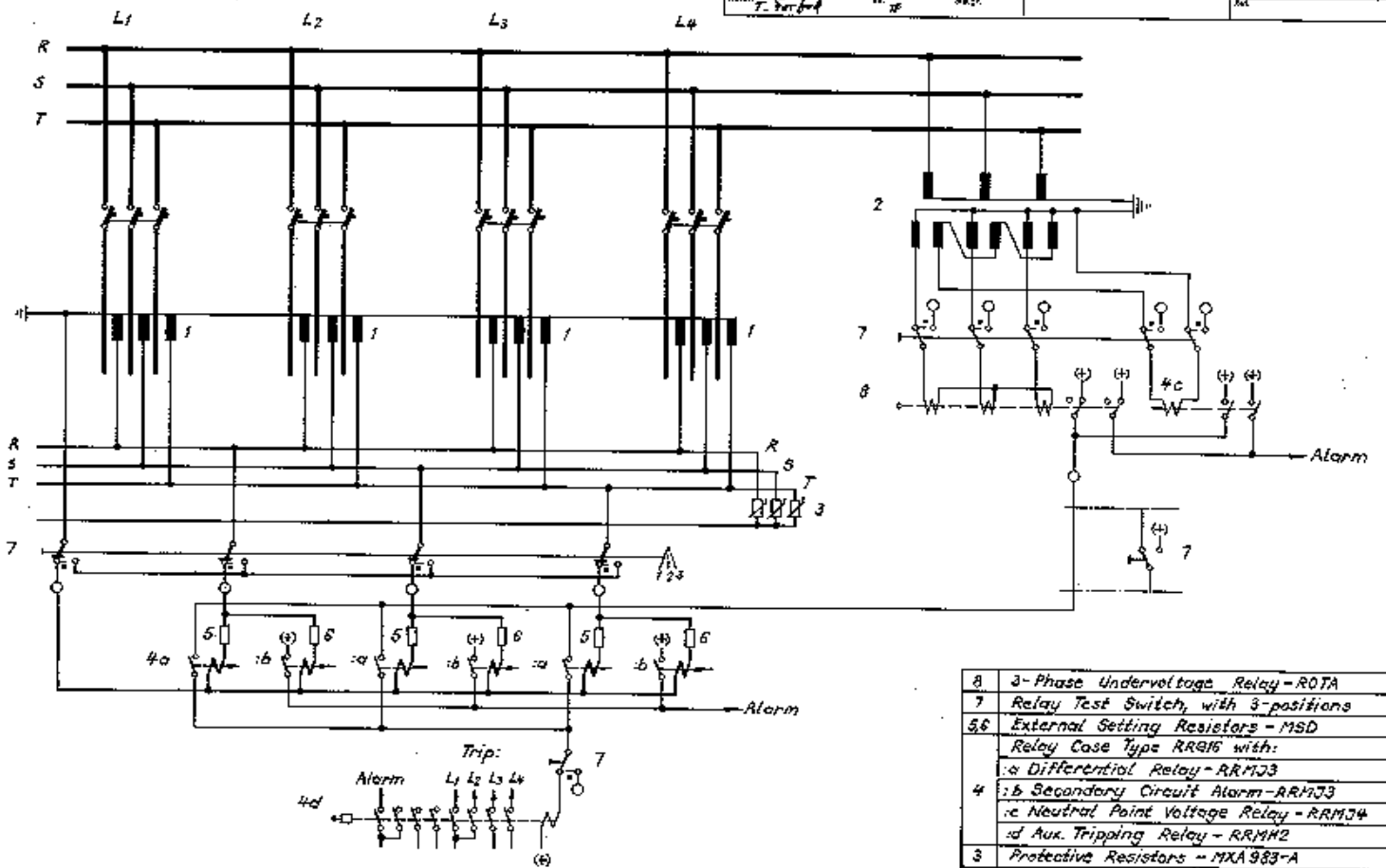

No.	Item
8	3-Phase Undervoltage Relay - ROTA
7	Relay Test Switch, with 3-positions
5,6	External Setting Resistors - MSD
4	Relay Case Type RRQ16 with:
	:a Differential Relay - RRMJ3
	:b Secondary Circuit Alarm - RRMJ3
	:c Neutral Point Voltage Relay - RRMJ4
	:d Aux. Tripping Relay - RRMH2
3	Protective Resistors - MXA 983-A
2	Voltage Transformer
1	Current Transformer

7451 018E

No	Ändring	Datum	Av
0	Item no. 15 entered, Drawing no. altered from 7451119	10/11 -64	TF

ASEA

Differential protection for double busbar system

7451 019E

Foo 7.3.63

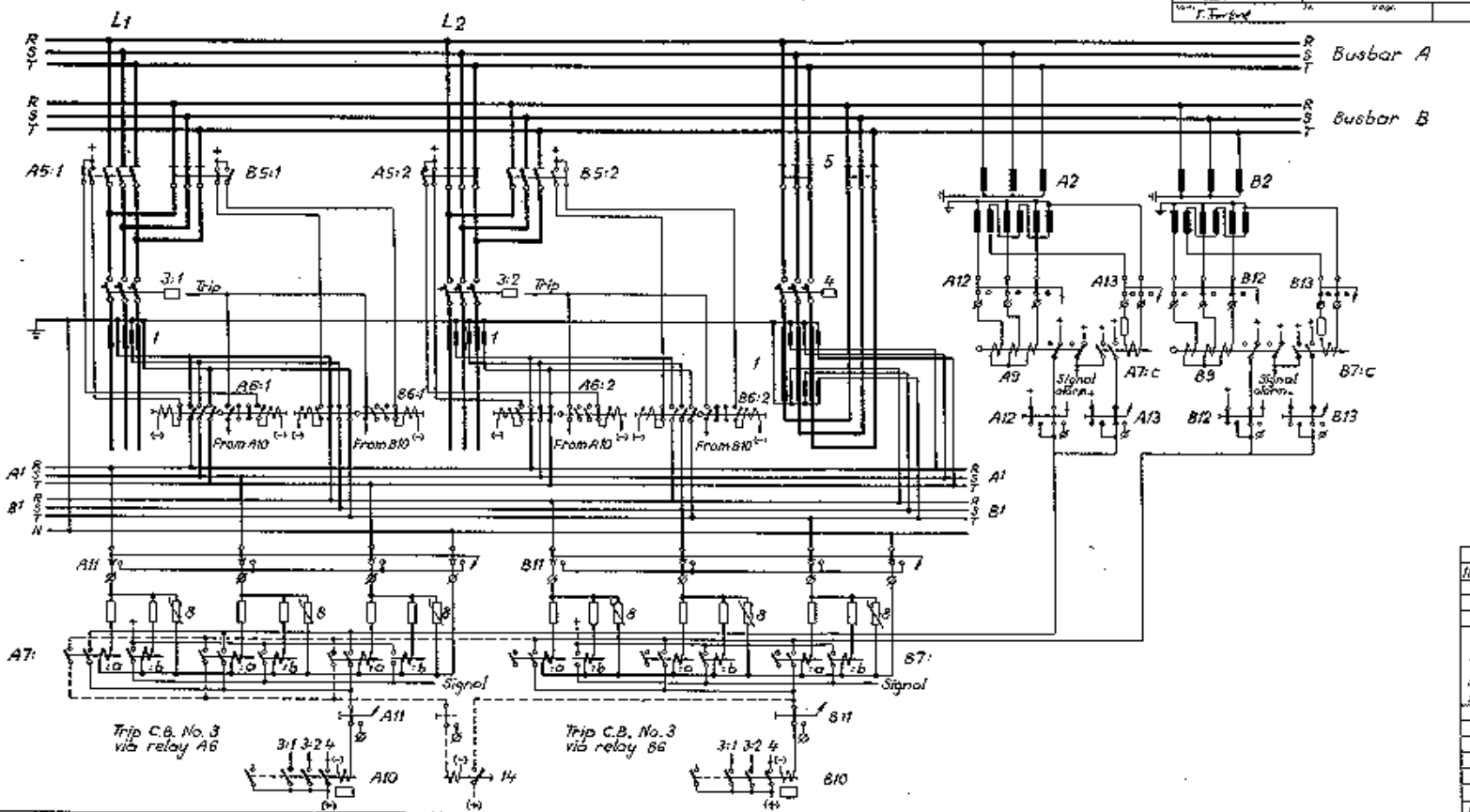

Note: Prefixes A and B denote devices associated with busbar A and B respectively

No.	Device
14	Definite-time-relay RRK210-05-0.5s
11-13	Relay test switches type 08A
10	Tripping relay type RMA16
9	Undervoltage relay type ROTA
8	Protective resistors type MYRA
7	Relay casing type RBG16 with:
:a	Diff. current relays type RRM14 with stabilizing resistors
:b	Supervisory relays type RRM13
:c	Neutral point volt. relays RRM14
6	Change-over relays type RRM182
5	Isolating switches
4	Bus-coupler
3	Circuit breakers
2	Voltage transformers
1	Current transformers

7451 019E