Wall bushings, type GOEL

Installation and maintenance guide

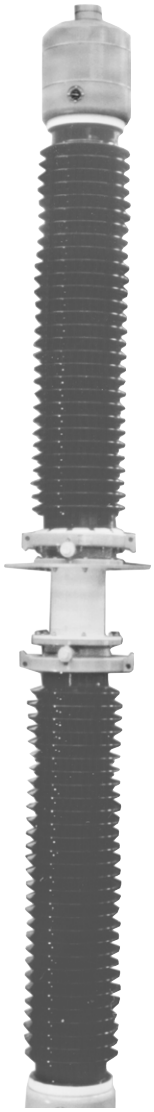

Safety information

Keep this instruction available to those responsible for the installation, maintenance, and operation of the bushing.

The installation, operation, and maintenance of a bushing present numerous potential unsafe conditions, including, but not limited to, the following:

- High pressures
- Lethal voltages
- Moving machinery
- Heavy components
- Slip, stumble or fall

Specialised procedures and instructions are required and must be adhered to when working on such apparatus. Failure to follow the instructions could result in severe personal injury, death, and/or product or property damage.

Additionally, all applicable safety procedures such as regional or local safety rules and regulations, safe working practices, and good judgement must be used by the personnel when installing, operating, maintaining and/or disposing such equipment.

Safety, as defined in this instruction, involves two conditions:

1. Personal injury or death.
2. Product or property damage (includes damage to the bushing or other property, and reduced bushing life).

Safety notations are intended to alert personnel of possible personal injury, death or property damage. They have been inserted in the instructional text prior to the step in which the condition is cited.

The safety conditions are headed by one of the three hazard intensity levels which are defined as follows:

DANGER

Immediate hazard which will result in severe personal injury, death, or property damage.

WARNING

Hazard or unsafe practice which could result in severe personal injury, death, or property damage.

CAUTION: *Hazard or unsafe practice which could result in minor personal injury, or property damage.*

Contents

1 Description

1.1 Design

The design principle is shown in Figs. 1a-f.

The bushing is built up around a centre tube on which the condenser body is wound. The condenser body is wound from insulating paper of the same type as is used for high-voltage cables. Bushings for higher voltages are wound from paper strips in a manner similar to that used for cables.The foils are located so that the best possible combination of external flashover and internal puncture strength is achieved.

A set of concentric tubes are prestressed and serve as springs which hold the main bushing components, such as top housing, outdoor and indoor insulators and mounting flange, together and provide adequate pressure on the gaskets in all expected temperature and load conditions. Sealings are accomplished by oil-resistant rubber gaskets in grooves.

The annular space formed between the tubes makes an efficient cooling duct for dissipation of the heat, thus improving the current-carrying capacity and thermal stability of the bushing.

The bushing is designed to be mounted at an angle not exceeding 75° from the vertical. A higher inclination can be obtained on request.

The top housing is made of aluminium and has expansion space for the oil, sufficient for temperature variations in the bushing between -40° and +80 °C. Variations in the length of the centre tube and the top housing are compensated by a flexible connection inside the top housing. For GOEL 250 to 900 the top housings are equipped with two oil level gauges of prisma type. For GOEL 950 and larger, the top housings are equipped with a magnetic oil level indicator.

The mounting flange is an aluminium alloy casting, or is a welded aluminium or steel design according to the customer specification. On the flange there is a test tap. This tap is automatically earthed by the cover cap when the tap is not connected to external test or measuring circuits. The flange and the other metal parts on the outside of the bushing are protected by a two-component grey-blue paint.

For GOEL 950 and larger, the porcelain insulators are fastened with additional clamps to the flange.

The nameplate is placed on the mounting flange.

The rated current is defined according to IEC publication 137. It is valid only when the centre tube is used as conductor. For flexible lead applications the permissible current will be lower.

Bushings for higher voltages can be equipped with a spring device connected to the top end of the conductor tube and to the top of the porcelain insulator.

Fig. 1a. Design principle.

1) Terminal stud
2) End nut
3) Sealing plug M8, 2522 731-A,
   or M16, 2522 731-B
4) Flexible connection
5) Top housing outdoor
6) Oil level gauge complete with gasket and screws
   Prism type, 2744 322-A
   Magnetic type, 2744 322-B
7) Pre stressed tubes
8) Insulation oil
9) Porcelain insulator outdoor
10) Condenser body
11) Test tap, 2769 522-T
12) Mounting flange
13) Porcelain insulator indoor
14) Top housing indoor

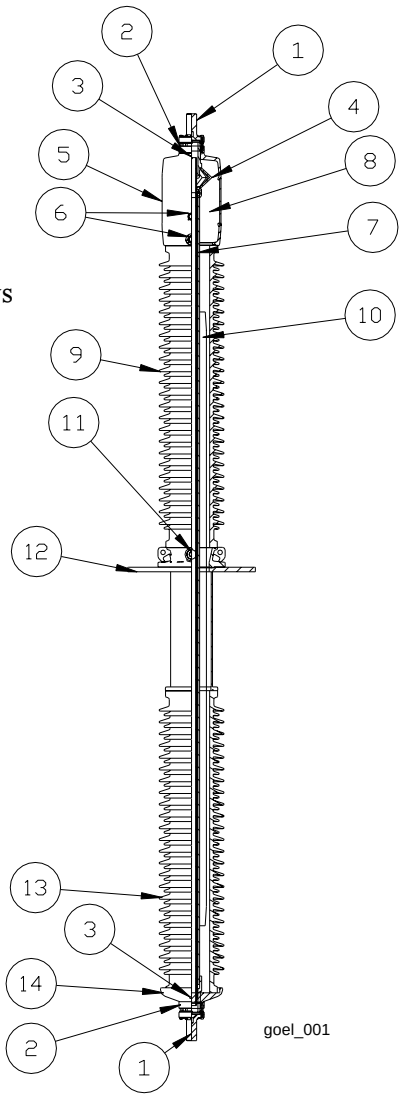

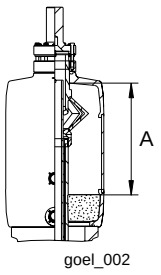

Fig. 1b. Examples of different flange designs.

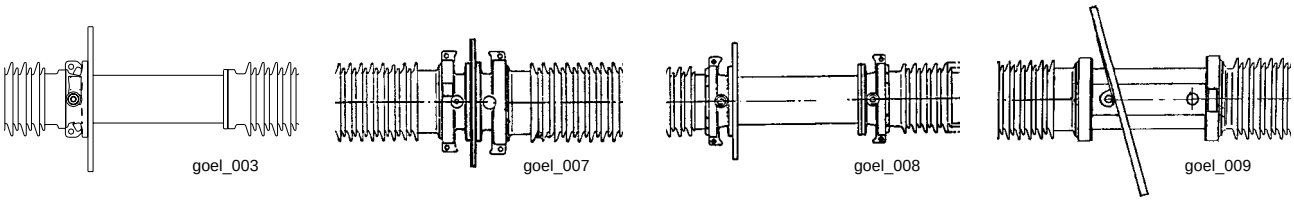

Fig. 1c. Examples of different top housing indoor design.

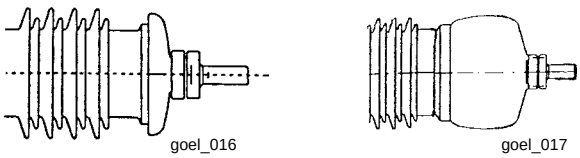

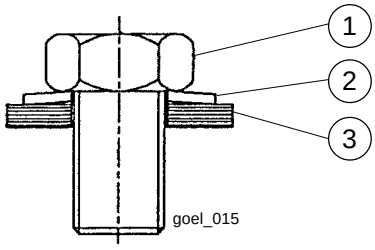

Fig. 1d. Sealing plug, 2522 731-B.

1) Bolt, 2121 2033-592
2) Gasket, 2152 045-513
3) Conical spring washer, 2154 725-7

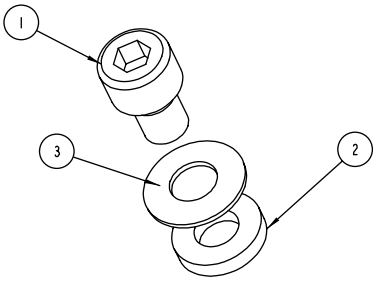

Fig. 1e. Previous design of sealing plug, 2522 731-A.

1) Hexagon socket screw, 2121 738-4
2) Gasket, 2152 899-132
3) Conical spring washer, 2154 4004-3

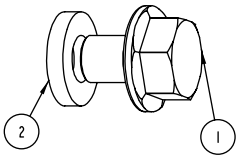

Fig. 1f. New design of sealing plug, 2522 731-A.

1) Bolt with flange DIN 6921, 2121 738-18
2) Gasket, 2152 899-132

1.1.1 Shed form

The shed form for all GOEL bushings is of the anti-fog type with alternating long and short sheds. For each pair of sheds the ratio between nominal creepage distance and the axial length is 3.43 and the ratio between protected and nominal creepage distance is 0.40.

For special customer demands regarding the creepage distance, other shed forms may be used.

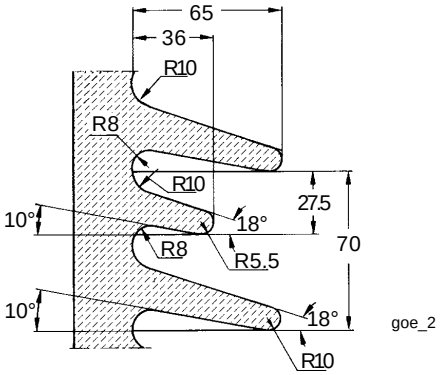

Fig. 2. Shed form.

1.1.2 Test tap

The GOEL bushings are equipped with a test tap connected to the outer layer of the condenser body, according to Fig. 3, which can be used for checking of the bushing insulation by capacitance and dissipation factor measurements. The tap is normally earthed by the cover. A terminal box, 2769 522-C, is available for permanent connection to measuring circuits, see Fig. 4. The test voltage of the tap is 20 kV, 50 Hz for one minute. Max. service voltage is 6 kV.

In connection with an external capacitance the test tap can be used as a voltage tap. The test tap has dimensions according to IEEE Potential tap type A.

In order to improve the voltage withstand capability of the test tap, the air side volume can be filled with oil via the sealing plug, 5. Approx. 10 % of the oil volume shall be removed after filling in order to maintain an acceptable working pressure at all possible temperatures.

Fig. 3. Test tap, 2769 522-T, and test tap cover, 2769 522-M.

1. Cover, 2749 515-2
2. Cylindrical head screw, 2121 2459-220
3. Earthing spring, 9580 148-1
4. Gasket (O-ring) 64.5 x 3
5. Sealing plug, 2522 731-A
6. Bushing, 2769 522-N
7. Press screw, 2129 713-3
8. Disc spring, 2195 703-1
9. Gasket (O-ring) 24.2 x 3
10. Cable
11. Stud, 2769 517-6
12. Sealing washer 4,5 x 7
13. Stud, 2769 517-7

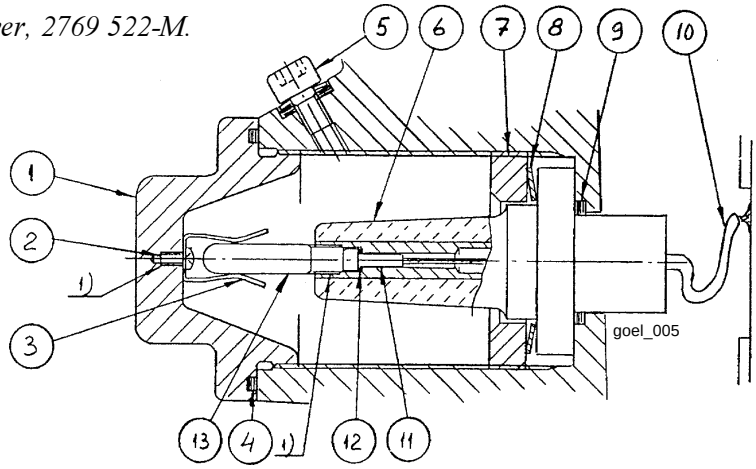

1) Locking liquid 1269 0014-410 (Loctite 242)

Test voltage 1 min., 50 Hz, 20 kV
Max service voltage 6 kV

Fig. 4. Terminal box for permanent connection to measuring circuits, 2769 522-C.

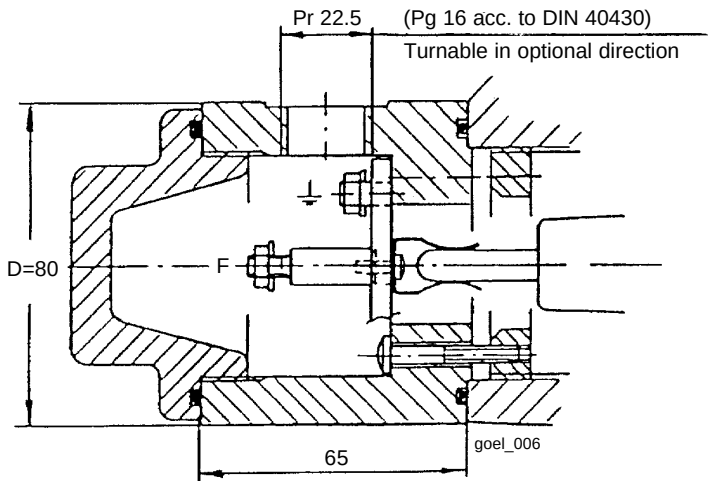

1.2 Operating conditions

The table below show the standard technical specifications for the GOEL Air - Air bushings. For conditions exceeding the below values, please contact ABB Components.

Common specifications:

Application:	Wall bushing
Classification:	Oil impregnated paper, capacitance graded, outdoor-immersed bushing
Ambient temperature:	+40 to -40 °C, minimum value as per temperature class 2 of IEC 137
Altitude of site:	< 1 000 m
Level of rain and humidity:	1-2 mm rain/min horizontally and vertically, as per IEC 60-1
Pollution level:	According to specified creepage distance and IEC 815[1]
Markings:	Conforming to IEC/ IEEE

[1] IEC 815 "Guide for the selection of insulators in respect of polluted conditions".

1.3 Mechanical loading

The bushings are designed for the following cantilever loads applied to the midpoint of the top end terminal, perpendicularly to the bushing axis. In axial direction the GOEL bushing can withstand 10 kN continuously. The maximum torque on the outer terminal stud is 250 Nm. The bushing mounting angle can be 0-75° from vertical.

Table 1. Mechanical loading

Bushing	**Type test load 1 minute (N)**	**Max. service load (N) 0-30 °**	**30-75 °**
All types	5000	2500	1500

1.4 Spare parts

In case of major damage to the bushing we recommend that it is sent back to ABB Components for possible repair and re-testing. Certain parts (Figs. 1, 3, 4, 9 and 10), which may be damaged or lost during transport or installation, can be ordered from ABB Components.

2 Installation

2.1 Tools

- Soft slings
- Lifting gear, 9760 668-A, see fig. 5
- Shackles, for hole Ø 28 mm, for connection of soft slings to the bushing flange
- Torque wrench key for hexagon head screws, head width 16 mm (M10) and 13 mm (M8)
- Tackle for mounting the bushing at a certain angle
- Soft bedding
- Protective boards to tie around the insulator
- Pull-through cord (only at use of draw lead)

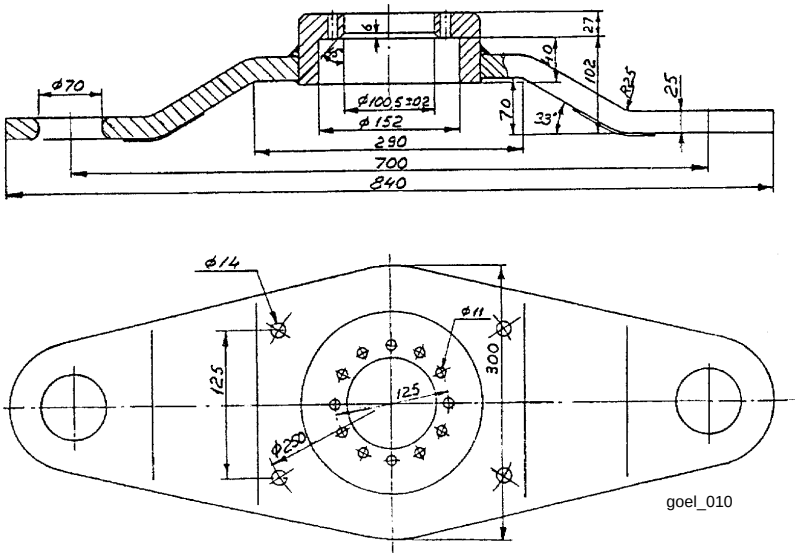

Fig. 5. Lifting gear, 9760 668-A. Mass 12.5 kg (aluminium).

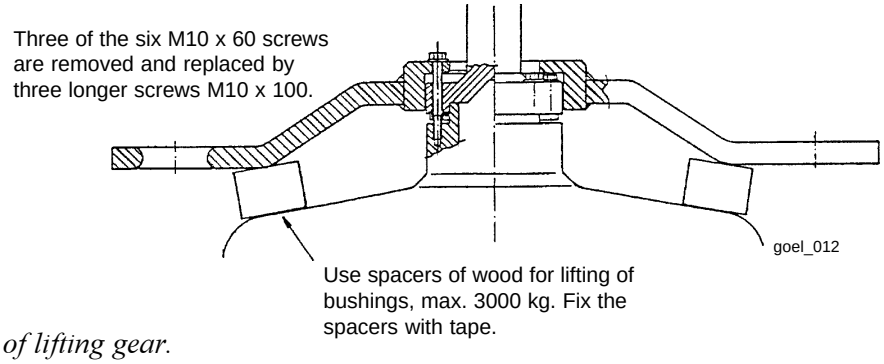

Fig. 6. Mounting of lifting gear.

2.2 Consumables

- Mobilgrease 28 or other suitable grease to lubricate and protect the earthing screw and the outer terminal o-ring gasket.
- Molykote 1000 or other suitable compound to lubricate the screws making the contact and sealing at the terminal studs.

2.3 Transport and handling

CAUTION: *The bushing may be transported and stored horizontally up to 6 months. For storing over 6 months it is recommended to raise the bushing to vertical position with the top end upwards. Keep the bushings dry and clean and protected against mechanical damage.*

Keep the bushings protected from penetrating water when stored outdoors. This means that the case must not be stored in areas where it can be foreseen that the ground will be wet and muddy during heavy rains. Shelter the case from rain and snow with a tarpaulin or roofing.

Carefully inspect the bushing on receiving with regard to shipping damage.

The bushings are normally delivered from ABB Components in boxes with the bushing supported by blocks and fibre boards. The boxes are marked with "Top End".

2.4 Lifting from the box

WARNING

For lifting the bushing from the box, apply two clean lifting slings as shown in the figure below. Support the bushing at the same points as in the box if placed on the ground.

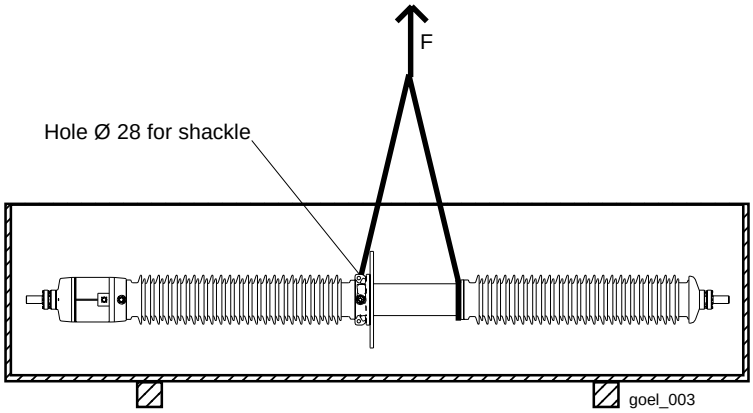

Fig. 7.
Lifting from the box.

2.5 Mounting

WARNING

Lift the bushing with the aid of a lifting tool, see section 2.1 Tools. Lift the bushing to vertical position and to an angle according to the figures below. Use a soft bedding under the bottom end of the bushing, e.g. a rubber mat.

The mass of the bushing is stated on the nameplate.

When mounting the bushing in the wall, lifting arrangements according to fig. 8a shall be used. When mounting the bushing vertically, lifting arrangements according to fig. 8b shall be used.

To let the air enter the expansion space in the outdoor chamber, the bushing must be kept at an angle larger than 30° from horizontal for at least 2 minutes. When lifting through the wall, the insulator sheds shall be protected by boards tied around the insulator.

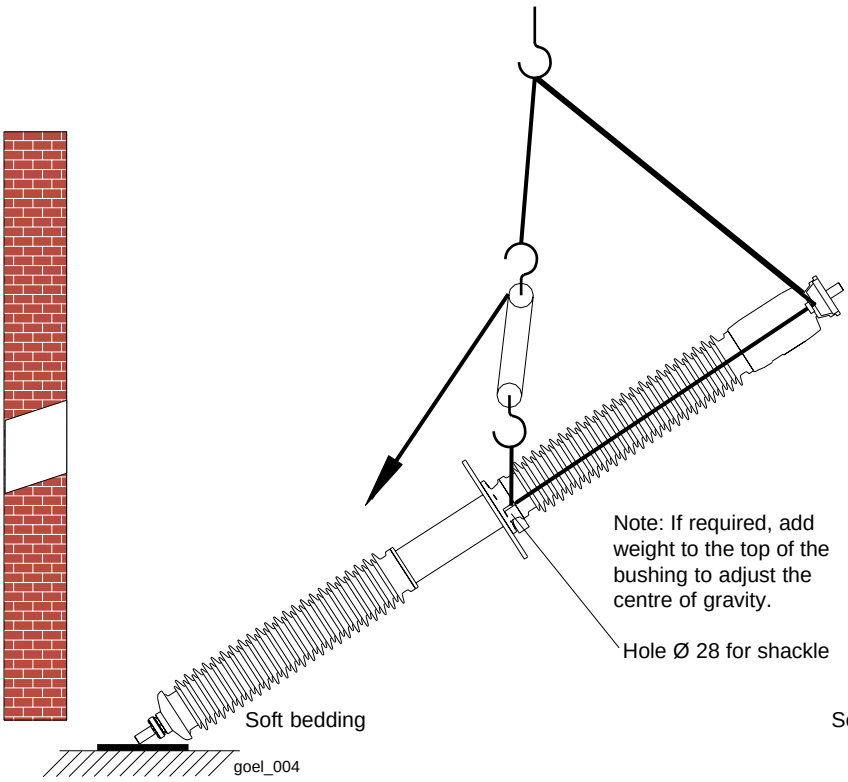

Fig. 8a. Mounting at a certain angle.

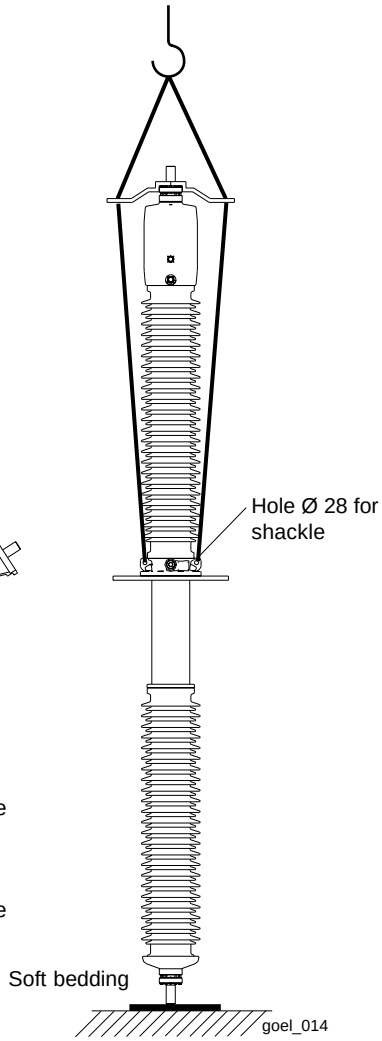

Fig. 8b. Vertical mounting.

2.5.1 Inner terminal / Stranded cable

CAUTION: *Mounting of the conductor must be performed according to the procedure below. The contact surfaces must be clean. The oxide on brazed terminals is to be removed by brushing.*

1. Stretch the stranded cable with the brazed inner terminal. Avoid making any loops.
2. Drop the pull-through cord through the bushing centre hole.
3. Fasten the M8 swivel to the inner terminal at the end of the stranded cable. Pull the stranded cable through by pulling the pull-through cord, with help from pressurized air if necessary.
4. Lock the inner terminal with the hexagon nut M16 according to Fig. 9.
5. Gently release the pull-through cord so the conductor rests on the contact washer.
6. Remove the pull-through cord.
7. Proceed immediately to section 2.6 Mounting of outer terminal.

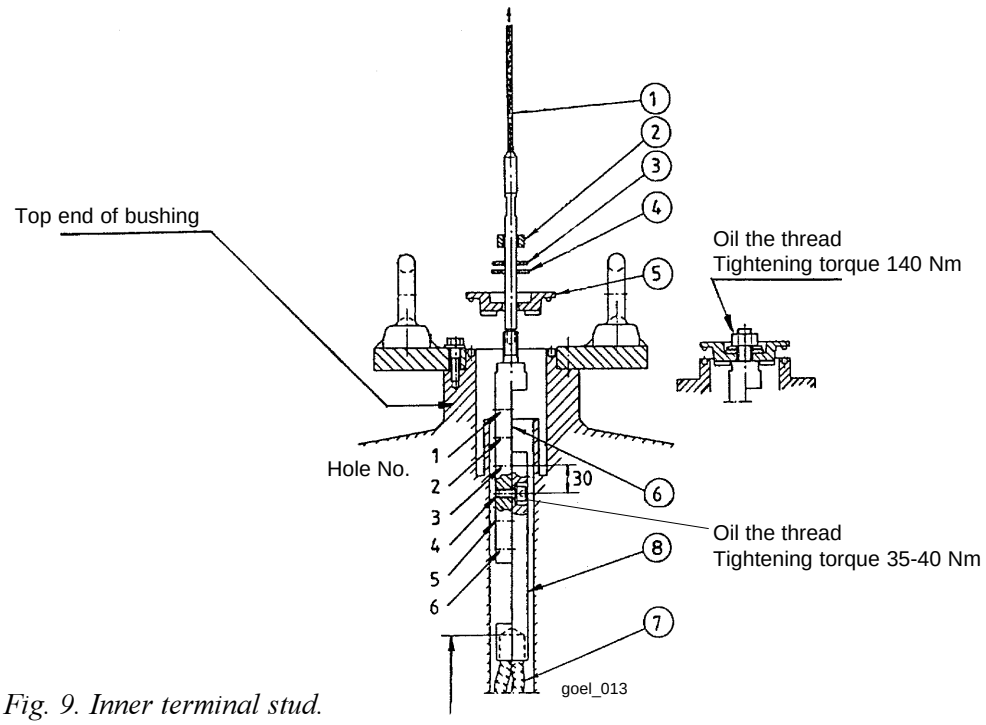

Fig. 9. Inner terminal stud.

1. Flexible pull-through lead
2. Hexagon nut M16
3. Conical spring washer 17 x 39 x 4 (Belleville-spring)
4. Washer 17 x 42 x 4
5. Contact washer 4649 133-5
6. Inner terminal, upper part
7. Flexible draw lead
8. Inner terminal, lower part

2.6 Mounting of outer terminal

CAUTION: *Before connection of conductor clamps, the outer terminals of aluminium must be carefully wire brushed and greased with a contact compund or vaseline. The inner contact surface on aluminium outer terminals are tin-zink plated, and wire brushing must thus not be carried out.*

In order to obtain the correct pressure and a low contact resistance, the following must be carried out:

1. Clean the contact and gasket surfaces carefully.
2. Lubricate the o-ring with Mobilgrease 28.
3. Assemble the tightening ring, the O-ring, and the outer terminal stud and push them over the inner terminal.
4. Grease all bolts on thread and underneath the head with Molykote 1000, or other suitable compound.
5. Insert and tighten the screws M10, with plane washer, which press the stud against the inner terminal. Tighten stepwise to a final torque of 40 ± 4 Nm.
6. Insert the M8 screws, with conical spring washer and plane washer, which hold the tightening ring. Tighten them to press the gasket into place. Tighten cross-wise to a final torque of 20 ±2 Nm.

CAUTION: It is extremely important in both cases to tighten evenly. *The bolts shall thus be tightened in steps, alternately on both sides.*

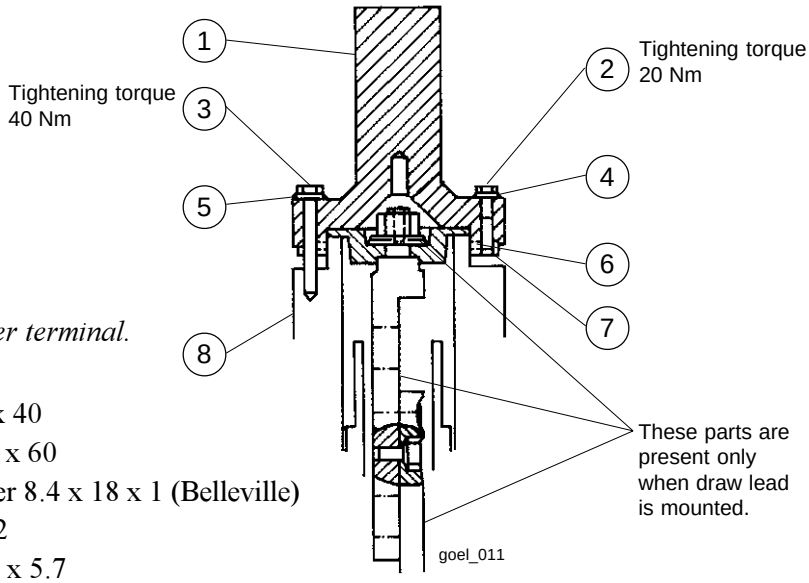

Fig. 10. Mounting of outer terminal.

1. Terminal stud
2. Hexagon screw M8 x 40
3. Hexagon screw M10 x 60
4. Conical spring washer 8.4 x 18 x 1 (Belleville)
5. Washer 10.5 x 22 x 2
6. Gasket (O-ring) 99.1 x 5.7
7. Retainer ring for gasket
8. Top/bottom end of bushing

2.7 Flange earthing

The bushing flange is provided with a tapped hole M12. After tightening the bolts fixing the bushing to the wall, the flange should be earthed. This prevents electrical discharges between bushing flange and wall under normal service conditions.

Apply a flexible cable between the M12 earthing hole in the bushing flange and a ground connection on the wall. Grease the screw (Mobilgrease 28 recommended) and tighten the M12 in the bushing to 40 Nm. Connect the other end of the cable to the ground connection.

2.8 Waiting time before energizing

CAUTION: *When a bushing has been stored horizontally, it must be raised with the top up for at least 12 hours before service voltage is applied and 24 hours before test voltage is applied. If, by mistake, the bushing has been stored horizontally more than one year, it must be placed in the vertical position for at least one week before energizing.*

2.9 Recommended test before energizing

The following test may be performed to check the insulation. The test should be made after mounting, but before connecting the outer terminal of the bushing to the rest of the switchyard power circuit.

- Measurement of capacitance and tan δ.

2.9.1 Measurement of capacitance and tan δ

WARNING

Since C_2 usually is relatively small, the test tap must never be open-circuited when applying a voltage to the bushing. It must always be earthed or connected to an external impedance.

After mounting, a capacitance measurement is recommended. A measuring bridge is connected between the outer terminal and the test tap. This is possible with the bushing mounted, as the bushing has an insulated test tap, see Fig. 3. More details can be found in ABB Components' product information *2750 515E-56*, "Capacitance and dissipation factor (tan δ) test on condenser bushings in the field".

With the bushing de-energized and disconnected, the test tap cover is removed. The measuring equipment is connected to the test tap and the measuring voltage source to the bushing terminal.

The capacitances C_1 between the centre tube and the tap, and the capacitance C_2, between the test tap and earth are marked on the nameplate.

The dissipation factor varies with the temperature of the bushing body, and the measured value should thus be multiplied with the correction factor (multiplier) given in Table 2.

Table 2. Dissipation factor variations as a function of temperature.

Bushing body temperature °C	**Multiplier to 20 °C**
3-7	0.85
8-12	0.90
13-17	0.95
18-22	1.00
23-27	1.05
28-32	1.10
33-37	1.15
38-42	1.20
43-47	1.25
48-52	1.30

3 Maintenance

The GOEL bushings are maintenance-free. It is recommended to note the oil level during normal routine inspections in the plant.

WARNING

No work at all can be performed on the bushing while it is energized or not earthed.

3.1 Recommended maintenance and supervision

1. Cleaning of insulator surface
2. Measurement of capacitance and tan δ
3. Thermovision (infrared camera) check for local overheating on connectors
4. Check for leakage
5. Checking and adjustment of the oil level

3.1.1 Cleaning of insulator surface

CAUTION: *Avoid having solvent on the bushing gasket and porcelain joints.*

Under conditions of extreme pollution it may be necessary to clean the porcelain insulator surface. This should be done by water-jet or by wiping with a moist cloth. If necessary, ethyl-alcohol or ethyl-acetate may be used.

3.1.2 Measurement of capacitance and tan δ

Please refer to Chapter 2 Installation.

3.1.3 Thermovision (infrared camera) check for local overheating on connectors

At maximum rated current, the bushing outer terminal normally takes a temperature of about 35 to 45 °C above the ambient air. Significantly higher temperatures, especially at lower current loading, can be a sign of bad connections.

3.1.4 Check for leakage

Make a visual inspection for oil leakage during normal station supervision.

3.1.5 Checking and adjustment of the oil level

For bushings with two oil level glasses, the oil level at 20 °C is to be between the two glasses. Bushings with magnetic oil level indication have the indication arrranged to show that the oil level does not reach the minimum level. The oil level at normal and high temperatures is usually above the scale of the indicator. If the oil level is too low, clean and dry transformer oil must be added. For the correct oil level A, according to fig. 1a, please contact ABB Components. Adjustment of oil level is allowed only when the temperature of the bushing is +5 °C to +35 °C. It is recommended that the sealing plug be provided with a new gasket after the check. The sealing plug is to be tightened with 20 Nm. For further information on oil sampling, ask for our product information *2750 515-103,* ”Oil sampling from bushings”.

For topping-up of the bushing, any clean and dry transformer oil available at site may be used.

3.2 Disposal after end of service life

The bushing consists of the following material:

- Conductor tube of copper or low-alloy aluminium.
- Terminals of copper, brass or low-alloy aluminium may be plated with for instance silver, tin, gold or nickel in layer thickness up to 20 µm.
- Transformer oil as per IEC 296, class 2.
- Transformer oil impregnated condenser body consists of paper and 1 % Al foils.
- Top housing, top nut and flexible connection consist of Al alloys.
- Flange may be designed of aluminium or welded steel.
- Press ring for oil level glass and test tap cap consist of plated brass.
- Prism glass consists of glass.
- Insulators consist of quartz or alumino silicate based porcelain.

ABB Power Technology Products AB
Components
Visiting address: Lyviksvägen 10
Postal address: SE-771 80 Ludvika, SWEDEN
Tel.+46 240 78 20 00
Fax +46 240 121 57
E-mail: sales@se.abb.com
www.abb.com

2750 515-132 en, 1998-02-15