First experiences with design and engineering of IEC 61850 based Substation Automation Systems in India

Rajiv Krishnan, Bapuji Palki

ABB Limited, Bangalore, INDIA.

Abstract: As far as substation automation systems are concerned, one of the prime requirements of most Indian utilities is the interoperability between IEDs of different manufacturers. The standard IEC 61850 - Communication Networks and Systems in Substations - allows such interoperability between IEDs for protection and automation of substations. Presently, many manufacturers have implemented, or are in the process of implementing this standard in their IEDs. This has encouraged some utilities in India to specify IEC 61850 based Substation Automation systems. Their aim is to ensure that both system requirements are met and the features and benefits of the standard are fully exploited.

This paper gives the first experiences with designing and engineering of IEC 61850 based Substation Automation Systems in India.

Keywords: Interoperability, IEC 61850, Substation Automation, MicroSCADA Pro, IED, SCL, GOOSE, PCM 600, IET, CCT

1 INTRODUCTION

Till recently there were very few Indian utilities who had installed Substation Automations (SA) Systems in their network. These systems were not considered as a necessity by most utilities. Further, since most suppliers used proprietary protocols, the lack of easy interoperability between devices from various vendors ensured that substation automation remained a low priority for utilities. However, there are more than 4000 SA Systems installed worldwide that prove the acceptance of SA systems by many utilities.

In the last decade a new standard, IEC 61850, was developed with the intention of providing interoperability between devices from different manufacturers for all functions performed in substations. A main feature of this standard is that it is designed to be future proof. It also allows free allocation of functions among the various devices of the substation automation system. The fourteen parts of this standard have been released by IEC between 2003 and 2005.

The objective of this paper is not to discuss the benefits of IEC 61850. The imminent release of the standard, that promised interoperability and long term stability, emboldened a few utilities in India to specify IEC 61850 based substation automation systems in 2004 itself. Major utilities like POWERGRID and NTPC have started specifying IEC 61850 based SA systems for all their new substations.

2 IEC 61850 STANDARD

The primary goals of IEC 61850 standard are:

- Provide interoperability between devices of different manufacturers.
- Support free allocation of functions to devices.
- Guarantee long term stability of the standard.

The standard realizes these goals by defining domain specific data models with standardized objects and standardized services. It has separated the application from the communication and is thus able to follow the progress in communication technology as well as the evolving system requirements. The standard also defines a Substation Configuration description Language (SCL) for comprehensive, consistent system definition and engineering.

It is to be noted that interoperability does not imply interchangeability of IEDs from different manufacturers. Interoperability is defined as the ability of IEDs from one or several manufacturers to operate on the same communication network, exchange information and use the information for their own functions. Further, the IEC 61850 standard does not standardize functions or their implementations in IEDs. Hence, mere compliance with IEC 61850 does not imply that the functional requirements of the utility are fully realized.

Interfaces and communication protocols to remote control centers are not specified by this standard. So, other standards like IEC 60870-5-101 or IEC 60870-5-104 have to be specified for communication to remote control centers.

3 Customer Specification

POWERGRID was the first utility in India to specify an IEC 61850 based Substation Automation System. The new specification was based on the existing one for Control and Relay Panels and had separate sections for Relay & Protection Panels and Substation Automation System.

This paper will cover the engineering of the Substation Automation System for the Maharanibagh 400 / 220 kV GIS Substation. Due to operational reasons separate SAS were specified for the 400 kV switchyard and the 220 kV switchyard. Both the switchyards have a two bus architecture, and the functionality are more or less identical, so the focus of this paper will be only on the SAS for 400 kV substation.

3.1 Relay and Protection Panels

There was no change from the earlier specification in this section. All the major protection devices were to be numerical and the communication protocol was to be in conformance with IEC 61850 standard. The various protections required for transmission lines, transformers, reactors, bus bars, etc., were defined, along with other functions like fault locator, disturbance recorder and time synchronization. However, these functions were not defined as IEC 61850 Logical Nodes.

3.1.1 Protection Constraints

The specification also listed some constraints, and the ones that had the most impact on the design of the system and in the selection of IEDs are listed below:

- Control and Protection functions were not to be combined in the same physical device.
- Main-I and Main-II line protections should be from different manufacturers.
- For the 400 kV SAS, the Auto reclose function was to be a separate device and not combined with either distance protection relays or bay controllers.

3.2 Substation Automation System

This section was new as POWERGRID was introducing SAS for the first time in their substations. Station level HMI, remote gateways, communication network, bay control IEDs, GPS based master clock and other peripherals were defined in this section. Since the HMI functions are not standardized and are not covered in the scope of IEC 61850, the required supervisory control and monitoring functions are not discussed in this paper. The communication protocol from the gateways to the remote control centers was specified as IEC 60870-5-101.

3.2.1 SAS Constraints

The specification also listed some constraints, and the ones that had the most impact on the design of the system are listed below:

- SAS to be based on a decentralized architecture and on a concept of bay-oriented distributed intelligence.
- One bay control IED to be provided for each bay.
- The failure of one bay control IED should not affect the functioning of the others.
- All connections from the IEDs to the process have to be hardwired.
- All interlocks have to be software based. Hardwired interlocks were to be provided in addition to the software interlocks for bus earth switch interlocks.
- One Ethernet switch to be provided for each 400 kV diameter.
- A typical system architecture as shown in Figure 1 was specified. The overall system availability was to be 99.98%.

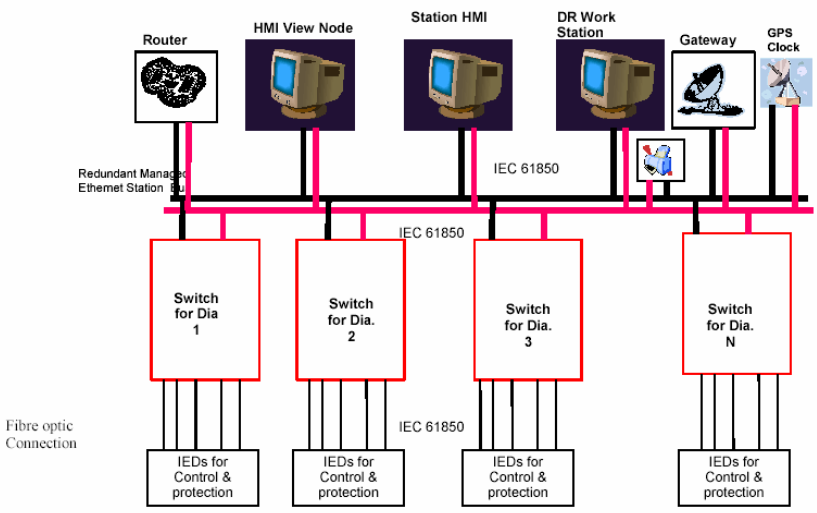

Figure 1: Typical substation automation system architecture

3.3 System Design

The SAS was designed considering the functional requirements of POWERGRID's Technical Specification including the various constraints. The SAS architecture is structured in two levels:

- station level and
- bay level.

3.3.1 Station Level

A redundant PC based HMI enables local station control through ABB's software package MicroSCADA Pro, which supports communication over an IEC 61850-8-1 bus as an IEC 61850 client. MicroSCADA Pro contains an extensive range of SCADA functions to meet POWERGRID's functional requirements. However, they are not discussed in this paper as they fall outside the scope of IEC 61850 standard.

The IEC 61850-8-1 inter bay bus provides station-to-bay and bay-to-bay data exchange. Industrial grade IEC 61850 compliant Ethernet switches are used to form the Ethernet LAN. IEC 61850 has not standardized a redundant LAN configuration. However, on reliability the clause 4.3.1 of IEC 61850-3 states the following:

> *The substation shall continue to be operable, according to the "graceful degradation" principle, if any SAS communications component fails. There should be no single point of failure that will cause the substation to be inoperable. Adequate local monitoring and control shall be maintained. A failure of any component should not result in an undetected loss of functions nor multiple and cascading component failures.*

Hence, considering the reliability, availability and interoperability requirements, the Ethernet LAN is set up in a fault-tolerant ring configuration. Hence, the Ethernet switches (RuggedCom make RSG2100) used should support IEEE 802.1w (Rapid Spanning Tree Protocol). Additionally, to meet the application needs of station wide software interlocks, the Ethernet switches selected have to comply with IEEE 802.1p and IEEE 802.1Q standards.

Redundant communication gateways are provided for information exchange with remote network control centres using IEC 60870-5-101 protocol. The gateways are IEC 61850 clients and they communicate directly with the bay level IEDs over the IEC 61850-8-1 bus.

A dedicated GPS master clock is provided for the synchronization of the entire system. This master clock is independent of the station computers and gateways, and it synchronizes all devices via the inter bay bus using SNTP protocol as defined in IEC 61850 standard.

3.3.1 Bay Level

A bay comprises of one circuit breaker and associated disconnectors, earth switches and instrument transformers. At bay level, the IEDs provide all bay level functions like control (command outputs), monitoring (status indications, measured values) and protection.

The data exchange among bay level IEDs, and between bay level and station level take place via the fibre-optic inter bay bus according to IEC 61850-8-1 standard. The use of fibre-optic LAN guarantees disturbance-free communication. Though it is not explicitly specified, the use of software interlocks implies the use of GOOSE messages among the IEDs. The decentralized architecture ensures that station wide interlocking is available even when the station computer fails.

At station level, the entire station is controlled and supervised from the station HMI. But, it is possible to control and monitor the bay from the bay level IEDs using the local HMI, whenever required. Clear control priorities prevent the initiation of simultaneous operation of a single switch from more than one of the various control levels. The control operation also depends on the status of other functions like interlocking, synchrocheck, etc., as applicable. The system architecture of 400 kV SAS is given in Figure 2 below.

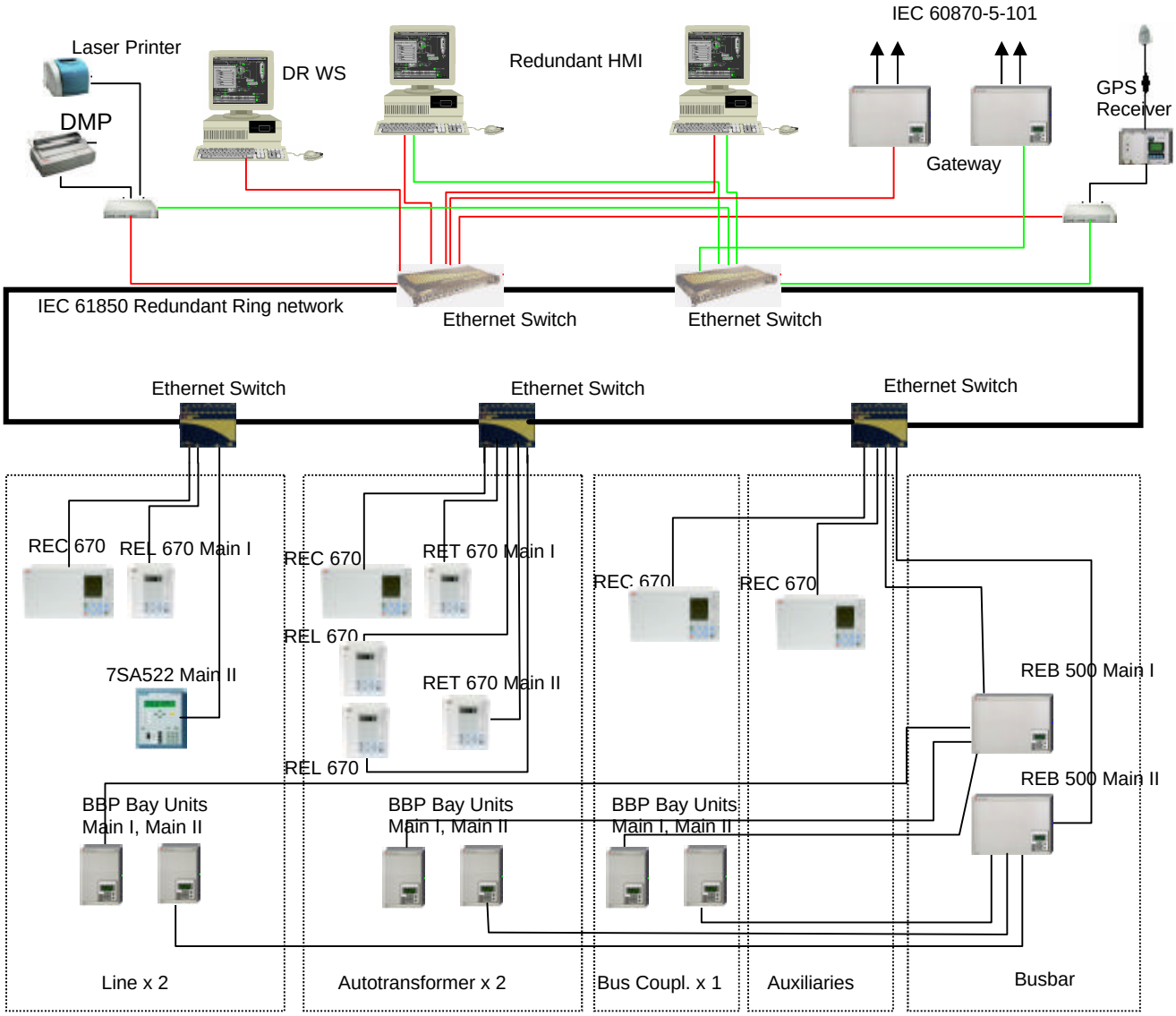

Figure 2: System Architecture for the 400 kV SAS

3.4 Selection of IEDs

Since the POWERGRID specification had not the required control and protection functions as IEC 61850 logical nodes, the first step was to list out functions required per bay as IEC 61850 logical nodes. As an example, the details of one type of bay - Line bay - are explained below. Similar exercise was done for the ICT bay and the bus coupler bay.

3.4.1 Line Bays

The following functions are required for 400 kV line bays and wherever applicable, the Logical Nodes, or LN, as defined in IEC 61850 are also mentioned.

- Distance protection (PDIS, 21), with quadrilateral characteristics and suitable for series compensated lines. *Each zone of the distance protection is modeled as one PDIS and hence three instances of PDIS are used. The IEC 61850 data model does not specify the type of characteristics used or the suitability of the distance protection for series compensated lines*.
- Power swing block (RPSB, 78)
- Current reversal and weak end in-feed logic (PSCH, 85)
- Permissive under reach / over reach / blocking (PSCH, 85)
- Fuse failure supervision (RFUF, 60). *The standard does not define any LN for fuse failure and hence a new LN extension RFUF has been defined by ABB as per the extension rules defined in the standard.*
- Directional backup IDMT earth fault protection (PDEF, 67N)
- Single shot auto reclose function (RREC, 79), with single phase or three phase reclosing facility. *The data model for the Logical Node RREC does not define whether the reclosing is single phase or three phase.*
- Synchronizing and energizing check (RSYN, 25)
- Breaker failure protection (RBRF, 50BF)
- Trip Circuit Supervision. *This is another function that is not defined as an LN in the standard. Hence, we have configured this data as a generic I/O (GGIO) and the data is reported to the HMI.*
- Line over voltage protection (PTOV, 59)
- Distributed bus bar protection (PBDF, 87B) bay unit
- Fault locator (RFLO)
- Disturbance Recording, bay level acquisition (RDRE), with 8 analog and 16 digital**.**
- Sequential event recorder (RDRE) with time resolution of 1 ms
- Breaker, isolator and earth switch control (CSWI) with Select Before Operate and Double Command blocking. *One instance of CSWI for circuit breaker and each isolator and earth switch. The stSeld attribute of the CSWI is used to prevent operation of more than one device at a time.*

- Bay level and inter bay interlocks (CILO). *One instance per primary equipment.*
- Measurement of voltages, currents, active and reactive power (MMXU). *The logical node MSQI is used for the zero sequence currents and voltages.*
- Local HMI (IHMI)

As per IEC 61850, the primary equipment are also represented as LNs, and the ones used in this bay are:

- Circuit breaker (XCBR). *One instance of XCBR is defined for each phase of the three phase circuit breaker.*
- Isolators (XSWI). *One instance of XSWI per isolator.*
- Earth switches (XSWI). *One instance of XSWI per earth switch.*
- Current transformer (TCTR)
- Voltage transformer (TVTR)

Since process bus (IEC 61850-9-2) is not used, these LNs are hardwired inputs and outputs of the control and protection IEDs. XCBR and XSWI represent the status inputs from, and command outputs to the breaker, isolators and earth switches. TCTR and TVTR are the current and voltage inputs respectively from the instrument transformers.

3.4.2 Implementation of Line bay functionality

To achieve the above functionality, various IEDs were selected keeping in mind the constraints specified by POWERGRID.

The IED for Main 1 distance protection is ABB make REL 670, while for Main 2 we used Siemens make 7SA522 relay. The bay control IED is ABB make REC 670, with built in mimic. The bay control IED is designed to control (switch ON / OFF), along with all necessary interlocks, one circuit breaker, three isolators and three earth switches in the Line bay. It also measures voltages (R-Y, Y-B, B-R), currents (R, Y and B) and active and reactive power for each line. ABB make REB 500 bay unit is used for the bus bar protection function. Breaker failure protection is also part of this IED.

It is possible to provide the Auto Reclose (RREC) function in the bay control IED or in the Line protection IED. But to meet the constraint specified by POWERGRID, the RREC function was realized using an external auto reclose relay along with synchrocheck relay. The auto reclose function is triggered by hardwired outputs from the bay protection LNs, viz., PDIS, PDEF and PTOV.

All intra-bay interlocks are software based and performed by the bay controller. The complete bay can be monitored and controlled from the local HMI on the bay controller. Additionally, hardwired switches are provided to operate the breaker during emergencies. During such emergency operations all interlocks are bypassed.

Station wide interlocks are software based; the data for the interlocks are transmitted using GOOSE messages by the individual IEDs. Hardware backup is provided for bus earth switch interlocks.

The other bays were engineered in a similar manner.

3.5 SAS Engineering

The SAS engineering consisted of two parts. The first step was the IED engineering to generate the SCL (*.icd) files for each IED. For this, the respective vendor specific IED engineering tools mentioned below were used.

- PCM 600 for ABB make IEDs
- DIGSI for Siemens IEDs

The second step was the system level engineering to generate the SCL (*.scd) file. For this, ABB's system engineering tool IET was used.

3.5.1 IED Engineering

PCM 600 is a set of tools used for configuring the ABB make IEDs, setting parameters, uploading and viewing disturbance records, as well as to generate the icd files for the individual IEDs. The configurations of the protection functions, building of the interlock logics, etc., are done with the PCM 600 for ABB make IEDs. The configuration of the protection function of Siemens make 7SA522 was done using the DIGSI tool from Siemens. The SCL outputs, containing the IED capabilities (logical devices, logical nodes), data sets and report control blocks, from these two tools were used as inputs at the system engineering stage. The final step in IED engineering is done after the system engineering is completed. This part is described at the end of system engineering section.

3.5.2 System Engineering

The IET tool is initially used to define the complete system architecture. It automatically defines the IP addresses for all the devices used in the SAS. Thus there is consistency in the addressing and the possibility of any error is totally eliminated. The configurations of the Ethernet switches can be generated from the IET and these files can be downloaded into the switches. In this case the links from the Ethernet switches to individual IEDs were set at 100 Mbps, while the uplinks between the switches were at 1 Gbps.

The system configuration created is used by the Communication Configuration Tool (CCT) in the IET for generating the SCL file. All the IEDs, including the clients like HMI and gateways, are listed in the CCT. The icd file of the individual IEDs are imported into the CCT one by one. The final step is to configure the communication among the various devices.

The HMI and gateways are IEC 61850 clients, while the IEDs are the IEC 61850 servers. The communication between the servers and clients is by means of reports. The data in the IEDs that need to be reported to the clients are divided into one or more datasets in each IED. Each data being reported normally consists of three parts, the first one is the status or value itself, the second part is the quality of the data and the third part is the time of occurrence. The transmission of the dataset from the servers to the clients is decided by the report control blocks. The report control blocks define what data is to be transmitted to what (one or more) client and when. The transmission of the report can be initiated on data change, data update, quality change, periodically or a combination of these. Periodic reporting was not used in the Maharanibagh SAS. The complete data set is sent to the client whenever there is a data change, data update or quality change for one data. ABB make IEDs

use buffered reporting while Siemens make 7SA522 supports unbuffered reporting. In the case of buffered reporting the data are stored for a predefined time before they are reported to the client. The buffer times are set individually for each report control block.

The CCT is also used to configure the GOOSE messages. Just as in the case of reports, GOOSE messaging is also based on data sets. The difference here is that the data sets do not have the time attribute; only the status value and quality of the data are included. Since GOOSE messages are critical data used for station wide interlocks, they have to be reported very fast and without any loss of data. Hence, as soon as there is a change in data it is reported immediately and then repeated at within a few milliseconds three to four times. After which the message is continuously repeated at a predefined maximum cycle time. The transmission of GOOSE data sets are determined by the GOOSE Control Block. The clients for the GOOSE messages are defined in the GOOSE control block

The GOOSE messages pass directly from the layer two to layer seven of the ISO/OSI seven layer reference model. This means that there is no IP address available to route the information to the intended recipients, and hence it is necessary that the Ethernet switches support VLAN (IEEE 802.1Q) and the messages are routed using the MAC address and the VLAN ID defined in the GOOSE control blocks. GOOSE messages have priority over other messages and so it is necessary that the Ethernet switches support IEEE 802.1p standard for priority tagging.

After communication configuration is completed, the substation configuration data (scd file) is generated from the CCT. This SCL file is imported into PCM 600 to get the configured data for each of the IEDs. The GOOSE inputs coming from the other IEDs, if applicable, are connected to the correct functions. The final configuration is then downloaded into the individual IEDs from the PCM 600 tool. The IED is then ready to be used in this particular SAS.

The SCL file with the substation configuration data is also used to configure the 61850 client databases of MicroSCADA Pro and the communication gateways. This ensures that the data is consistent throughout the system.

The engineering of the standard SCADA functionality in the HMI (MicroSCADA Pro Graphical User Interface) is not dependent on the communication standard and hence not described in this paper.

4 Conclusions

The design and engineering of the first IEC 61850 based SAS was a new experience. Conventional engineering was more or less limited to the connections to the process. Almost all the rest of the engineering were done by software using the new tools. It would have been impossible to engineer the SAS without these software tools. The availability of tested and proven IED engineering tool and system engineering tool is essential for successful design and engineering of the SAS.

The interoperability of devices from ABB and Siemens was successfully demonstrated to the customer during the Factory Acceptance Tests. The use of GOOSE messages for implementing software interlocks and distributed functions was also successfully demonstrated.

- GOOSE message from Siemens make 7SA522 was used to trigger Disturbance Recorder in ABB make REL 670.
- The selected status of a primary equipment received as a GOOSE message from one REC 670 was used to block operation of other primary equipment from the station level HMI and other bay level local HMIs.
- Station wide software interlocks were fully checked. The back-up hardwired interlock for bus earth switch was also checked by manually creating a communication error in one of the bay controllers. It is possible to define some sort of a back-up action or “graceful degradation” for the other distributed functions in case of failure of any logical node or communication link.

It was seen that some of the functions required by POWERGRID were not defined in the standard. These were realized using the generic LNs or by adding extensions. Further, some of the LNs, e.g. Automatic Tap Changer Control - ATCC - was not meeting the functional requirements. The Auto-manual indication of ATCC is not controllable and hence it is not possible to switch the operation of ATCC from Auto to Manual or vice versa from the station HMI. The standard defines many data attributes as optional. At the time of specification it will be necessary for the utility to define which of the optional attributes of the various logical nodes are required for their application. Then it will not be necessary to specify a separate signal list.

Though POWERGRID had not specified the functions as IEC 61850 Logical Nodes, it was quite easy to engineer the system as they had clearly specified the protection, control and monitoring functions that they needed. The specification could have been simpler if they had combined the two sections - Relay & Protection and Substation Automation - into one section and given the functional requirements bay wise using the IEC 61850 logical nodes. The authors feel that design could have been optimized, and yet maintain the availability and reliability as specified, if some of the constraints regarding the allocation of LNs in physical devices were removed.

POWERGRID is likely to commission the first IEC 61850 based SAS in the last quarter of 2006. We will learn more about the system once it is put in actual operation. It is hoped that as POWERGRID gains more confidence in the standard as well as in the performance of the SAS there would be a move towards more optimized solutions.