ABB ELECTRIFICATION - SERVICE

SafeRing / SafePlus

Spare parts catalog

—

Our support journey is built on services protecting customer investments and the journey has four steps: maintain, modernize, assess and manage.

Start-up and maintenance services ensure operational efficiency and rapid response.

Specifically spare parts, and related workshop and on-site services support customers in keeping assets available and reliable.

Table of contents

05 - 09 **1. Introduction**

05 1.1 SafeRing / SafePlus spare parts

05 1.2 Facts

05 1.3 Recommended spare parts for the installation and commissioning of switchgear

06 1.4 Recommended spare parts for 2 and 5 years of operation of the switchgear

06 1.5 Benefits

06 1.6 Operational progression

07 1.7 How to get them

08 1.8 Panels classification

08 1.9 Spare parts classification

09 1.10 Abbrivation

11-14 **2. Recommended spare parts**

16-51 **3. Spare parts**

16 3.1 Auxiliary Contactor

17 3.2 Auxiliary Contacts

18 3.3 Bushing and Busbar

20 3.4 Cable Compartment

23 3.5 Closing Coil

24 3.6 Counter

25 3.7 Covers and Frames

29 3.8 Current Transformers

Table of contents

30	3.9	Feeder and Batteries
31	3.10	Fuses
32	3.11	Inter Locks
33	3.12	LV Modules
34	3.13	Measure/Indicator Device
37	3.14	Motor
40	3.15	Opening Coil
42	3.16	Operating Handle and Tools
43	3.17	Operating Mechanism
44	3.18	Protection Relays
45	3.19	Push Buttons
46	3.20	SF6 Device and Tools
47	3.21	Tulip and Jaw Contacts
48	3.22	Undervoltage Coil
49	3.23	Voltage Transformers
50	3.24	Wiring andPlugs
51	3.25	Upgrades

1. Introduction

1.1 SafeRing / SafePlus spare parts

ABB offers a wide list of spare parts for your Gas-insulated ring main unit SafeRing and Compact switchgear SafePlus switchgear addressing important requirements of the future.

Gas-insulated ring main unit SafeRing and compact switchgear SafePlus is ABB Gas-insulated Switchgears (GIS) for secondary distribution. This catalog cover spare parts for the following products:

- SafeRing 12-24kV / SafePlus 12-24kV
- SafeRing 36 / SafePlus 36
- SafeRing Air / SafePlus Air
- SafeRing AirPlus / SafePlus AirPlus

1.2 Facts

There are periodic and unforeseen events occurring due to different reasons like wrong handling or external impacts that may damage the switchgear. To ensure uptime of the customer's processes, the availability of proper spare parts for your product is an important element of every operational planning. Therefore ABB offers Recommended spare part lists which precisely fit your switchgear during the different lifecycle phases:

- Installation and Commissioning (I&C)
- 2 years of operation
- 5 years of operation

1.3 Recommended spare parts for the installation and commissioning of switchgear

During the I&C process of a switchgear, there are unexpected situations that can cause delays in the start-up plan if you do not have the proper spare parts available in stock. ABB provides a recommended list of spare parts including the most frequently replaced components for:

- Fast availability during commissioning activities
- Fast substitution or repair possibilities
- Avoid start up delays due to most common components possible unexpected failures
- Minimum stock holdings for your switchgear

1.4 Recommended spare parts for 2 and 5 years of operation of the switchgear

Operating a power grid or powering a process needs reliable equipment, which is given by ABB switchgear. During the lifecycle of your switchgear, once it is in operation, it is important to keep all components updated and at their best performance to avoid failures or unwanted downtime. For this reason, ABB provides a recommended list of spare parts including the most common items for maintenance activities and frequently replaced components based on the lifecycle of the switchgear for:

- Stock availability on site according to switchgear lifecycle status
- Faster response for maintenance activities and possible repairs if required
- Systematic approach for preventive care and strategy on site
- Enhancing performance and uptime of the switchgear

1.5 Benefits

- Complete list of recommended spare parts for a proper stock at site
- Proper stock holdings for I&C and maintenance activities
- Fast recovery from failure
- Fast mobilization in case of urgency as dedicated spare parts are available in customer's stock
- Original ABB parts
- ABB warranty on the spares

1.6 Operational progression

ABB is a reliable partner supporting the spare parts optimization ensuring the right setup at the customer warehouse. Their procurement shall start at I&C stage and progressively integrated step by step with the additional required ones for the next 2 and 5 years. The stock shall then be used for the next decades and refilled as consumed. Preventive maintenance activities shall also use the same spare parts and provide a consistent feedback with respect to the specific quantity needs due to the site operational and environmental conditions.

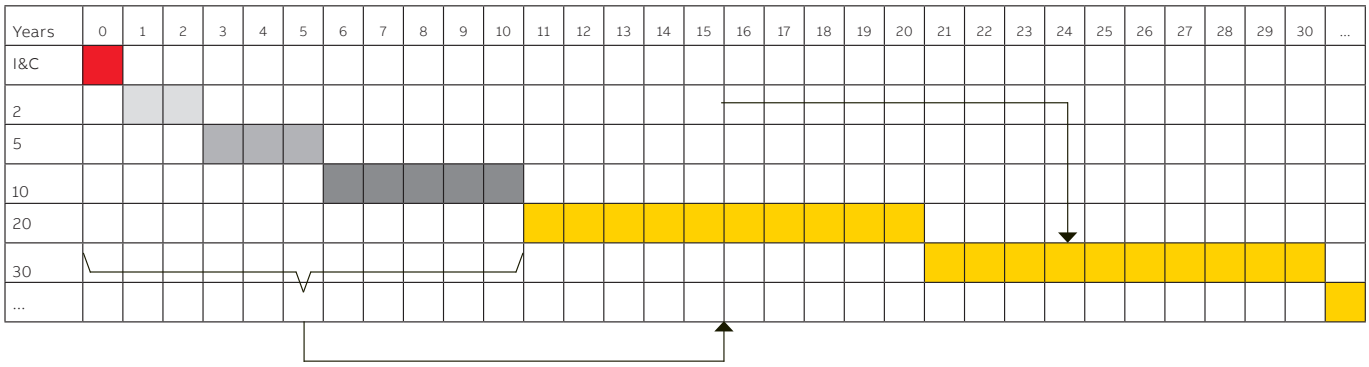

—
Operational progression

1.7 How to get them

Customers can get the spare parts through the following channels:

- On demand to ABB representatives
- Using the e-commerce tools in those countries where already live
- Managed by ABB activating a Power Care customer support agreement

ABB Power Care	Entery level	Level 1	Level 2	Level 3
Skills Development Services	Product Training List	Product Training	Application Training	Coaching Services
Emergency Maintenance Services	Single point of Contact	Technical Support with agreed response time	Call-out Support with agreed response time	Spare Parts Assessment and Management
Diagnosis and Condition Assesment Services	Documentation of Installed Base and Preliminary Survey	Asset Condition and Risk Assessment	Asset Monitoring	Remote Asset Monitoring
Self-Maintenance Services	Installed Base Life Cycle Status Report	Manuals and Instructions On-line	On-line Support for Self-maintenance	File Storage
Delivered Maintenance Services	Periodic Technical Assessment	Protection and Control Engineering Services	Switching Apparatus Engineering Services	Full Switchgear Engineering Services

—
How to get them

1.8 Panels classification

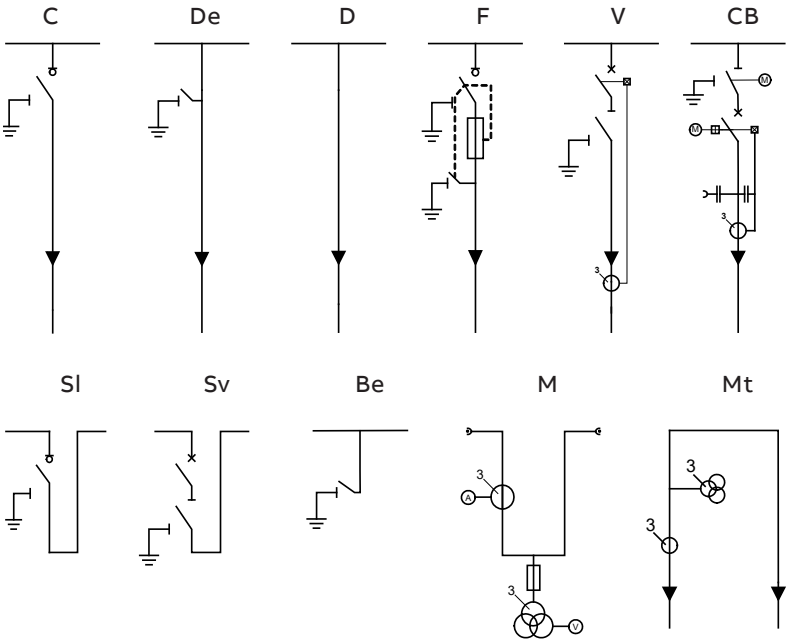

Available modules:

C	Cable switch module
De	Direct cable connection with earthing module
D	Direct cable connection module
F	Switch-fuse disconnector module
V	Vacuum circuit-breaker module
V20/V25	High duty Vacuum circuit-breaker module 20/25kA
CB	Circuit-breaker module
Sl	Busbar sectionalizer, load break switch module
Sv	Busbar sectionalizer, vacuum circuit-breaker module
Sv20/Sv25	Busbar sectionalizer, vacuum circuit-breaker module 20/25kA
Be	Busbar earthing module
M	Metering module
Mt	Metering tariff module

1.9 Spare parts classification (SPC)

Level 1 (L1): parts that can be replaced directly by customers by following equipment user manual instructions or better after having attended a L1 training (introduction training for equipment operators).

Level 2 (L2): parts that can be replaced directly by customers by following equipment user manual instructions or better after having attended a L2 training (advanced training for equipment maintainers and site operators).

Level 3 (L3): parts that can be delivered when associated to a qualified ABB maintenance or repairing activity only. These parts require dedicated tools and deep specific competence to be replaced.

1.10 Abbrevations

Abbrevation	Description
12-24	SafeRing 12-24kV / SafePlus 12-24kV
36	SafeRing 36 / SafePlus 36
2 yrs	Two years
5 yrs	Five years
2NC	Two Normally Closed
2NO	Two Normally Open
2PA	Two Position A-mechanism
2PE	Two Position Earthing Switch
3PAE	Three Position A-mechanism Earthing switch
3PKE	Three Position K-mechanism Earthing switch
3PKSE	Three Position Kipp-mechanism Spent (KS-mek) Earthing switch
ANSI	American National Standards Institute
Air	SafeRing Air / SafePlus Air
AirPlus	SafeRing AirPlus / SafePlus AirPlus
BU's	Business Units
C	Cable Switch
CB	Circuit Breaker
cont.	Continued
CPL	Complete
CT	Current Transformer
DC	Disconnector
EF	Earth Fault
EFI	Earth Fault Indicator
EL2/EL2S	Mechanism for 12-24kV in V20/V25-module
EL3/EL3S	Mechanism for 36kV in V-module
ELDS	Electrification, Distribution Solutions
ES	Earth Switch
F	Fuse switch combination
FA	Feeder Automation (device)
FS	Fuse Switch.
FPI	Fault Passage Indicator
FS	Fuse Switch disconnector
GFFF	Global Focus Feeder Factory
GIS	Gas-insulated Switchgear
HSE	Health, Safety and Environment

Abbrevation	Description
I&C	Installation and Commisioning
ICC	Interlocked Cable Compartment
IEC	International Electrotechnical Commission
LBU	Local Business Unit
LSC	Local Service Center
LV	Low Voltage
HR	High Resistance
LBS	Load Break Switch
LV	Low Voltage
MC	Closeing Coil
MC	Motor Control
MC	Mechanism Compartment
MO	Opening Coil
MO2	Trip Coil
MU	Undervoltage Coil
MV	Medium Voltage
NA	Not Applicable
NC	Normally Closed
NO	Normally Open
OC	Overcurrent
PCM	Phase Comparator Metering
PCS2	People Certification System
PG	Product Group
PSC	Primary Service Center
SCADA	Supervisory Control And Data Acquisition
SerDA	Service Resources Database
SF6	Sulfur hexafluoride
SI	Sectionalizer with LBS
SPC	Spare parts classification
SV	Sectionalizer with VCB
SWG	Switchgear
V	Vacuum circuit breaker
VCB	Vacuum Circuit Breaker
VDS	Voltage Detecting System
VIM	Voltage Indicator Module
VIS	Voltage Indication System
VPIS	Voltage Presence Indication Sytem
VT	Voltage Transformer

2. Recommended spare parts

	Product ID	Description	SPC	12-24	36	Air	Air-Plus	I&C	2 yrs	5 yrs
Cable Clamps and Support	2RAA039535A0001	Complete assembled adjustable cable support bar with 3 cable clamps LKHE, for 33-45mm2 cable, 12/24kV.	L2	•		•	•	•		
	2RAA039536A0001	Complete assembled adjustable cable support bar with 3 cable clamps LKHE, for 35-54mm2 cable, 12/24kV.	L2	•		•	•	•		
	2RAA036431A0001	Complete assembled adjustable cable support bar with 3 cable clamps LKHE, for 35-65mm2 cable, 12/24kV.	L2	•		•	•	•		
	2RAA039534A0001	Complete assembled adjustable cable support bar with 3 cable clamps LKHEB, for 24-38mm2 cable, 12/24kV.	L2	•		•	•	•		
	2RAA036431A0002	Complete assembled double adjustable cable support bar with 6 cable clamps LKHE, for 35-65mm2 cable, 12/24kV.	L2	•		•	•	•		
	2RAA033474A0002	Complete assembled double adjustable cable support bar with 6 cable clamps LKHE, for 50-76mm2 cable, 12/24kV.	L2	•		•	•	•		
	2RAA039538A0001	Complete assembled double adjustable cable support bar with 6 cable clamps LKHEB, for 24-38mm2 cable, 12/24kV.	L2	•		•	•	•		
	2RAA039533A0001	Complete assembled cable support bar with 3 cable clamps LKHE, for 35-54mm2 cable. Mounted on cable compartment floor 12/24kV.	L2	•		•	•	•		
	2RAA039532A0001	Complete assembled cable support bar with 3 cable clamps LKHEB, for 24-38mm2 cable. Mounted on cable compartment floor 12/24kV.	L2	•		•	•	•		
	2RAA037800A0001	Complete assembled cable support bar with 3 cable clamps LKHES, for 24-38mm2 cable. Mounted on cable compartment floor 12/24kV.	L2	•		•	•	•		
	2RAA039528A0001	Complete assembled adjustable cable support bar with 3 cable clamps LKHE, for 35-54mm2 cable, 36kV.	L2		•			•		
	2RAA039529A0001	Complete assembled double adjustable cable support bar with 6 cable clamps LKHE, for 35-54mm2 cable, 36kV.	L2		•			•		
	2RAA039531A0001	Complete assembled double adjustable cable support bar with 6 cable clamps LKHE, for 35-65mm2 cable, 36kV.	L2		•			•		
	2RAA034701A0003	Complete assembled cable support bar with 3 cable clamps LKHE, for 35-65mm2 cable. Mounted on side assembly, 36kV.	L2		•			•		
	2RAA039525A0001	Complete assembled cable support bar with 3 cable clamps LKHE, for 35-54mm2 cable. Mounted on cable compartment floor 36kV.	L2		•			•		
	2RAA039527A0001	Complete assembled cable support bar with 3 cable clamps LKHEB, for 24-38mm2 cable. Mounted on cable compartment floor 36kV	L2		•			•		
	2RAA033522A0002	Cable clamp LKHEB Ø24-Ø38 with mounting materials. 1 set of 3 pieces.	L2	•	•	•	•	•		
Closing Coil Y2	1VDC000014R0001	Closing coil Y2, 24V dc for following mechanism: 3PKSE C-module, 2PA V-module and 3PAE F-module. Spare coil only.	L2	•	•	•	•		•	•
	1VDC000014R0002	Closing coil Y2, 48V dc for following mechanism: 3PKSE C-module, 2PA V-module and 3PAE F-module. Spare coil only.	L2	•	•	•	•		•	•
	1VDC000014R0003	Closing coil Y2, 60V dc for following mechanism: 3PKSE C-module, 2PA V-module and 3PAE F-module. Spare coil only.	L2	•	•	•	•		•	•
	1VDC000014R0006	Closing coil Y2, 110V ac for following mechanism: 3PKSE C-module, 2PA V-module and 3PAE F-module. Spare coil only.	L2	•	•	•	•		•	•
	1VDC000014R0004	Closing coil Y2, 110V dc for following mechanism: 3PKSE C-module, 2PA V-module and 3PAE F-module. Spare coil only.	L2	•	•	•	•		•	•
	1VDC000014R0007	Closing coil Y2, 230V ac for following mechanism: 3PKSE C-module, 2PA V-module and 3PAE F-module. Spare coil only.	L2	•	•	•	•		•	•
	1VDC000014R0005	Closing coil Y2, 230V dc for following mechanism: 3PKSE C-module, 2PA V-module and 3PAE F-module. Spare coil only.	L2	•	•	•	•		•	•

	Product ID	Description	SPC	12-24	36	Air	Air-Plus	I&C	2 yrs	5 yrs
LV Component	3WAA040499P0001	Shunt test unit for surveillance of the tripping coil MO2.	L2	•	•	•	•	•		•
	1VDC000080R0006	Wieland plug 24-pin (male) with PE (Protection Earth) 16A.	L2	•	•	•	•	•		
	1VDC000080R0005	Wieland plug 6-pin (female) with PE (Protection Earth) 16A.	L2	•	•	•	•	•		
	1VDC000080R0004	Wieland plug 6-pin (male) with PE (Protection Earth) 16A.	L2	•	•	•	•	•		
Motor and Gear	49527	Motor 24-30V dc for EL2- and/or EL3-mechanism for V-module. Motor only.	L2	•	•		•	•	•	•
	49536	Motor 48-60V dc for EL2- and/or EL3-mechanism for V-module. Motor only.	L2	•	•			•	•	•
	49537	Motor 110-130V ac/dc for EL2- and/or EL3-mechanism for V-module. Motor only.	L2	•	•			•	•	•
	49552	Motor 220-250V ac/dc for EL2- and/or EL3-mechanism for V-module. Motor only.	L2	•	•			•	•	•
	2RBA016214A0001	Motor and gear, 24V dc for all modules. Not for EL2-mechanism and/or EL3-mechanism.	L2	•	•	•	•	•	•	•
	2RBA016214A0002	Motor and gear, 48V dc for all modules. Not for EL2-mechanism and/or EL3-mechanism.	L2	•	•	•	•	•	•	•
	2RBA016214A0003	Motor and gear, 60V dc for all modules. Not for EL2-mechanism and/or EL3-mechanism.	L2	•	•	•	•	•	•	•
	2RBA016214A0004	Motor and gear, 110V dc for all modules. Not for EL2-mechanism and/or EL3-mechanism.	L2	•	•	•	•	•	•	•
	2RBA016214A0005	Motor and gear, 230V dc for all modules. Not for EL2-mechanism and/or EL3-mechanism.	L2	•	•	•	•	•	•	•
Manometer	NHP 304769P0001	Gas pressure indicator without auxiliary switch for SF6.	L2	•	•				•	•
Opening Coil MO and Closing Coil MC for V-modules	1VDC001012R0001	Smart coil MO/MC 24V DC for EL2/EL2s/EL3-mechanism for V-module.	L2	•	•				•	•
	1VDC001012R0002	Smart coil MO/MC 48V DC for EL2/EL2s/EL3-mechanism for V-module.	L2	•	•				•	•
	1VDC001012R0003	Smart coil MO/MC 110V AC/DC for EL2/EL2s/EL3-mechanism for V-module.	L2	•	•				•	•
	1VDC001012R0004	Smart coil MO/MC 220-250V AC/DC for EL2/EL2s/EL3-mechanism for V-module.	L2	•	•				•	•
	1VDC001013R0001	Smart coil MO/MC/MU 24V DC for EL2/EL2s/EL3-mechanism for V-module.	L2	•	•				•	•
	1VDC001013R0002	Smart coil MO/MC/MU 48V DC for EL2/EL2s/EL3-mechanism for V-module.	L2	•	•				•	•
	1VDC001013R0003	Smart coil MO/MC/MU 110V AC/DC for EL2/EL2s/EL3-mechanism for V-module.	L2	•	•				•	•
	1VDC001013R0004	Smart coil MO/MC/MU 220-250V AC/DC for EL2/EL2s/EL3-mechanism for V-module.	L2	•	•				•	•

	Product ID	Description	SPC	12-24	36	Air	Air-Plus	I&C	2 yrs	5 yrs
Opening Coil Y1	1VDC000009R0001	Opening coil Y1, 24V dc for following mechanism: 3PKSE C-module, 2PA V-module and 3PAE F-module. Spare coil only.	L2	•	•	•	•		•	•
	1VDC000009R0002	Opening coil Y1, 48V dc for following mechanism: 3PKSE C-module, 2PA V-module and 3PAE F-module. Spare coil only.	L2	•	•	•	•		•	•
	1VDC000009R0003	Opening coil Y1, 60V dc for following mechanism: 3PKSE C-module, 2PA V-module and 3PAE F-module. Spare coil only.	L2	•	•	•	•		•	•
	1VDC000009R0006	Opening coil Y1, 110V ac for following mechanism: 3PKSE C-module, 2PA V-module and 3PAE F-module. Spare coil only.	L2	•	•	•	•		•	•
	1VDC000009R0004	Opening coil Y1, 110V dc for following mechanism: 3PKSE C-module, 2PA V-module and 3PAE F-module. Spare coil only.	L2	•	•	•	•		•	•
	1VDC000009R0007	Opening coil Y1, 230V ac for following mechanism: 3PKSE C-module, 2PA V-module and 3PAE F-module. Spare coil only.	L2	•	•	•	•		•	•
	1VDC000009R0005	Opening coil Y1, 230V dc for following mechanism: 3PKSE C-module, 2PA V-module and 3PAE F-module. Spare coil only.	L2	•	•	•	•		•	•
Operating Mechanism	NHP 101985R0002	2PA operation mechanism VCB for V-module.	L3	•				•	•	•
	2RAA021080A0001	2PA operation mechanism for V-module.	L3			•	•	•	•	•
	NHP 102003R0002	2PE operational mechanism ES for De-module.	L3	•					•	•
	2RAA004064A0001	2PE operation mechanism ES for De-module.	L3		•				•	•
	2RAA015321A0001	2PK operation mechanism for C-module.	L3			•	•		•	•
	NHP 101941R0002	3PAE operation mechanism FS/ES for F-module.	L3	•					•	•
	1VDP002217R0001	3PAE operation mechanism FS/ES for F-module.	L3		•				•	•
	NHP 101935R0002	3PKE operation mechanism LBS/ES for C-module and DC/ES for V-module.	L3	•		•	•		•	•
	1VDP001220R0001	3PKE operation mechanism LBS/ES for C-module and DC/ES for V-module.	L3		•				•	•
	NHP 102134R0002	3PKSE operation mechanism LBS/ES for C-module.	L3	•					•	•
REJ603	2RAA037758A0001	REJ603 V 1.5 with HMI display, installed on correct bracket and wires attached. For V-module with 2PA mechanism.	L2	•		•	•			•
	2RAA037759A0001	REJ603 V 1.5 without HMI display, installed on correct bracket and wires attached. For V-module with 2PA mechanism.	L2	•		•	•			•
	2RAA037756A0001	REJ603 V 1.5 without HMI display, installed on correct bracket and wires attached. For V-module with EL2 mechanism.	L2	•						•

	Product ID	Description	SPC	12-24	36	Air	Air-Plus	I&C	2 yrs	5 yrs
Relay Trip Coil for V-modules	1VDC000016R0001	Relay trip coil Y4, 24V dc for V-module. Spare coil only. Not for EL2-mechanism.	L2	•		•	•		•	•
	1VDC000016R0002	Relay trip coil Y4, 48V dc for V-module. Spare coil only. Not for EL2-mechanism.	L2	•		•	•		•	•
	1VDC000016R0003	Relay trip coil Y4, 60V dc for V-module. Spare coil only. Not for EL2-mechanism.	L2	•		•	•		•	•
	1VDC000016R0006	Relay trip coil Y4, 110V ac for V-module. Spare coil only. Not for EL2-mechanism.	L2	•		•	•		•	•
	1VDC000016R0004	Relay trip coil Y4, 110V dc for V-module. Spare coil only. Not for EL2-mechanism.	L2	•		•	•		•	•
	1VDC000016R0007	Relay trip coil Y4, 230V ac for V-module. Spare coil only. Not for EL2-mechanism.	L2	•		•	•		•	•
	1VDC000016R0005	Relay trip coil Y4, 230V dc for V-module. Spare coil only. Not for EL2-mechanism.	L2	•		•	•		•	•
	1VDC000018R0001	Relay trip coil Y6 for self power relay for V-module. Spare coil only. Not for EL2-mechanism.	L2	•		•	•		•	•
	2RAA021008A0001	Relay trip coil Y9 for EL2- and/or EL3-mechanism for V-module.	L2	•	•	•	•		•	•
Ronis	1VDC000038R0001	Complete kit for retrofitting a double ronis on earth switch.	L2	•	•	•	•	•	•	
Undervoltage Coil for V-modules - Kit	2RAA007910A0001	Undervoltage coil Y7, 24V dc without time delay.	L2	•		•	•		•	•
	2RAA007910A0002	Undervoltage coil Y7, 48V dc without time delay.	L2	•		•	•		•	•
	2RAA007910A0003	Undervoltage coil Y7, 60V dc without time delay.	L2	•		•	•		•	•
	2RAA007910A0004	Undervoltage coil Y7, 110V ac/dc without time delay.	L2	•		•	•		•	•
	2RAA007910A0005	Undervoltage coil Y7, 220-250V ac/dc without time delay.	L2	•		•	•		•	•
	2RAA021833A0001	Undervoltage coil Y7, 24V dc with electrical time delay.	L2	•		•	•		•	•
	2RAA021833A0002	Undervoltage coil Y7, 48V dc with electrical time delay.	L2	•		•	•		•	•
	2RAA021833A0003	Undervoltage coil Y7, 60V dc with electrical time delay.	L2	•		•	•		•	•
	2RAA021833A0004	Undervoltage coil Y7, 110V dc with electrical time delay.	L2	•		•	•		•	•
	2RAA021833A0005	Undervoltage coil Y7, 220V dc with electrical time delay.	L2	•		•	•		•	•
Voltage Indicator	NHSN708015P0001	HR VIM1 Capacitive voltage indicator.	L2	•	•	•			•	•
	NHP 201701R0001	HR VIM1 Capacitive voltage indicator.	L2	•	•	•			•	•
	3WAA029451P0001	Kries CAPDIS-S1+ VDS from 3 to 40,5kV. Integrated capacitive Voltage Detecting System (VDS).	L2	•	•	•	•		•	•
	3WAA021500P0001	Kries CAPDIS-S2+ from 3 to 40,5kV. Integrated capacitive Voltage Monitoring System with relay contacts.	L2	•	•	•	•		•	•

	Product ID	Description	SPC	12-24	36	Air	Air-Plus	I&C	2 yrs	5 yrs
Voltage Indicator Accessory	NHSN714021P0002	Phase comparator for type PCM for HR.	L2	•	•	•			•	•
	NHSN714021P0005	Phase comparator PCM for VPIS type.	L2	•	•	•	•		•	•
Voltage Present Indicator System (VPIS)	1VDC000034R0001	3-6kV VPIS kit C/F/De/D-modules,including VPIS unit, cables, bracket and fixing materials.	L3	•						•
	1VDC000034R0002	3-6kV VPIS kit V-modules, including VPIS unit, cables, bracket and fixing materials.	L3	•						•
	1VDC000034R0003	6-12kV VPIS kit C/F/De/D-modules,including VPIS unit, cables, bracket and fixing materials.	L3	•						•
	1VDC000034R0004	6-12kV VPIS kit V-modules, including VPIS unit, cables, bracket and fixing materials.	L3	•						•
	1VDC000034R0005	10-24kV VPIS kit C/F/De/D-modules, including VPIS unit, cables, bracket and fixing materials.	L3	•						•
	1VDC000034R0006	10-24kV VPIS kit V-modules,including VPIS unit, cables, bracket and fixing materials.	L3	•						•
	3WAA037188P0001	VPIS (standard) indicator only, for C/CB/D/De/F/V-modules. Voltage range: 3-6kV.	L2	•		•			•	•
	3WAA037198P0001	VPIS (standard) indicator only, for C/CB/D/De/F/V-modules. Voltage range: 6-12kV.	L2	•		•			•	•
	3WAA037210P0001	VPIS (standard) indicator only, for C/CB/D/De/F/V-modules. Voltage range: 10-24kV.	L2	•	•	•	•		•	•
	3WAA037222P0001	VPIS (standard) indicator only, for C/CB/D/De/F/V-modules. Voltage range: 24-40,5kV.	L2	•	•				•	•
	3WAA037223P0001	VPIS (standard) indicator only, for C/V-modules. Voltage range: 13,8-24kV.	L2				•		•	•
	3WAA037224P0001	VPIS (standard) indicator only, for C/D/De/V-modules. Voltage range: 30.5-40.5kV.	L2		•				•	•

3. Spare parts

3.1 Auxiliary Contactor

3.1.1 Contactor

Pictures in BOL	Product ID	Catalog Description	SPC	1 2-24	36	Air	AirPlus
•	GJL1211001R8100	B6-30-10-80 MINI CONTACTOR 230V AC	L2	•	•	•	•
•	GJL1213001R0011	BC6-30-01-01 MINI CONTACTOR 24V DC	L2	•	•	•	•
•	GJL1213001R0013	BC6-30-01-03 MINI CONTACTOR 60V DC	L2	•	•	•	•
•	GJL1213001R0014	BC6-30-01-04 MINI CONTACTOR 110V DC	L2	•	•	•	•
•	GJL1213001R0015	BC6-30-01-05 MINI CONTACTOR 220V DC	L2	•	•	•	•
•	GJL1213001R1016	BC6-30-01-16 MINI CONTACTOR 48V DC	L2	•	•	•	•
•	GJL1213001R0101	BC6-30-10-01 MINI CONTACTOR 24V DC	L2	•	•	•	•
•	GJL1213001R0103	BC6-30-10-03 MINI CONTACTOR 60V DC	L2	•	•	•	•
•	GJL1213001R0104	BC6-30-10-04 MINI CONTACTOR 110V DC	L2	•	•	•	•
•	GJL1213001R0105	BC6-30-10-05 MINI CONTACTOR 220V DC	L2	•	•	•	•
•	GJL1213001R1106	BC6-30-10-16 MINI CONTACTOR 48V DC	L2	•	•	•	•
•	NHSN716001P0001	SURGE ARRESTER, 24-48V AC/DC	L2	•	•	•	•
•	NHSN716001P0006	SURGE ARRESTER, 60-230V AC/DC	L2	•	•	•	•

3.1.2 Accessory - Auxilliary Contactor

•	3WAA007696P0001	COM3TP ELECTRICAL TIME DELAY	L2	•		•	•

3.2 Auxiliary Contacts

3.2.1 Auxiliary Switch

Pictures in BOL	Product ID	Catalog Description	SPC	1 2-24	36	Air	AirPlus
•	1VDC000022R0001	C/F AUXILIARY SWITCH S7/S10, LBS/ES	L2	•		•	•
•	1VDC000020R0001	F/V AUX.SWITCH S6, CHARGED SPRING	L2	•		•	•
•	1VDC000023R0001	F/V AUXILIARY SWITCH S8, CHARGED SPRING	L2	•		•	•
•	1VDC000024R0001	F AUXILIARY SWITCH S9, FUSE BLOWN	L2	•			
•	1VDC000019R0001	V AUX.SWITCH S5/S7/S10, VCB/DC/ES	L2	•		•	•
•	1VDC000019R0002	V AUX.SWITCH S5, VCB	L2	•		•	•
•	1VDC000025R0001	V AUXILIARY SWITCH S9, RELAY TRIPPED	L2	•		•	•
•	1VDC000028R0001	AUXILIARY SWITCH, S13	L2	•		•	•
•	1VDC000030R0001	AUXILIARY SWITCH, S15	L2	•	•	•	•
•	2RAA007905A0001	AUXILIARY SWITCH EL3 MEC 36	L2		•		
•	NZN 000859P0011	AUXILIARY SWITCH, 1NO+1NC ONLY	L2	•	•	•	•
•	2CDS200912R0001	AUXILIARY CONTACT S2C-H6R	L2		•		
	2RAA027737A0001	MX18 - AUX.SWITCHES S7 AND S10 - MC	L2	•		•	•
	2RAA036557A0001	S5 WIRE HARNESS , SR/SP 12/24, LV PLUG-I	L2	•		•	•

3.2.2 Accessory - Auxilliary Contacts

•	2RAA008692A0001	CONTACT FOR CLOSING SPRING ASY	L2	•	•		

3.3 Bushing and Busbar

3.3.1 Busbar

Pictures in BOL	Product ID	Catalog Description	SPC	1 2-24	36	Air	AirPlus
•	NHSN620024P0226	BUSBAR, LENGTH 226MM	L2	•			
•	NHSN620024P0364	BUSBAR, LENGTH 364MM	L2	•		•	•
•	NHSN620024P0416	BUSBAR, LENGTH 416MM	L2	•			
•	NHSN620024P0554	BUSBAR, LENGTH 554MM	L2	•		•	•
•	NHSN620024P0686	BUSBAR, LENGTH 686MM	L2	•		•	•
•	NHSN620024P0826	BUSBAR, LENGTH 826MM	L2	•		•	•
•	NHSN620024P0002	BUSBAR CROSS ADAPTER	L2	•		•	•
•	NHSN620024P0001	BUSBAR END ADAPTER	L2	•		•	•
•	NHP 304691P0001	BUSBAR METERING MODULE 36KV	L2	•		•	•
•	3WAA011022P0001	COUPLING CONNECTOR FOR BUSBAR	L2		•		
•	NHSN620024P0103	DEAD END PLUG, SIDE EXTENSION	L2	•			
•	NHSN620024P0101	END PIECE COUPLING CONNECTOR	L2	•			

3.3.2 Bushing Connection for M-modules

•	2RAA029962P0001	ANGLE , METERING MODULE 24kV	L2	•			
•	NHP 304665P0001	ANGLE METERING MODULE	L2	•		•	•
•	NHP 201642P0001	CONNECTION L1 LEFT METERING MODULE	L2	•		•	•
•	NHP 102084P0001	CONNECTION L1 RIGHT METERING MODULE	L2	•		•	•
•	2RAA030180A0001	CONNECTION L2 LEFT W/CRIMP SLEEVE	L2	•		•	•
•	NHP 102085P0001	CONNECTION L2 RIGHT METERING MODULE	L2	•		•	•
•	NHP 201644P0001	CONNECTION L3 LEFT METERING MODULE	L2	•		•	•
•	NHP 102086P0001	CONNECTION L3 RIGHT METERING MODULE	L2	•		•	•
•	NHP 407998P0001	FIELD CONTROLLER BUSHING METERING MOD.	L2	•			
•	3WAA012492P0382	KUVAG INSULATOR SGA36N K382	L2		•		

3.3.3 Bushing Electrical

	1VDC000075R0001	BUSHING 200 SERIES 12/24kV, PLUG	L3	•			
	1VDC000074R0002	BUSHING 400 SERIES 12/24kV, PLUG	L3	•			
•	1VDC000074R0001	BUSHING 400 SERIES 12/24kV, BOLT	L3	•			
•	1VDC001021R0001	BUSHING 400 SERIES IEC 36kV, BOLT	L3		•		
	1VDC001521R0001	BUSHING 400 SERIES AIR, BOLT	L3			•	
•	1VDC001022R0001	BUSHING 600 SERIES IEEE 36kV, BOLT	L3		•		
	1VDC001521R0002	BUSHING 600 SERIES IEEE AIRPLUS, BOLT	L3				•
	1VDC001023R0001	BUSHING COMBISENSOR KEVCY 36	L3		•		
	1VDC001023R0002	BUSHING COMBISENSOR KEVCY 40,5	L3		•		
	1VDC000076R0001	BUSHING W/COMBISENSOR KEVCY 24	L3	•			
	1VDC001025R0001	BUSHING IEC SIDE CONNECTION COMPLETE, 36	L3		•		
•	1VDC001024R0001	BUSHING IEEE SIDE CONNECTION CPL.	L3		•		
•	1VDP003136R0001	BUSHING METERING MODULE	L3	•		•	•
	1VDC000077R0001	BUSHING SIDE CONNECTION 400 THREAD CPL.	L3	•			
	1VDC000078R0001	BUSHING TOP CONNECTION 400 THREAD	L3	•			
•	NHSN640007P0002	DEAD END RECEPTABLE (3 X M400DR-B/G)	L2	•	•	•	
•	1VDP002842R0001	DIRECT BUSBAR CONNECTION CPL.	L3		•		

3.3.4 Bushing Mechanical

Pictures in BOL	Product ID	Catalog Description	SPC	1 2-24	36	Air	AirPlus
•	1VDP000996R0001	MECHANICAL BUSHING, CFE	L3	•			
•	1VDP001389R0001	MECHANICAL BUSHING LBS, 36	L3		•		

3.3.5 MV Cable for CT

•	2RAA009848A0001	Connection Cable, 36M-Module	L2		•		

3.3.6 Top Cover

•	NHP 304652P0001	CONNECTING PROFILE BUSBAR COVER 12/24	L2	•		•	•
•	NHP 201645P0001	COVER EXTERNAL BUSBAR , SAFEPLUS 12/24	L2	•		•	•
•	NHP 201632P0001	COVER EXTERNAL BUS BAR 2MOD.	L2	•		•	•
•	NHP 304651P0001	END PLATE EXTERNAL BUSBAR COVER 12/24	L2	•		•	•
•	NHP 304667P0001	MOUNTING PROFILE, 1 MODULE BUSBAR COVER	L2	•		•	•
•	NHP 304920P0001	MOUNTING PROFILE, 2 MODULE BUSBAR COVER	L2	•		•	•

3.3.7 Accessory - Bushing and Busbar

•	NHP 408010P0001	24KV SPACER EXTERNAL BUSBAR L=38MM	L2	•		•	•
	1VDC000031R0004	BAG 4 - JOINING SET FIXING MATERIAL	L2	•		•	•
•	1VDP000145P0001	DISTANCE CB-CB, STANDARD-CB	L2	•		•	•
•	NHP 304588P0001	DISTANCE CB-STANDARD, STANDARD-STANDARD	L2	•		•	•
•	1VDP000147P0001	DISTANCE METERING-CB	L2	•		•	•
•	NHP 304633P0001	DISTANCE STANDARD-METERING, CB-METERING	L2	•		•	•
	NHSN620024P0203	DUMMY CABLE CONNECTOR SIZE 2	L2		•		
•	1VDP000872R0001	EXTENSION BLIND,SIDE EXTENSION	L2	•			
•	2RAA005432A0001	EXTENSION KIT , 36KV MODULE EX	L2		•		
•	NHP 304641P0001	SAFE+-MF DISTANCE PLATE RIGHT	L2	•		•	•

3.4 Cable Compartment

3.4.1 Arc Proof Cable Cover

Pictures in BOL	Product ID	Catalog Description	SPC	1 2-24	36	Air	AirPlus
•	2RAA004091A0001	36KV ARC PROOF CABLE COVER C-MODULE	L2		•		
•	2RAA004091A0002	36KV ARC PROOF CABLE COVER V-/F-MODULE	L2		•		
•	2RAA009018A0001	36KV CABLE COVER LOW, ARC PROF C-MODULE	L2		•		
•	1VDP000102R0001	ARC PROOF CABLE COVER	L2	•		•	•

3.4.2 Arc Proof Cable Compartment

	2RAA044012P0001	ARC ARBSORBER 1-MOD ARC PROOF CABLE COMP	L3	•		•	•
•	2RAA004081P0001	ARC ABSORBER ARC PROOF CABLE LEFT	L3		•		
•	2RAA004104P0001	ARC ABSORBER ARC PROOF CABLE MIDDLE	L3		•		
•	2RAA004085P0001	ARC ABSORBER ARC PROOF CABLE RIGHT	L3		•		
	2RAA043942P0001	ARC ARBSORBER LEFT , ARC PROOF CABLE COM	L3	•		•	•
	2RAA043943P0001	ARC ARBSORBER MID , ARC PROOF CABLE COMP	L3	•		•	•
	2RAA043944P0001	ARC ARBSORBER RIGHT , ARC PROOF CABLE CO	L3	•		•	•
•	2RAA005843A0002	ARC PROOF CBL. COMP. ASM. , A	L3		•		
•	1VDP000083P0001	ARC PROOF PROFILE CABLE COMP. LEFT	L3	•		•	•
•	1VDP000082P0001	ARC PROOF PROFILE CABLE COMP. RIGHT	L3	•		•	•

3.4.3 Arc Proof Accessory

•	2RAA004082P0001	INSULATING PLATE , ARC PROOF C	L3		•		
•	1VDP000108P0001	PARTITION WALL ARC PROOF CABLE COMP.	L3	•		•	•

3.4.3 Cable Clamps ans Support

	2RAA039535A0001	24 ADJ. CABLE BRACKET W/LKHE 33-45	L2	•		•	•
	2RAA039536A0001	24 ADJ. CABLE BRACKET W/LKHE 35-54	L2	•		•	•
	2RAA036431A0001	24 ADJ. CABLE BRACKET W/LKHE 35-65	L2	•		•	•
•	2RAA033474A0001	24 ADJ. CABLE BRACKET W/LKHE 50-76	L2	•		•	•
	2RAA039534A0001	24 ADJ. CABLE BRACKET W/LKHEB 24-38	L2	•		•	•
•	2RAA036431A0002	24 DBL. ADJ. CABLE BRACKET W/LKHE 35-65	L2	•		•	•
	2RAA033474A0002	24 DBL. ADJ. CABLE BRACKET W/LKHE 50-76	L2	•		•	•
	2RAA039538A0001	24 DBL. ADJ. CABLE BRACKET W/LKHEB 24-38	L2	•		•	•
	2RAA039533A0001	24 CABLE BRACKET W/LKHE 35-54	L2	•		•	•
	2RAA039532A0001	24 CABLE BRACKET W//LKHEB 24-38	L2	•		•	•
	2RAA037800A0001	24 CABLE SUPPORT STD. ASM W/LKHES 24-38	L2	•		•	•
•	2RAA039528A0001	36 ADJ. CABLE BRACKET W/LKHE 35-54	L2		•		
	2RAA039529A0001	36 DBL. ADJ. CABLE BRACKET W/LKHE 35-54	L2		•		
	2RAA039531A0001	36 DBL. ADJ. CABLE BRACKET W/LKHE 35-65	L2		•		
	2RAA034701A0003	36 CABLE BRACKET SIDE ASM W/LKHE 35-65	L2		•		
	2RAA039525A0001	36 CABLE BRACKET W/LKHE 35-54	L2		•		
•	2RAA039527A0001	36 FIXED CABLE BRACKET W/LKHEB 24-38	L2		•		
•	NHP 406795R0001	CABLE CLAMP ASM. Ø20 - Ø40	L2	•			
•	NHP 406796R0001	CABLE CLAMP ASM. Ø35 - Ø60	L2	•			

3.4.3 Cable Clamps ans Support cont.

Pictures in BOL	Product ID	Catalog Description	SPC	1 2-24	36	Air	AirPlus
•	2RAA036432A0001	CABLE CLAMP LKHEB 35-65 COMPLETE	L2	•	•	•	•
•	2RAA033522A0001	CABLE CLAMP LKHEB 50-76 W/80 SCREW 1PC	L2	•	•	•	•
	2RAA033522A0002	CABLE CLAMP LKHEB 50-76 W/100 SCREW 1PC	L2	•	•	•	•
•	2RAA023733A0001	CABLE CLAMPS LKHEB 33-45 COMPLETE	L2	•	•	•	•
•	1VDP002764R0001	CABLE CLAMPS LKHEB 35-54 COMPLETE	L2	•	•	•	•
•	2RAA021727A0001	CABLE CLAMPS LKHES 24-38 COMPLETE	L2	•	•	•	•
	2RAA042627A0001	CABLE SUPPORT FLOOR 3-MOD W/LKHES 28-34	L2	•			
	2RAA042627A0002	CABLE SUPPORT FLOOR 4-MOD W/LKHES 28-34	L2	•			

3.4.5 Cable Compartment

•	1VDP000189P0001	24KV INSULATING PLATE CABLE COMPARTMENT	L3	•		•	•
•	2RAA022225P0001	24KV SUPPORTBRACKET KOKM 1EB8-V1	L2	•		•	•
•	1VDP000181P0001	FRONTPROFIL	L2	•		•	•
•	NHP 304557R0001	PARTITION WALL CABLE COMPARTMENT 12/24	L3	•		•	•
•	1VDP000137P0001	PLINTH 2 MOD, EXTERNAL ARRANGEMENT	L3	•			
•	NHP 304531R0001	SAFE0 BRACKET METERING TRANSF. KPL	L2	•		•	•
•	NHP 304713R0002	SUPPLEMENTING PROFILE LEFT	L3	•		•	•
•	NHP 304713R0001	SUPPLEMENTING PROFILE RIGHT	L3	•		•	•

3.4.6 Cable Compartment Cable Entry

•	2RAA025980P0001	36KV GLAND PLATE Ø76MM	L2		•		
•	2RAA025978P0001	36KV GLAND PLATE DUAL CABLE COVER	L2		•		
•	2RAA025981P0001	36KV GLAND PLATE END COVER	L2		•		

3.4.7 Cable Cover

•	2RAA024428A0001	24KV CB MODULE CABLE COVER EXTENDED	L2	•			
•	2RAA009018A0002	36KV CABLE COVER LOW F/V-MODULE	L2		•		
•	2RAA007899A0001	36KV DOUBLE CABLE COVER - V/F	L2		•		
•	NHP 304643R0001	BASIC DOOR METERING MODULE	L2	•		•	•
•	NHP 304721R0001	CABLE COMPARTMENT ASSEMBLY	L2	•		•	•
•	1VDP002010P0001	CABLE COVER C-MODULE, 36	L2		•		
•	1VDP002030P0001	CABLE COVER F/V MODULE, 36	L2		•		
•	NHP 304528R0001	CABLE COVER STANDARD	L2	•		•	•
•	NHP 304527R0001	CABLE COVER W. WINDOW COMPL	L2	•		•	•
•	1VDP000144P0001	CABLE DOOR CB MODULE	L2	•			

3.4.8 Earthing Connection

Pictures in BOL	Product ID	Catalog Description	SPC	1 2-24	36	Air	AirPlus
•	2RAA027706A0003	EARTHING HIGH C-MODULE EXTENDED , CABLE	L3		•		
•	2RAA027706A0002	EARTHING HIGH V-MODULE, CABLE COMP.36kV	L3		•		
•	NHP 305008R0002	EXTENSION KIT, EARTH, RIGHT	L2	•		•	•
•	2RAA005238A0001	MAIN EARTHING EXTENSION , 36KV	L2		•		

3.4.9 Gland Plate

•	2RAA038377A0001	24KV GLAND PLATE COVER KIT	L2	•			
•	2RAA025977A0001	36KV GLAND PLATE ASSEMBLY	L2		•		
•	2RAA022708A0001	GLAND PLATE 1 MOD STD , ASSM. SAFEO+	L2		•		
•	2RAA022708A0002	GLAND PLATE 2 MOD STD , SAFERING / SAFEP	L2	•		•	•
•	2RAA022708A0003	GLAND PLATE 3 MOD STD , SAFERING / SAFEP	L2	•		•	•
•	2RAA022708A0004	GLAND PLATE 4 MOD STD , SAFERING / SAFEP	L2	•		•	•
•	2RAA022708A0005	GLAND PLATE 5 MOD STD , SAFEO/SAFE+ ASSM	L2	•		•	•
•	2RAA022070P0001	GLANDPLATE 1 MODULE STD , SAFERING /SAF+	L2	•			
•	2RAA022070P0002	GLANDPLATE 2 MODULE STD D= 656, SAFEO/+	L2	•			
•	2RAA022070P0003	GLANDPLATE 3 MODULE STD D= 656, SAFEO/+	L2	•			
•	2RAA022070P0004	GLANDPLATE 4 MODULE STD D= 656, SAFEO/+	L2	•			
•	2RAA022070P0005	GLANDPLATE 5 MODULE STD , SAFERING /SAF+	L2	•			

3.4.10 Rear Wall

•	2RAA015652P0001	BACK WALL F/V MODULE , SIDE CONNECTION 3	L2		•		

3.4.11 Accessory - Cable Compartment

•	NHP 304623P0001	LOWER PROFILE METERING MODULE	L2	•		•	•
•	NHSN640010P0076	RUBBER CONES MC/76	L2	•			
•	2RAA029980P0001	SAFETY PLATE FRONT METERING MODULE 24	L2	•			
•	2RAA029981P0001	SAFETY PLATE SIDE , METERING MODULE 24	L2	•			
•	3WAA017505P0001	WATER SENSOR LS-3	L3		•		

3.5 Closing Coil

3.5.1 Closing Coil MC for V-modules

Pictures in BOL	Product ID	Catalog Description	SPC	1 2-24	36	Air	AirPlus
	2RAA037894A0001	CLOSING COIL MC 24V DC	L2	•	•		
	2RAA037894A0003	CLOSING COIL MC 48V AC/DC	L2	•	•		
	2RAA037894A0005	CLOSING COIL MC 110-127V AC/DC	L2	•	•		
	2RAA037894A0006	CLOSING COIL MC 220-250V AC/DC	L2	•	•		

3.5.2 Closing Coil Y2

•	1VDC000014R0001	C/F/V CLOSING COIL Y2, 24V DC	L2	•	•	•	•
•	1VDC000014R0002	C/F/V CLOSING COIL Y2, 48V DC	L2	•	•	•	•
•	1VDC000014R0003	C/F/V CLOSING COIL Y2, 60V DC	L2	•	•	•	•
•	1VDC000014R0006	C/F/V CLOSING COIL Y2, 110V AC	L2	•	•	•	•
•	1VDC000014R0004	C/F/V CLOSING COIL Y2, 110V DC	L2	•	•	•	•
•	1VDC000014R0007	C/F/V CLOSING COIL Y2, 230V AC	L2	•	•	•	•
•	1VDC000014R0005	C/F/V CLOSING COIL Y2, 230V DC	L2	•	•	•	•

3.6 Counter

3.6.1 Counter

Pictures in BOL	Product ID	Catalog Description	SPC	1 2-24	36	Air	AirPlus
•	3WAA009447P0001	EL2/EL2-S/EL3 COUNTER	L2	•	•		

3.7 Cover and Frames

3.7.1 Arc Proof Base Frame

Pictures in BOL	Product ID	Catalog Description	SPC	1 2-24	36	Air	AirPlus
•	NHP 201670R0006	BASE FRAME 290, 1 MODULE ARC PROOF	L2	•		•	•
•	NHP 201670R0007	BASE FRAME 290, 2 MODULE ARC PROOF	L2	•		•	•
•	NHP 201670R0008	BASE FRAME 290, 3 MODULE ARC PROOF	L2	•		•	•
•	NHP 201670R0009	BASE FRAME 290, 4 MODULE ARC PROOF	L2	•		•	•
•	NHP 201670R0010	BASE FRAME 290, 5 MODULE ARC PROOF	L2	•		•	•
•	NHP 201531R0006	BASE FRAME 450, 1 MODULE ARC PROOF	L2	•		•	•
•	NHP 201531R0007	BASE FRAME 450, 2 MODULE ARC PROOF	L2	•		•	•
•	NHP 201531R0008	BASE FRAME 450, 3 MODULE ARC PROOF	L2	•		•	•
•	NHP 201531R0009	BASE FRAME 450, 4 MODULE ARC PROOF	L2	•		•	•
•	NHP 201531R0010	BASE FRAME 450, 5 MODULE ARC PROOF	L2	•		•	•

3.7.2 Arc Proof Accessory

•	2RAA010351A0002	ARC CHANNEL C , SAFERING / SAFEPLUS 36	L2		•		
•	2RAA010351A0001	ARC CHANNEL F/V , SAFERING / SAFEPLUS 36	L2		•		

3.7.3 Base Frame

•	2RAA031178P0002	36KV MEBB BRACKET BASE FRAME LEFT	L2		•		
•	2RAA031178P0001	36KV MEBB BRACKET BASE FRAME RIGHT	L2		•		
	2RAA039504A0003	BASE FRAME 150, 3 MODULE , SAFERING/SAFE	L2	•		•	•
•	NHP 201670R0001	BASE FRAME 290, 1 MODULE	L2	•		•	•
•	NHP 201670R0002	BASE FRAME 290, 2 MODULE	L2	•		•	•
•	NHP 201670R0003	BASE FRAME 290, 3 MODULE	L2	•		•	•
•	NHP 201670R0004	BASE FRAME 290, 4 MODULE	L2	•		•	•
•	NHP 201670R0005	BASE FRAME 290, 5 MODULE	L2	•		•	•
•	NHP 201531R0001	BASE FRAME 450, 1 MODULE	L2	•		•	•
•	NHP 201531R0002	BASE FRAME 450, 2 MODULE	L2	•		•	•
•	NHP 201531R0003	BASE FRAME 450, 3 MODULE	L2	•		•	•
•	NHP 201531R0004	BASE FRAME 450, 4 MODULE	L2	•		•	•
•	NHP 201531R0005	BASE FRAME 450, 5 MODULE	L2	•		•	•

3.7.4 Floor Fixation

•	NHP 304228P0001	FLOOR FIXATION 12/24	L2	•		•	•

3.7.5 Front Cover Lower

•	2RAA033684A0001	C/V LOWER FRONT PANEL AND MIMIC	L2			•	•
•	2RAA033686A0001	D LOWER FRONT PANEL AND MIMIC	L2			•	•
•	2RAA015319A0001	FRONT COVER ASSEMBLED , V-MODULE 36KV	L2		•		
•	2RAA030765A0001	FRONT COVER ASSEMBLED, ENA , V PANEL 36K	L2		•		
•	2RAA015320A0001	FRONT COVER W/EARTH YELLOW/GREEN ASS, V	L2		•		

3.7.6 Front Cover Upper

Pictures in BOL	Product ID	Catalog Description	SPC	1 2-24	36	Air	AirPlus
•	2RAA033583A0001	C UPPER FRONT PANEL AND MIMIC	L2			•	•
•	2RAA033685A0001	D UPPER FRONT PANEL AND MIMIC	L2			•	•
•	1VDC001030R0002	V PANEL W/ DOUBLE PADLOCK, 36	L2		•		
•	1VDC001030R0001	V PANEL W/ MANUAL PADLOCK, 36	L2		•		
•	1VDC001030R0003	V PANEL W/ SINGLE PADLOCK, 36	L2		•		
•	2RAA033682A0001	V UPPER FRONT PANEL AND MIMIC	L2		•		
•	2RAA033683A0001	V UPPER FRONT PANEL AND MIMIC, REJ603	L2		•		
•	1VDC000073R0002	V UPPER PANEL W/ DOUBLE PADLOCK	L2		•		
•	1VDC000073R0001	V UPPER PANEL W/ MANUAL PADLOCK	L2		•		
•	1VDC000073R0003	V UPPER PANEL W/ SINGLE PADLOCK	L2	•			
•	2RAA032226A0001	EL 2/3 FRONT COVER DOUBLE PADLOCK	L2		•		
•	2RAA032226A0002	EL 2/3 FRONT COVER SINGLE PADLOCK	L2		•		
•	2RAA032076P0001	EL FRONT COVER V MODULE , MECHANISM ROOM	L2		•		
•	2RAA015339A0001	FRONT COVER ASSEMBLED , D-MODULE 36 KV	L2	•			
•	2RAA015340A0001	FRONT COVER ASSEMBLED , DE-MODULE 36 KV	L2	•			
•	2RAA015345A0001	FRONT COVER ASSEMBLED , F-MODULE 36 KV	L2	•			
•	2RAA030811A0001	FRONT COVER ASSEMBLED, ENA , C PANEL 36	L2			•	•
•	2RAA030764A0001	FRONT COVER ASSEMBLED, ENA , DE PANEL 36	L2			•	•
•	2RAA015335A0001	FRONT COVER MECHANISM ROOM ASSEMBLED , C	L2	•	•		
•	2RAA015336A0001	FRONT COVER W/EARTH YELLOW/GREEN ASS, C	L2	•	•		
•	2RAA015341A0001	FRONT COVER W/EARTH YELLOW/GREEN ASS, De	L2	•	•		
•	2RAA015347A0001	FRONT COVER W/EARTH YELLOW/GREEN ASS, F	L2		•		
•	2RAA035899A0001	IP3X COVER C-MODULE ASM , SAFERING/SAFEP	L2		•		
•	2RAA035902A0001	IP3X COVER V-MODULE ASM , SAFERING/SAFEP	L2		•		
•	1VDP000237P0001	PANEL,EXSTERNAL ARRANGEMENT	L2		•		

3.7.7 LV Box Front Cover

•	2RAA006160P0006	36KV DOOR, REF 610, AMP,2 SW LS-BOX HIGH	L2		•		
•	2RAA008437P0005	36KV DOOR REF 610 LS-BOX LOW	L2		•		
•	2RAA008437P0001	36KV DOOR STANDARD SW LS-BOX LOW	L2		•		
•	2RAA007089P0001	36KV FRONT COVER LS-BOX WO HINGES	L2		•		
	1VDP000384P0001	COVER PANEL LOW VOLTAGE BOX	L2	•		•	•
•	NHP 304747R0001	DOOR 430 COMPLETE	L2	•		•	•
•	2RAA008047A0001	DOOR RE_61_ COMPLETE , LOW VOLTAGE CAB	L2	•		•	•
•	NHP 304747R0010	DOOR REJ 525 COMPLETE	L2	•		•	•
•	2RAA008041A0001	DOOR SPA_1/HR COMPLETE, LOW VOLTAGE CABI	L2	•		•	•
•	2RAA007089P0002	FRONT COVER REJ 603 , LOW VOLT	L2		•		
•	NHP 408053R0001	PANEL LOCK MOUNTED	L2	•	•	•	•

3.7.8 LV Compartment

•	2RAA029849A0001	24KV LV-COMPARTMENT 1-MOD. H=800	L2	•			
•	2RAA029849A0002	24KV LV-COMPARTMENT 2-MOD. H=800	L2	•			
•	2RAA029849A0003	24KV LV-COMPARTMENT 3-MOD. H=800	L2	•			
•	2RAA029849A0004	24KV LV-COMPARTMENT 4-MOD. H=800	L2	•			
•	2RAA029849A0005	24KV LV-COMPARTMENT 5-MOD. H=800	L2	•			

3.7.8 LV Compartment cont.

Pictures in BOL	Product ID	Catalog Description	SPC	1 2-24	36	Air	AirPlus
•	2RAA022064A0001	36KV LOW VOLTAGE BOX	L2		•		
•	2RAA022063A0001	36KV LOW VOLTAGE CABINET HIGH	L2		•		
•	NHP 407993P0001	ANSLAGSPROFIL CSG BOKS	L2	•		•	•
•	NHP 407992P0001	HINGE PROFILE	L2	•		•	•
•	1VDP000503P0001	HINGE PROFILE H=660,LOW VOLTAG	L2	•		•	•
•	NHP 102066R0001	LOW VOLTAGE COMPARTMENT H470 1 MODULE	L2	•		•	•
•	NHP 102066R0002	LOW VOLTAGE COMPARTMENT H470 2 MODULE	L2	•		•	•
•	NHP 102066R0003	LOW VOLTAGE COMPARTMENT H470 3 MODULE	L2	•		•	•
•	NHP 102066R0004	LOW VOLTAGE COMPARTMENT H470 4 MODULE	L2	•		•	•
•	NHP 102066R0005	LOW VOLTAGE COMPARTMENT H470 5 MODULE	L2	•		•	•
•	1VDP000454R0001	TOP ENTRY BOX 1 MODULE	L2	•		•	•
•	1VDP000455R0001	TOP ENTRY BOX 2 MODULE	L2	•		•	•
•	1VDP000385R0001	TOP ENTRY BOX 3 MODULE	L2	•		•	•
•	1VDP000456R0001	TOP ENTRY BOX 4 MODULE 12/24	L2	•		•	•
•	1VDP000457R0001	TOP ENTRY BOX 5 MODULE 12/24	L2	•		•	•

3.7.9 LV Top Cover

•	NHP 304546P0001	TOP COVER 1 MODULE	L2	•		•	•
•	NHP 304547P0001	TOP COVER 2 MODULE	L2	•		•	•
•	NHP 304548P0001	TOP COVER 3 MODULE	L2	•		•	•
•	NHP 304549P0001	TOP COVER 4 MODULE	L2	•		•	•
•	NHP 304550P0001	TOP COVER 5 MODULE	L2	•		•	•
•	2RAA030494P0002	TOPCOVER 2 MODULE FOR ARC CHANNEL 36	L2		•		
•	2RAA030494P0003	TOPCOVER 3 MODULE FOR ARC CHANNEL 36	L2		•		
•	2RAA030494P0004	TOPCOVER 4 MODULE FOR ARC CHANNEL 36	L2		•		

3.7.10 Rear Wall

•	2RAA007320P0001	REAR WALL 1 MOD	L2	•	•	•	•
•	1VDP000202P0001	REAR WALL 2 MOD	L2	•		•	•
•	1VDP000203P0001	REAR WALL 3 MOD	L2	•		•	•
•	1VDP000458P0001	REAR WALL 4 MOD	L2	•		•	•
•	2RAA025523A0001	REAR WALL 5 MOD ASSEMBLED , EXTERNAL ARR	L2	•		•	•

3.7.11 Side Cover

•	2RAA020758A0001	COVER F/V MODULE , LEFT SIDE CONN. 12/24	L2	•			
•	2RAA020758A0002	COVER F/V MODULE , RIGHT SIDE CONN.12/24	L2	•			
•	2RAA011072P0001	COVER PLATE F-MODULE , CABLE COMPARTMENT	L2		•		
•	2RAA025318P0002	FRONT PANEL , SIDE CONNECTION 36KV IEEE	L2		•		

3.7.12 Side Wall

Pictures in BOL	Product ID	Catalog Description	SPC	1 2-24	36	Air	AirPlus
•	2RAA008040P0002	36KV SIDEWALL LEFT FOR EXTENSION	L2		•		
•	2RAA008035P0002	36KV SIDEWALL RIGHT FOR EXTENSION	L2		•		
•	2RAA008040P0001	SIDEWALL LEFT SAFERING / SAFEPLUS 36	L2		•		
•	2RAA008712P0001	SIDEWALL LEFT SIDE CONNECTION 36	L2		•		
•	1VDP002394P0001	SIDE WALL LEFT 36KV MECH. ROOM C-MODULE	L3		•		
•	NHP 201511P0001	SIDE WALL- LEFT SAFERING / SAFEPLUS	L3	•		•	•
•	2RAA008035P0001	SIDEWALL RIGHT SAFERING / SAFEPLUS 36	L2		•		
•	2RAA009029P0001	SIDEWALL RIGHT SIDE CONNECTION 36	L2		•		
•	2RAA008035P0003	SIDEWALL RIGHT W/WIELAND CUT OUT , SAFER	L2		•		
•	1VDP002393P0001	SIDE WALL RIGHT 36KV MECH. ROOM C-MODULE	L3		•		
•	NHP 201510P0001	SIDE WALL-RIGHT SAFERING / SAFEPLUS	L3	•		•	•

3.7.13 Accessory - Covers and Frames

•	2RAA010719P0001	BACK COVER , CABLE COMPARTMENT 36 C-MODU	L2		•		
•	1VDC000031R0007	BAG 7 - FRONT COVER MOUNTING MATERIALS	L2	•	•	•	•
	3WAA007799P0001	DIRAK HINGE 4-150 SL	L2		•		
•	NHP 305012P0001	DISTANCE RING, WINDOW	L3	•		•	•
•	NHSN910003P0001	DOCUMENT HOLDER A4	L2		•		
•	1VDC001080R0001	ENA LABEL, V-MODULE - Kit	L2		•		
•	1VDP002488P0001	LIFTING LUG SAFERING/SAFEPLUS 36	L2		•		
•	2RAA035857A0001	MIMIC DIAGRAM V W/ARC SUPPRESSOR ASM , 3	L2		•		
•	2RAA036092A0001	MIMIC DIAGRAM C W/ARC SUPPRESSOR ASM , 3	L2		•		
•	1VDC000072R0001	PRESSURE RELEASE LID, ARC SUPRESSOR	L3	•	•	•	•
•	1VDC000071R0001	PRESSURE RELEASE LID, STANDARD ASSEMBLY	L3	•	•	•	•
•	NHP 304627P0001	SAFE+-MF MONT.PROF.24KV	L2	•			
	1VDP000602P0001	SPACER EXTERNAL ARRANGEMENT	L2	•		•	•

3.8 Current Transformers

3.8.1 CT

Pictures in BOL	Product ID	Catalog Description	SPC	1 2-24	36	Air	AirPlus
•	NHSN718038P0001	CABLE POWER TRANSFORMER KOLMA 06 A1	L2	•		•	•
	NHSN718038P0004	CABLE POWER TRANSFORMER KOLMA 06 D1	L2	•		•	•
	3WAA031341P0080	CT1 7,2A KOKM 072BA10	L2	•	•	•	•
•	1YMA583791R0001	CT2 14,4/0,075A 16-56A KOKM 072	L2	•	•	•	•
•	1YMA583791R0002	CT3 28,8/0,075A 32-112A KOKM 072	L2	•	•	•	•
•	1YMA583791R0003	CT4 57,6/0,075A 64-224A KOKM 072	L2	•	•	•	•
•	1YMA583791R0004	CT5 115,2/0,075 128-448A KOKM 072	L2	•	•	•	•
•	NHSN718034P0011	CURRENT TRANSFORMER MPRB-06 RELAY CT1	L2	•		•	•
•	NHSN718034P0012	CURRENT TRANSFORMER MPRB-06 RELAY CT2	L2	•		•	•
•	3WAA010914P0001	CURRENT TRANSFORMER SEG WIC CT1 8-32A	L2	•	•	•	•
•	NHSN706046P0101	CURRENT TRANSFORMER TYPE WIC1-W2AS1	L2	•		•	•
•	NHSN706046P0102	CURRENT TRANSFORMER TYPE WIC1-W3AS1	L2	•	•	•	•
•	NHSN706046P0103	CURRENT TRANSFORMER TYPE WIC1-W4AS1	L2	•	•	•	•
•	NHSN706046P0104	CURRENT TRANSFORMER TYPE WIC1-W5AS1	L2	•		•	•
•	3WAA031341P0009	KECA 80C85 CURRENT SENSOR	L2	•	•	•	•
•	3WAA031341P0056	KOLA 06 D2 100/1A 2VA CL.10P10	L2	•	•	•	•
•	3WAA028187P0001	METERING CT : 100/1A, 3-5 VA CL 0,5-1	L2	•	•	•	•
•	3WAA028186P0001	METERING CT : 100/5A, 2,5VA CL 0,2S	L2	•		•	•
•	3WAA028186P0003	METERING CT : 100/5A, 5VA CL 0,5S	L2	•		•	•
•	3WAA028187P0002	METERING CT : 200/1A, 3-5 VA CL 0,5-1	L2	•	•	•	•
•	3WAA028186P0002	METERING CT : 200/5A, 2,5VA CL 0,2S	L2	•		•	•
•	3WAA028186P0004	METERING CT : 200/5A, 7,5VA CL 0,5S	L2	•		•	•
•	3WAA028187P0003	METERING CT : 300/1A, 3-5 VA CL 0,5-1	L2	•	•	•	•
•	3WAA028186P0005	METERING CT : 300/5A, 10 VA CL 0,5S	L2	•		•	•
•	3WAA028187P0004	METERING CT : 400/1A, 3-5 VA CL 0,5-1	L2	•	•	•	•
•	3WAA028186P0006	METERING CT : 400/5A, 10 VA CL 0,5S	L2	•		•	•
•	3WAA028187P0005	METERING CT : 600/1A, 3-5 VA CL 0,5-1	L2	•	•	•	•
•	3WAA028186P0007	METERING CT : 600/5A, 10 VA CL 0,5S	L2	•		•	•
	3WAA038311P0001	METERING CT KOKM 072CA10 400/1A, 3-5VA	L2	•	•	•	•
	3WAA038312P0001	METERING CT KOKM 072CA10 600/1A, 3-5VA	L2	•	•	•	•
•	3WAA028188P0006	PROTECT.CT:50-100-200/1A,1,5-3-6VA 10P10	L2	•	•	•	•
•	3WAA028188P0001	PROTECTION CT : 150/1A, 4VA CL 5P10	L2	•	•	•	•
•	3WAA028188P0002	PROTECTION CT: 100-200/1A,4-7VA CL 5P10	L2	•	•	•	•
•	3WAA028188P0004	PROTECTION CT: 300-600/1A, 4-7VA CL 5P10	L2	•	•	•	•
•	3WAA028188P0005	PROTECTION CT:400-600/1A, 4-7VA CL 5P10	L2	•	•	•	•
	3WAA038318P0001	PROTECTION CT KOKM 072CA10 50-100-200/1A	L2	•	•	•	•
	3WAA038314P0001	PROTECTION CT KOKM 072BA10 100-200/1A, 4	L2	•	•	•	•
	3WAA038313P0001	PROTECTION CT KOKM 072CA10 150/1A, 4VA	L2	•	•	•	•
	3WAA038315P0001	PROTECTION CT KOKM 072CA10 200-400/1A, 4	L2	•	•	•	•
	3WAA038316P0001	PROTECTION CT KOKM 072CA10 300-600/1A	L2	•	•	•	•
	3WAA038317P0001	PROTECTION CT KOKM 072CA10 400-600/1A	L2	•	•	•	•
•	3WAA021417P0001	SPLIT CORE TRAFO TQ120 100-200/1A 5p10	L2		•		

3.8.2 Accessory - Current Transformers

•	2RAA023236A0001	6 X CT MOUNTING PLATE CB WITH FASTENERS	L2	•			
•	1VDV001083	24KV CABLE LIST REJ603 W/KOLMA	L2	•		•	•
	1VDC000083R0001	Isolator Metering 12/24	L2	•		•	•

3.9 Feeder and Battery

3.9.1 Battery

Pictures in BOL	Product ID	Catalog Description	SPC	1 2-24	36	Air	AirPlus
•	3WAA041745P0001	HAZE GEL Battery 12V 26AH	L2	•	•	•	•
	3WAA041746P0001	HAZE GEL Battery 12V 33AH	L2	•		•	•

3.9.2 Charger

•	NHSN707011P0013	BATTERY CHARGER ADC5183	L2	•	•	•	•

3.9.3 Accessory - Feeder and Battery

•	2RAA034300P0001	26Ah BATTERY COVER SAFEO+ 12/24/36	L2	•			

3.10 Fuses

3.10.1 Fuse

Pictures in BOL	Product ID	Catalog Description	SPC	1 2-24	36	Air	AirPlus
•	2CDS272001R0065	AUTOMAT S202M-B 6	L2	•	•	•	•
•	2CDS272001R0165	AUTOMAT S202M-B 16	L2	•	•	•	•
•	2CDS272001R0104	AUTOMAT S202M-C 10	L2	•	•	•	•
•	2CDS272001R0064	AUTOMAT S202M C 6	L2	•	•	•	•
•	1VDC000037R0001	FUSE 5x20MM, 1.0 A (10 PCS.)	L2	•	•	•	•
•	1VDC000037R0002	FUSE 5x20MM, 2.0 A (10 PCS.)	L2	•	•	•	•
•	1VDC000037R0003	FUSE 5x20MM, 4.0 A (10 PCS.)	L2	•	•	•	•
•	1VDC000037R0004	FUSE 5x20MM, 6.3 A (10 PCS.)	L2	•	•	•	•
•	NHSN706046P0010	FUSE LINK TYPE WBP 10-12KV	L2	•		•	•
•	NHSN706046P0020	FUSE LINK TYPE WBP 20-24KV	L2	•		•	•

3.10.2 Accessory - Fuses

•	NHP 304694P0001	CONNECTION METERING MODULE	L2	•		•	•
•	NHP 201487R0001	COVER, ASSEMBLED F-MODULE	L2	•			
•	NHP 407997P0001	FIELD CONTROLLER, FUSE METERING MODULE	L2	•		•	•
	2RAA041266A0001	FUSE ADAPTER 292-442 SET , SAFERING	L2	•	•	•	•
•	1VDP001730R0001	FUSE LID ASSEMBLED SR/SP 36	L2		•		
•	1VDC000037R0005	FUSE MODULAR UK-ST 3118012 (10 PCS.)	L2	•	•	•	•

3.11 Interlocks

3.11.1 Blocking Coil

Pictures in BOL	Product ID	Catalog Description	SPC	1 2-24	36	Air	AirPlus
•	3WAA018400P0024	COIL WUXI 24V DC	L2	•	•	•	•
•	3WAA018400P0048	COIL WUXI 48V DC	L2	•	•	•	•
•	3WAA018399P0110	COIL WUXI 110V AC/DC	L2	•	•	•	•
•	3WAA018399P0220	COIL WUXI 220V AC/DC	L2	•	•	•	•

3.11.2 Bushing Electrical

	1VDC000031R0010	BAG 10 - INTERLOCK CABLE CONNECTION KIT	L3	•	•		
	1VDC001042R0001	INTERLOCK CABLE COMPARTMENT KIT 1, 36	L3		•		
	1VDC001043R0001	INTERLOCK CABLE COMPARTMENT KIT 2 , 36	L3		•		
	1VDC001044R0001	INTERLOCK CABLE COMPARTMENT KIT 3, 12/24	L3	•			

3.11.3 Cable Compartment Interlock

	2RAA038658A0001	24/36 DE-MOD. OPER. INTERLOCK VESTAS	L3	•	•		
•	1VDP002121R0001	CABLE ROOM INTERLOCK , 36KV IN	L3		•		
	1VDP002695R0001	CABLE ROOM INTERLOCK SR/SP 36	L3		•		
•	2RAA018010P0001	OPERATION SHAFT INTERLOCK , E-MECHANISM	L2	•	•	•	•
•	NHP 102016R0001	SAFE0 CABLE COMP. INTERLOCK ASS STD	L3	•		•	•
•	NHP 102112R0001	SAFE0 KABELROMFORRIGL.V-FELT	L3	•		•	•

3.11.4 Mechanism Interlock

	1VDC000041R0001	V 24KV Interlocking 2PA/3PKE Mechanism	L3	•			
	1VDC001041R0001	INTERLOCKING EL3-3PKE	L3	•		•	•

3.11.5 Ronis

•	NHSN910038P0002	1 SET KEY LOCK	L2	•	•	•	•
	1VDC000038R0001	DOUBLE RONIS EARTH SWITCH COMPLETE	L2	•	•	•	•
•	NHP 304976R0001	DOUBLE RONIS MOUNTED E-MECHANISM	L2	•	•	•	•
•	NHSN910038P0001	KEY LOCK	L2	•	•	•	•
	3WAA038663P0001	KEY LOCK WITH SPARE KEY	L2	•	•	•	•
•	2RAA033515A0001	TRAPED KEY INTERLOCK SYSTEM VESTAS	L2	•	•		
•	3WAA031203P0002	VESTAS LOCK SET TYPE 2	L2		•		
•	3WAA031203P0003	VESTAS LOCK SET TYPE 3	L2		•		

3.11.6 Accessory - Interlocks

•	1VDC000031R0005	BAG 5 - RONIS MOUNTING SET	L2	•	•	•	•
•	NHP 304960R0001	INTERLOCK. OPERATING HANDLE, MOTOR LB/EB	L2	•	•	•	•
•	1VDP003101R0001	OPERATING HANDLE INTERLOCK C/F-MODULE	L2	•	•	•	•
•	NHP 304949R0001	OPERATING HANDLE INTERLOCK LBS	L2	•	•	•	•
•	1VDP003095R0001	OPERATING HANDLE INTERLOCK MOTOR OPER	L2	•	•	•	•
•	NHP 304555R0001	SAFE0 PADLOCK BRACKET CPL.	L2	•	•	•	•

3.12 LV Modules

3.12.1 LV Compartment

Pictures in BOL	Product ID	Catalog Description	SPC	1 2-24	36	Air	AirPlus
•	3WAA020049P0100	BASE ELEMENT SURGE PROTECTION VAL-MS BE	L2	•	•	•	•
•	3WAA026524P0002	BASE WITH ADAPTER FOR RX RELAY 1MRK00089	L2	•	•	•	•
•	3WAA026525P0002	BLOCKING LAD6K10	L2	•	•	•	•
•	1SVR730020R0200	CT-MVS.21S TIME RELAY, MULTIFUNCTION	L2	•	•	•	•
•	3WAA020053P0100	DC VOLTAGE MONITORING RELAY PVCB	L2	•	•	•	•
•	1VDC000080R0003	DOOR COMPONENTS REPLACEMENT - Kit	L2	•	•	•	•
•	3WAA026524P0001	FAST ACTING RELAY RX216037 AD, 24V DC	L2	•	•	•	•
•	3WAA011017P0001	MANUAL RELAY MR11 10-2	L2	•	•	•	•
•	KMW11499929C10	RECTIFIER REC36MB160A	L2	•	•	•	•
•	NHSN710013P0011	RELE RT 424024 24 VDC	L2	•	•	•	•
•	NHSN710013P0013	RELE RT 424048 48 VDC	L2	•	•	•	•
•	NHSN710013P0015	RELE RT 424110 110 VDC	L2	•	•	•	•
•	3WAA040499P0001	SHUNT TEST UNIT 2.0	L2	•	•	•	•
	1SVR730750R0400	SP.OVERV.RELÉ CM-EFS.2S, 2C/O	L2	•	•	•	•
•	3WAA020049P0200	SURGE ARRESTER VAL-MS 230 ST	L2	•	•	•	•
•	1VDC000080R0001	SWITCH LOW VOLTAGE CABINET ASSEMBLY	L2	•	•	•	•
•	1VDC000036R0002	TERMINAL BLOCK MBKKB 2,5 (50 PCS.)	L2	•	•	•	•
•	1VDC000036R0001	TERMINAL BLOCK URTK/S (10PCS)	L2	•	•	•	•
	NHSN706050P0001	UNDERVOLTAGE RELAY VDRI-U 48 VDC	L2	•			
•	1VDC000080R0006	WIELAND PLUG, 420-02-X1	L2	•	•	•	•
•	1VDC000080R0005	WIELAND PLUG, 420-02-X2	L2	•	•	•	•
•	1VDC000080R0004	WIELAND PLUG, 420-02-X3	L2	•	•	•	•

3.12.2 Accessory - LV Modules

•	1VDC000080R0002	2-WAY SWITCH WITH LIGHT	L2	•	•	•	•
•	3WAA007699P0001	11 PIN BASE	L2	•	•	•	•
•	3WAA007697P0024	11 PIN RELAY 24V DC	L2	•	•	•	•
•	3WAA011018P0001	11 PIN RELAY 48V DC	L2	•	•	•	•
•	3WAA007697P0230	11 PIN RELAY 230V AC	L2	•	•	•	•
•	3WAA020051P0100	DIN RAIL POWER SUPPLY MDR-100-48	L2	•	•	•	•
•	NHSN710013P0050	FREE-WEELING DIODE PTMT00A0 DC	L2	•	•	•	•
•	2RAA025089A9015	PENDANT CONTROL, 6 HOLES WITH CABLE	L2		•		
•	2RAA025089A0546	PANDANT FOR MK3E ETERNETH CV	L2			•	
•	2RAA025089A0547	PANDANT FOR MK3E ETERNETH CCV	L2		•		
•	2RAA025089A0548	PANDANT FOR MK3E ETERNETH CCCV	L2		•		

3.13 Measure/Indicator Device

3.13.1 Current Meter

Pictures in BOL	Product ID	Catalog Description	SPC	1 2-24	36	Air	AirPlus
	NZN 000680R0011	Amp.M.-Selector CG8-A038-FT2	L2	•	•		
•	3WAA010137P0101	AMPEREMETER IQ72 100/1A	L2	•	•	•	•
•	3WAA010137P0105	AMPEREMETER IQ72 100/5A	L2	•	•	•	•
•	3WAA010137P0201	AMPEREMETER IQ72 200/1A	L2	•	•	•	•
•	3WAA010137P0301	AMPEREMETER IQ72 300/1A	L2	•	•	•	•
•	3WAA010137P0405	AMPEREMETER IQ72 400/5A	L2	•	•		
•	3WAA010137P0605	AMPEREMETER IQ72 600/5A	L2	•	•		

3.13.2 Directional Short Circuit Indicator and Directional Earth Fault Indicator

•	3WAA021120P1000	COMPASS B & CABLE PACK COMPASS B	L2	•	•	•	•
•	3WAA038504P0001	COMPASS B 2.0	L2	•	•	•	•
•	3WAA039777P0001	IKI-50_1F	L2	•	•	•	•
•	3WAA039778P0001	IKI-50_2F	L2	•	•	•	•
•	3WAA039142P0001	SIGMA D	L2	•	•	•	•
	3WAA039143P0001	SIGMA D+	L3	•	•	•	•
•	3WAA039144P0001	SIGMA D++	L2	•	•	•	•

3.13.3 Earth Fault Indicator

•	3WAA014980P0001	EARTH FAULT INDICATOR TYPE EFI.07	L2	•	•	•	•

3.13.4 IKI

•	1VDC000110R0001	IKI-22 SHORT CIRCUIT INDICATOR - Kit	L2	•	•	•	•

3.13.5 Short Circuit Indicator

•	3WAA039275P0001	SIGMA 2.0	L2	•	•	•	•
•	3WAA039276P0001	SIGMA AC/DC 2.0	L2	•	•	•	•
•	NHSN708005P0028	SHORT CIRCUIT INDICATOR ALPHA E	L2	•	•	•	•
•	NHSN708005P0102	SHORT CIRCUIT INDICATOR ALPHA M 400-1000	L2	•	•	•	•

3.13.6 Short Circuit Indicator Accessory

•	NHSN930000P0101	C/D/DE/V CABLE KIT HORSTMANN INDICATOR	L2	•	•	•	•
•	NHSN708012P0034	KORTSL.IND.600A TYPE FLUID	L2	•			
	3WAA010163P0500	SUMMATION CURRENT TRANSFORMER SIGMA F+E	L2	•	•	•	•

3.13.7 Short Circuit Indicator and Earth Fault Indicator

Pictures in BOL	Product ID	Catalog Description	SPC	1 2-24	36	Air	AirPlus
•	3WAA039763P0001	IKI-20-B1	L2	•	•	•	•
•	3WAA039765P0001	IKI-20-B2	L2	•	•	•	•
•	3WAA029450P0001	KRIES IKI-20C PULS	L2	•			
•	3WAA039277P0001	SIGMA F+E 2.0	L2	•	•	•	•
•	3WAA039278P0001	SIGMA F+E AC/DC 2.0	L2	•	•	•	•
	3WAA039279P0001	SIGMA F+E3 2.0	L2	•	•	•	•
•	3WAA039280P0001	SIGMA F+E3 (AC/DC) 2.0	L2	•	•	•	•
•	3WAA010163P0700	EARTH CONDUTOR CT	L2	•	•	•	•
	3WAA039766P0001	KRIES IKI-LUG_20_2m	L2	•	•	•	•
	3WAA037637P0001	KRIES IKI GSU	L2	•	•	•	•

3.13.8 Voltage Indicator

•	2RAA005615A0001	36KV VOLTAGE DETECTION HR	L3		•		
•	NHSN708015P0001	CAPACTIVE VOLT. INDICATIOR VIM1 FOR HR	L2	•	•	•	
•	NHSN708015P0003	CAPACTIVE VOLT. INDICATIOR VIM3 FOR HR	L2	•	•	•	
•	3WAA029451P0001	CAPDIS-S1+ CAP. VOLTAGE DETECTING SYSTEM	L2	•	•	•	•
•	3WAA021500P0001	CAPDIS-S2+ CAP. VOLTAGE MONITORING SYST	L2	•	•	•	•

3.13.9 Voltage Indicator Accessory

	1VDC000031R0011	BAG 11 - VPIS_VDS	L3	•	•	•	•
•	NHP 304468P0001	BRACKET HR-MODULE C/F-MODULE	L2	•		•	•
	NHP 304470P0001	BRAKETT VPIS DXN	L2	•		•	•
•	3WAA017974P0001	CAPDIS COAX CON. LINE W/LONGEST 1130MM	L2	•	•	•	•
•	3WAA021500P0300	CAPDIS-S2+ (R4) CONTROL LINE 24 kV	L2	•		•	•
•	3WAA021500P0200	CAPDIS-S2+ (R4) CONTROL LINE 36 kV	L2		•		
•	2RBA001459P0001	DXNT2-T-40 BRACKET, C- MODULE	L2		•		
•	NHSN714021P0002	PHASE COMPARATOR, TYPE PCM FOR HR	L2	•	•	•	
•	NHSN714021P0005	PHASE COMPARATOR, TYPE PCM FOR VPIS	L2	•	•	•	•
	3WAA027707P0001	36KV WIRES FOR CAPDIS	L2		•		

3.13.10 Voltage Indicator

•	NHP 201701R0007	HR, C/F-Module, 6-12kV CombiSensor KEVCY	L3	•		•	•
•	NHP 201701R0005	HR, V-Module, 6-12kV, CombiSensor KEVCY	L3	•		•	
•	NHP 201701R0006	HR, V-Module, 12-24kV, CombiSensor KEVCY	L3	•			
•	2RAA023193A0001	VOLTAGE DETECTION, HR36 , SAFERING/SAFEP	L2		•		
•	NHP 201701R0003	VOLTAGE INDICATOR, HR, 6-12KV C/F-MODULE	L3	•		•	
•	NHP 201701R0001	VOLTAGE INDICATOR, HR, 6-12KV V-MODULE	L3	•		•	
•	NHP 201701R0010	VOLTAGE INDICATOR, HR, 10-24KV C/F-MODUL	L3	•			
•	NHP 201701R0009	VOLTAGE INDICATOR, HR, 10-24KV V-MODULE	L3	•			

3.13.11 Voltage Present Indicator System (VPIS)

Pictures in BOL	Product ID	Catalog Description	SPC	1 2-24	36	Air	AirPlus
	1VDC000034R0001	3-6kV VPIS KIT FOR C/F/De/D	L3	•			
	1VDC000034R0002	3-6kV VPIS KIT FOR V-MODULE	L3	•			
	1VDC000034R0003	6-12kV VPIS KIT FOR C/F/De/D	L3	•			
	1VDC000034R0004	6-12kV VPIS KIT FOR V-MODULE	L3	•			
	1VDC000034R0005	10-24kV VPIS KIT FOR C/F/De/D	L3	•			
	1VDC000034R0006	10-24kV VPIS KIT FOR V-MODULE	L3	•			
	1VDC001004R0001	30-40,5kV HR-MODULE KIT FOR 36kV	L3		•		
	3WAA037188P0001	VPIS DXN5-T 3-6KV	L2	•		•	
•	3WAA037198P0001	VPIS DXN5-T 6-12KV	L2	•		•	
•	3WAA037210P0001	VPIS DXN5-T 10-24KV	L2	•	•	•	•
•	3WAA037222P0001	VPIS DXN5-T 24-40,5KV	L2	•	•		
•	3WAA037223P0001	VPIS DXN5-T AIRPLUS 13,8-24KV	L2				•
•	3WAA037224P0001	VPIS DXN5-T IEEE 34.5-40.5KV	L2		•		
•	NHSN708010P0010	VPIS INDICATION UNIT ONLY	L2	•	•	•	•

3.13.12 Voltage Present Indicator System (VPIS) Accessory

•	2RAA013472P0001	BRACKET VPIS DXN5-T SIDETILKOBLING	L2	•	•		
	NHSN930000P1000	CABLE KIT VPIS KSV-1000 C-MODULE	L2		•		
	3WAA037228P0001	CABLE SET B -VPIS DXN5-T	L2	•		•	•
	3WAA037230P0001	CABLE SET C VPIS DXN5-T F-MOD 36/SIDE 24	L2	•	•		
	3WAA037231P0001	CABLE SET D -VPIS DXN5-T	L2		•		
	3WAA037233P0001	CABLE SET E -VPIS DXN5-T	L2	•		•	•
	3WAA037227P0001	36KV CABLE SET VPIS DXN5-T C-V-D-DE	L2	•	•		

3.13.13 Voltage Detecting Sytem (VDS)

•	3WAA015141P1200	Horstmann VDS,WEGA 1.2C 5-12kV	L2	•		•	
•	3WAA015141P1300	Horstmann VDS,WEGA 1.2C 10-24kV	L2	•		•	
•	3WAA015141P0124	Horstmann VDS,WEGA 1.2 10-24kV - AIRPLUS	L2				•
•	3WAA015141P1500	Horstmann VDS,WEGA 1.2C 20-40,5kV	L2		•		
•	3WAA015141P1600	Horstmann VDS,WEGA 2.2C 10-24kV	L2	•		•	
•	3WAA015141P1100	WEGA 1.2C 3-6kV	L2	•		•	
•	3WAA015141P1400	WEGA 1.2C 8-15kV	L2	•		•	

3.13.14 Voltage Detecting Sytem (VDS) Accessory

	3WAA031569P0001	WEGA CABLE PACK - KSW-1010 C/V 36	L2	•	•	•	•

3.13.15 Accessory - Measure/Indicator Device

Pictures in BOL	Product ID	Catalog Description	SPC	1 2-24	36	Air	AirPlus
•	1VDP000720P0001	24KV BRACKET FLAG INDICATOR TYPE WI1-SZ4	L2	•		•	•
•	1VDP002070P0001	36KV VOLTAGE INDICATOR BRACKET C-MODULE	L2		•		
•	2RAA014618P0001	ALPHA & WEGA BRACKET , 36KV C-MODULE	L2		•		
•	NHSN706046P0111	FLAG INDICATOR FOR WIC, TYPE WI1-SZ4	L2	•	•	•	•
•	3WAA011143P0001	FLAG INDICATOR FOR WIC, TYPE WI-SZ5	L2	•	•	•	•
•	3WAA023288P0001	HYGROSTAT ETF 012	L2	•	•	•	•
•	2RAA002597A0001	INDICATION SYSTEM STD. , SAFERI	L2	•		•	•
•	NHP 407853P0001	INDICATOR, CHARGED SPRING	L2	•	•	•	•
•	NHSN706046P0112	PC ADAPTER TYPE WIC1-PC3	L2	•	•	•	•
•	3WAA023290P0001	SMALL 20W HEATER	L2	•	•	•	•

3.14 Motor

3.14.1 2PA Motor Operation for V-modules - kit

Pictures in BOL	Product ID	Catalog Description	SPC	1 2-24	36	Air	AirPlus
	1VDC001502R0001	V MOTOR OPERATION 2PA, 24 VDC, AIR	L2			•	•
•	1VDC000005R0001	V/Sv 2PA Motor Oper. Kit, 24V DC	L2	•		•	•
	1VDC000005R0002	V/Sv 2PA Motor Oper. Kit, 48V DC	L2	•		•	•
	1VDC000005R0003	V/Sv 2PA Motor Oper. Kit, 60V DC	L2	•		•	•
	1VDC000005R0004	V/Sv 2PA Motor Oper. Kit, 110V AC/DC	L2	•		•	•
	1VDC000005R0005	V/Sv 2PA Motor Oper. Kit, 230V AC/DC	L2	•		•	•

3.14.2 3PAE Motor Operation for F-modules - kit

•	1VDC000003R0001	F 3PAE Motor Oper. Kit, 24V DC	L2	•			
	1VDC000003R0002	F 3PAE Motor Oper. Kit, 48V DC	L2	•			
	1VDC000003R0003	F 3PAE Motor Oper. Kit, 60V DC	L2	•			
	1VDC000003R0004	F 3PAE Motor Oper. Kit, 110V AC/DC	L2	•			
	1VDC000003R0005	F 3PAE Motor Oper. Kit, 230V AC/DC	L2	•			
	1VDC001003R0001	F 3PAE Motor Oper. Kit 36, 24V DC	L2		•		
	1VDC001003R0002	F 3PAE Motor Oper. Kit 36, 48V DC	L2		•		
	1VDC001003R0003	F 3PAE Motor Oper. Kit 36, 60V DC	L2		•		
	1VDC001003R0004	F 3PAE Motor Oper. Kit 36, 110V AC/DC	L2		•		
	1VDC001003R0005	F 3PAE Motor Oper. Kit 36, 230V AC/DC	L2		•		

3.14.3 3PKE Motor Operation for C- and SI-modules - kit

•	1VDC001001R0001	C 3PKE Motor Oper. Kit 36, 24V DC	L2		•		
•	1VDC001001R0002	C 3PKE Motor Oper. Kit 36, 48V DC	L2		•		
•	1VDC001001R0003	C 3PKE Motor Oper. Kit 36, 60V DC	L2		•		
•	1VDC001001R0004	C 3PKE Motor Oper. Kit 36, 110V AC/DC	L2		•		
•	1VDC001001R0005	C 3PKE Motor Oper. Kit 36, 230V AC/DC	L2		•		
•	1VDC000001R0001	C/SI 3PKE Motor Oper. Kit, 24V DC	L2	•			
•	1VDC000001R0002	C/SI 3PKE Motor Oper. Kit, 48V DC	L2	•			
•	1VDC000001R0003	C/SI 3PKE Motor Oper. Kit, 60V DC	L2	•			
•	1VDC000001R0004	C/SI 3PKE Motor Oper. Kit, 110V AC/DC	L2	•			
•	1VDC000001R0005	C/SI 3PKE Motor Oper. Kit, 230V AC/DC	L2	•			
	1VDC001501R0001	C MOTOR OPERATION 3PKE, 24 VDC, AIR	L2			•	•

3.14.4 3PKSE Motor Operation for C- and SI-modules - kit

•	1VDC000070R0001	C/SI 3PKSE Motor Oper. Kit, 24V DC	L2	•			
•	1VDC000070R0002	C/SI 3PKSE Motor Oper. Kit, 48V DC	L2	•			
•	1VDC000070R0003	C/SI 3PKSE Motor Oper. Kit, 60V DC	L2	•			
•	1VDC000070R0004	C/SI 3PKSE Motor Oper. Kit, 110V AC/DC	L2	•			
•	1VDC000070R0005	C/SI 3PKSE Motor Oper. Kit, 230V AC/DC	L2	•			

3.14.5 Motor and Gear

Pictures in BOL	Product ID	Catalog Description	SPC	1 2-24	36	Air	AirPlus
•	49527	36KV VCB MOTOR -MS 24-30V DC	L2	•	•		•
•	49536	36KV VCB MOTOR -MS 48-60V DC	L2	•	•		
•	49537	36KV VCBMOTOR-MS 110-130V DC/AC	L2	•	•		
•	49552	36KV VCB MOTOR -MS 220-250V DC	L2	•	•		
•	2RBA016214A0001	MOTOR MECHANISM 24V DC	L2	•	•	•	•
•	2RBA016214A0002	MOTOR MECHANISM 48V DC	L2	•	•	•	•
•	2RBA016214A0003	MOTOR MECHANISM 60V DC	L2	•	•	•	•
•	2RBA016214A0004	MOTOR MECHANISM 110V DC	L2	•	•	•	•
•	2RBA016214A0005	MOTOR MECHANISM 220V DC	L2	•	•	•	•

3.15 Opening Coil

3.15.1 Opening Coil Y1

Pictures in BOL	Product ID	Catalog Description	SPC	1 2-24	36	Air	AirPlus
•	1VDC000009R0001	C/F/V OPENING COIL Y1, 24V DC	L2	•	•	•	•
•	1VDC000009R0002	C/F/V OPENING COIL Y1, 48V DC	L2	•	•	•	•
•	1VDC000009R0003	C/F/V OPENING COIL Y1, 60V DC	L2	•	•	•	•
•	1VDC000009R0006	C/F/V OPENING COIL Y1, 110V AC	L2	•	•	•	•
•	1VDC000009R0004	C/F/V OPENING COIL Y1, 110V DC	L2	•	•	•	•
•	1VDC000009R0007	C/F/V OPENING COIL Y1, 230V AC	L2	•	•	•	•
•	1VDC000009R0005	C/F/V OPENING COIL Y1, 230V DC	L2	•	•	•	•

3.15.2 Opening Coil Y1 for F-modules and C-modules with 3PKSE - Kit

•	1VDC000007R0001	F OPENING COIL Y1, 24V DC	L2	•			
•	1VDC000007R0002	F OPENING COIL Y1, 48V DC	L2	•			
•	1VDC000007R0003	F OPENING COIL Y1, 60V DC	L2	•			
•	1VDC000007R0006	F OPENING COIL Y1, 110V AC	L2	•			
•	1VDC000007R0004	F OPENING COIL Y1, 110V DC	L2	•			
•	1VDC000007R0007	F OPENING COIL Y1, 230V AC	L2	•			
•	1VDC000007R0005	F OPENING COIL Y1, 230V DC	L2	•			

3.15.3 Opening Coil MO for V-modules

•	2RAA037892A0006	OPENING COIL MO 24V DC IEEE-3C	L2	•	•		
•	2RAA037892A0002	OPENING COIL MO 48V AC/DC IEC	L2	•	•		
•	2RAA037892A0004	OPENING COIL MO 110-132V AC/DC IEC	L2	•	•		
•	2RAA037892A0005	OPENING COIL MO 220-250V AC/DC IEC	L2	•	•		

3.15.4 Opening Coil MO and Closing Coil MC for V-modules

•	1VDC001012R0001	V COIL MO/MC, 24V DC	L2	•	•		
•	1VDC001012R0002	V COIL MO/MC, 48V DC	L2	•	•		
•	1VDC001012R0003	V COIL MO/MC, 110V AC/DC	L2	•	•		
•	1VDC001012R0004	V COIL MO/MC, 220-250V AC/DC	L2	•	•		
•	1VDC001013R0001	V COIL MO/MC/MU, 24V DC	L2	•	•		
•	1VDC001013R0002	V COIL MO/MC/MU, 48V DC	L2	•	•		
•	1VDC001013R0003	V COIL MO/MC/MU, 110V AC/DC	L2	•	•		
•	1VDC001013R0004	V COIL MO/MC/MU, 220-250V AC/DC	L2	•	•		

3.15.5 Opening Coil Y1 for V-modules - kit

Pictures in BOL	Product ID	Catalog Description	SPC	1 2-24	36	Air	AirPlus
•	1VDC000008R0001	V OPENING COIL Y1, 24V DC	L2	•		•	•
•	1VDC000008R0002	V OPENING COIL Y1, 48V DC	L2	•		•	•
•	1VDC000008R0003	V OPENING COIL Y1, 60V DC	L2	•		•	•
•	1VDC000008R0006	V OPENING COIL Y1, 110V AC	L2	•		•	•
•	1VDC000008R0004	V OPENING COIL Y1, 110V DC	L2	•		•	•
•	1VDC000008R0007	V OPENING COIL Y1, 230V AC	L2	•		•	•
•	1VDC000008R0005	V OPENING COIL Y1, 230V DC	L2	•		•	•

3.15.6 Opening Coil Y1 and Closing Coil Y2 for F-modules - Kit

•	1VDC000013R0001	V COIL Y1 AND Y2, 24V DC	L2	•		•	•
•	1VDC000013R0002	V COIL Y1 AND Y2, 48V DC	L2	•		•	•
•	1VDC000013R0003	V COIL Y1 AND Y2, 60V DC	L2	•		•	•
•	1VDC000013R0006	V COIL Y1 AND Y2, 110V AC	L2	•		•	•
•	1VDC000013R0004	V COIL Y1 AND Y2, 110V DC	L2	•		•	•
•	1VDC000013R0007	V COIL Y1 AND Y2, 230V AC	L2	•		•	•
•	1VDC000013R0005	V COIL Y1 AND Y2, 230V DC	L2	•		•	•

3.15.7 Relay Trip Coil for V-modules

•	1VDC000016R0001	V RELAY TRIP COIL Y4, 24V DC	L2	•		•	•
•	1VDC000016R0002	V RELAY TRIP COIL Y4, 48V DC	L2	•		•	•
•	1VDC000016R0003	V RELAY TRIP COIL Y4, 60V DC	L2	•		•	•
•	1VDC000016R0006	V RELAY TRIP COIL Y4, 110V AC	L2	•		•	•
•	1VDC000016R0004	V RELAY TRIP COIL Y4, 110V DC	L2	•		•	•
•	1VDC000016R0007	V RELAY TRIP COIL Y4, 230V AC	L2	•		•	•
•	1VDC000016R0005	V RELAY TRIP COIL Y4, 230V DC	L2	•		•	•
•	1VDC000018R0001	V RELAY TRIP COIL Y6	L2	•		•	•
•	2RAA021008A0001	EL 2/3 MECH. OPENING SOLE ID Y9 ASSY	L2	•	•	•	•

3.15.8 Trip Coil MO2 and Blocking Coil RL1

•	1VDC001016R0001	V COIL MO2 AND RL1 EL-MECHANISM, 24V DC	L2	•	•		
•	1VDC001016R0002	V COIL MO2 AND RL1 EL-MECHANISM, 48V DC	L2	•	•		
•	1VDC001016R0003	V COIL MO2 AND RL1, 110-130V AC/DC	L2	•	•		
•	1VDC001016R0004	V COIL MO2 AND RL1, 220-250V AC/DC	L2	•	•		

3.16 Operating Handle and Tools

3.16.1 Operating Handle

Pictures in BOL	Product ID	Catalog Description	SPC	1 2-24	36	Air	AirPlus
•	1VDP000443R0001	OPERATION HANDLE ASS STANDARD	L2	•	•	•	•
•	1VDP000444R0001	OPERATION HANDLE ASSEMBLED DP/SGT	L2	•			
•	1VDP000437R0001	OPERATION HANDLE ASSEMBLED LONG	L2	•	•	•	•
•	2RAA027294A0001	SPAK FOR ENBW LANG	L2	•			

3.17 Operating Mechanism

3.17.1 Bushing Mechanical

Pictures in BOL	Product ID	Catalog Description	SPC	1 2-24	36	Air	AirPlus
	1VDP001462R0001	MECHANICAL BUSHING EARTH 36	L3		•		
	2RAA006385A0001	MECHANICAL BUSHING V-MODULE 36	L3		•		
•	2RAA014304A0001	MECHANICAL BUSHING V-MODULE SEPARABLE 36	L3		•		

3.17.2 Operating Mechanism

•	NHP 101985R0002	2PA MECHANISM	L3	•			
•	2RAA021080A0001	2PA MECHANISM , SAFERING/SAFEPLUS AIR	L3			•	•
•	NHP 102003R0002	2PE-MECHANISM SAFERING / SAFEPLUS	L3	•			
•	2RAA004064A0001	2PE-MECHANISM 36 COMPLETE	L3		•		
•	2RAA015321A0001	2PK-MECHANISM , SAFERING/SAFEPLUS AIR	L3			•	•
•	NHP 101941R0002	3PAE MECHANISM SAFERING/SAFEPLUS	L3	•			
•	1VDP002217R0001	3PAE MECHANISM 36	L3		•		
•	NHP 101935R0002	3PKE MECHANISM SAFERING / SAFEPLUS	L3	•		•	•
•	1VDP001220R0001	3PKE MECHANISM 36	L3		•		
•	NHP 102134R0002	3PKS/E-MECHANISM	L3	•			
•	2RAA039348A0002	EL2 MECHANISM COMPLETE	L3	•			
•	2RAA039348A0001	EL2-S MECHANISM COMPLETE	L3	•			
•	2RAA006375A0002	36kV EL3 MECHANISM COMPL.	L3		•		

3.17.3 Trip Mechanism for F-modules

•	NHP 201589R0001	FUSE TRIPPING SAFERING/SAFEPLUS 12/24	L3	•			

3.17.4 Accessory - Operating Mechanism

•	2RAA023032P0001	AIR BRACKET IP2X OPERATING HANDLE	L2			•	•
•	NHP 101937R0001	SAFE0 MANUAL OPERATION, 3PKE	L2	•		•	•

3.18 Protection Relays

3.18.1 IKI

Pictures in BOL	Product ID	Catalog Description	SPC	1 2-24	36	Air	AirPlus
•	3WAA037635P0001	KRIES IKI 30_E2	L2	•	•	•	•
•	3WAA037643P0001	KRIES IKI 35_P24	L2	•	•	•	•
	3WAA037636P0001	KRIES IKI LUM_30 3M	L2	•	•	•	•

3.18.2 MPRB-06

•	NHP 304483P0001	24KV BRACKET CIRCUTOR MPRB-06	L3	•		•	•
•	1VDV001079	24KV CABLE LIST CIRCUTOR MPRB-06	L3	•		•	•
	2RAA037775A0001	24KV MPRB-06 ASSEMBLY W/BRACKET & WIRES	L2	•		•	•
•	NHSN706030P0106	RELAY CIRCUTOR MPRB-06	L2	•		•	•

3.18.3 REC615

•	3WAA043835P0001	RELAY REC615 (CODE:HBCCACNNDB1BANN21G)	L2	•	•	•	•

3.18.4 REF601

•	3WAA031341P0006	RELAY REF601BA446NB1NH	L2		•		
•	3WAA037903P0001	RELAY REF601BD446ND1NH	L2	•	•	•	•

3.18.4 REJ603

•	1VDV003018	24/36KV CT WIRING T1-T2-T3 REJ603	L2	•	•	•	•
•	3WAA015313P0001	HMI UNIT FOR REJ603	L2	•	•	•	•
•	3WAA008119P0002	RELAY REJ603 V1.5 W/HMI DISPLAY	L2	•	•	•	•
•	3WAA008119P0001	RELAY REJ603 V1.5 WITHOUT HMI DISPLAY	L2	•	•	•	•
•	3WAA036137P0001	RELAY REJ603 V3 (REJ603B1NN1NB44NNJ)	L2	•	•	•	•
	2RAA037758A0001	REJ603 V1.5 W/HMI, BRACKET & WIRES 2PA	L2	•		•	•
	2RAA037759A0001	REJ603 V1.5 WO HMI W/BRACKET&WIRES 2PA	L2	•		•	•
	2RAA037756A0001	REJ603 V1.5 WO HMI W/BRACKET&WIRES EL2	L2	•			

3.18.6 WIB 12

•	3WAA027293P0001	RELAY WIB 12PE	L2	•	•		

3.18.7 WIC1

•	3WAA007806P0003	RELAY WIC1-1PE	L2	•		•	•
•	NHSN706046P0100	RELAY WIC1-2PE	L2	•	•	•	•
•	NHSN706046P0110	RELAY WIC1-3PE	L2	•	•	•	•
•	3WAA007806P0004	RELAY WIC1-4PE	L2	•	•	•	•

3.18.7 WIP 1

•	3WAA007806P0001	RELAY WIP1-1-I1-E1	L2	•		•	•

3.19 Pushbutton

3.19.1 Bracket

Pictures in BOL	Product ID	Catalog Description	SPC	1 2-24	36	Air	AirPlus
•	2RAA008634A0001	BRACKET WITH PUSHBUTTON 0-1 MANUAL OPER	L2	•	•	•	•
•	2RAA008647A0001	BRACKET WITH PUSHBUTTON ON-OFF MANUAL	L2	•	•	•	•
•	2RAA008650A0001	MOTOR BRACKET 0-1 CPL	L2	•	•	•	•
•	2RAA008649A0001	MOTOR BRACKET ON-OFF CPL.	L2	•	•	•	•
•	2RAA030301A0001	PUSH BUTTON INTERLOCK , SR/SP 12/24/36KV	L2		•		

3.19.2 Distance Piece

•	NHP 408070R0001	PADLOCK COVER PUSH BUTTON LEFT	L2	•	•	•	•
•	NHP 408070R0002	PADLOCK COVER PUSH BUTTON RIGHT	L2	•	•	•	•
•	1VDP002960R0001	PADLOCK COVER PUSH BUTTON WITH HOLE LEFT	L2	•	•	•	•

3.19.3 Accessory - Pushbutton

•	2RAA011100A0001	CLOSING FINGER, MANUAL OPERATING , SAFER	L2	•	•	•	•
•	2RAA011099A0001	OPENING FINGER, MANUAL OPERATING , SAFER	L2	•	•	•	•

3.20 SF6 Device and Tools

3.20.1 Manometer

Pictures in BOL	Product ID	Catalog Description	SPC	1 2-24	36	Air	AirPlus
•	1VDC000085R0001	FLEX MANOMETER WITH NO/NC, SF6	L2	•	•		
	1VDC000085R0002	FLEX MANOMETER WITH NO/NC, AIR / AIRPLUS	L2			•	•
•	2RAA032498P0001	MANOMETER TEMP. COMP. FLEXIBLE TUBE	L2			•	•
•	2RAA014075P0001	MANOMETER, TEMP. KOMP. WITH INDICATION	L2	•	•		
•	2RAA032503P0001	MANOMETER WITH INDICATION. FLEXIBLE TUBE	L2			•	•
•	NHP 304769P0001	SAFE0 MANOMETER	L2	•	•		

3.20.2 Pressure Switch

	2RAA020261A0001	DENSITY SWITCH GMD1/LT, 12/24	L3	•		•	•
•	2RAA020260A0001	DENSITY SWITCH GMD1/LT, 36	L3		•		
	3WAA020259P0001	DENSITY SWITCH GMD1/LT W/VALVE	L2	•	•	•	•

3.20.3 Service Tools

•	1VDC000031R0009	BAG 9 - O-RINGS SF6	L3	•	•	•	•
•	1VDC000091R0001	SF6-GAS FILLING T-ADAPTER - Kit	L3	•	•		

3.21 Tulip and Jaw Contacts

3.21.1 Tulip Contact for M-modules

Pictures in BOL	Product ID	Catalog Description	SPC	1 2-24	36	Air	AirPlus
•	NHP 408019P0001	24KV TULIP CONTACT	L2	•			

3.22 Undervoltage Coil

3.22.1 Undervoltage Coil for V-modules

Pictures in BOL	Product ID	Catalog Description	SPC	1 2-24	36	Air	AirPlus
	2RAA037895A0001	UNDERVOLTAGE COIL MU 24V DC	L2	•	•	•	•
	2RAA037895A0003	UNDERVOLTAGE COIL MU 48V AC/DC	L2	•	•	•	•
	2RAA037895A0005	UNDERVOLTAGE COIL MU 110-127V AC/DC	L2	•	•	•	•
	2RAA037895A0006	UNDERVOLTAGE COIL MU 220-250V AC/DC	L2	•	•	•	•

3.22.2 Undervoltage Coil for V-modules - kit

•	2RAA007910A0001	24KV UNDER VOLTAGE COIL 24V ASM.	L2	•		•	•
	2RAA007910A0002	24KV UNDER VOLTAGE COIL 48V ASM.	L2	•		•	•
	2RAA007910A0003	24KV UNDER VOLTAGE COIL 60V ASM.	L2	•		•	•
	2RAA007910A0004	24KV UNDER VOLTAGE COIL 110V ASM.	L2	•		•	•
	2RAA007910A0005	24KV UNDER VOLTAGE COIL 220V ASM.	L2	•		•	•
•	2RAA021833A0001	24KV UNDER VOLTAGE COIL 24V W/TIME DELAY	L2	•		•	•
	2RAA021833A0002	24KV UNDER VOLTAGE COIL 48V W/TIME DELAY	L2	•		•	•
	2RAA021833A0003	24KV UNDER VOLTAGE COIL 60V W/TIME DELAY	L2	•		•	•
	2RAA021833A0004	24KV UNDER VOLTAGE COIL 110V W/TIME DEL.	L2	•		•	•
	2RAA021833A0005	24KV UNDER VOLTAGE COIL 220V W/TIME DEL.	L2	•		•	•

3.23 Voltage Transformers

3.23.1 Cable

Pictures in BOL	Product ID	Catalog Description	SPC	1 2-24	36	Air	AirPlus
•	2RAA032174A0001	2 X CABLES FOR VET-36 / VEG-24 SAFEPLUS	L3		•		
•	2RAA020660A0001	36KVCABLE SET FOR VM LATERAL MOUNTED VTS	L3		•		
•	2RAA019414A0001	CABLE SET , CB METERING MODULE	L3	•		•	•
•	2RAA015427A0001	CABLE SET FOR VMini SAFEPLUS 12/24	L3	•		•	•
•	2RAA020813A0001	CABLE SET LATERAL MOUNTED TRAFO, Vm12/24	L3	•			

3.23.2 VT

•	3WAA020665P0001	TRANSFORMER - TJC 4.C (E43925835)	L3	•		•	•

3.24 Wiring and Plugs

3.24.1 Wiring

Pictures in BOL	Product ID	Catalog Description	SPC	1 2-24	36	Air	AirPlus
•	2RAA014131A0001	36KV EARTHING CABLE 50MM2 L=1200MM	L2		•		
	NZN 000576P1700	IP20 HOUSING, 450W 27OHM	L2	•		•	•
•	2RAA035939A0001	S40 WIRE HARNESS EL2/EL2-S SAFEPLUS 24	L3	•			

3.25 Upgrades

3.25.1 RMU Digital Upgrade

Pictures in BOL	Product ID	Catalog Description	SPC	1 2-24	36	Air	AirPlus
•	2RAA037059A0001	RMU DIGITAL UPGRADE ARC600 FA BOX	L3	•			
•	2RAA037057A0001	RMU DIGITAL UPGRADE REC615 FA BOX	L3	•			
•	2RAA037058A0001	RMU DIGITAL UPGRADE RTU 540CID01 FA BOX	L3	•			

For more information please contact:

Your Service sales contact:
www.abb.com/contacts

More Service information:
http://new.abb.com/medium-voltage/service

© Copyright 2021 ABB. All rights reserved.
Specifications subject to change without notice.

1VDD300006 EN - REV B 12-2021