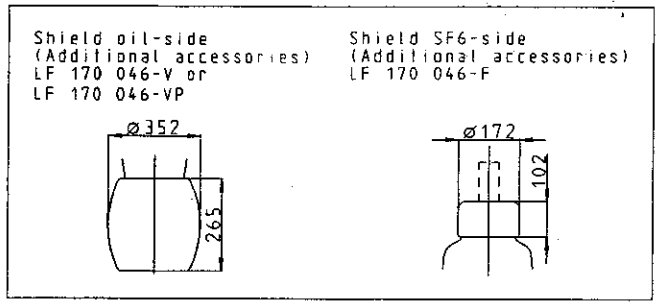

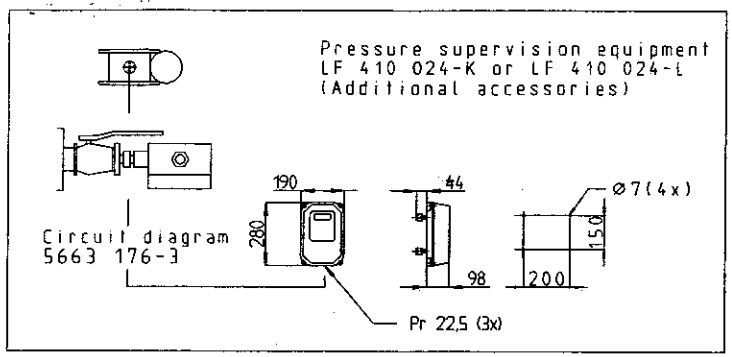

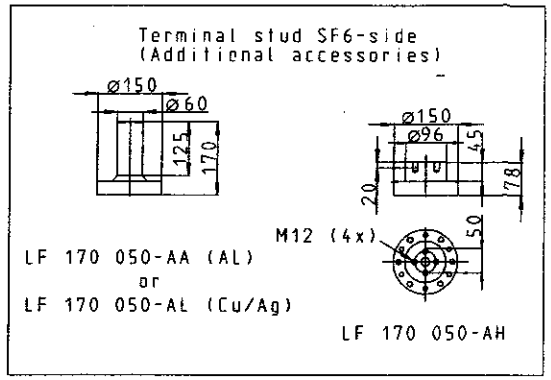

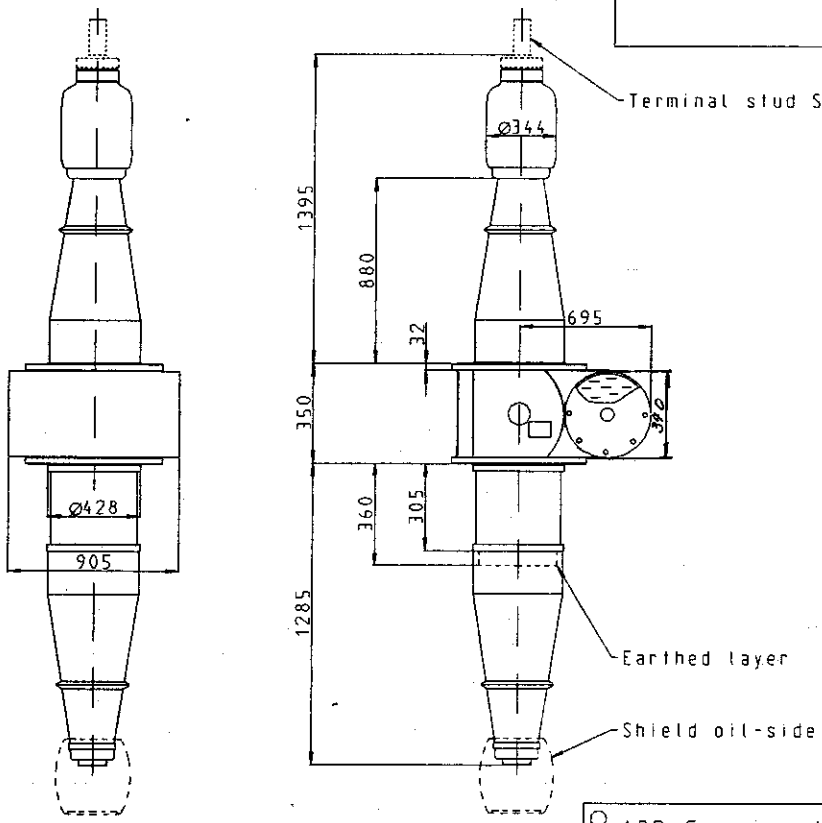

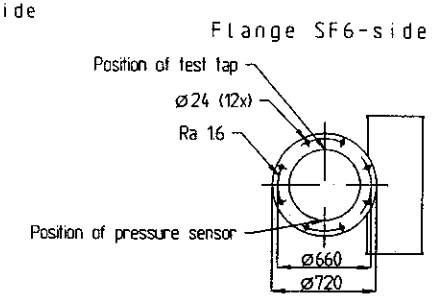

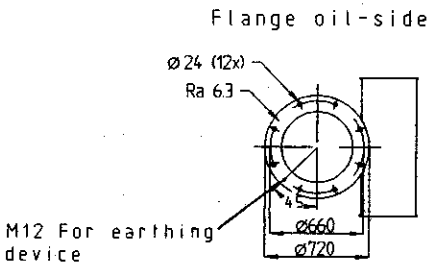

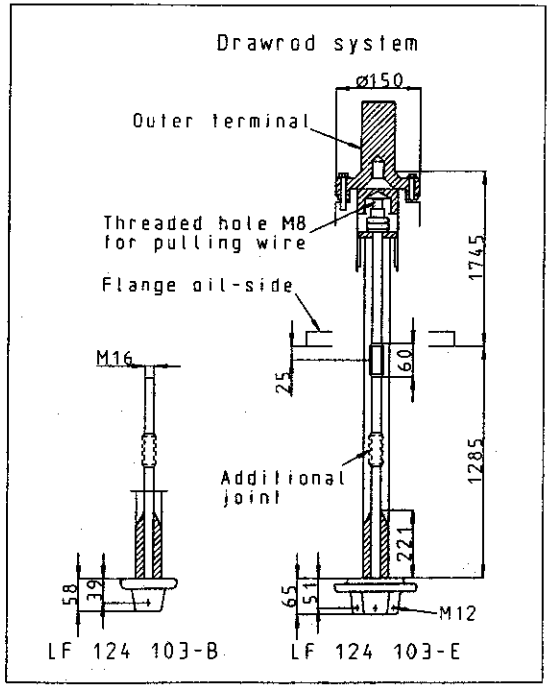

Catalogue number: LF 124 003-B

Electrical data		
Ratings	Rated voltage	550 kV
	Max phase to ground	318 kV
	Rated current Vertical	2500 A
	Rated current Horizontal	1600 A
Test voltages	Lighting impulse	1675 kV
	Switching impulse	1300 kV
Routine test	Power frequency	750 kV

ABB Components AB

Bushing GOEK 1675

No.	Horiz. 1600 A
Un/Uy 550/318 kV	Vert. 2500 A
Test LI/SI/AC 1675/1300/750 kV	
Year	L 1285 mm M 540 kg
PF	%C1/C2 pF

Rev Ind	Revision	Appd	Year	Week
1	340 added	AG	99	94

Accepted by qual	Accepted for prod by	Description (English) GOEK 1675 FE=300	DATAORIGINAL
Design checked by Heyman	Drawn by Andersson	Description (own language)	File name
Drawing checked by Jonsson	Issued by Year Week COM/BK 94 31	2753 015-27	Lang Sheet 1
ABB ABB Components			Rev Cont -

Drawn by Form No. Design checked by Dept Year Sheet Cont

We reserve all rights in this document and in the information contained therein. Reproduction, use or disclosure to third parties without express authority is strictly forbidden © ABB 19