We reserve all rights in this document and in the information contained therein. Reproduction, use or disclosure to third parties without express authority is strictly forbidden. Copr. ABB AB

# Table of contents


| Part of product | Sheet |
|---|---|
| Designations for 3/4x19" casing with 2 TRM slot | 2 |
| Power supply module | 3 |
| Transformer input module | 4 |
| Transformer input module | 5 |
| Binary input module | 6 |
| Binary output module | 7 |

We reserve all rights in this document and in the information contained therein. Reproduction, use or disclosure to third parties without express authority is strictly forbidden. Copr. ABB AB

# Designations for 3/4x19″ casing with 2 TRM slots

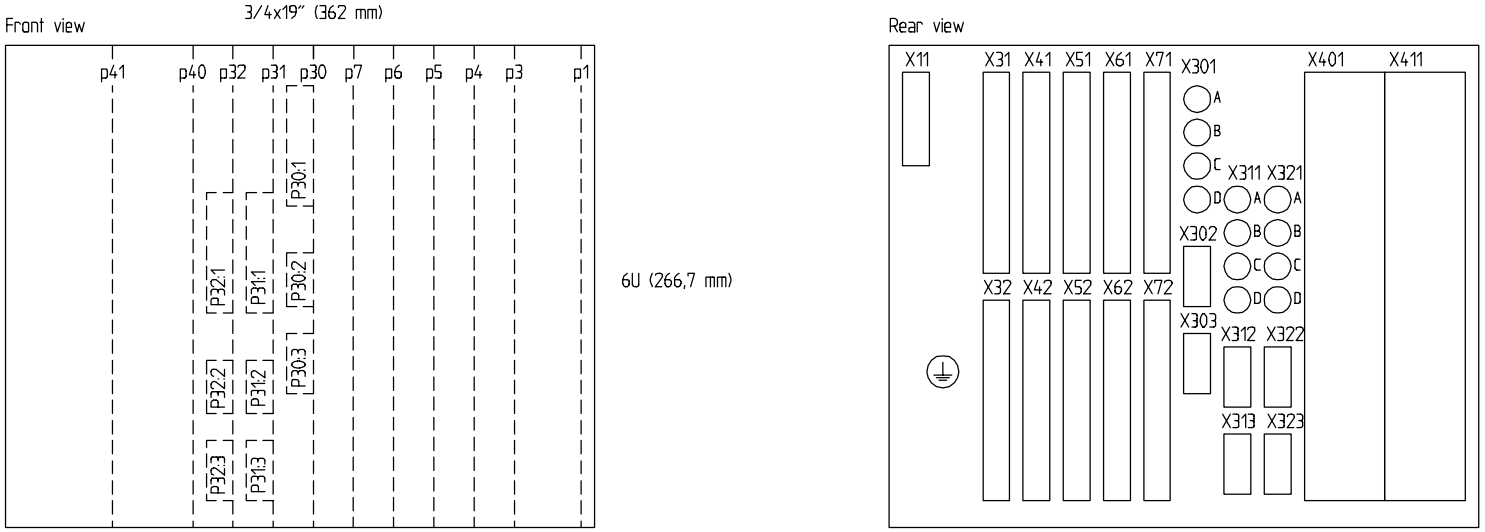


| | | | |
|---|---|---|---|
| Based on | Prepared 2015-11-18 | Jill Eriksson | Title Connection diagram REG670 B30X00 Ver. 2.1 Generator diff. and generator/transformer back-up |
| | Approved 2015-11-24 | Patrik Nyback | |
| | Project | | |

| Rev | Rev. Note | Date | Name |
|---|---|---|---|

ABB AB

| | | | |
|---|---|---|---|
| Doc.des. | Doc.kind | Ref.des. | |
| Resp.dept. | Rev.ind. | Lang. | en |
| Doc.No. 1MRK002803-KB | | Sheet | 2 |
| | | Cont. | 3 |

We reserve all rights in this document and in the information contained therein. Reproduction, use or disclosure to third parties without express authority is strictly forbidden. Copr. ABB AB

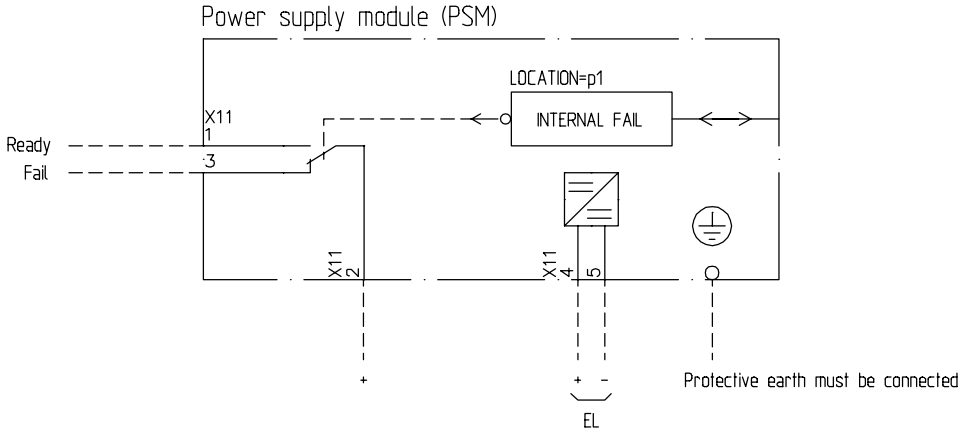


| | | | |
|---|---|---|---|
| Based on | Prepared 2015-11-18 | Jill Eriksson | Title Connection diagram REG670 B30X00 Ver. 2.1 Generator diff. and generator/transformer back-up |
| | Approved 2015-11-24 | Patrik Nyback | |
| | Project | | |

| Rev | Rev. Note | Date | Name |
|---|---|---|---|

ABB AB

| | | | |
|---|---|---|---|
| Doc.des. | Doc.kind | Ref.des. | |
| Resp.dept. | Rev.ind. | Lang. | en |
| Doc.No. 1MRK002803-KB | | Sheet | 3 |
| | | Cont. | 4 |

We reserve all rights in this document and in the information contained therein. Reproduction, use or disclosure to third parties without express authority is strictly forbidden. Copr. ABB AB

## Transformer input module (TRM)

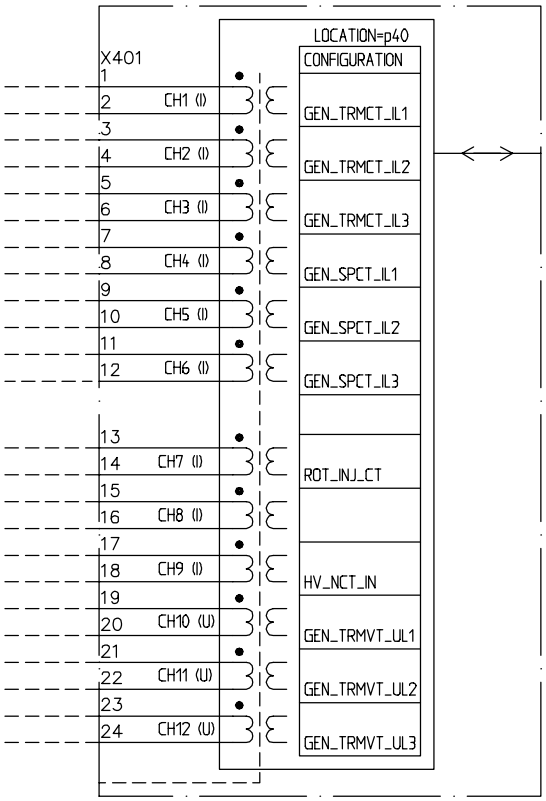


| | | | | | |
|---|---|---|---|---|---|
| Based on | Prepared 2015-11-18 | Jill Eriksson | Title Connection diagram REG670 B30X00 Ver. 2.1 Generator diff. and generator/transformer back-up | Doc.des. / Doc.kind | Ref.des. |
| | Approved 2015-11-24 | Patrik Nyback | | Resp.dept. | Rev.ind. / Lang. en |
| Rev / Rev. Note / Date / Name | Project | | ABB AB | Doc.No. 1MRK002803-KB | Sheet 4 / Cont. 5 |

We reserve all rights in this document and in the information contained therein. Reproduction, use or disclosure to third parties without express authority is strictly forbidden. Copr. ABB AB

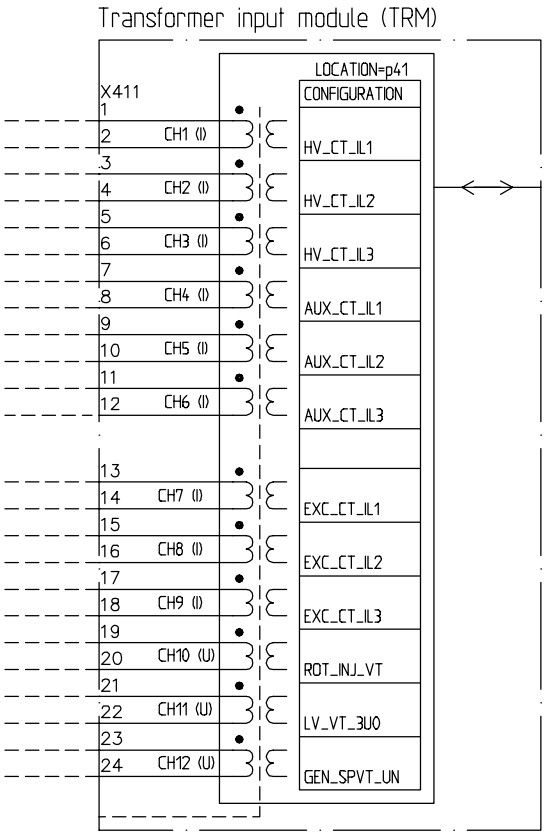


| | | | |
|---|---|---|---|
| Based on | Prepared 2015-11-18 | Jill Eriksson | Title Connection diagram REG670 B30X00 Ver. 2.1 Generator diff. and generator/transformer back-up |
| | Approved 2015-11-24 | Patrik Nyback | |
| | Project | | |

| Rev | Rev. Note | Date | Name |
|---|---|---|---|

ABB AB

| | | | |
|---|---|---|---|
| Doc.des. | Doc.kind | Ref.des. | |
| Resp.dept. | Rev.ind. | Lang. | en |
| Doc.No. 1MRK002803-KB | | Sheet | 5 |
| | | Cont. | 6 |

We reserve all rights in this document and in the information contained therein. Reproduction, use or disclosure to third parties without express authority is strictly forbidden. Copr. ABB AB

## Binary input module (BIM)

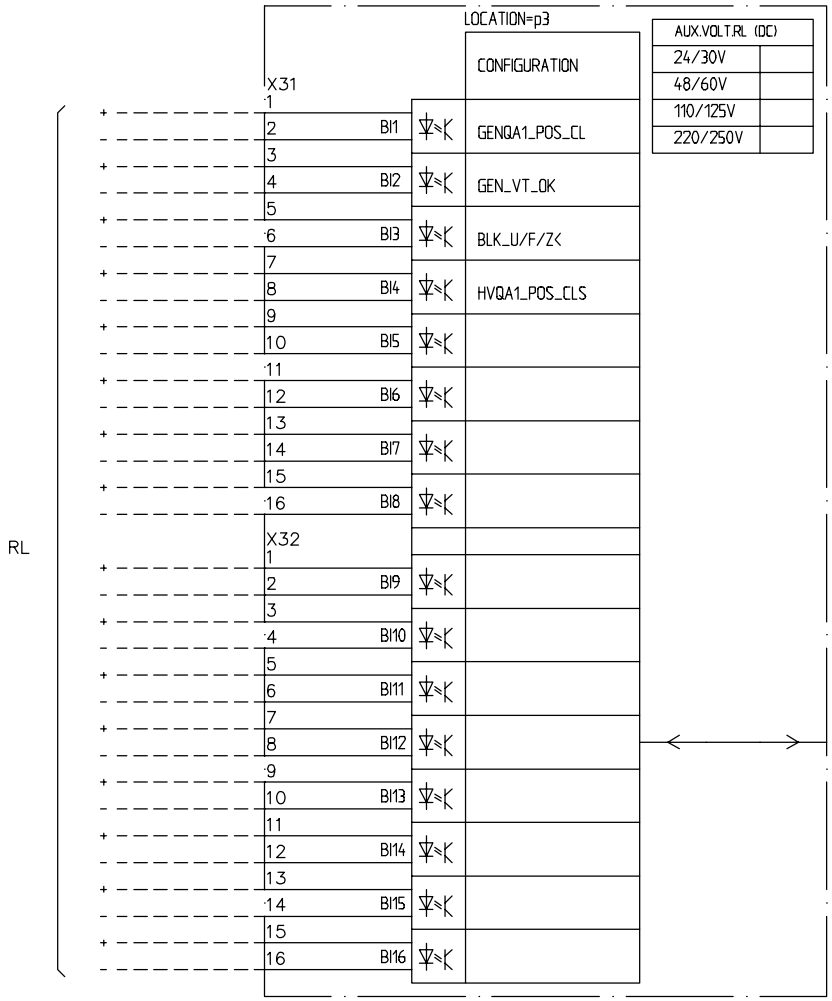


| | | | |
|---|---|---|---|
| Based on | Prepared 2015-11-18 | Jill Eriksson | Title Connection diagram REG670 B30X00 Ver. 2.1 Generator diff. and generator/transformer back-up |
| | Approved 2015-11-24 | Patrik Nyback | |
| | Project | | |

| Rev | Rev. Note | Date | Name |
|---|---|---|---|

ABB AB

| | | | |
|---|---|---|---|
| Doc.des. | Doc.kind | Ref.des. | |
| Resp.dept. | Rev.ind. | Lang. | en |
| Doc.No. 1MRK002803-KB | | Sheet | 6 |
| | | Cont. | 7 |

We reserve all rights in this document and in the information contained therein. Reproduction, use or disclosure to third parties without express authority is strictly forbidden. Copr. ABB AB

## Binary output module (BOM)

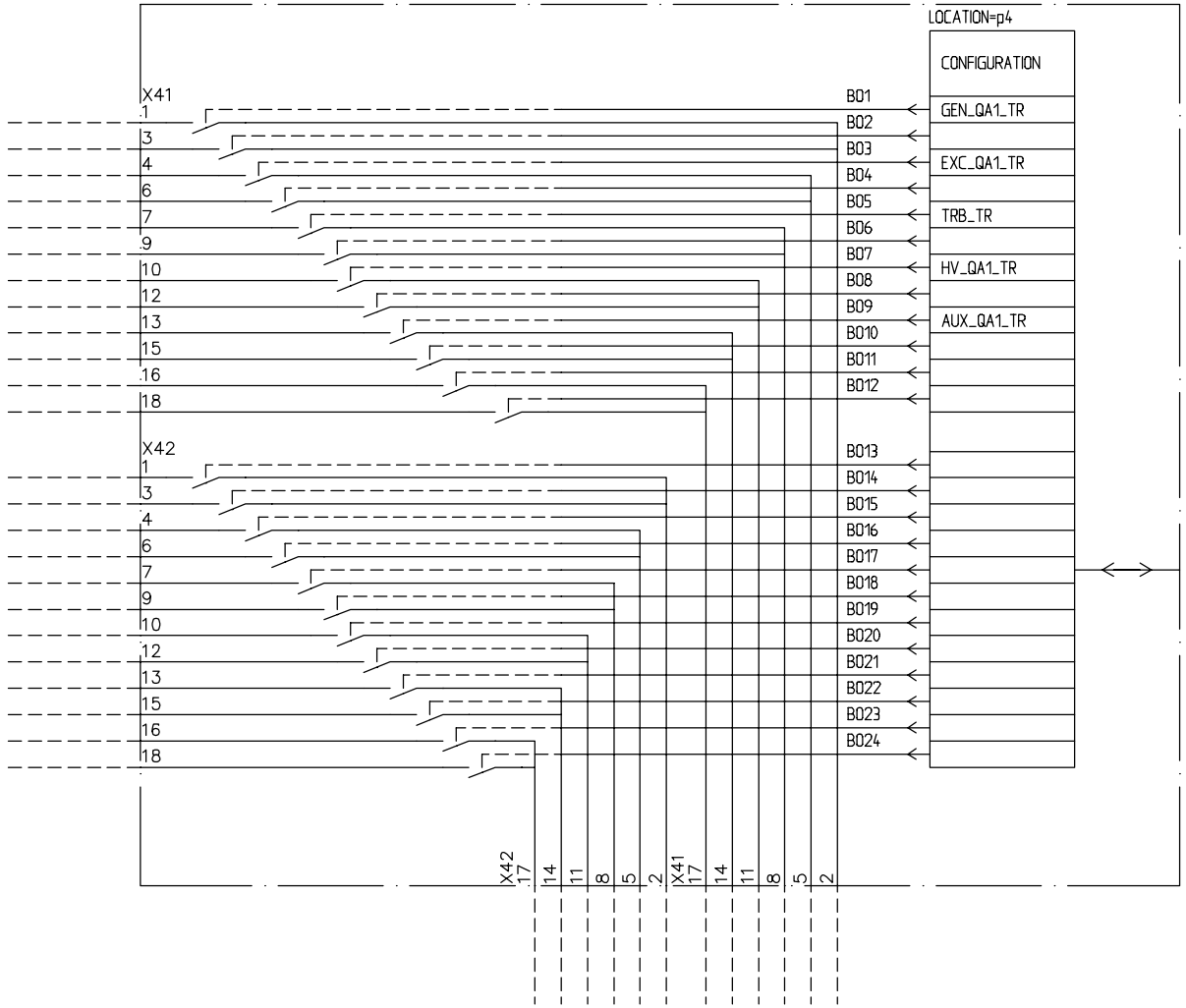


| | | | |
|---|---|---|---|
| Based on | Prepared 2015-11-18 | Jill Eriksson | Title Connection diagram<br>REG670 B30X00 Ver. 2.1 Generator diff. and generator/transformer back-up |
| | Approved 2015-11-24 | Patrik Nyback | |
| | Project | | |

| Rev | Rev. Note | Date | Name |
|---|---|---|---|

ABB AB

| | | | |
|---|---|---|---|
| Doc.des. | Doc.kind | Ref.des. | |
| Resp.dept. | Rev.ind. | Lang. | en |
| Doc.No. 1MRK002803-KB | | Sheet | 7 |
| | | Cont. | – |