Type KDXG Ground Distance Relay

Effective: June 1997
Supersedes I.L. 41-496J, Dated February 1988
(|) Denotes Change Since Previous Issue

CAUTION

Before putting protective relays into service make sure that all moving parts operate freely. Inspect the contacts to see that they are clean and close properly. Operate the relay to check the settings and electrical connections.

1. APPLICATION

The KDXG relay (Figure 2, page 2) is a high speed single phase distance relay of reactance type. Three KDXG relays are used in conjunction with a ground directional unit-timer relay, and an auxiliary current transformer Type IK for transmission line protection from a single phase-to-ground fault within 3 zones of protection.

A ground directional unit-timer relay is required with the KDXG relays. Either KRT or KDTG relay provides this function.

The KDTG should be used to avoid incorrect directional sensing where zero sequence system isolation may occur and zero sequence mutual exists. It is insensitive to line energizing transients and does not require zero sequence current for its operation.

Where relay current for a ground fault within the reach of the relay is less than approximately 3 amperes, or where a third zone reach in excess of approximately 10 ohms is required, the KRT relay is used.

Both the KRT and the KDTG relays contain a directional unit (dual polarized in the case of the KRT and KD-10 phase to phase unit in the KDTG) and a static timer that switches the KDXG reactance unit from zone 1 to zone 2 and 3 after the preset time delays.

The IK current transformer, in addition to its ratioing function for reactance unit current, may also be used to compensate for adjacent line (or lines) zero sequence mutual effect.

A type ITH instantaneous ground over-current relay may be used to supplement the ratio discriminators so that the KRT timers may be started at the inception of a distant fault. Refer to Figure 6 (page 6). The ITH will speed the clearing of faults where the fault current is less than about twice the load current flow. Otherwise, for these cases the timer starting will be sequential after remote breaker has opened to redistribute fault current or cut off load current flow.

2. CONSTRUCTION

2.1. Compensator

The KDXG relay consists of two single air gap transformers, one of which acts as a reactance compensator and the other as a ratio discriminator transformer, one tapped auto-transformer, a cylinder type reactance tripping unit, a polar relay unit, 2 telephone relays for zone switching, diode bridge assembly with a filter network, and a maximum voltage type resistor-diode network.

The compensator is a three winding air-gap transformer, (Figure 3, page 3). There are two primary windings, one designated "T_L" and the other T_O." "T_L" winding is energized by the phase current, and "T_O" by the residual current. Each winding has taps which terminate on the tap plate. Values between taps are marked 0.3, 0.2, 0.6.

Current flowing through the primary coils provides a MMF which produces magnetic flux in the core. A voltage is induced in the secondary which is proportional to the primary tap and current magnitude. This proportionality is established by the cross sectional area of the laminated steel core, the length of an air gap which is located in the center of the coil, and the tightness of the laminations. All of these factors which influence the secondary voltage proportionality have been precisely set at the factory. The clamps which

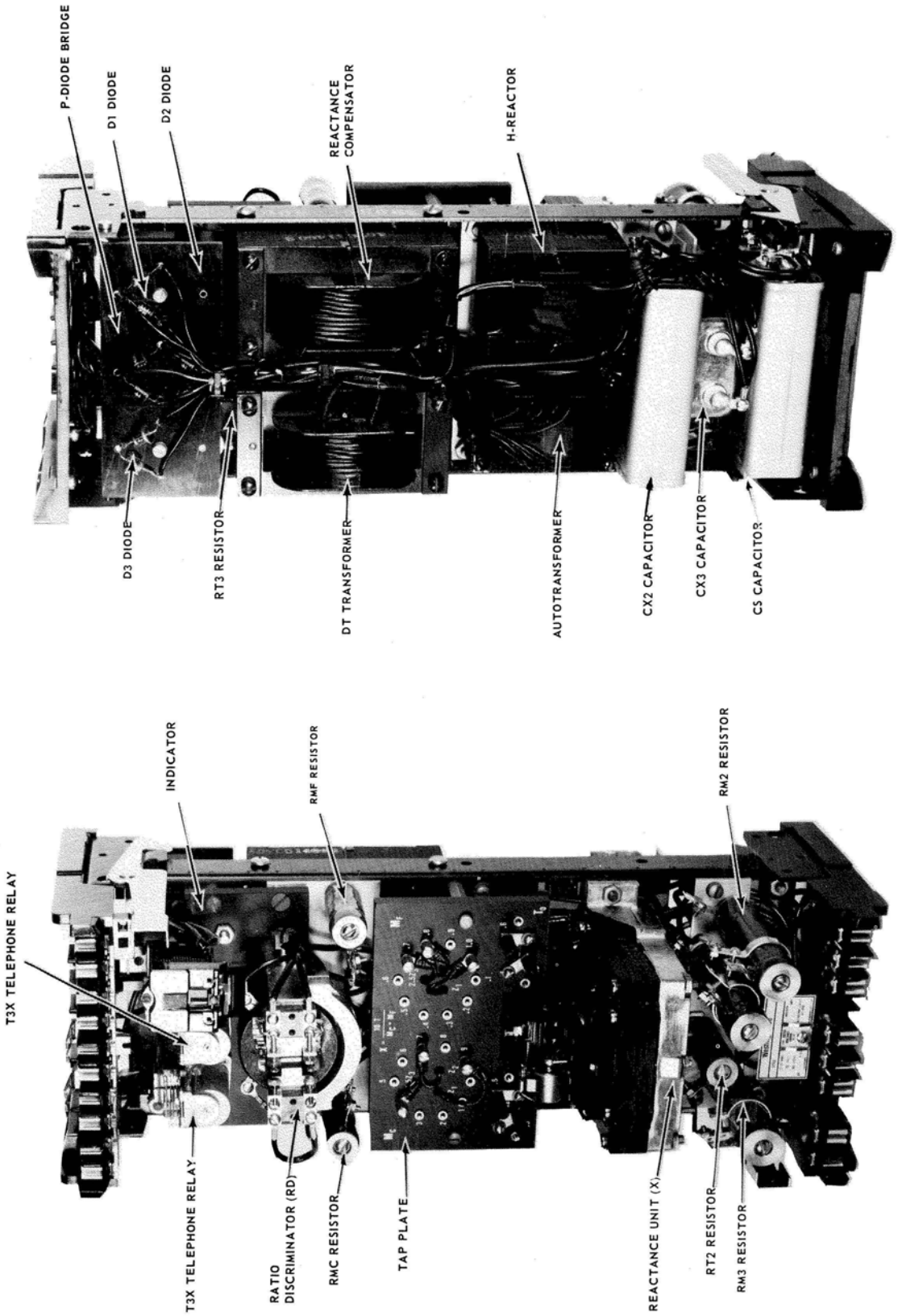

Fig. 1. Type KDXG Relay Without Case

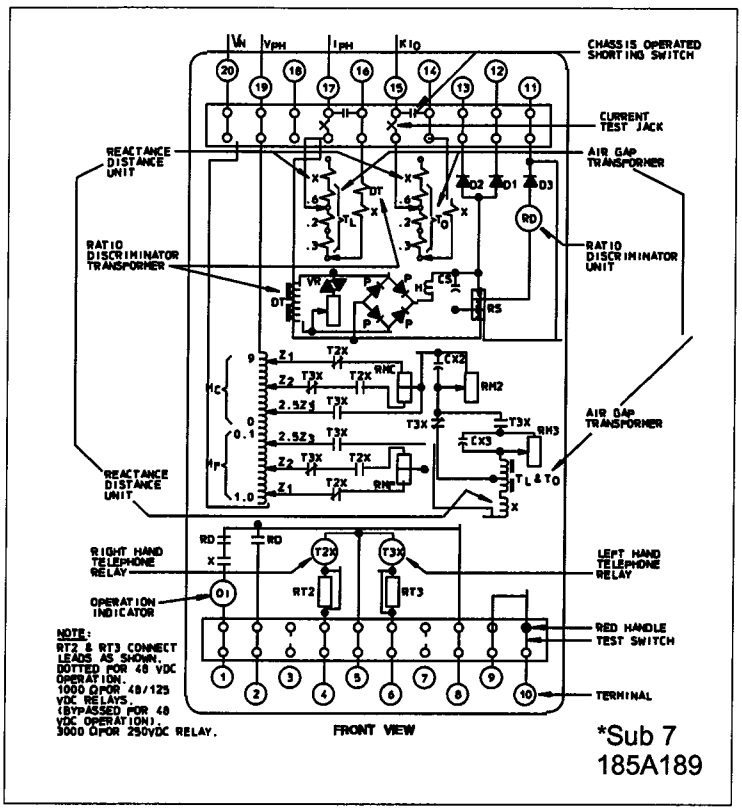

Figure 2. Internal Schematic of the Type KDXG Relay in FT-42 Case

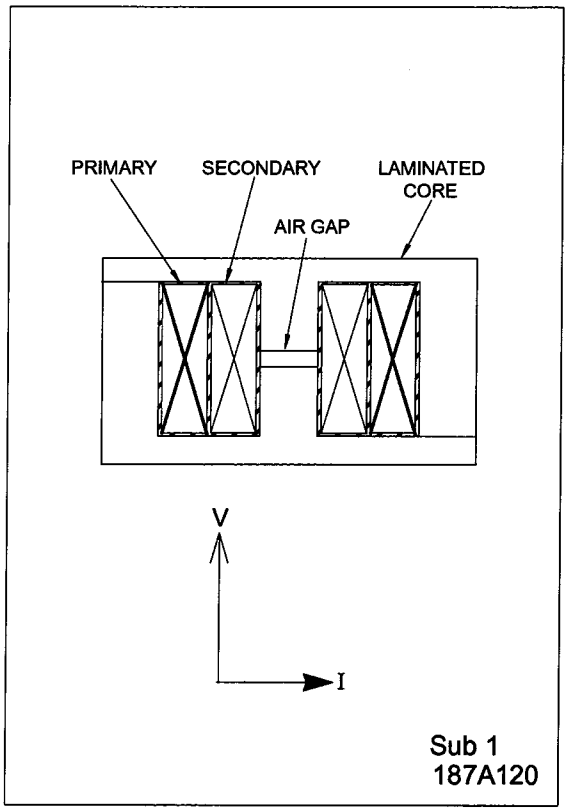

Figure 3. Compensator Construction

hold the laminations should not be disturbed by either tightening or loosening the clamp screws. The secondary winding has a single tap which divides the winding into two sections. One section is always connected subtractively in series with the relay terminal voltage. Thus a voltage which is proportional to the line current and leads the current by 90° (jXI_R) is subtracted from, voltage (V_{LG}) Figure 5a (page 5). The second section becomes connected in series with the first section when the reactance unit is switched to zone 3 setting, thus increasing the secondary voltage output of the compensator by a factor of 2.5.

2.2. Ratio Discriminator Transformer

Ratio discriminator transformer is similar in construction to the compensator except that it has a single primary winding and a single secondary winding that produces a voltage proportional to the magnitude of the phase current.

2.3. Autotransformer

The autotransformer has ten taps M_C which are numbered (0, 1, 2, 3, 4, 5, 6, 7, 8, 9) and ten taps M_F numbered (.1, .2, .3, .4, .5, .6, .7, .8, .9, 1.0) M_C taps represent ten percent autotransformer output taps, and M_F taps are one percent.

2.4. Reactance Tripping Unit

The reactance unit is a four pole induction cylinder type unit. The direction of operating torque of this unit depends on the angle between the current and the relay terminal voltage as modified by the compensator voltage.

Mechanically, the cylinder unit is composed of four basic components:

- A die-cast aluminum frame an electromagnet.
- A moving element assembly and a molded bridge. The frame serves as a mounting structure for the magnetic core.
- The magnetic core which houses the lower pin bearing is secured to the frame by a locking nut.
- The bearing can be replaced, if necessary, without having to remove the magnetic core from the frame.

The electromagnet has two sets of two series connected coils mounted diametrically opposite one another to excite each set of poles. Locating pins on the electromagnets are used to accurately position the lower pin bearing, which is mounted on the frame, with respect to the upper pin bearing that is

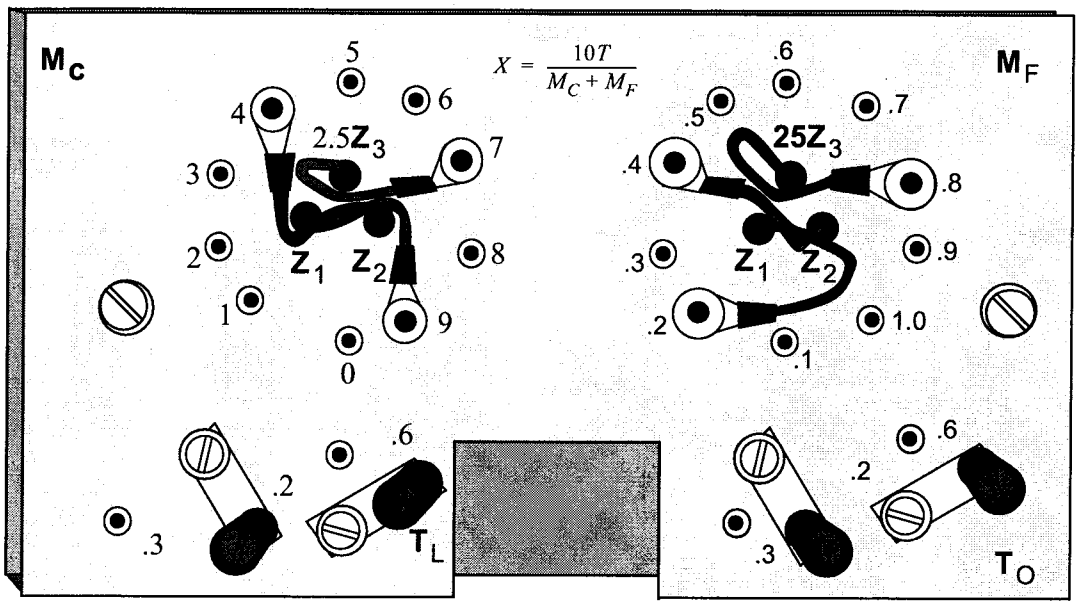

dtp illustration

Figure 4. Tap Plate

threaded into the bridge. The electromagnet is secured to the frame by four mounting screws.

The moving element assembly consists of a spiral spring, contact carrying member, and an aluminum cylinder assembled to a molded hub which holds the shaft. The hub to which the moving contact arm is clamped has a wedge-and-cam construction to provide low-bounce contact action. A casual inspection of the assembly might lead one to think that the contact arm bracket does not clamp on the hub as tightly as it should. However, this adjustment is accurately made at the factory and is locked in place with a lock nut and should not be changed. Optimum contact action is obtained when a force of 4 to 10 grams pressure applied to the face of the moving contact will make the arm slip one-fourth of its total free travel. Free travel is the angle through which the hub will slip from the condition of reset to the point where the clamp projection begins to ride up on the wedge. The free travel can vary between 15° to 20°.

The shaft has removable top and bottom jewel bearings. the shaft rides between the bottom pin bearing and the upper pin bearing with the cylinder rotating in an air gap formed by the electromagnet and the magnetic core. The stops are an integral part of the bridge.

The bridge is secured to the electromagnet and frame by two mounting screws. In addition to holding the upper pin bearing, the bridge is used for mounting the adjustable stationary contact housing. This stationary contact has .002 to .006 inch follow which is set at the factory by means of the adjusting screw. After the adjustment is made the screw is sealed in position with a material which flows around the threads and then solidifies. The stationary contact housing is held in position by a spring type clamp.

When contacts close, the electrical connection is made through the stationary contact housing clamp, to the moving contact, through the spiral spring and out to the spring adjuster clamp.

2.5. Polar Relay Unit (RD)

This unit consists of a rectangular-shaped magnetic frame, an electromagnet, a permanent magnet, and an armature with two contacts. The poles of the crescent-shaped permanent magnet bridge the magnetic frame. The magnetic frame consists of three pieces joined in the rear with two brass rods and silver solder. These non-magnetic joints represent air gaps which are bridged by two adjustable magnetic shunts. The operating winding is concentrically wound around a magnetic core. The armature is fastened to this core at one end and floats in the front air gap at the other end. The moving contact is connected to the free end of a leaf spring.

2.6. Telephone Relays

The telephone relay units T2X and T3X are of fast operate type. In these relays an electromagnet attracts a right angle iron bracket which in turn operates a set of make and make before break contacts. All contacts are of bifurcated type for high reliability.

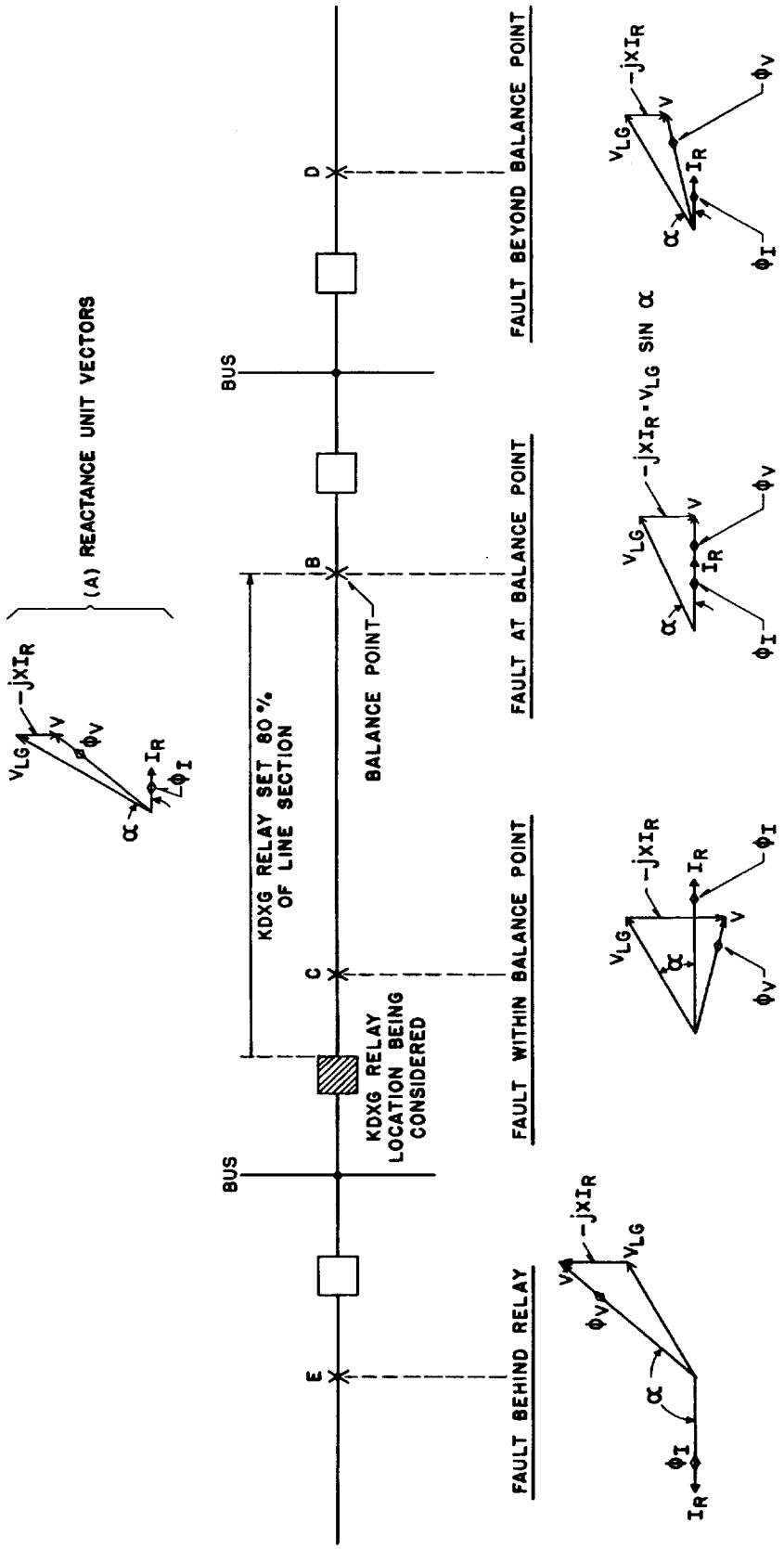

Sub 2
407C687

Figure 5. Voltage, Current and Flux Conditions for the Reactance Unit for Faults at Various Locations

Sub 14
407C602

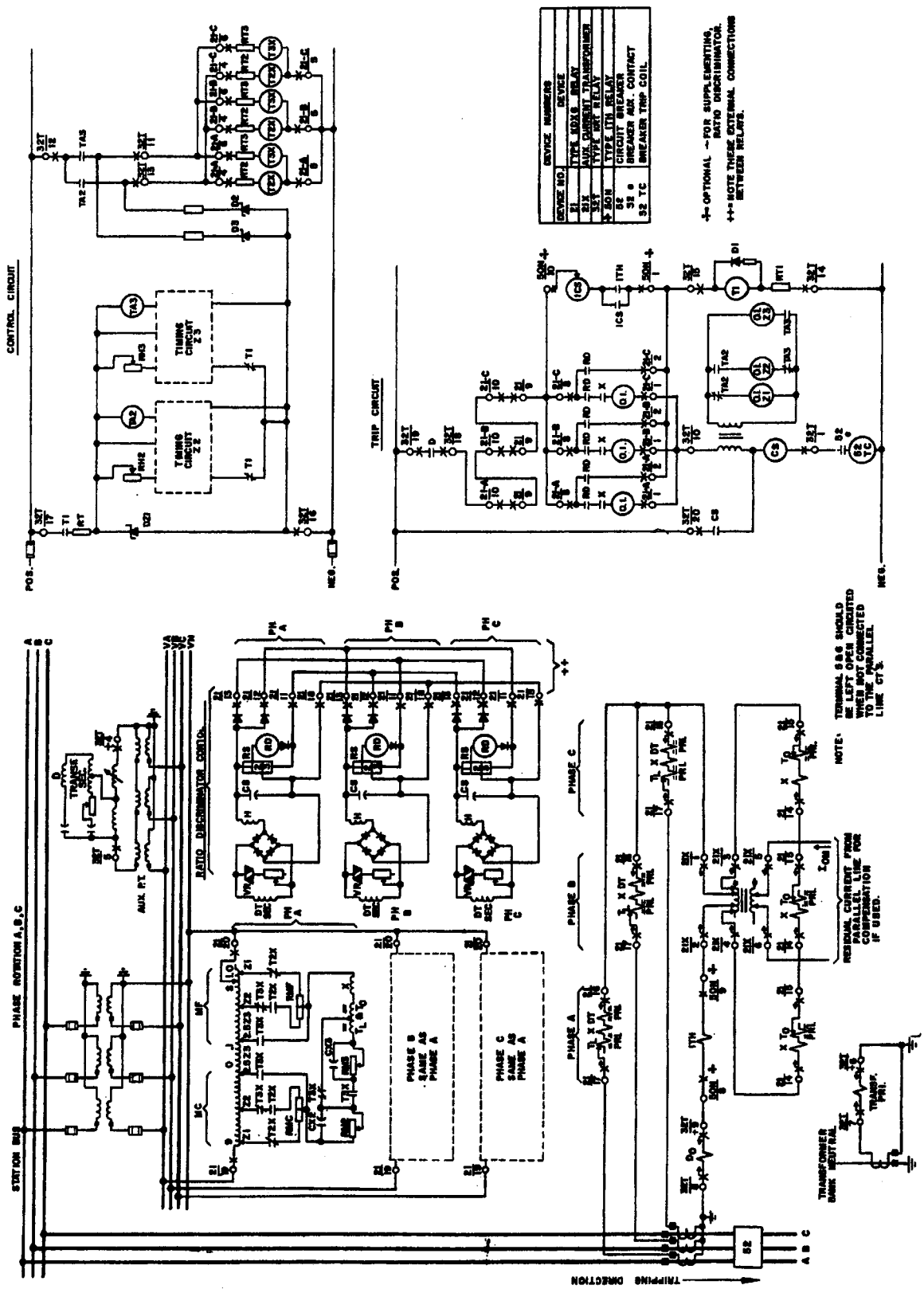

Figure 6. External Schematic for Type KDXG Relay with KRT

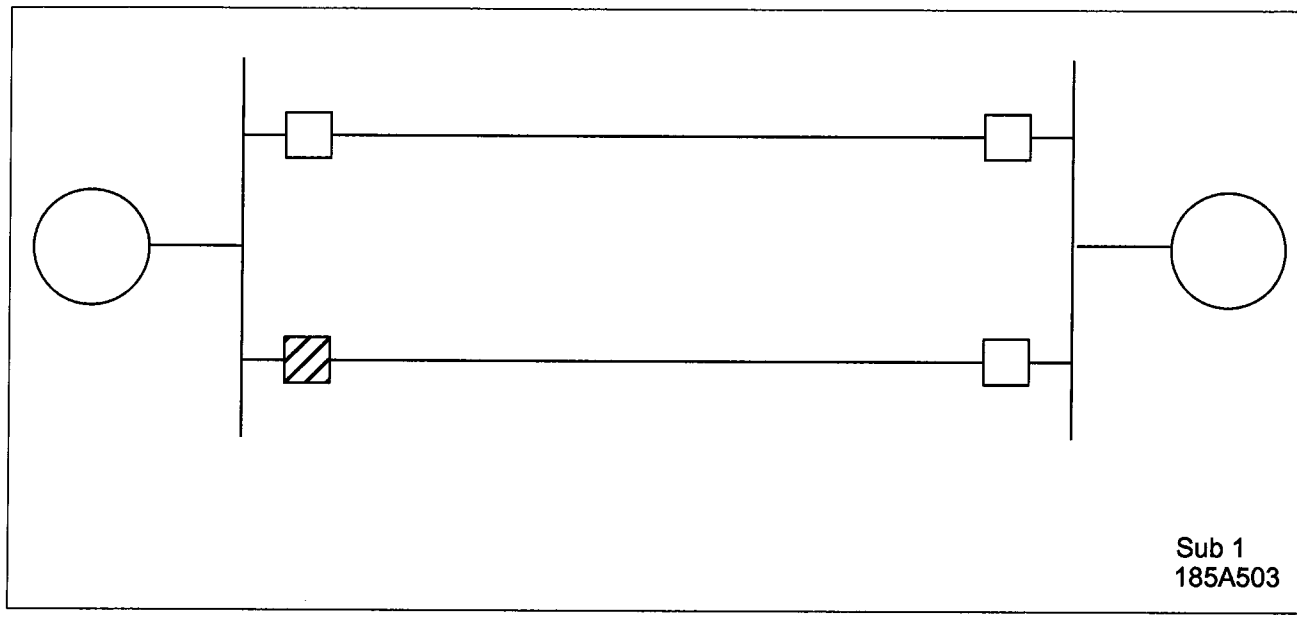

Figure 7. General System Used for Describing Type KDXG Relay Operations

2.7. Diode Bridge Assembly and Associated Network

Diode rectifier bridge assembly is a full-wave type using silicon medium power type diodes. DC output of this bridge is filtered by a capacitor and a choke network.The input to the rectifier bridge is shunted by a varistor and resistor combination to limit the input voltage at high current level.

2.8. Maximum voltage Network

Maximum voltage network consists of a tapped resistor (600, 2160, 2160 ohms taps) and 3 blocking diodes.

2.9. Operation Indicator (OI)

The operation indicator (OI) is a small clapper-type device. A magnetic armature is attracted to the magnetic core upon energization of the indicator. Also, during this operation, two fingers on the armature deflect a spring located on the front of the switch, which allows the operation indicator target to drop. The target is reset from the outside of the case by a push rod located at the bottom of the cover.

3. OPERATION

The relay is connected and applied to the system as shown in Figure 6 (page 6). The reactance unit closes its contacts when the reactive components of the impedance of the protected line becomes smaller than the relay setting. The ratio discriminator operates on single-line-to-ground faults in the faulted phase only.

The companion type KRT relay, contains a direc-

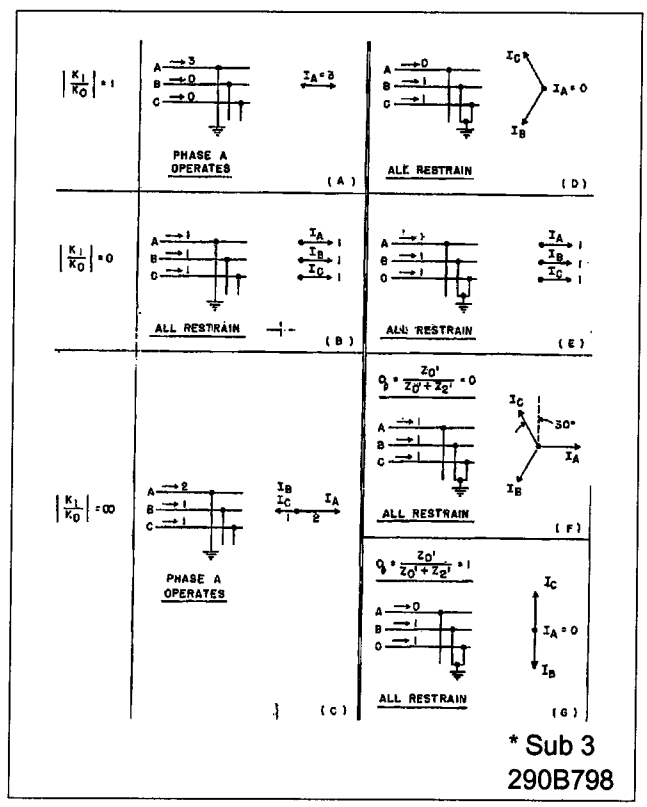

Figure 8. Response of Ratio Discriminator to Ground Faults, Assuming All Impedances in Phase

** Denotes change*

tional ground unit that provides the scheme with directional characteristics and a timer for zone 2 and zone 3 operation.

All three units, reactance, ratio discriminator and the ground directional unit operate simultaneously for single line-to-ground faults located within zone 1 of reactance unit setting.

For reversed single line-to-ground faults the scheme does not trip since the directional unit will have its contact open. For 2-phase-to-ground faults, or phase-to-phase faults, and 3-phase faults, tripping is blocked by the ratio discriminator. Additional blocking is obtained by the ground directional unit on phase-to-phase and 3-phase faults.

For zone 2 and 3 tripping, the reach of the reactance unit is switched by the timer. The timer is started by T1 relay that operates after the directional unit and ratio discriminator close their contacts.

Figure 6 shows device 50N used as an optional means of starting the timer if the D contacts of the 32T device are closed. This path bypasses the ratio discriminator contacts during low fault current periods. The use of this ground over-current unit allows tripping with no added delay if the ratio discriminator operates sequentially for distant faults.

3.1. Fundamentals of Distance Measurement

Figure 7 shows a typical two-circuit transmission system with a source of power at both ends of the line. Assume that a KDXG relay is installed at the shaded breaker location. For a ground fault on phase A the phase A reactance unit will see the following conditions.

Definition of Terms:

V_{AG} = phase A-to-ground voltage at bus H.

K_1 = portion of total positive-sequence or negative-sequence fault current flowing through relay location.

K_O = portion of total zero-sequence fault current flowing through relay location.

Z_{1L} = positive and negative-sequence impedance of the protected line.

I_{A1} = total positive-sequence fault current.

I_{A2} = total negative-sequence fault current.

I_0 = total zero-sequence fault current.

I_{0E} = adjacent line zero-sequence current.

Z_{0M} = mutual zero-sequence impedance between the two lines.

Z_{0L} = zero-sequence impedance of the protected line.

R_G = fault resistance.

$$I_A = K_1 I_{A1} + K_1 I_{A2} + K_O I_O \qquad (1)$$

$$V_{AG} = K_1 I_{A1} n Z_{1L} + K_1 I_{A2} n Z_{1L} + K_0 I_0 n Z_{0L} + I_{oE} n Z_{0m} + 3 I_0 R_G \qquad (1A)$$

but $K_1(I_{A1} + I_{A2}) = I_A - K_O I_O$ from (1)

then:

$$V_{AG} = I_A n Z_{1L} - K_O I_O n Z_{1L} + K_O I_O n Z_{OL} + I_{OE} n Z_{OM} + 3 I_O R_G$$

$$= nZ_{IL}\left[I_A + K_O I_O \frac{(Z_{OL} - Z_{IL})}{Z_{IL}} + I_{OE}\frac{Z_{OM}}{Z_{IL}}\right] + 3 I_O R_G \qquad (2)$$

Now, let the relay current I_R be:

$$I_R = I_A + K_O I_O \frac{(Z_{OL} - Z_{1L})}{Z_{1L}} + I_{OE} \frac{Z_{OM}}{Z_{1L}} \quad (3)$$

then $$Z_R = \frac{V_{AG}}{I_R} = nZ_{1L} + R_G \frac{3I_O}{I_R} \quad (4)$$

The first term nZ_{1L} is directly proportional to the distance from the fault to the relay and is independent of conditions external to the protected section.

The second term is a function of fault resistance, R_G, and has an effect of pure resistance if I_O is in phase with I_R. This will be nearly true, since in general all the impedances involved in equation for Z_R will have nearly the same phase angle, unless line resistances are very large, and also since I_A, I_O, and I_{OE} are usually nearly in phase for this type of fault. Assuming that this term is resistive the reactance unit ignores it by sensing only the imaginary component of Z_R, jX_R,

then

$jX_R = jnX_{1L}$

The relay current

$$I_R = I_A + I_O K_O \left[\frac{Z_{OL} - Z_{1L}}{Z_{1L}}\right] + I_{OE} \frac{Z_{OM}}{Z_{1L}}$$

is obtained by supplying the reactance unit current circuit with line current, residual current, and the residual current from parallel line. The correction of residual currents by factors

$$\frac{Z_{OL} - Z_{1L}}{3Z_{1L}} \text{ and } \frac{Z_{OM}}{3Z_{1L}}$$

is done by means of taps on the auxiliary current transformer type 1K. The factor 3 is needed since IO = 1/3 residual current in the protected line and IOE = 1/3 residual current in parallel line.

3.2. Principle of Operation of Reactance Unit

The reactance unit is an induction cylinder unit having directional characteristics. Operation of this type of unit depends on the phase relationship between magnetic fluxes in the poles of the electromagnet.

One set of poles is energized by two pairs of current windings, where one pair receives the line current and the second pair the residual current from the protected and parallel lines as modified by auxiliary current transformer tap settings.

The second set of poles is energized by the line-to-ground voltage as modified by the compensator voltage.This compensator voltage determines the reach of the reactance unit.

Compensator T is designed so that its mutual reactance, X, has known and adjustable values as described under **"CHARACTERISTICS AND SETTINGS"**. The mutual reactance of a compensator is defined here as the ratio of secondary induced voltage to primary current and is equal to T. the secondary compensator voltage is in series with the line-to-ground voltage as modified by the autotransformer setting. The flux in the voltage-energized poles is so adjusted that it is in phase with the resultant voltage, V_1, (see Figure 5a, page 5). Cylinder connections are such that it closes its contacts whenever the flux in the voltage polarized poles lags the flux in the current polarized poles.

Figure 5a illustrates the operation of the reactance unit. Here V_{LG} is the line-to-ground voltage leading the line current by an angle α. Compensator voltage is shown here as $-jX_L I_R$. ϕ_V is the flux due to the voltage ($V_{LG} - jX_L I_R$). ϕ_I is the flux due to the relay current. Since flux ϕ_V is the flux leading ϕ_I the cylinder unit will have restraining torque keeping its contacts open.

The balance will occur when flux ϕ_V will be in phase with flux ϕ_I. For this to happen, compensator voltage $jX_L I_R$ must be equal to $V_{LG} \sin\alpha$– the magnitude of the reactive component of the relay voltage, as shown in Figure 5b, page 5.

For faults inside the protected zone (see Figure 3c, page 3) the compensator voltage will be larger than the V $\sin\alpha$ value, this makes the flux ϕ_V lag the flux ϕ_I and cause the relay contacts to close. For faults beyond the balance point (Figure 5d, page 5) compensator voltage will be smaller than $V_{LG} \sin\alpha$. This will make the voltage flux ϕ_V lead the current flux ϕ_I and restrain relay from contact closing. For faults behind the relay or for reverse power flow the reactance unit will keep its contact closed (Figure 5e, page 5) since the current flux will always lead the voltage flux independent of the value of compensator voltage.

3.3. Principles of Operation of Ratio Discriminator

The ratio discriminator unit (RD) is a polar type relay operating on a voltage derived from the line current in the transformer DT. Before this voltage is applied to the polar unit (RD) it is rectified, filtered, and applied across the voltage divider resistor (RS). 70 percent of this voltage is tapped off the RS-resistor and applied to the polar unit coil. This coil (RD) is connected in series with a diode (D3) in conducting

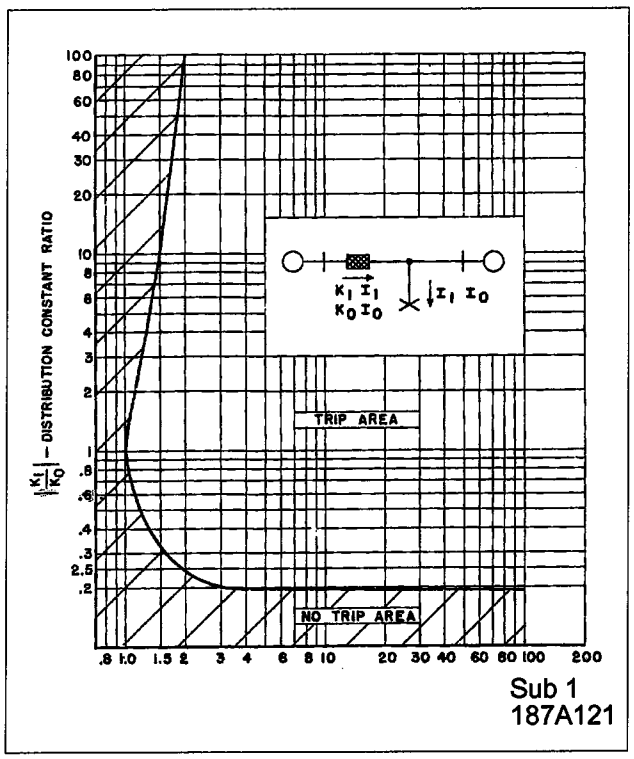

Figure 9. Typical Operating Characteristics of the Ratio Discriminator as a function of Current Distribution Factor Ratio and Operating Current

direction. The full voltage developed across RS-resistor is applied to the ratio discriminators networks in the two adjacent phases through diodes D1 and D2. with no line currents in the adjacent phase relays the polar unit will operate on a minimum of 1 ampere of current flowing through the primary of the DT-transformer. If there is a line current in any one of the adjacent phases, the full voltage developed across RS-resistor in those relays is applied to the blocking side of the diode D3 through Terminal 11 so that if this voltage should become a higher positive potential than the operating voltage applied to the RD-coil, the diode D3 becomes non-conducting, the RD-unit will be prevented from operation. This means that in order for an operating unit to trip, current in its line must be at least $\frac{100\%}{70\%}$ = 1.43 times the larger of the adjacent phase currents. Conversely, the adjacent phase current required to block tripping should be more than 0.7 times the faulted phase current. This nominal value of 0.7 varies from 0.5 to 0.75 depending upon the magnitude and phase of fault currents (see Figure 11, page 11).

Thus for single line-to-ground fault on a simple radial system there will be operating voltage on the relay of the faulted phase only, with little or no blocking (due to load current) from two other phase relays. For two phase-to-ground faults, equal currents will restrain each other, and the unfaulted phase will experience all blocking and no operating voltage.

Similar conditions will exist on phase-to-phase faults, except additional selectivity is provided by the ground directional unit since it will not operate in the absence of zero-sequence quantities.

For 3ø faults or loads, equal or nearly equal currents will produce the same restraint in all 3 units, and ground directional unit will provide additional selectivity.

For most complicated networks, where only a part of the total zero or positive sequence fault current flows through the protected line, the ratio discriminator response is analyzed below:

Let K1 = fraction of the total positive-sequence and negative-sequence fault current flowing in the protected line.

KO = fraction of the total zero sequence fault current flowing in the protected line.

For Single Line-to-Ground Fault (Figure 8)

For $\frac{K_1}{K_O} = 1$ Figure 8a

Phase A operates since all fault currents flows through the faulted phase

For $\frac{K_1}{K_O} = 0$ Figure 8b

This case corresponds to the extreme condition where there will be no positive sequence current flow on the relay side of the protected line. Equal zero sequence currents will flow in all three phases and ratio discriminator is shown in Figure 9, page 10. The area above the curve represents the tripping zone of the ratio discriminator.

For $\frac{K_1}{K_O} = \infty$ (Figure 8c)

This case corresponds to the extreme condition where there will be very little or no zero sequence current on the relay side of the protected line. The response of ratio discriminator as function of $\frac{K_1}{K_O}$ ratio for different current level is shown in Figure 9. The area above the curve represents the tripping zone of the ratio discriminator.

For Two Line-to-Ground Faults

For correct operation of the ground distance scheme on the two line-to-ground type of faults the ratio discriminator should block the tripping.

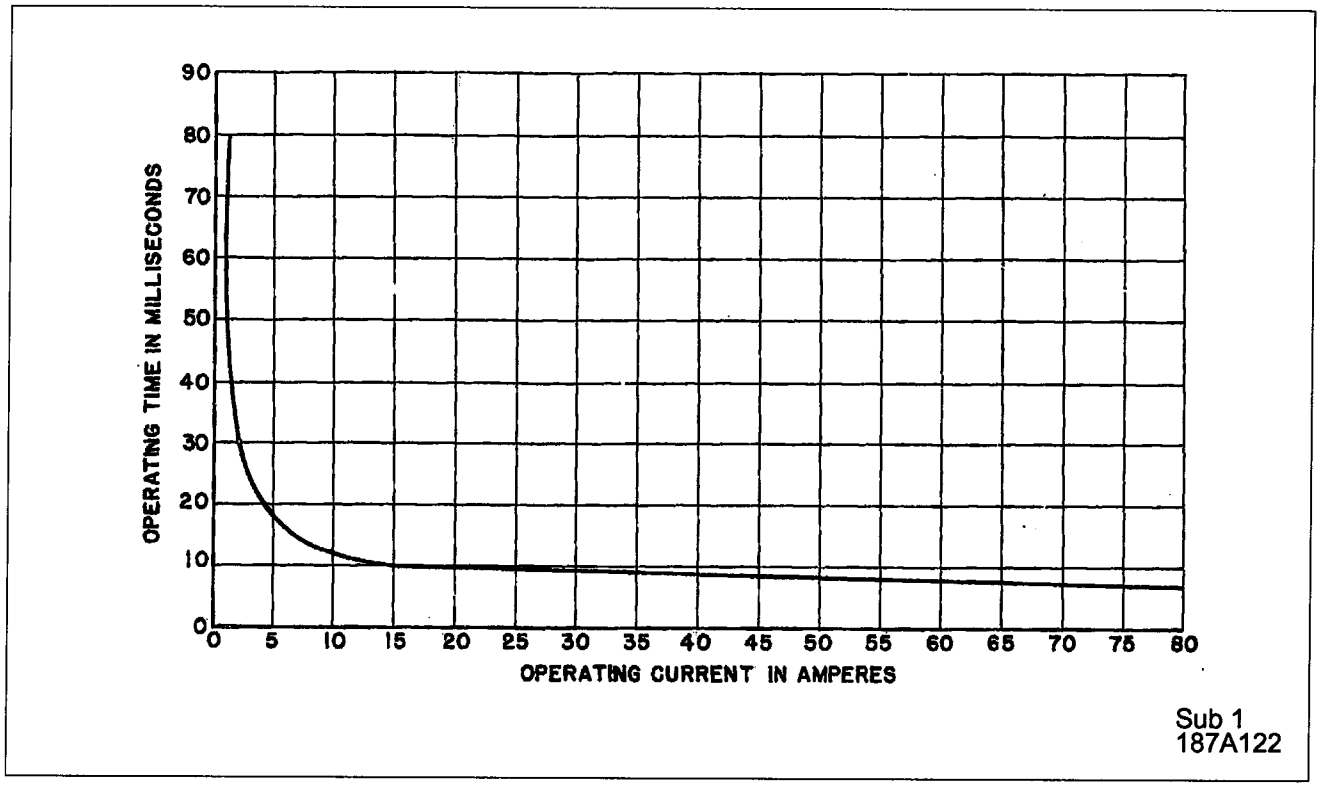

Figure 10. Typical Operating Time Curve of the Ratio Discriminator Unit

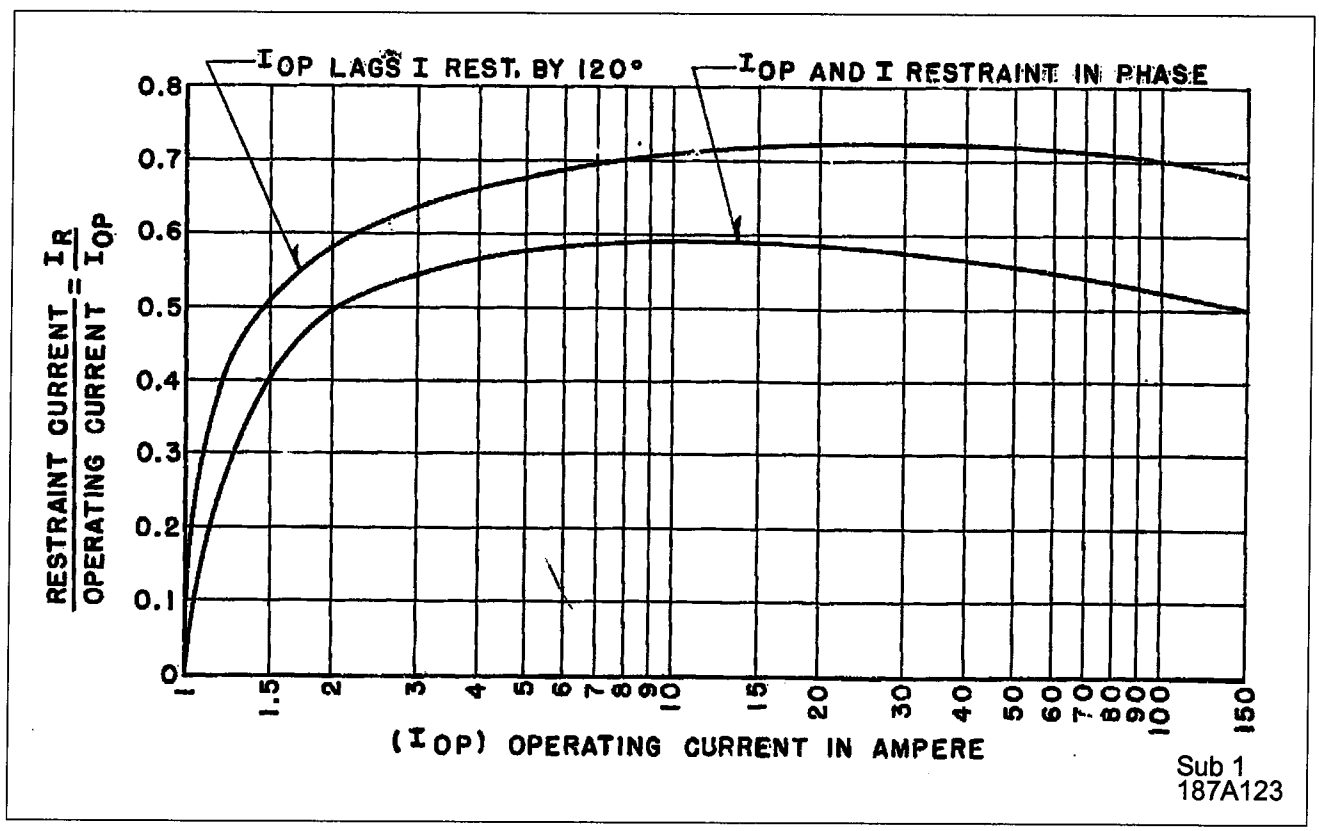

Figure 11. Typical Ratio Discriminator Trip Characteristic (Ires/Iop) as Function of Operating Current LOP

For $\frac{K_1}{K_O} = 1$ (Figure 8d)

Blocking is obtained by the two faulted phases blocking each other, and the unfaulted phase.

For $\frac{K_1}{K_O} = 0$ (Figure 8e)

This case corresponds to the extreme condition where little or no positive sequence current flows on the relay side of the protected line. Since equal currents are flowing in all three phases, all discriminators block the tripping.

For $\frac{K_1}{K_O} = \infty$

A) $q = \frac{Z'_0}{Z'_0 + Z'_2} = 0$ (Figure 8f)

B) $\frac{Z'_0}{Z'_0 + Z'_2} = 1$ (Figure 8g)

Here Z'_0, Z'_2 are total system zero and negative-sequence impedances including fault resistance. All discriminators will block tripping.

4. CHARACTERISTICS

The type KDXG relay is available in 48, 125, and 250 dc rating.

4.1. Reactance Unit

The minimum reach of the reactance unit is 0.2 ohms. The relay has five basic settings: T = 0.2, 0.3, 0.5, 0.8, 1.1 ohms. These settings by use of auto-transformers taps are expanded by a factor of 10.

The range settings for the reactance unit are tabulated below and show the range of settings obtained for zone 3 if the zone 1 and zone 2 are set within the following range:

Table 1:

If zone 1 and zone 2 range is:	Zone 3 range is:
0.2 - 2.0 ohms	0.5 - 5.0 ohms
0.3 - 3.0 ohms	0.75 - 7.5 ohms
0.5 - 5.0 ohms	1.25 - 12.5 ohms
0.8 - 8.0 ohms	2.0 - 20 ohms
1.1 - 11 ohms	2.75 - 27.5 ohms

By use of auto-transformer taps the maximum reach for zone 1 is 11 ohms.

The reactance unit is accurate within ± 3 percent for the range 5° -- 90° over the following current range:

Table 2:

0.2 – 0.3 reactive basic ohms	6 – 75 amp.
0.5 reactive basic ohms	5 – 60 amp.
0.8 – 1.1 reactive basic ohms	2.5 – 40 amp.

The reactance unit has a minimum sensitivity of 0.7 amp with zero volts for $T_L = T_O = .2$ setting (voltage terminals short circuited) and 0.3 amp for $T_L = T_O = 1.1$.

The speed of operation of the reactance units is shown on Figure 16 (page 19). The curves indicate the time in milliseconds required for reactance unit to close its contacts for tripping after the inception of a fault at any point on a line within the relay setting, line current and residual current circuits connected in series.

The reactance unit has continuous rating of 77 volts and 5 amp ac. The one second current rating is 140 amp.

4.2. Ratio Discriminator

The ratio discriminator has a minimum pickup current of 1 amp with no restraint from other relays. It has continuous rating of 5 amp ac. The time-current operating curve for the ratio discriminator unit is shown in Figure 10 (page 11). The one second current rating is 140 amp.

4.3. Auxiliary Current Transformer (Type IK)

Auxiliary current transformer (Figure 12, page 13) has taps representing the part of the complete winding. There are two windings: one marked "protected line" has taps that represent factor $C = \frac{Z_{0L} - Z_{1L}}{3Z_{1L}}$ and the second winding marked "parallel line" has taps representing factor $C^1 = \frac{Z_{OM}}{3Z_{1L}}$. The taps are marked as follows: 0 – 0.1 – 0.2 – 0.4 – 0.7 – 1.0.

4.4. Trip Circuit

The main contacts will safely close 30 amperes at 250 volts dc, and the seal-in contacts of the indicating contactor switch will safely carry this current long enough to trip circuit breaker. The operational indicator unit has a 1 ampere pickup and a coil resistance of 0.1 ohm dc.

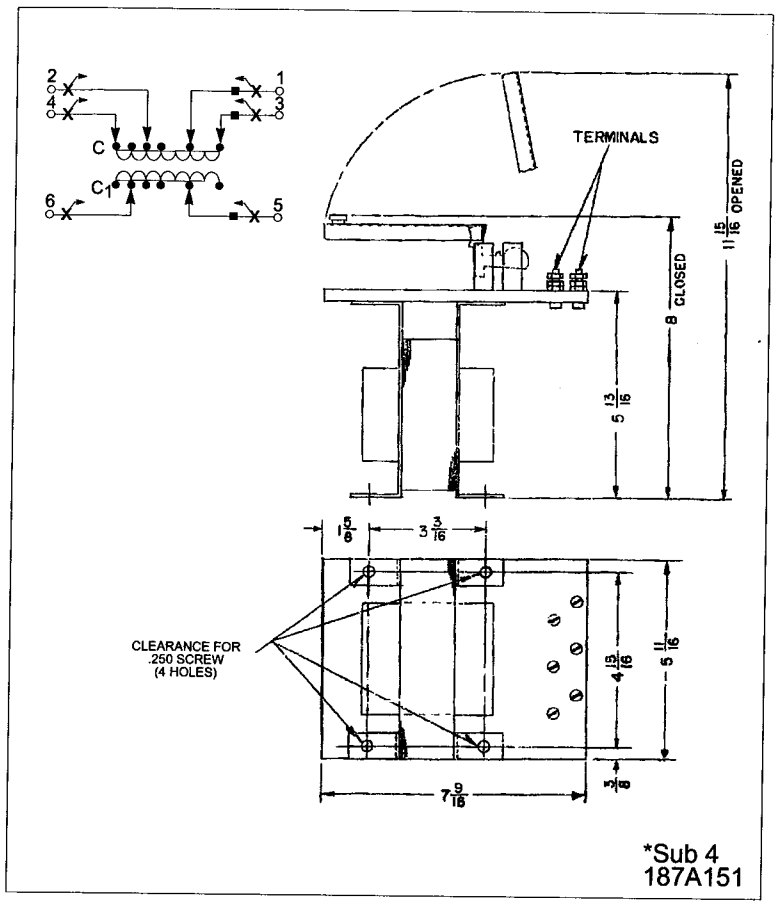

Figure 12. Outline — Drilling Plan for Type IK Auxiliary CT

** Denotes change*

type IN1095 diodes. The diodes have 0.75 amp continuous rating, leakage current of 0.5 MA at rated peak inverse voltage of 500 volts, at 50°C. Forward voltage drop at 0.75 amp current, at 50°C, is below 1 volt. The D3 diode consists of two Germanium diodes type IN93. The IN93 diode has maximum peak inverse voltage rating of 300 volts, and 75 mA continuous current rating.

5. SETTING CALCULATIONS

5.1. Reactance Unit

The reactance unit is set according to the following equations:

$$X_1 = \frac{10T}{M_C + M_F} \quad \text{for zone 1 and zone 2}$$

$$X_1 = \frac{25T}{M_C + M_F} \quad \text{for zone 3}$$

Where:

X_1 = The positive sequence reactance of the zone to be protected. $T = T_L = T_O$ are compensator setting values (0.2, 0.3, 0.5, 0.8, or 1.1). T_O is set to equal T_L.

M_C, M_F are auto-transformer output voltage taps. Coarse tap settings, M_C, can be made in steps of 10 percent and fine tap settings, M_F, can be made in 1 percent steps.

The setting calculations procedure is as follows:

1. Choose a value of $T = T_L$ closest to the desired positive sequence value (X_1) for the desired zone of protection, but never larger than X_1.
2. Find M_F and M_C setting for each zone by using the following equations:

$$M_C + M_F = \frac{10T}{X_1} \quad \text{for zone 1 and zone 2}$$

$$M_C + M_F = \frac{25T}{X_1} \quad \text{for zone 3}$$

where T is tap value selected above. The whole number part of the answer represents the M_C setting and the decimal fraction part represents the M_F tap setting.

5.2. Sample Calculations for Reactance Unit Setting

Determine the settings for the protection of the following line: (All values in percent)

5.2.1. Section 1: 14.5 Miles Long

Z_1 = 3.29 + j 11.40

Z_O = 9.50 + j 39.2

Z_{OM} = 6.23 + j 25.4 (to a parallel line)

5.2.2. Section 2: 18.93 Miles Long

Z_1 = 5.63 + j 15.70

Z_O = 13.93 + j 48.32

All line constants are in percent on a 138 kV, 200 MVA basis. R_V = voltage transformer ratio = 1200:1. R_C = current transformer ratio = 600:5.

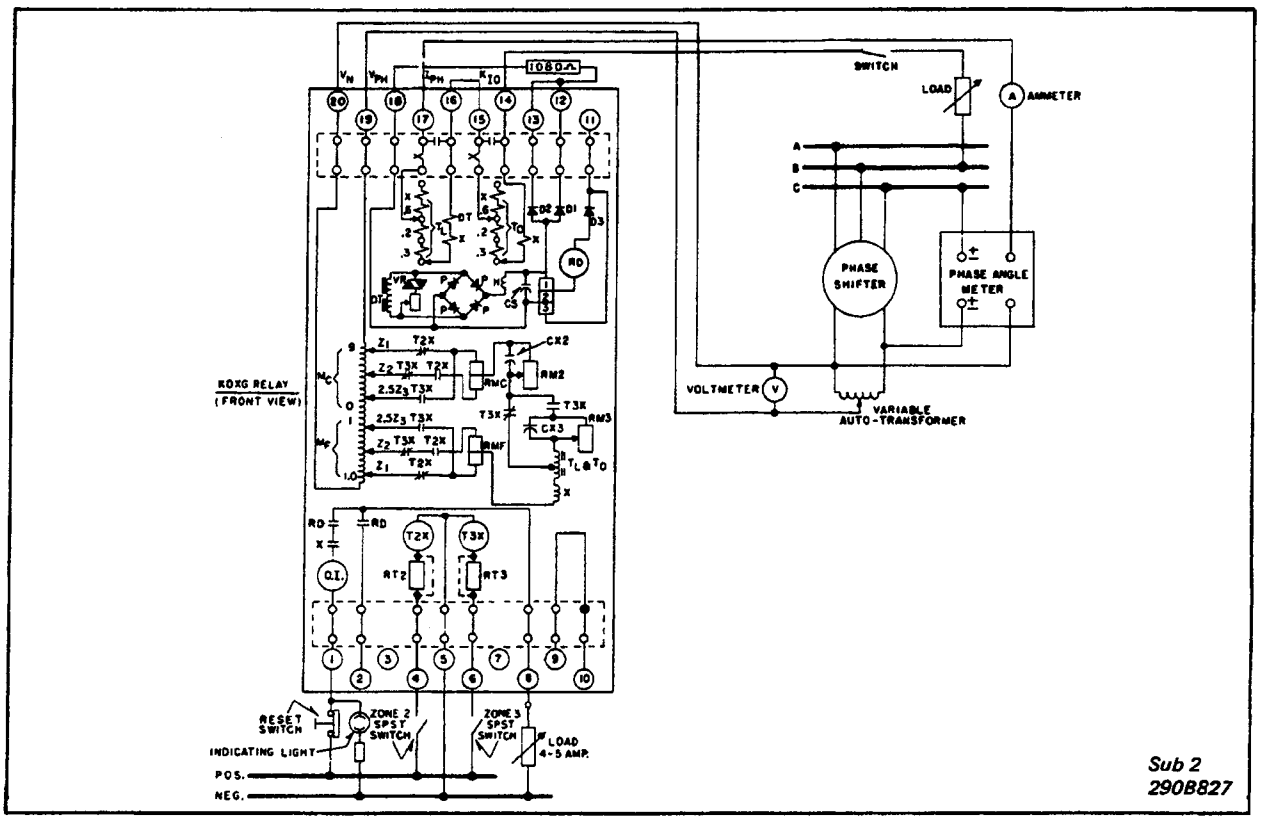

* Sub 2
290B827

Figure 13. Test Connections for Type KDXG Relay

** Denotes change*

5.2.2. Section 2: 18.93 Miles Long

Z_1 = 5.63 + j 15.70

Z_O = 13.93 + j 48.32

All line constants are in percent on a 138 kV, 200 MVA basis. R_V = voltage transformer ratio = 1200:1. R_C = current transformer ratio = 600:5.

A. Compute the reactive relay ohms.

$$X_1(\text{ohms}) = \frac{10(KV)^2}{KVA}\left(\frac{Rc}{Rv}\right)(X_1\%)$$

$$= \frac{10(138)^2(120)}{200,000(1,200)}(X_1\%)$$

X_1 (ohms) = (0.0952)X_1% = relay ohms where X_1% values are based on 138 kV and 200 MVA.

B. Compute setting for zone 1 (80% of section 1 to be protected).

Desired setting:

X_1 = 0.0952 (11.40) x 0.8 = .868 ohms
* Select T, M_C, and M_F taps.

1. T setting closest to .868 ohms is:
   $T = T_L = T_O = .8$

2. $$M_C + M_F = \frac{10T}{X_1} = \frac{10 \times (0.8)}{0.868} = 9.22 = 9.0 + 0.22$$

3. Zone 1 should be set:
   $T_L = T_O = 0.8$
   $M_C = 9.0$
   $M_F = 0.2$

C. Compute setting for zone 2 (100 percent protection for section 1, and 50% protection for section 2).

Desired setting:

X_1 = 0.0952 [11.4 + 15.7 (0.5)] = 1.83 ohm

1. Select M_C, M_F taps

2. Now use the same $T = T_L = T_O = .8$ setting as for zone 1.

$$M_C + M_F = \frac{10 + (0.8)}{X_1} = \frac{8}{1.83} = 4.37 = 4.0 + 0.37$$

3. Zone 2 should be set:

   $M_C = 4.0$
   $M_F = 0.4$

D. Compute setting for zone 3 (100 percent protection for sections 1 and 2.

X_1 = 0.0952 (11.4 + 15.7) = 2.58 ohms.

1. Select M_C and M_F taps

2. Using $T = T_L = T_O = 0.8$ (same as for zone 1)

$$M_C + M_F = \frac{25T}{X_1} = \frac{20}{2.58} = 7.75 = 7.0 + 0.75$$

3. Zone 3 should be set:

   $M_C = 7.0$
   $M_F = 0.8$

All settings will be within 1.0% of desired setting.

5.3. Auxiliary Current Transformer IK

The auxiliary current transformer winding marked "protected line" (terminals 1 and 2) is set according to the formula:

$$C = \frac{Z_{OL} - Z_{1L}}{3Z_{1L}}$$

where Z_{OL} represents the zero sequence impedance of the protected line, and Z_{1L} the positive sequence impedance of the protected line.

The coefficient C represents the portion of the residual current of the protected line that has to be added to the relay current to compensate for effect of zero sequence current.

One winding of the auxiliary CT (terminals 3 and 4) (Figure 12, page 13) is connected in series with relay residual current circuit. The residual current circuit of the protected line (terminals 1 and 2) is connected across the taps of the same winding so that difference between taps will be equal to coefficient C.

If the Z_{OL} and Z_{1L} impedances have the same angle the relay will correctly measure the reactive component of Z_{1L}. If there is a wide difference between the two angles, use reactive components of Z_{1L} and Z_{OL} to compute C coefficient. In this case

$$C = \frac{X_{OL} - X_{1L}}{3X_{1L}}$$

The second winding of the auxiliary current transformer marked "parallel line" (terminals 5 and 6) is set for compensation of the effects of residual current in the parallel line due to the zero sequence mutual impedance between the two lines.

Sub 2
899C121

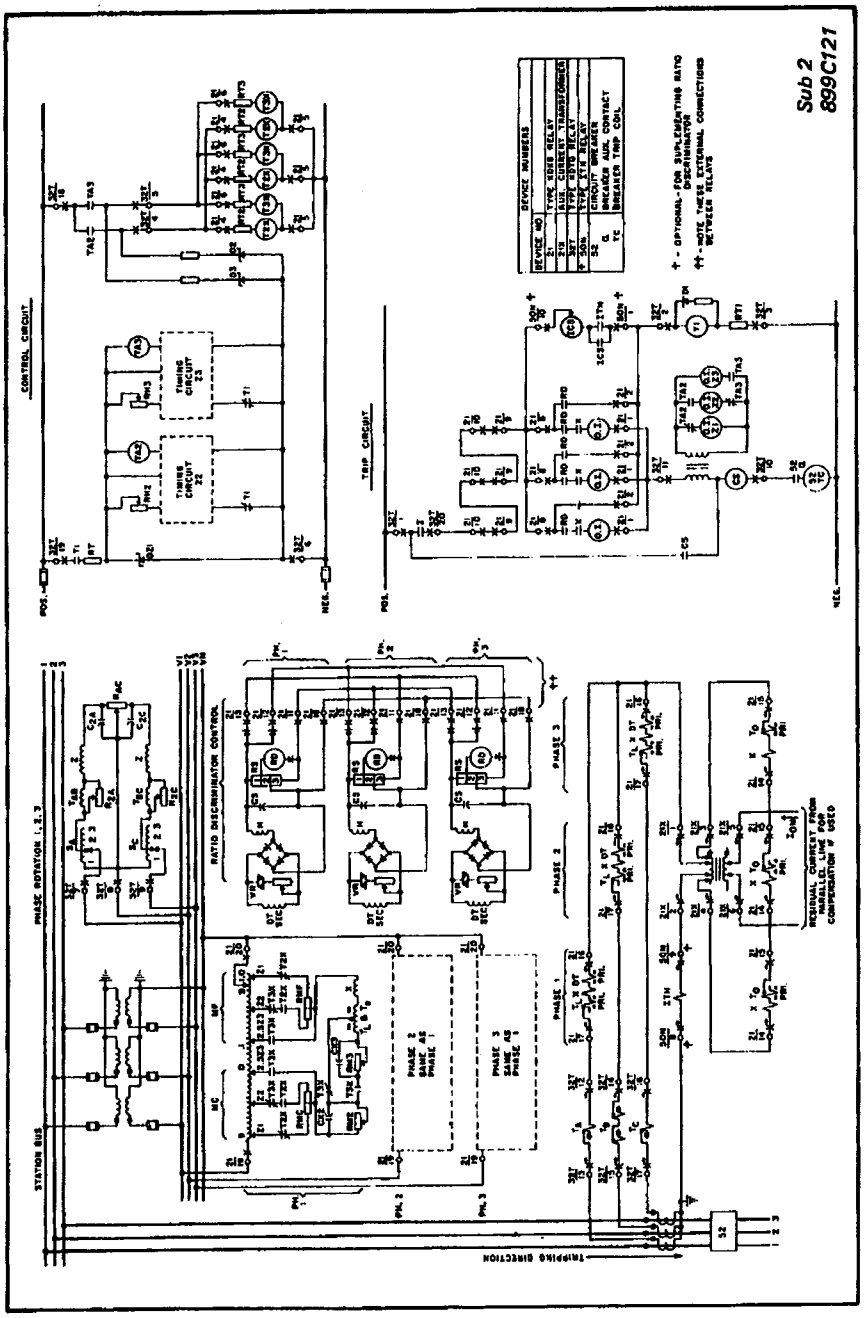

Fig. 14. External Schematic for Type KDXG and KDTG Relays

Figure 14. External Schematic for Type KDXG and KDTG Relays

The necessary setting is computed according to the following formulas:

$$C^1 = \frac{Z_{0M}}{3Z_{1L}} \text{ or } C^1 = \frac{X_{0M}}{3X_{1L}}$$

where Z_{0M} = mutual zero sequence impedance between two lines.

The taps of the "parallel line" winding are connected in series with the residual ct circuit of the parallel line.

The taps are set so that difference between the taps is equal to the desired C^1 value.

The desired tap settings should be made to the nearest tap value.

NOTE: Terminal 5 and 6 of auxiliary current transformer, IK, should be left open circuit when not connected to the parallel line ct's.

5.4. Sample Calculations of IK-Settings

Using the same line as for the reactance unit sample computations, compute constants C and C^1.

A. Coefficient C is computed for zone 1 only since zone 1 should be set as exactly as possible. Since the coefficient represents the ratio of two impedances, use percent quantity directly.

$$C = \frac{Z_{0L} - Z_{1L}}{3Z_{1L}} = \frac{9.50 + J39.2 - 3.29 - J11.4}{3(3.29 + J11.4)}$$

$$C = \frac{28.49\angle 77.4°}{35.6\angle 73.9°} = 0.80\angle 3.5° \approx 0.80$$

Hence, the auxiliary transformer setting for protected line C = .8.

B. Coefficient C1 is calculated as follows:

$$C^1 = \frac{Z0M}{3Z_{1L}}$$

$$Z_{0M} = (6.23 + J25.4)$$

$$Z_{1L} = 3.29 + j11.4$$

$$C^1 = \frac{(6.23 + j25.4)}{3(3.29 + j11.4)} = \frac{26.2\angle 76.2°}{35.6\angle 73.9°} = 0.736\angle 2.3° \approx 0.738$$

Hence, the auxiliary current transformer setting for the parallel line is:

$C^1 = 7$

5.5. Ratio Discriminator

There is no setting to be made on the ratio discriminator. The operating unit will operate at 1 amp with no restraining current in two other units.

6. SETTINGS

The KDXG relay requires two compensator settings, T_L and T_O, three autotransformer settings (one for each zone), and one for two auxiliary current transformer settings, C and C^1.

CAUTION

Since the tap block screws carry operating current, be sure that the screws are turned tight.

In order to avoid opening current transformer circuits when changing taps under load, start with RED handles FIRST and open all switchblades. Chassis operating shorting switches on the case will short the secondary of the current transformer. Taps may then be changed with the relay either inside or outside the case. Then reclose all switchblades making sure the RED handles are closed LAST.

6.1. Compensator Settings

T_L and T_O are set for the value calculated under "Setting Calculation." Each setting is made by connecting the two links between taps so that the sum of the numerals between the two tap screws is equal to the desired setting. For instance, if $T_L = T_O = .8$ ohms, as computed in the sample computation, the two lines on each side of the tap plate are connected so that T = .8 is set as sum of .2 and .6.

6.2. Autotransformer Settings

M_C and M_F settings are made for each zone. The autotransformer taps M_C and M_F are brought out to terminals on the tap plate and are connected to the voltage circuit of the reactance unit by means of leads marked "Z_1", "Z_2", and "$2.5Z_3$".

These Z_1, Z_2 and $2.5Z_3$ leads come out on each side of the tap plate inside the circles formed by M_C and M_F taps. The M_C circle of taps is located on the left-hand side of the tap plate when facing the relay and the M_F circle of taps is on the right-hand side of the tap plate.

The Z_1, Z_2, and $2.5Z_3$ leads should be connected to only that circle of M_C or M_F which surrounds them and should never be interchanged. There may be as much as three connections made to a single tap on

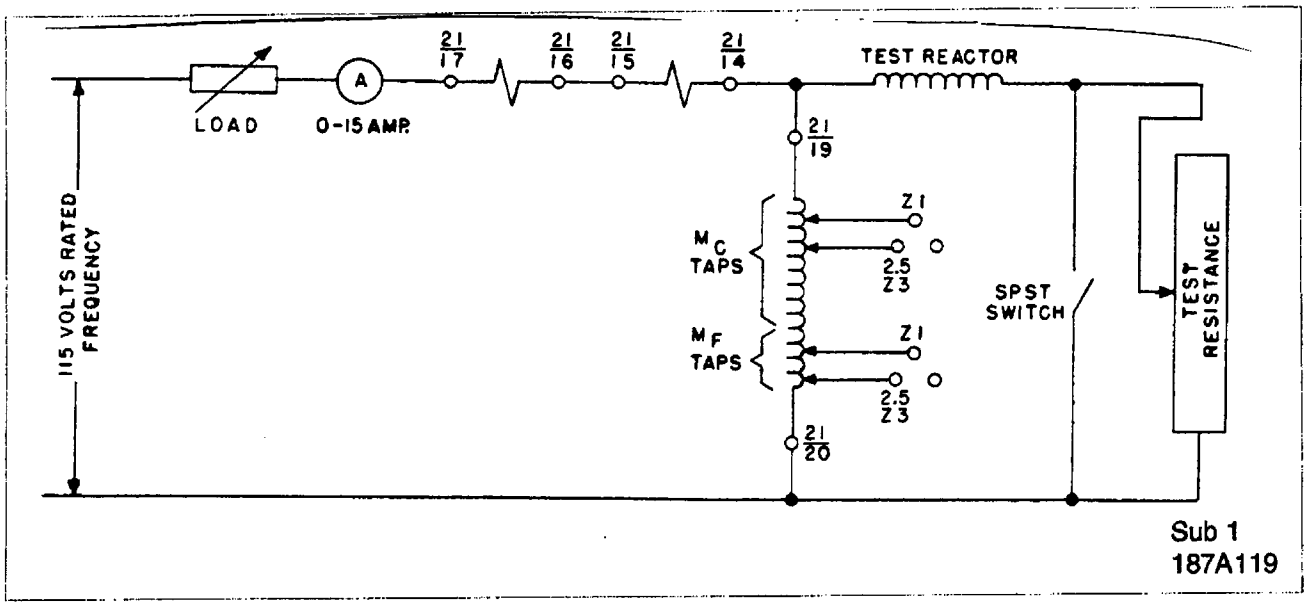

Figure 15. Circuit for Reactance Unit Phase Angle Adjustment

the M_C and M_F taps.

When making more than one connection to the tap, place the first lead over the insert of the desired setting. Replace and tighten the connecting screw. The same procedure is followed for 3rd screw if required. Using sample computation, Z_1 leads will be connected to

$$M_C = 9$$
$$M_F = .2$$

Z_2 leads will be connected to $M_C = 4$, $M_F = .4$.
$2.5Z_3$ leads will be connected to $M_C = 7$, $M_F = .8$.

6.3. Auxiliary Current Transformer

Auxiliary current transformer settings are made to compensate for the effects of residual currents in the protected and the parallel lines. Before the protected tap settings are made, the cover of the transformer should be completely open. Complete opening of the cover assures continuity in the residual ct circuits and isolates the transformer windings from the residual circuits.

The taps are set so the difference between the two taps is equal to the desired setting of C or C^1. For instance, C setting equal to ".8", as computed under the sample calculations is set as follows:

Connect leads coming out of opening marked "protected line" (Figure 17, page 23) to the terminals marked "C". Black lead (which is the polarity terminal) is connected to terminal marked ".2" and the white lead to the terminal marked "1.0". The difference between the two taps 1.0 – .2 = .8, is the desired "C" setting. Physically, this is done as follows:

Remove the top nut from the desired terminal. Place the lug of the proper lead on the terminal, and replace the locking nut. Make sure that nut holds the lug snugly against the terminal to avoid the possibility of developing a loose or high resistance connection.

The leads coming out of opening marked "relay" are connected to the terminals "0" and "1,0" in the row marked "C" with the black lead on 0 and the white lead on 1.0. This connection is the same for all "C" and "C^1" values less or equal to 1. For values of C larger than 1, the "protected line" leads are set for C = 1, and the "relay" leads are connected for the reciprocal (1/C) of the desired C setting. C^1 value, which was computed in our example to be = .7 is made as follows: leads coming out of opening marked "parallel line, are to be connected to the terminals marked C^1. Black lead (plus polarity lead) is connected to terminal ".0" and white lead to terminal "0.7". Difference between taps 0.7 – 0.0 = 0.7 is the desired setting C^1 = 0.7.

After the setting is completed the cover should be closed to restore the connection between the transformer winding and the external terminals.

7. INSTALLATION

The relays should be mounted on switchboard panels or their equivalent in a location free from dirt, moisture, excessive vibration and heat. Mount the relay vertically by means of the four mounting holes on the flange for semi-flush mounting, or by means of

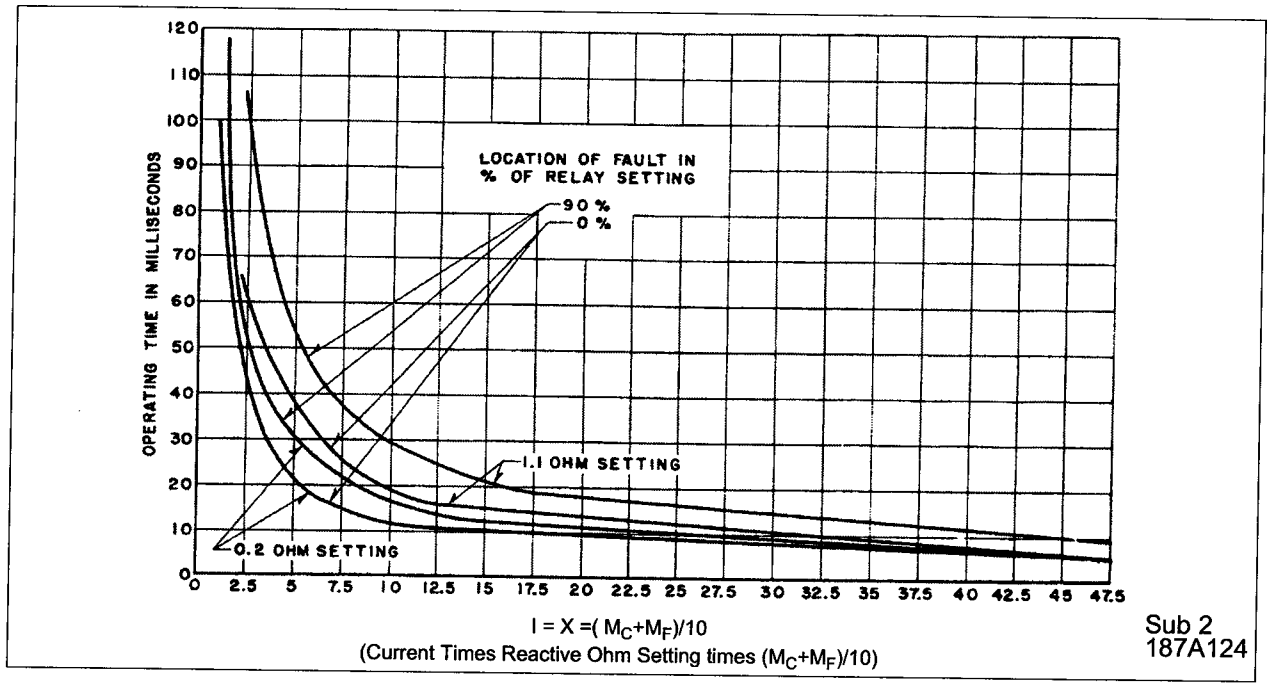

Figure 16. Typical Operating Time Curves of the Reactance Unit

the rear mounting stud or studs for projection mounting. Either a mounting stud or the mounting screws may be utilized for grounding the relay. The electrical connection may be made directly to the terminals by means of screws for steel panel mounting or to the terminal studs furnished with the relay for thick panel mounting. The terminals' studs may be easily removed or inserted by locking two nuts on the stud and then turning the proper nut with a wrench. For detailed Flexitest case information refer to I.L. 41.076.

8. ROUTINE TEST

The proper adjustments to insure correct operations of this relay have been made at the factory. Upon receipt of the relay, no customer adjustments, other than those covered under "SETTING" should be required.

The following check is recommended to insure the relay in proper working order.

8.1. Visual Check

Give visual check to the relay to make sure there are no loose connections, broken resistors, or broken wires.

8.2. Reactance Unit Check

1.Connect relay as shown in Figure 13 (page 14) and make the following settings:

M_C, zone 1 = 9.0

M_F, zone 1 = 1.0

T_O = TL = 0.2 ohm

Adjust the voltage for 2.4 volts and the phase shifter for current lagging voltage by 90°.

Increase current until the contacts just close. This current should be within ±5% of 7 amperes, (6.65 – 7.35).

2. Make the following settings:

A.

		M_C	M_F
For:	Zone 1	2.0	0.5
	Zone 2	1.0	0.8
	Zone 3	9.0	1.0

B. Set $T_O = T_L$ = 1.1 ohms = .3 + .2 + .6

This setting corresponds to

$$X = \frac{(1.1 + 1.1)10}{2.5} = 8.8 \text{ ohms for zone 1}$$

This equation is used for testing purposes only. the two T_O and T_L settings are added only, when for test purposes, the same current is passed through line current circuit (terminals 16 and 17) and the residual current circuit (terminals 19 and 15). Therefore, relay reach during test is doubled. In normal operation line current passes through only one current circuit (I_L), and the residual current circuit (I_O) is used for compensation for the effects of zero sequence quantities

only.

3. Zone 2 and zone 3 switches open.
4. Adjust the phase shifter for 90° current lagging the voltage.
5. With terminal voltage at 44 volts, increase current until contacts just close. This current should be within ±6% of 5 amps. (4.7 - 5.3 A).
6. Adjust phase shifter for 45° current lagging the voltage and adjust voltage for 44 volts, increase until contacts just close. This current should be between 3.30 and 4.1 amperes, if the phase angle meter is accurate within ±2 degrees.
7. Close zone 2 switch.
8. Adjust voltage for 38 volts and phase shifter for current lagging voltage by 90°.
9. Increase current until contacts just close. This current should be between 3.20 – 3.5 amp.
10. Close zone 3 and zone 2 switches.
11. Adjust voltage for 27.5 volts and phase shifter for current lagging the voltage by 90°.
12. Increase current until contacts just close. This current should be between 4.7 – 5.3 amperes.

    This completes the check of operation of the reactance unit.

8.3. Ratio Discriminator Unit

1. With relay in the case connected as per Figure 13. Pass 0.5 amp ac current through terminals 17 and 16 only. Increase current until ratio discriminator unit just picks up. This should occur at 1 ampere (± 10%).
2. Remove 1080 ohm resistor and connect a 10,000 ohm resistor in series with terminal 11. . Apply 225 volts dc across terminal 12 and the 10 K resistor, and across 13 and the 10 K resistor with plus polarity on terminals 12 and 13. Measure current through terminal 11. It should be below 0.5 milliamperes. Reverse polarity and apply 125 Vdc. The current should be approximately 9 milliamperes.
3. Remove the 10 K resistor and apply 25 volts dc from terminal 11 to terminal 18, with positive polarity on terminal 11. The current should read approximately 12 mA. Reverse the polarity and apply 10 Vdc. The current should read approximately 10 mA.
4. Apply about 3 amps of ac current to terminals 17 and 16. Measure dc voltage from right-hand polar unit terminal to terminal 18, and from terminal 13 to terminal 18. Ratio between the first voltage and this voltage should be (.65 to .80).

8.4. Operation Indicator (OI)

Close the main relay contacts and pass sufficient dc current through the trip circuit to drop the indicating target. This value of current should be not less than 1.0 amperes nor greater than 1.2 amperes.

9. REPAIR CALIBRATION

Use the following procedure for calibrating the relay if the relay has been taken apart for repairs or the adjustments disturbed.

For best results in checking calibration, the relay should be allowed to warm up for approximately one hour at rated voltage. However, a cold relay will probably check to within two percent of the warm relay.

9.1. Autotransformer Test

Disconnect all Z_1, Z_2 and $2.5Z_3$ leads from the taps. Apply 100 volts ac to terminals 19 and 20. Check voltages on M_C taps between the tap "0" and all successive M_C taps, starting at tap "1". Voltage readings should be 10, 20, 30, 40, 50, 60, 70, 80, 90 volts (±.1volt).

Then check M_F taps voltage between "0" tap on M_C scale and all successive M_F taps starting with tap marked "1". Voltage readings should be 1, 2, 3, 4, 5, 6, 7, 8, 9, 10 volts respectively. Voltage across taps 0.1, 0.2, 0.3, 0.4, 0.5 should not vary more than ±.1volt.

9.2. Reactance Unit Test (Cylinder Unit)

A. Contact Gap Adjustment

The spring type pressure clamp holding the stationary contact in position should not be loosened to make the necessary gap adjustments. With moving contact in open position against right-hand stop on bridge, screw in stationary contact until both contacts just make, then screw the stationary contact away from the moving contact $^3/_4$ of one turn, for a contact gap of .022.

B. Shaft Clearance Adjustment

The upper bearing screw should be screwed down until there is approximately .025" clearance between it and the top of the shaft bearing. The upper pin, bearing should then be securely

locked in position with the lock nut.

C. Spring Restraint Adjustment

Adjust R_{M2} resistor ($3^1/_2$ inch resistor located on the right-hand side bottom) to measure 577 ohms. Set $T_L = T_O = .2$, $M_C = 9.0$, $M_F = 1.0$. Adjust voltage to measure 2.4 volts and adjust phase shifter for current lagging the voltage by 90°. Adjust the restraint spring so that the current required for contacts to just close is equal to 7 amperes. Deenergize relay completely — the moving contact should return to its original position against the metal stop on the right-hand side of the bridge.

D. Core Adjustment

Apply 100 Vac to terminals 19 and 20. Relay contacts should stay open. If the contacts are closed, rotate core by a non-magnetic tool being inserted into sides of core adjusters located on bottom side of the cylinder unit.

NOTE: The red dot on the core must be to the rear.

Magnetic Plug Adjustment

1. Short out voltage terminals 19 and 20.
2. Jumper terminals 15 and 16.
3. Connect both T_L links to a common tap insert. This will exclude the current from compensator winding.
4. Repeat step 3 for T_O links.
5. Screw in both magnetic plugs as far as possible prior to starting the adjustment.
6. Apply 5 amps and increase gradually to 80 amps of current in terminal 17 out terminal 14. Readjust plug if necessary to keep contacts open. The reactance unit need not be cooled during the rough adjustment but the unit should not be hot when final adjustment is made. Recheck core adjustment using 70 volts as the test level.
7. When relay contacts close to the left screw out the right-hand plug until spurious torque is reversed and screw the right-hand plug out (approximately five turns).
8. When spurious torque is in contact opening direction (to the right), then left-hand plug should be screwed out until the spurious torque is in contact closing direction. Then screw in the left-hand plug until spurious torque is reversed and screw the right-hand plug out five turns.

E. Phase Angle Adjustment for Zone 1 and 2

Set T_L and T_O links for .3 setting each. Connect relay per Figure 15 (page 18) with test reactance measuring approximately 1.0 ohm and an adjustable resistor of 10 ohms (1000 watts). There is no need for exact reactance, since reach of the unit is determined by a factory-adjusted compensator. Connect conventional test probe leads to Z_1 leads for convenience. Close switch 1 shorting out the resistor. Adjust current for 9 amperes current in the circuit. Apply Z_1 leads to different M_F and M_C taps. Note M_C and M_F taps at which reactance unit just closes and opens. If 1 ohm reactor is used, this should occur at approximately $M_C + M_F = 6.0$.

If some other reactor value is used, approximate values are found by using equation

$$M_C + M_F = \frac{10(T_O + T_L)}{X \text{ test}}$$

where X = the available reactor value. Here again relay reach is doubled, since the same test current is passed through the line and residual current circuits. Open the switch and set test resistor for 7 ohms. Adjust current for 10 amperes. Check again MF and M_C taps at which reactance unit just closes and opens. Note the taps – they should be the same as for reactor only value within one M_F tap. If the new taps at which the reactance unit closes is higher than the "reactor only value" increase slightly the R_{M2} resistance; if it is lower, then decrease slightly R_{M2} resistance.

Continue to adjust R_{M2} until the M_C, M_F taps are the same as for "reactor only" – part of test. If difference in taps is too large, recheck taps with "reactor only" and use new taps value as check. Reduce the test resistor to about a half of the pervious setting (3-4 ohms). Readjust current for 10 amps. Check M_C and M_F taps again. The reactance unit should close and open again within one M_F tap. If difference in M_F tap is larger than specified, readjust R_{M2} resistor until all three tests (with "reactor only", with 7 ohms resistor and 3 ohms resistor) will close and open at the same M_C and M_F taps (within one M_F tap). Energize T2X and T3X-telephone relays with the rated voltage, across terminals 5 and 6 and 5 and 4.

Zone 3 – Phase Angle Adjustment

Set $T_L = T_O = .8$ ohms. Use test reactor that has approximate reactance of 5 ohms and test resistor equal to 24 ohms (250 watts). Set R_{M3} resistor located on the bottom left-hand side, to measure, 1020 ohms. Follow the same procedure as described under Phase Angle Adjustment for zone 1 and 2, except adjust current for 3.0 amperes and use first 24 and then 12 ohms resistance in series with reactor. The approximate tap value is computed as follows:

$$M_C + M_F = \frac{25(T_O + T_L)}{X \text{ test}}$$

9.3. Compensator Check

Accuracy of the mutual impedance T of the compensator is set within very close tolerances at the factory and should not change under normal conditions. The mutual impedance of the compensators can be checked with accurate instruments of the high input impedance type by the procedure outlined below:

1. Set $T_O = T_L = 1.1$
2. Disconnect Z_1 and $2.5Z_3$ leads from M_C and M_F taps.
3. Pass 10 amp ac current in terminal 14 out terminal 17 (with 15 and 16 jumpered together).
4. Measure voltage across Z_1 leads. It should measure 22 volts (±3%).
5. For Z_3 compensator check operate telephone relays T_{2X} and T_{3X}. The voltage across $2.5Z_3$ leads should be equal to 55 volts (±3%).

9.4. Ratio Discriminator Transformer Check

With relay connected per Figure 13 (page 14) measure current in the polar element by inserting a dc milliampere in series with polar unit coil.

With 1 amp passed through the relay the dc current through the polar element should measure .70 milliamperes (±10%).

9.5. Ratio Discriminator Calibration

1. For best results, the calibration should be done with relay in the case. Adjust the contact screws to obtain a .050" contact gap such that the armature motion between the left- and right-hand contacts is in the central part of the air gap between the pole faces. Tighten the contact locking nuts. Approximate adjustment of the two magnetic shunt screws is as follows:

   Screw both shunt screws all the way in. Then back out both screws six turns, pass 1 ampere at rated frequency in terminal 17 out terminal 16. Screw in the right-hand shunt until the armature moves to the left. If the armature moves to the left as less than 1 ampere. Screw out the fight-hand shunt until proper armature action is obtained.

   Reduce the current until the armature resets to the right. This should happen at .4-.5 amperes. If armature resets at less than this value, it will be necessary to advance the left-hand shunt to obtain the desired dropout.

   This in turn will require a slight readjustment of the right-hand shunt. Recheck the pickup and dropout points several times, and make any minor "trimming" adjustments of the shunt screws that may be necessary to obtain correct calibration. If the above procedure does not give sufficiently high dropout, a small amount of further adjustment can be obtained by advancing the left-hand contact screw a fraction of a turn. As finally adjusted, the contact gap should be at least .45" and the action of the armature should be snappy at the pickup and dropout points.

   Just above the pickup current, there may be a slight amount of contact vibration. Make a final adjustment of the two left-handed contact screws to obtain equal vibration of both contacts as indicated by a neon lamp connected in the contact circuit.

   Pass 50 amperes ac for a short moment through the relay, recheck pickup. Readjust shunts if there is a change in pickup. Apply 50 amperes again. Recheck pickup and dropout several times until there is no change in pickup and dropout before and after 50 amps are applied.

2. Remove 1080 ohm resistor. Apply 225 Vdc across terminals (12 and 11) and (13 and 11) with plus polarity on terminals 12 and 13. Measure current in series with terminal 11 and a 10,000 ohm resistor. It should be below 0.5 milliampere. Reverse polarity and apply 125 Vdc. The current should be approximately 9 milliamperes.
3. Apply 25 volts dc from terminal 11 to terminal 18, with positive polarity on terminal 11. The current should read approximately 12 mA. Reverse the polarity and apply 10 Vdc the current should read approximately 10 mA.
4. Apply about 3 amps of ac current to terminals 17 and 16. Measure dc voltage from left-hand polar

unit terminal to the terminal 18, and from terminal 13 to the terminal 18. Ratio between this voltage and the first voltage should be .65- .80.

9.6. Operation Indicator Test

Block X and RD — contacts closed, and pass sufficient dc current through trip circuit to drop the target.

Target must not operate at less than 0.9 amps dc, or more than 1.2 amps suddenly applied. To increase the operational current, bend the springs out, or away from the cover. To decrease the operational current, bend the springs in, toward the cover.

Observe the target operation several times.

9.7. Energy Requirements

9.7.1. Voltage Burden

Maximum voltage burden for $M_C + M_F = 10.0$ settings is 8.7 volt-amperes at unity power factor.

The burden at some other setting is equal to:

$$8.7\frac{(M_C + M_F)^2}{10}$$

volt-amperes at unity power factor.

9.7.2. Current Burden

Table 3:
Line Current Circuit (I ph) - at 5 amp:

TAP SETTING - T_L	VOLT-AMPERES	DEGREES VOLTAGE LEADING
.2	3.95	53
.3	4.00	53
.5	4.13	53
.8	4.73	53
1.1	5.00	53
Residual Current Circuit (KI_O) at 5 amp:		
TAP SETTING - T_O	VOLT-AMPERES	DEGREES VOLTAGE LEADING
.2	1.29	9
.3	1.30	11
.5	1.48	13
.8	1.95	23
1.1	2.14	28

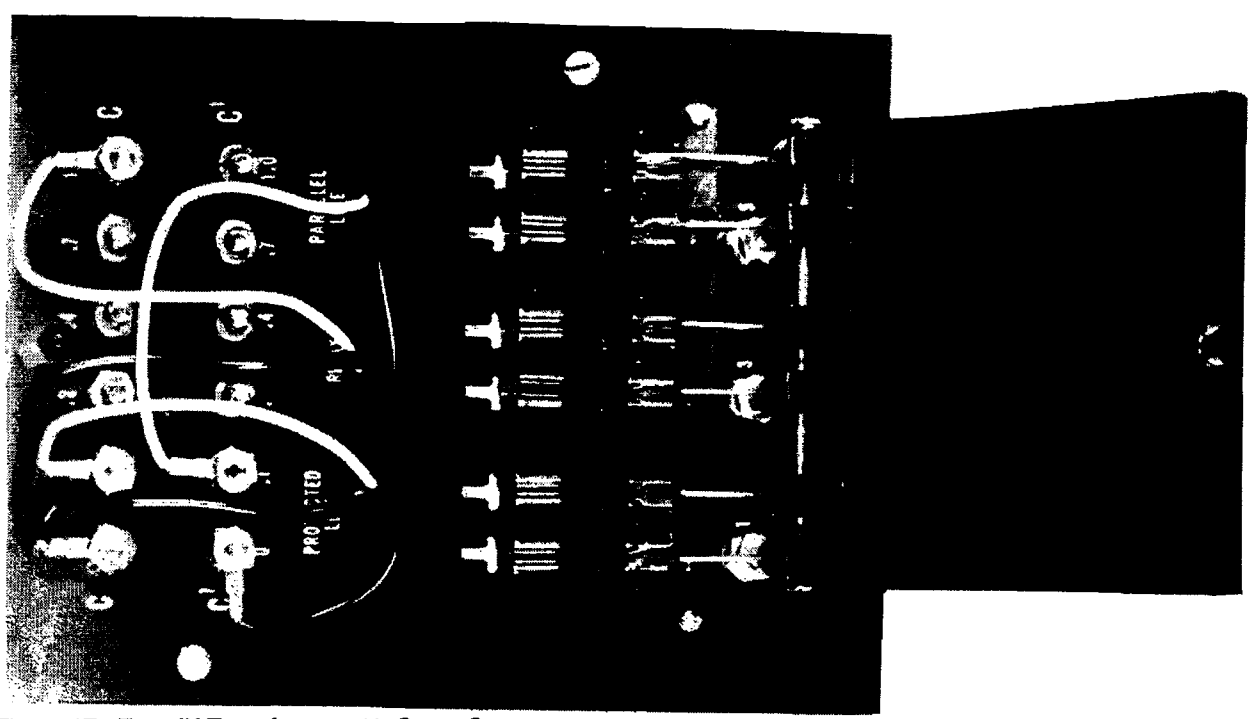

Figure 17. Type IK Transformer with Cover Open

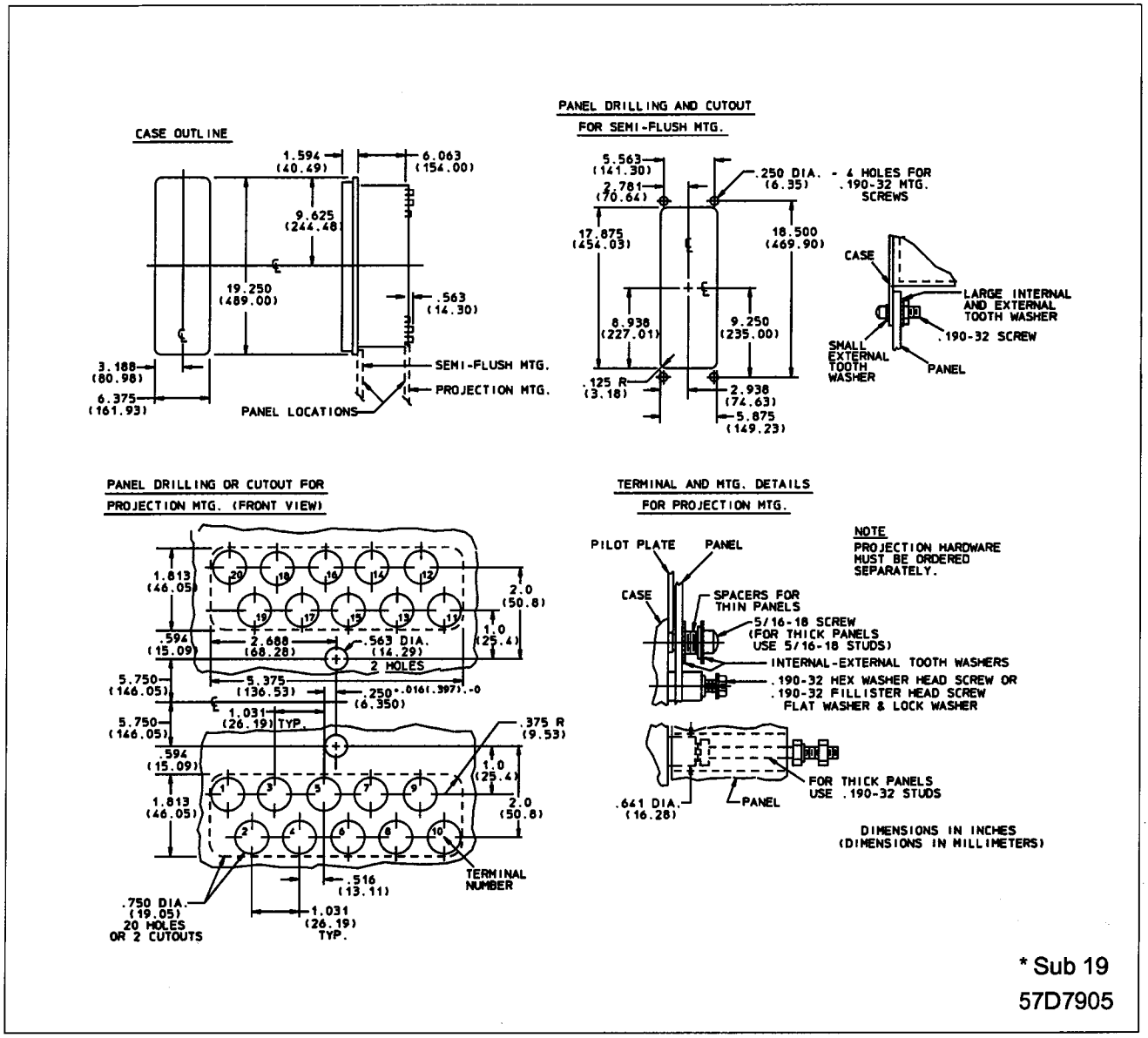

Figure 18. Outline – Drilling Plan for Type KDXG – Relay in FT-42 Case

** Denotes change*

ABB Inc.

4300 Coral Ridge Drive
Coral Springs, Florida 33065

Telephone: +1 954-752-6700
Fax: +1 954-345-5329

www.abb.com/substation automation