DOOR ENTRY SYSTEM

System Manual

ABB-Welcome

ABB-Welcome
Leading to a flexible and simple world

The new ABB-Welcome door entry system offers more flexible applications because of its 2-wire technology. Because of the simple 2-wire bus and modular design of the outdoors stations, installers can choose from a variety of applications: single-family homes, multi-family buildings, and residential complexes; suitable in renovation or new construction.

ABB-Welcome
More flexibility and simplicity

Thanks to the modular design and extremely versatile 2-wire bus system, the ABB-Welcome is designed with the concept of flexibility, simplicity and elegance. Therefore, installation and usage is much easier. With this wide range of well-designed products, ABB-Welcome meets all your needs in a door entry system.

01

02

03

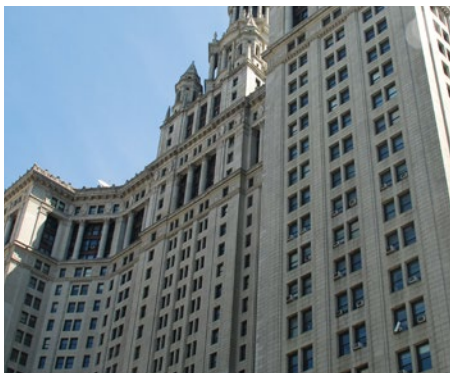

04

05

01 One-family house
02 Multi-family house
03 Apartment building
04 High rise building
05 Residential Complex

06

07

08

09

10

11

12

13

14

15

16

17

18

06 Mini video outdoor station, aluminum
07 Video pushbutton outdoor station, white
08 Video pushbutton outdoor station, aluminum
09 Video pushbutton outdoor station, stainless steel
10 Video keypad outdoor station, white
11 Video keypad outdoor station, aluminum
12 Video keypad outdoor station, stainless steel
13 Basic 4.3" video hands-free indoor station, white
14 4.3" video hands-free indoor station, white
15 4.3" video handset indoor station, white
16 7" video hands-free indoor station, white
17 Audio handset indoor station, white
18 Audio hands-free indoor station, white

Contents

Terminology	08/156
01 Examples of typical system	12/156
02 Planning	22/156
03 Installation	92/156
04 Commissioning	104/156
05 Operation	118/156
06 Overview of product range	120/156
07 Connection	138/156
08 Technical assistant tool	152/156
Legend	154/156

Terminology

In order to logically and easily understand ABB-Welcome system for installation, terminologies are defined below with illustrations. We strongly recommend you read this section first before proceeding to other chapters.

Insulated system Fig. 0-1

The insulated system is a system in which all devices are managed by one system controller and isolated by a gateway if networked. The operation within an insulated system will work independently and not interrupt other insulated systems. This is an important concept; both power consumption and distance calculation are made based on the insulated system.

Common part

The common part is the bus of the networked system — the insulated system where gate station, gateway (only the part out of building) and other related system devices are installed.

System C is a typical networked system where the system controller manages the gate station, guard unit and gateways. Fig. 0-1

Building part

The building part is the bus of the individual building system - the insulated system where the outdoor station and indoor stations and other related system devices are installed.

System A and B are typical building systems where the system controller manages the outdoor station, gateway, video indoor distributor, and audio/video indoor stations. Fig. 0-1

Looping connection

Looping connection is a connection layout of devices. With the looping connection, the same type of devices are connected one after another. The device can be an indoor station, video distributor or gateway.

System A shows the looping connection of audio indoor stations in one building, and System C shows the looping connection of gateway (the ones inside the building) in a networked system. Fig. 0-1

Branch connection

Branch connection is a connection layout of devices. With the branch connection, the same type of devices are not connected with each other like looping connection, sometimes an additional device, such as a video distributor is needed. Usually, the branch connection of indoor stations or gateways coexists with looping connection of video distributor.

System B is a typical branch connection where the indoor stations are connected by branch and video distributors are needed with looping connecting. Fig. 0-1

Internal bus Fig. 0-2

The system controller supplies the other bus subscribers with voltage and controls communication on the 2-wire bus. Starting from the system controller, the 2-wire bus is divided into 2 parts - the internal bus and the external bus.

The internal bus is the bus for controlling indoor stations or sub-insulated system devices. In the building system, it refers to the bus line from system controller to the last indoor station. In the networked system, it refers to the bus line from system controller to the last gateway.

External bus Fig. 0-2

The external bus is the bus for controlling outdoor stations in the same insulated system and other related system devices. In the building trunk system, it refers to the bus line from system controller to outdoor station. In the networked system, it refers to the bus line from system controller to the gate station.

Fig. 0-1

A,B and C are 3 insulated systems

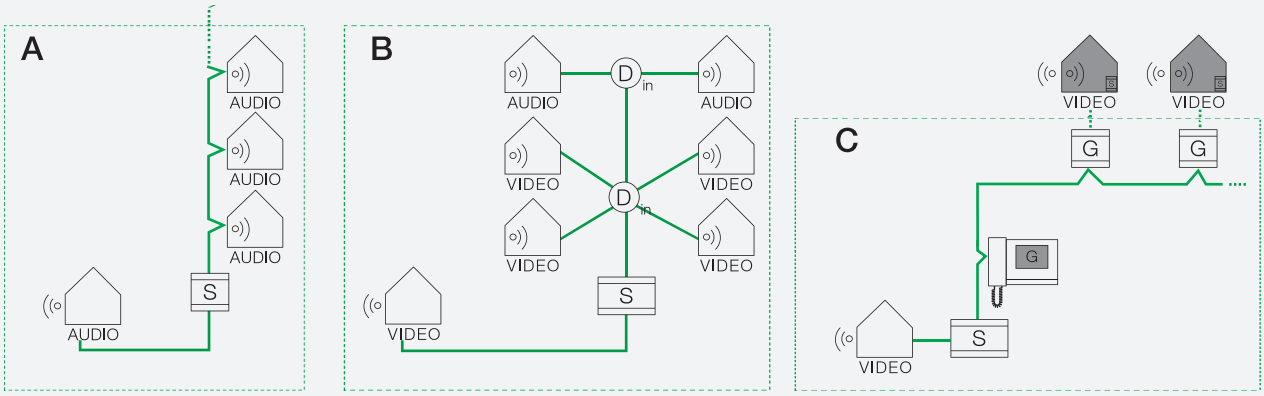

Fig. 0-2

Internal bus and external bus in building system

In. — Internal bus
Ex. — External bus

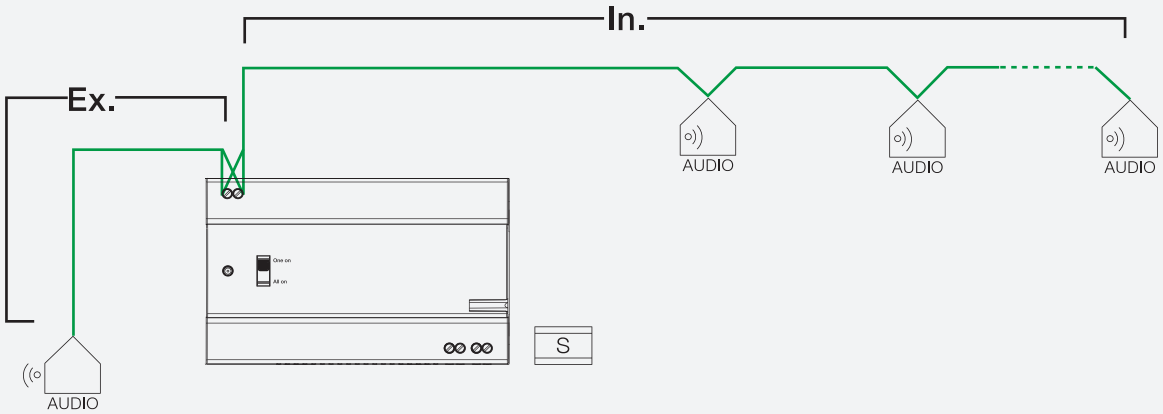

Internal bus and external bus in networked system

In. — Internal bus
Ex. — External bus

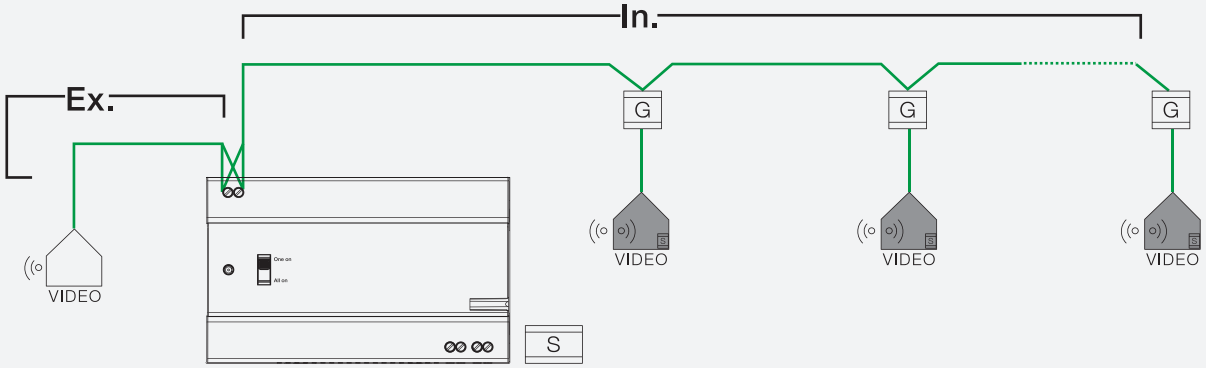

Note: Graphic symbols are explained in the legend on page 147

Apartment system

Multi-insulated systems use multi-system controllers. When an insulated system is used for an apartment, it is called apartment system. Fig. 0-3

A group of villas/single-families linking into a networked system can also be taken as one form of apartment system. Fig. 0-4

For an apartment system, you can set address for apartment gateway instead of setting address for indoor stations in the apartment.

Floor system

When an insulated system is used for a building floor with several apartments on the same floor, it is called floor system. Fig. 0-5

A group of multi-family buildings linking into a networked system can also be taken as one form of a floor system. Fig. 0-6

The address of a floor gateway should be set the same to the address of the first indoor station installed on this floor.

Building system

When an insulated system is used for a building, it is called building system. For a high-rise building with more than 250 apartments, which can be divided into sever parts and uses the same gate station, it is also taken as one form of building system. Fig. 0-7

The gateway address is set consecutively, one upon another.

Audio system

For an insulated system with pure audio signal transmitted on the bus line, it is called audio system.

The left of Fig. 0-6 is an example for audio system.

There are no video devices in audio system.

Video system

For an insulated system with video signal or mixed audio and video signal transmitted on the bus line, it is called video system.

The right of Fig. 0-6 is an example for video system.

There is at least one video device in video system.

Outdoor stations

Outdoor station is a general name. When it is installed at different place, it can be called different name.

It is called apartment/villa outdoor station when it is installed at the entrance of an apartment or a villa.

It is called floor outdoor station when it is installed at a floor entrance.

It is called building outdoor station when it is installed at the entrance of a building.

It is called gate station when it is installed at the entrance of the residential complexes.

Parallel outdoor stations

With one system controller, when several outdoor stations are connected (with different addresses set), it is called parallel outdoor stations.

Parallel indoor stations

For apartment system, parallel indoor stations means the indoor stations to be set the same address or different address.

For other system, parallel indoor stations means the indoor stations to be set the same address.

Fig. 0-3

Apartment system for apartments

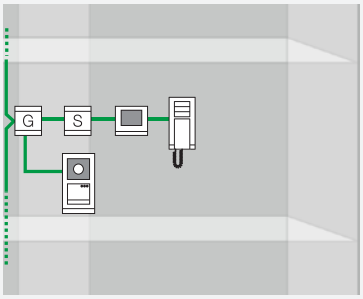

Fig. 0-4

Apartment system for a group of villas

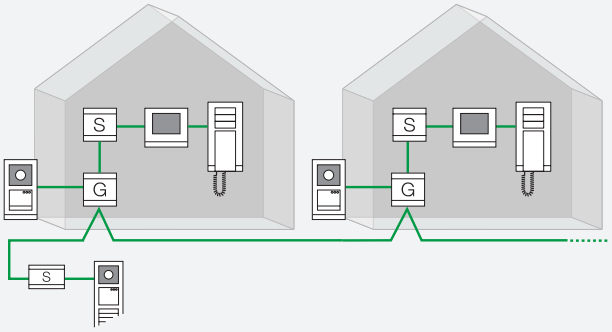

Fig. 0-5

Floor system for apartments in a floor

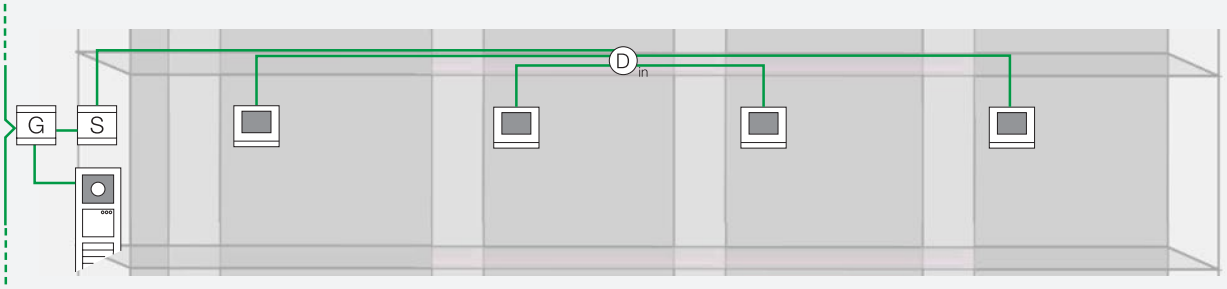

Fig. 0-6

Floor system for a group of multi-family buildings

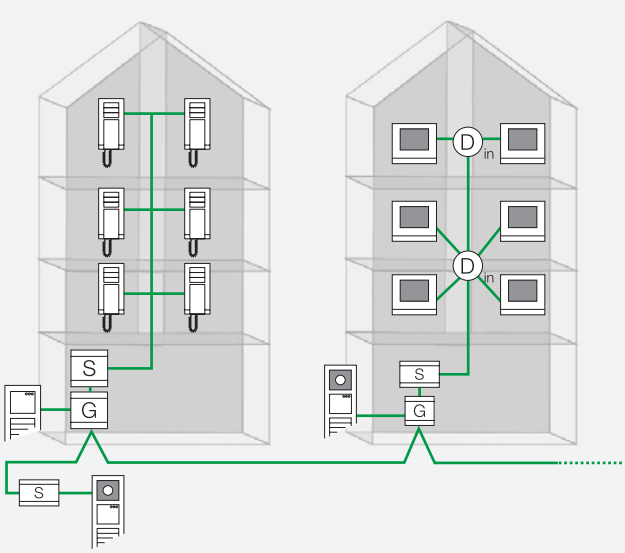

Fig. 0-7

Building system for building with more than 250 apartments

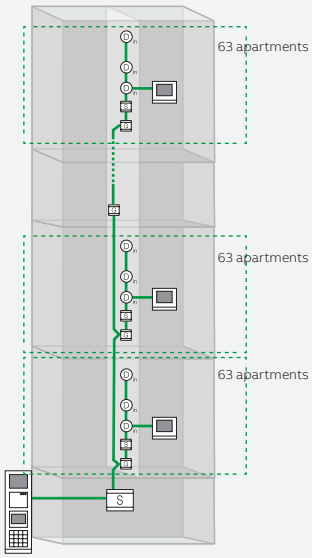

01
Examples of typical system

ABB-Welcome meets your door entry needs in a variety of contexts, both in new construction or renovation of older buildings. Whether in single or multi-family houses, or high-rise buildings with more than 250 apartments, ABB-Welcome is the answer.

Single-family house, audio/video Fig. 1-1

ABB-Welcome system consists at minimum of a system controller, outdoor station and indoor station. In Fig. 1-1 three indoor stations are installed in one house. When a visitor rings the bell at the video outdoor station, the call can be answered at either the 4.3" video hands-free indoor station, the 4.3" handset video indoor station or the audio indoor station.

Multi-family building, audio Fig. 1-2

Retrofitting an ABB-Welcome system in a multi-family house with existing wiring is very easy. Even a plain bell system can be converted to an audio or a video system. Depending on the loca circumstances, an installation with recourse to a rising mains,as shown in Fig. 1-2, is recommended. The wires branch offon each floor where the existing apartments are located - to where an audio indoor station with handset is mounted. There the user can answer incoming calls, open the pedestrian door and the garage door. Doorbell buttons may also be used; these are connected to the indoor station.

Fig. 1-1

Single-family house, audio/video

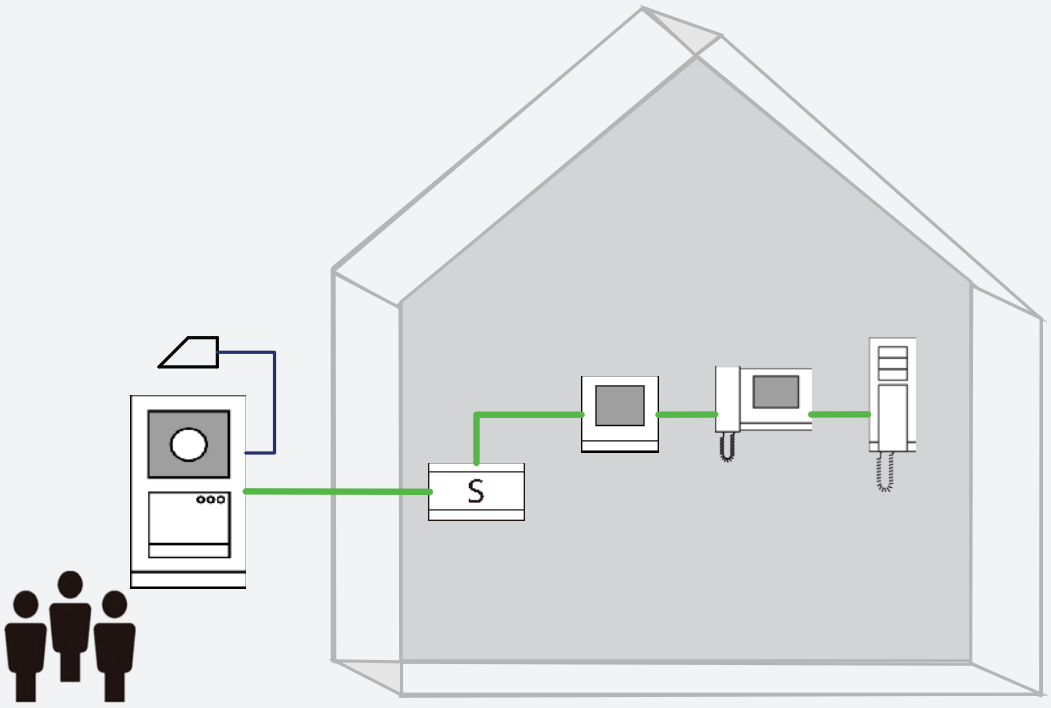

Fig. 1-2

Multi-family building, audio

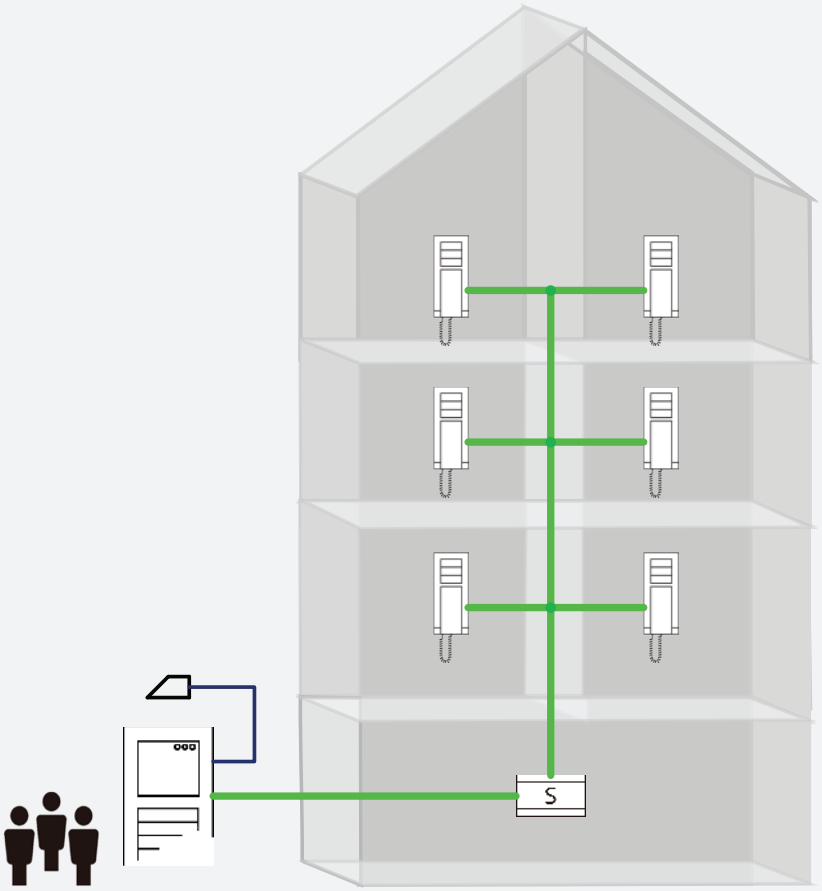

High-rise building, audio/video Fig. 1-3

The setup of a video system or a mixed audio and video system can include an existing rising mains. To correctly distribute the video image of the outdoor station inside the house, video distributors are installed in each branch box. When one system controller cannot cover all the power consumption of the devices, additional power supply in the bus should be added by the combination of gateway and system controller.

Group of villas, audio/video Fig. 1-4

For a group of villas/single-family houses, a gate station can be equipped as the main entrance. The gateway installed in each villa/single-family ensures the independent operation of each villa/single-family and links the whole group as a networked system.

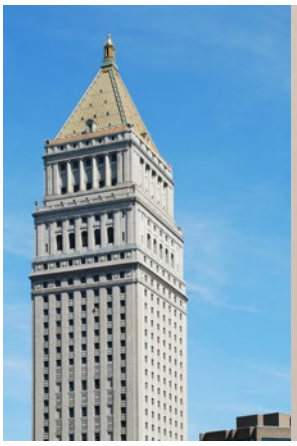

Fig. 1-3

High-rise building, audio/video

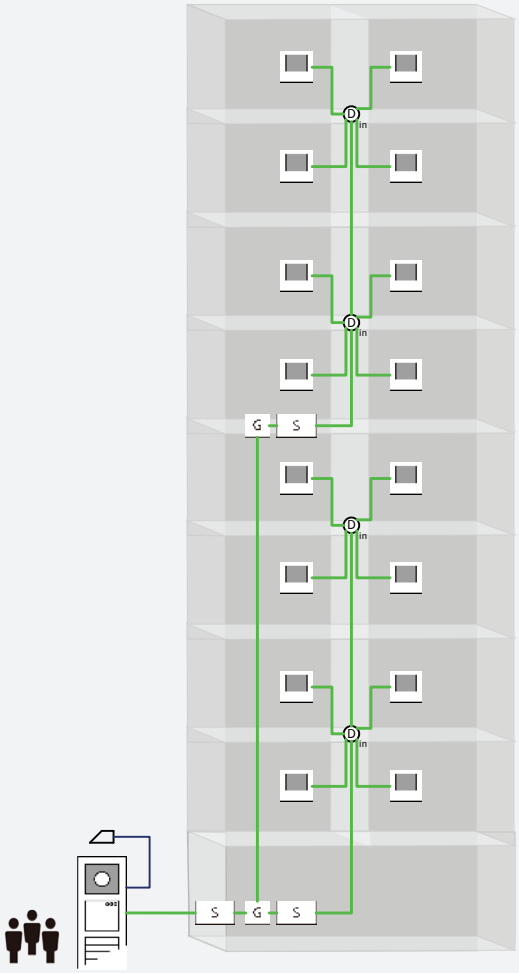

Fig. 1-4

Group of villas, audio/video

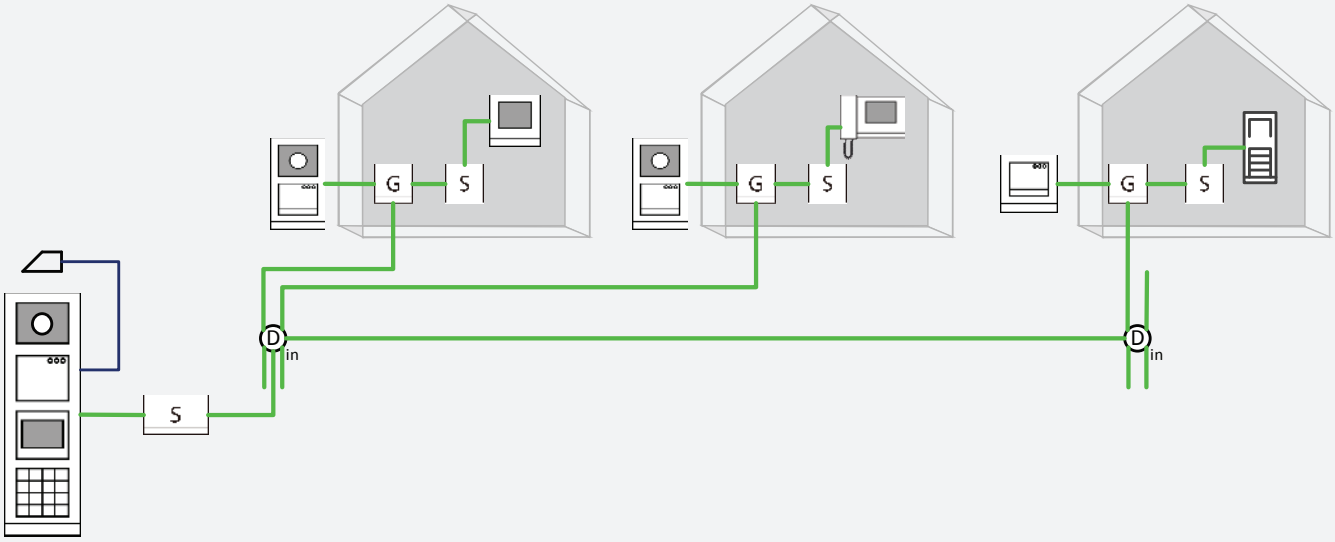

High-rise building with floor entrance, video Fig. 1-5

For a high-rise building, a pushbutton outdoor station is present on each floor as the second entrance to reachthe apartment door. The gateway installed on each floor ensures their independent operation within the building.

Resident complexes, audio/video Fig. 1-6

For residential complexes that may include single family homes, multi-family houses and high-rise buildings, common gate station(s) are present with guard unit(s). The gateway installed in each single family home /high-rise building ensures their independent operation within the building and links the whole group as a networked system.

Fig. 1-5

High-rise building with floor entrance, video

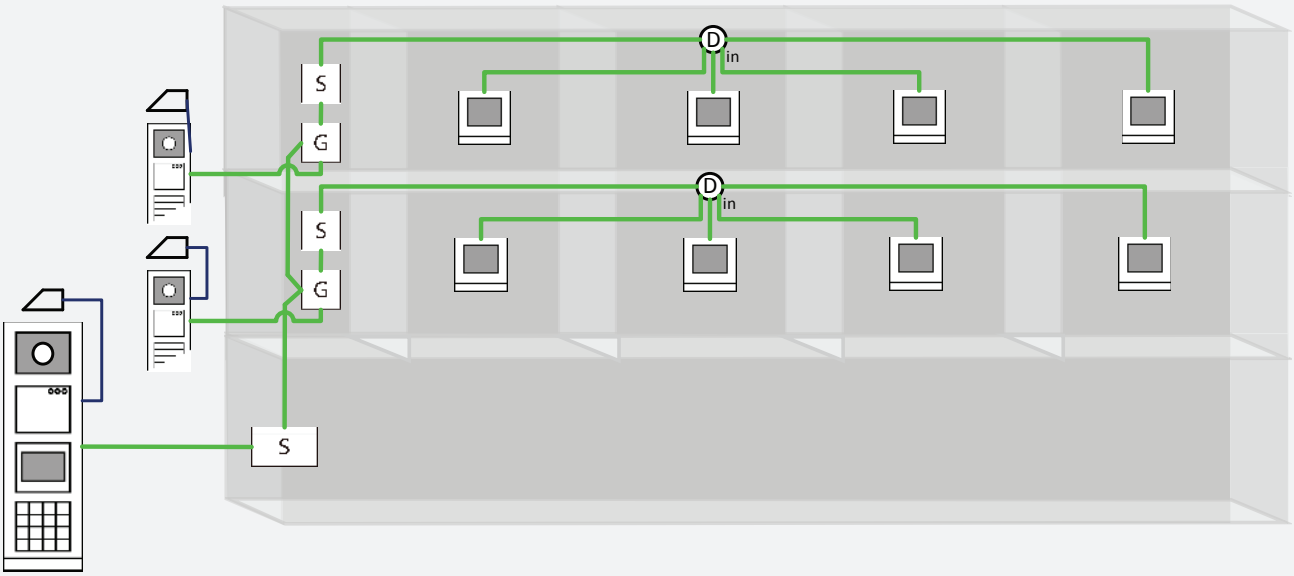

Fig. 1-6

Residential complexes, audio/video

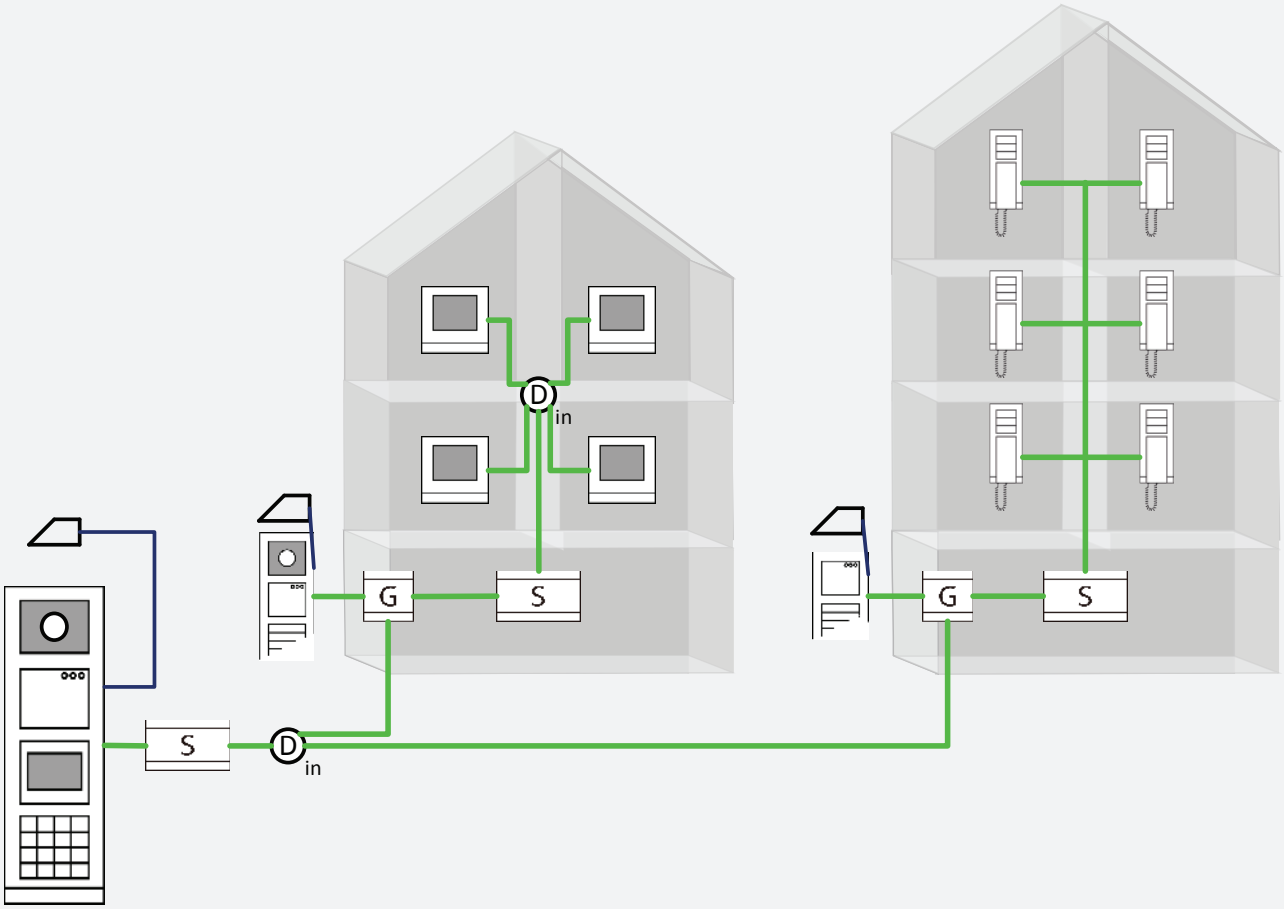

Commercial buildings, audio/video Fig. 1-7

For buildings with several entrances (doctor's office, law firm, small businesses, etc.), these can be individually equipped with outdoor stations. A combination of audio outdoor stations and video outdoor stations is possible. For this application, a video outdoor distributor as MDRC unit must be used. The door, from which the bell is rung, is opened by the indoor station called.

Single family, with multi-camera Fig. 1-8

The solution for single family with multi-camera. The drawing shows 2 extra cameras can be installed at the front door and the back door of the villa through Camera interface.

Each Camera interface can support max. 4 cameras.

The video from the camera interface can be viewed on video indoor station.

Fig. 1-7

Commercial objects, video/audio

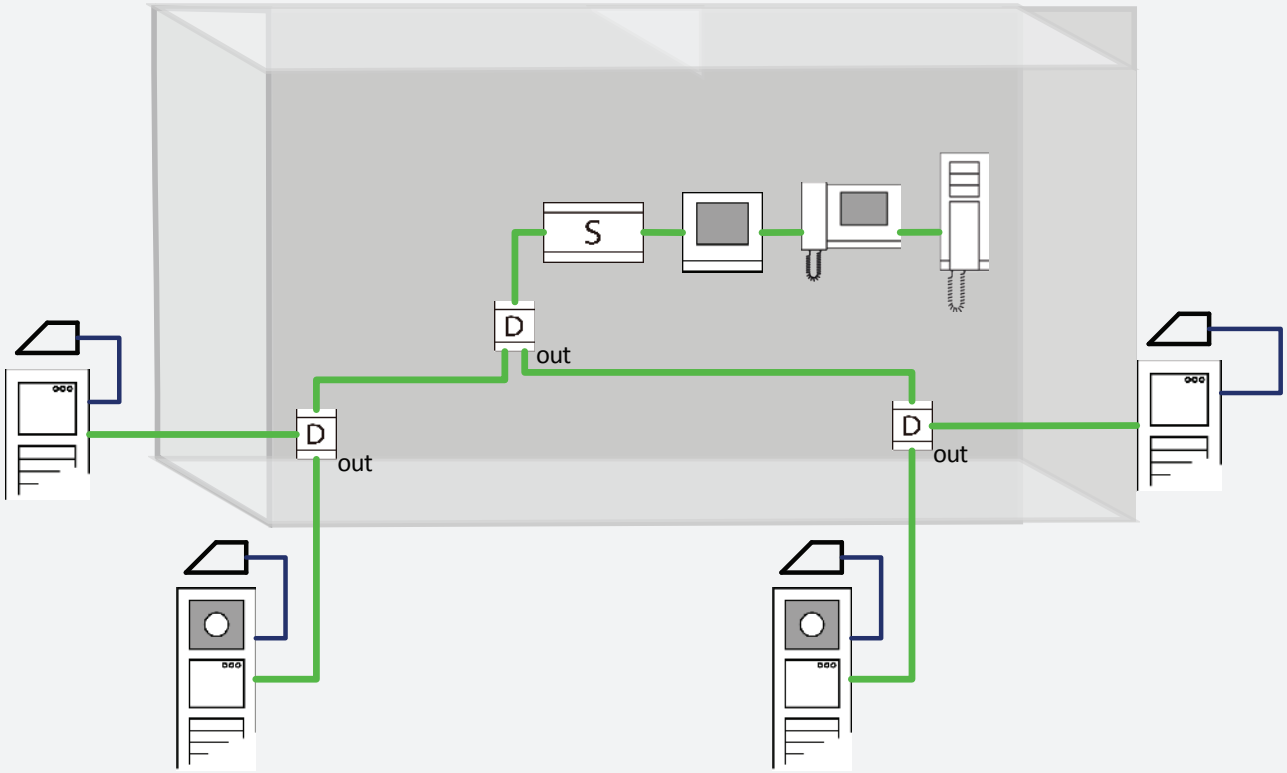

Fig. 1-8

Single family, with multi-camera

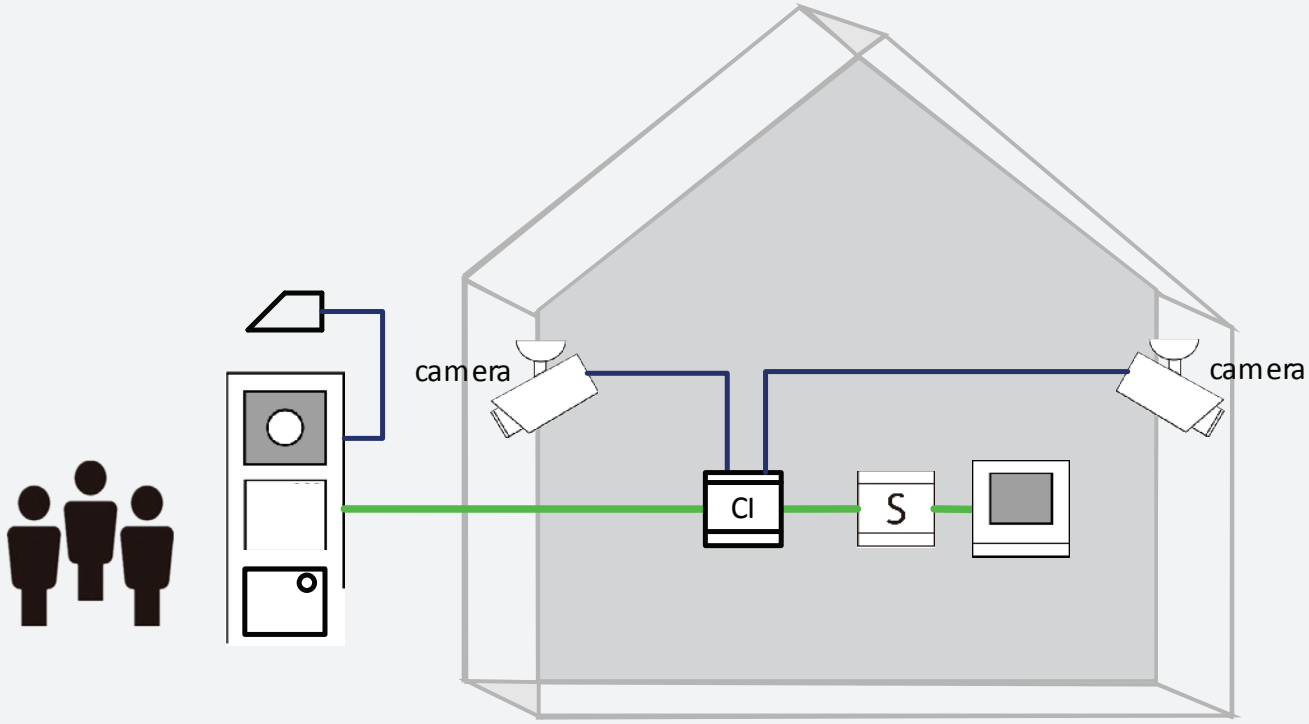

Solution for office buildings using telephones as indoor station Fig. 1-9

The drawing shows that telephones connected to a PBX can be connected to the system through Telephone Gateway. It allows Outdoor Station calls directly to a telephone. After picking up the telephone, the user can communicate with visitors and open the door for them.

Solution for single-family with mobile devices Fig. 1-10

The drawing shows that the system can be extended for use with a mobile device through IP-Gateway. After installing the Welcome® app, the user can identify visitors and open the door for them even when away from home.

Solution for high-rise building with elevator control Fig. 1-11

The drawing shows that the system can be extended to the elevator through M adaptor (M2306) and lift control relay module (M2307). It only allows authorized visitors or residents to go to their designated floors.

Fig. 1-9

Solution for office buildings using telephones as indoor stations

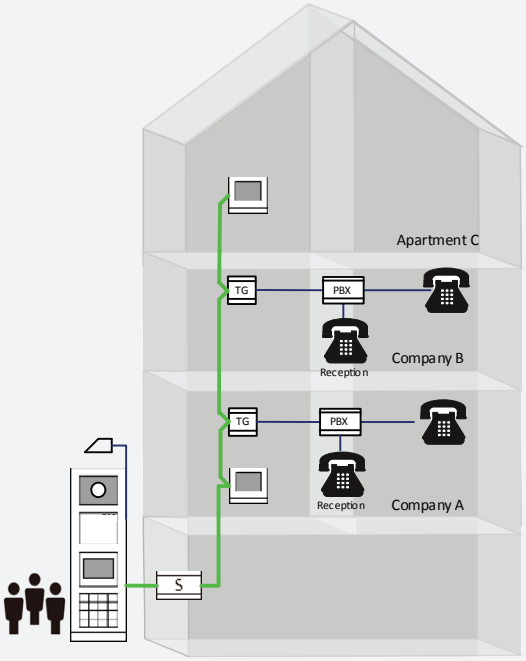

Fig. 1-10

Solution for single-family with mobile devices

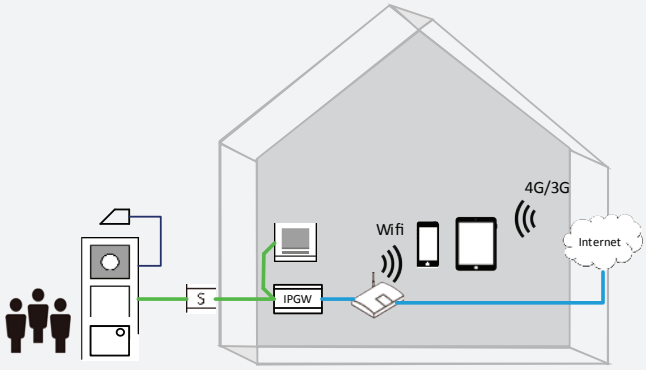

Fig. 1-11

Solution for high-rise building with elevator control

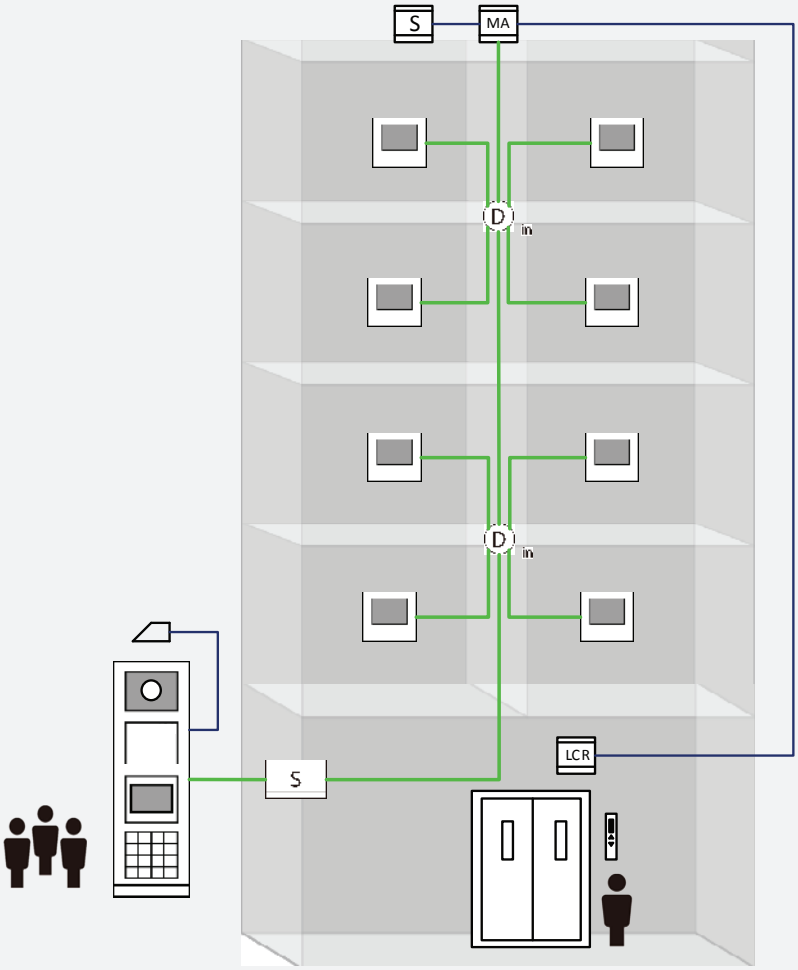

02
Planning

Either by providing an easy-to-understand table to see the combination of possibilities of outdoor stations, indoor stations, and system devices, or by supplying simple rules for flexible topology, power consumption, and distance calculation, these planning steps can make complex projects easier to manage and implement at a later stage.

In most cases, the existing lines can be used. The universally used 2-wire bus technology allows a bell system to be upgraded to a video system with an outdoor camera.

ABB-Welcome system can be set up with one system controller or with multi-system controllers. For both types, every system controller makes an insulated system.

For each insulated system, it can be exclusively an audio system. In the building part, visitors and residents use it to communicate between audio outdoor stations and audio indoor stations. In the common part, if a guard unit is present, the visitor and guard can communicate with each other.

The insulated system can also be a video system.
This makes the camera image of the video outdoor station visible at the video indoor stations in the building part, or image of video gate station visible at the guard units in the common part.

This chapter includes sections below to make the planning job easier:

2.1 Capacity of ABB-Welcome system
2.2 Selection of the outdoor station
2.3 Selection of the indoor station
2.4 Selection of the system devices
2.5 System topology
2.6 Power consumer calculation and distance calculation to an insulated system
2.7 Easy reference for the modular outdoor station solution

2.1 Capacity of ABB-Welcome system

The system capacity is determined by the number of valid addresses for the devices. Two kinds of addressing are used in ABB-Welcome system:
Independent addressing and combined addressing.

» For independent addressing, the devices' addresses are independent in the common part and in the building part.
» For combined addressing, the total address number of the devices in every building and the devices in common part should be less than a certain value.

	OS	IS	Gateway	GU	SA	CI	TG	IPGW	LCR
Total address: (independent addressing)	-	250	60(1) 99(2)	9	-	9(3)	99	250	16(5)
Total address: (combined addressing)	9	-		-	199	9(4)	-	-	-

(**OS**=outdoor station, **IS**=indoor station, **GU**=guard unit, **SA**=switch actuator
CI=camera interface, **TG**=telephone gateway, **IPGW**=IP-Gateway, **LCR**=lift control relay module)

(1) Supports up to 60 gateways in building gateway mode
(2) Supports up to 99 gateways in apartment gateway mode or floor gateway mode
(3) Supports up to 15 cameras - work associated with outdoor station/guard unit
Supports up to 36 cameras - work associated with indoor station
(4) Supports up to 36 cameras - work as independent outdoor station
(5) One M adaptor (M2306) can support 2 groups of relay modules (that means support 2 lifts).
Inside each lift, one M adaptor can support 16 relay modules. As each relay module has 16 relay outputs, it can support up to 256 floors (16 relay modules *16 relay outputs).

* Total address of independent addressing = Common part or every individual building part, two parts are independent
Total address of combine addressing = Common part + every individual building part, two parts are combined

Outdoor station

The outdoor station of ABB-Welcome system includes the building outdoor station, single family home outdoor station, gate station, and second confirmed outdoor station. The total address number of outdoor stations is 9 for all kinds of entry level.
The following are some examples of the address of outdoor stations:

» In one video system with only one building/single family home, 9 outdoor stations can be installed.
» In a networked system, 4 gate stations in the common part, and each building has 4 building outdoor stations and one second confirmed outdoor station in each of the apartment, total 9 (4+4+1) outdoor stations can be installed for the apartment. Fig. 02-1 (B4)

Or, 5 building outdoor stations for one single family home and 4 gate stations in the common part, total 9 (5+4) outdoor stations can be installed for the apartment.
Fig. 02-1 (B54)

Indoor station

In a single building or in the building part of a networked system, the total number of indoor station addresses is 250.

» In one audio/video system for one building with up to 250 apartments.
» In one networked system, with each building up to 250 apartments Fig. 02-1 (B1)

Gateway

The gateway uses independent addressing. The total number of gateway addresses varies when it is set as different modes for application.

The total address number of gateways when set as apartment gateway or floor gateway is 99. The available number of gateway addresses set as building gateway is 60. Please refer to pages 44-48 for gateway settings for application.

Guard unit

The address of the guard unit uses independent addressing. A total of 9 guard units is allowed in a video system of one building or in the building part of networked system. In one networked system, a total up to 9 guard units is allowed in the common part.

Switch actuator

The address of the switch actuator uses combined addressing. Up to 199 switch actuators can be connected.
For example:

» In a system with one building with 199 apartments, each apartment can install one switch actuator.
» In a networked system, 4 switch actuators can be installed in the common part, and 195 switch actuators can be installed in every building.

Fig. 02-1

Capacity of ABB-Welcome system

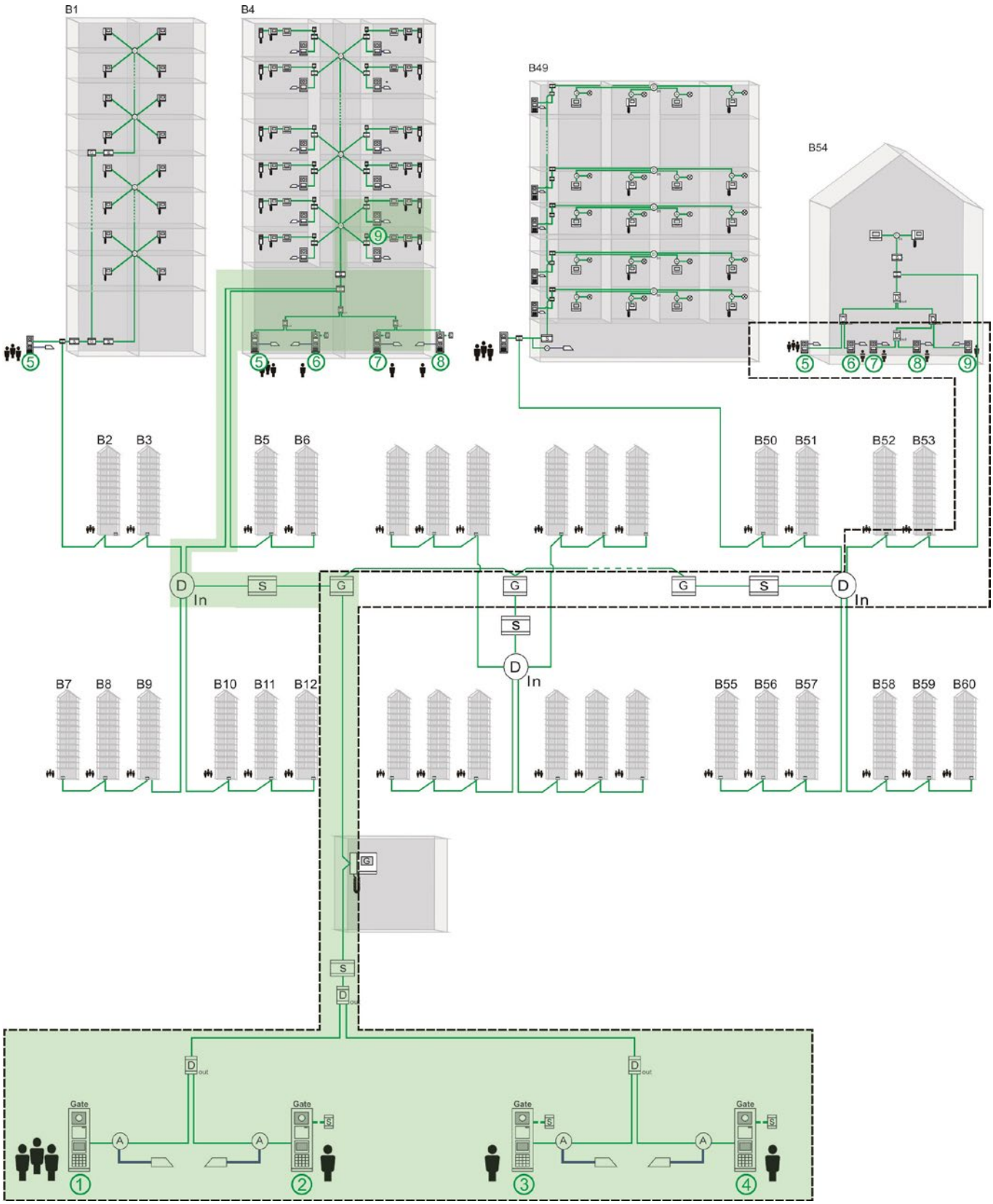

Camera interface

A total of 9 camera interfaces can be used. Each camera interface is set unique address and supports 4 analog cameras. The total number of cameras varies when it works in different working mode.
The following are details of the capacity of cameras:

» Camera interface programmed to work as an independent outdoor station, using combined addressing. A total of 9 camera interfaces in one system. Same addressing rule as outdoor station.
» Camera interface programmed to work associated with outdoor station/guard unit, using independent addressing. A total of 9 camera interfaces, max.15 cameras can be associated with each outdoor station, including the built-in cameras in outdoor station.
» Camera interface programmed to work associated with indoor station , using independent addressing. A total of 9 camera interfaces, 36 cameras can be associated with each video indoor station.

Telephone Gateway

The address of telephone gateway uses independent addressing. A total of 99 telephone gateways are allowed in one building or in the building part of networked system. For each telephone gateway, up to 250 indoor stations can be added in its phone book. All these are configured via telephone or by Internet browser through IP-Gateway.

IP-Gateway

The address of IP-Gateway uses independent addressing. A total of 250 IP-Gateways are allowed in one building or in the building part of networked system. Each IP-Gateway supports up to 4 devices, e.g. smart phones, tablets or ComfortTouch. If there are more than 4 devices, additional IP-Gateways with the same account are needed

Lift control

One M2307 (lift control relay module) supports 16 floors.
One M2306 (M adaptor) supports 2 lifts, each lift associates with 16 M2307, so MAX 256 floors.

2.2 Selection of outdoor station

Mono-bloc outdoor station Fig. 02-2

ABB-Welcome provides a wide range of outdoor stations to meet diverse requirements.

Composition of pushbutton outdoor station Fig. 02-3

There are two types of pushbutton, one is row pushbutton, the other is round pushbutton.

Row pushbutton includes 3-row and 4-row. Both can be set as one column or dual columns to multiples the application, it is also called “single column” and “double column”.

Round pushbutton includes 1 round pushbutton, 2 round pushbuttons and 3 round pushbuttons.

Row pushbutton module and round pushbutton module can be used both for aluminum outdoor station and stainless steels outdoor station.

Audio module is compulsory for any pushbutton outdoor station. It includes 3 types: no pushbutton, 1-row pushbutton and 2-row pushbutton.

For pushbutton outdoor station, there are two types of cover frames for choosing: aluminum frames and stainless steel frames. And they shares flush-mounting boxes when flush mounted installation and rain hood when surface mounted installation.

Fig. 02-2

Mono-bloc outdoor station

Aluminum mono-bloc outdoor station

Stainless steel mono-bloc outdoor station

Fig. 02-3

Composition of aluminum pushbutton outdoor station

	Camera module (only for video outdoor station)	Function module (for both audio and video outdoor station)	Shared panel and flush-mounted box	Examples of combination flush-mounted	Shared rainy hood
Bar pushbutton outdoor station					
Round pushbutton outdoor station		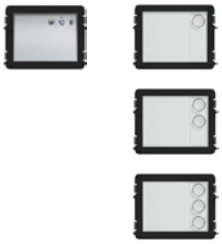			

Composition of stainless steel pushbutton outdoor station

	Semi-assembled panel	Function module (for both audio and video outdoor station)	Shared panel and flush-mounted box	Examples of combination flush-mounted	Shared rainy hood
Bar pushbutton outdoor station					
Round pushbutton outdoor station					

Audio outdoor station with round pushbuttons

Button range	Article No.													
	Audio Module	Round pushbutton module and nameplate module												
	M251021A-x	51011P1	51011P2	51011P3	Additional 51011P3	Additional 51021DN	51022CF-x + 41022F	51023CF-x + 41023F	51024CF-x + 41024F	51028CF-x + 41028F	51025CF-x + 41025F	51026CF-x + 41026F	51029CF-x + 41029F	51024CF-x + 41024F + 51021J
	x1	x1	x1	x1										
1-3		1	2	3										
4-6		4	5	6	x1									
7-9		7	8	9	x2									
10-12		10	11	12	x3									
13-15		13	14	15	x4									
16-18		16	17	18	x5	x1								
19-21		19	20	21	x6									
22-24		22	23	24	x7	x1								
25-27		25	26	27	x8									
28-30		28	29	30	x9	x1								
31-33		31	32	33	x10									
*Optional to install rain hood							51022RH	51023RH	51024RH	51028RH	51025RH	51026RH	51029RH	51027RH

Video outdoor station with round pushbuttons

Button range	Article No.													
		Audio Module	Round pushbutton module and nameplate module											
	M251021C	M251021A-x	51011P1	51011P2	51011P3	Additional 51011P3	Additional 51021DN	51023CF-x + 41023F	51024CF-x + 41024F	51028CF-x + 41028F	51025CF-x + 41025F	51026CF-x + 41026F	51029CF-x + 41029F	51024CF-x + 41024F + 51021J
	x1	x1	x1	x1	x1									
1-3			1	2	3	-								
4-6			4	5	6	x1								
7-9			7	8	9	x2								
10-12			10	11	12	x3								
13-15			13	14	15	x4	x1							
16-18			16	17	18	x5								
19-21			19	20	21	x6	x1							
22-24			22	23	24	x7								
25-27			25	26	27	x8	x1							
28-30			28	29	30	x9								
*Optional to install rain hood								51023RH	51024RH	51028RH	51025RH	51026RH	51029RH	51027RH

Audio outdoor station with bar pushbuttons

3-row pushbutton

Button range		Article No.																
		Audio module						Pushbutton module & nameplate module		Cover frame and flush-mounted box								
Single row*	Double row*	M251021A-x		M251022A-x		M251023A-x		M251021P3	Additional 51021DN	51021CF-x + 41021F	51022CF-x + 41022F	51023CF-x + 41023F	51024CF-x + 41024F	51028CF-x + 41028F	51025CF-x + 41025F	51026CF-x + 41026F	51029CF-x + 41029F	51024CF-x + 41024F + 51021J
		x1		x1		x1												
		Single	Double	Single	Double	Single	Double											
1-2	1-4			1	1-2	1	2-4	-										
3-5	5-10	3	5-6	4	7-8	5	9-10	x1										
6-8	11-16	6	11-12	7	13-14	8	15-16	x2										
9-11	17-22	9	17-18	10	19-20	11	21-22	x3										
12-14	23-28	12	23-24	13	25-26	14	27-28	x4										
15-17	29-34	15	29-30	16	31-32	17	33-34	x5										
18-20	35-40	18	35-36	19	37-38	20	39-40	x6	x1									
21-23	41-46	21	41-42	22	43-44	23	45-46	x7										
24-26	47-52	24	47-48	25	49-50	26	51-52	x8	x1									
27-29	53-58	27	53-54	28	55-56	29	57-58	x9										
30-32	59-64	30	59-60	31	61-62	32	63-64	x10	x1									
33-35	65-70	33	65-66	34	67-68	35	69-70	x11										
										51021RH	51022RH	51023RH	51024RH	51028RH	51025RH	51026RH	51029RH	51027RH

*Optional to install rain hood

4-row pushbutton

Button range		Article No.																
		Audio module						Pushbutton module & nameplate module		Cover frame and flush-mounted box								
Single row*	Double row*	M251021A-x		M251022A-x		M251023A-x		M251021P4	Additional 51021DN	51021CF-x + 41021F	51022CF-x + 41022F	51023CF-x + 41023F	51024CF-x + 41024F	51028CF-x + 41028F	51025CF-x + 41025F	51026CF-x + 41026F	51029CF-x + 41029F	51024CF-x + 41024F + 51021J
		x1		x1		x1												
		Single	Double	Single	Double	Single	Double											
1-2	1-4			1	1-2	2	1-4											
3-6	5-12	3-4	5-8	5	9-10	6	11-12	x1										
7-10	13-20	7-8	13-16	9	17-18	10	19-20	x2										
11-14	21-28	11-12	21-24	13	25-26	14	27-28	x3										
15-18	29-36	15-16	29-32	17	33-34	18	35-36	x4										
19-22	37-44	19-20	37-40	21	41-42	22	43-44	x5										
23-26	45-52	23-24	45-48	25	49-50	26	51-52	x6	x1									
27-30	53-60	27-28	53-56	29	57-58	30	59-60	x7										
31-34	61-68	31-32	61-64	33	65-66	34	67-68	x8	x1									
35-38	69-76	35-36	69-72	37	73-74	38	75-76	x9										
39-42	77-84	39-40	77-80	41	81-82	42	83-84	x10	x1									
43-46	85-92	43-44	85-88	45	89-90	46	91-92	x11										
										51021RH	51022RH	51023RH	51024RH	51028RH	51025RH	51026RH	51029RH	51027RH

*Optional to install rain hood

Video outdoor station with bar pushbuttons

3-row pushbutton

Button range		Camera module	Article No.															
			Audio module						Pushbutton module & nameplate module		Cover frame and flush-mounted box							
Single row*	Double row*	M251021C	M251021A-x		M251022A-x		M251023A-x		M251021P3	Additional 51021DN	51022CF-x + 41022F	51023CF-x + 41023F	51024CF-x + 41024F	51028CF-x + 41028F	51025CF-x + 41025F	51026CF-x + 41026F	51029CF-x + 41029F	51024CF-x + 41024F + 51021J
		x1	x1		x1		x1											
			Single	Double	Single	Double	Single	Double										
1-2	1-4				1	1-2	2	2-4										
3-5	5-10		3	5-6	4	7-8	5	9-10	x1									
6-8	11-16		6	11-12	7	13-14	8	15-16	x2									
9-11	17-22		9	17-18	10	19-20	11	21-22	x3									
12-14	23-28		12	23-24	13	25-26	14	27-28	x4									
15-17	29-34		15	29-30	16	31-32	17	33-34	x5	x1								
18-20	35-40		18	35-36	19	37-38	20	39-40	x6									
21-23	41-46		21	41-42	22	43-44	23	45-46	x7	x1								
24-26	47-52		24	47-48	25	49-50	26	51-52	x8									
27-29	53-58		27	53-54	28	55-56	29	57-58	x9	x1								
30-32	59-64		30	59-60	31	61-62	32	63-64	x10									
											51022RH	51023RH	51024RH	51028RH	51025RH	51026RH	51029RH	51027RH

*Optional to install rain hood

4-row pushbutton

Button range		Camera module	Article No.															
			Audio module						Pushbutton module & nameplate module		Cover frame and flush-mounted box							
Single row*	Double row*	M251021C	M251021A-x		M251022A-x		M251023A-x		M251021P4	Additional 51021DN	51022CF-x + 41022F	51023CF-x + 41023F	51024CF-x + 41024F	51028CF-x + 41028F	51025CF-x + 41025F	51026CF-x + 41026F	51029CF-x + 41029F	51024CF-x + 41024F + 51021J
		x1	x1		x1		x1											
			Single	Double	Single	Double	Single	Double										
1-2	1-4				1	1-2	2	2-4										
3-6	5-12		3-4	5-8	5	9-10	6	11-12	x1									
7-10	13-20		7-8	13-16	9	17-18	10	19-20	x2									
11-14	21-28		11-12	21-24	13	25-26	14	27-28	x3									
15-18	29-36		15-16	29-32	17	33-34	18	35-36	x4									
19-22	37-44		19-20	37-40	21	41-42	22	43-44	x5	x1								
23-26	45-52		23-24	45-48	25	49-50	26	51-52	x6									
27-30	53-60		27-28	53-56	29	57-58	30	59-60	x7	x1								
31-34	61-68		31-32	61-64	33	65-66	34	67-68	x8									
35-38	69-76		35-36	69-72	37	73-74	38	75-76	x9	x1								
39-42	77-84		39-40	77-80	41	81-82	42	83-84	x10									
											51022RH	51023RH	51024RH	51028RH	51025RH	51026RH	51029RH	51027RH

*Optional to install rain hood

Options of keypad outdoor station

For condominium buildings and residential complexes, it is recommended to choose keypad outdoor station. And you can choose various combinations of keypad outdoor station solution according to actual scenario.

Use keypad module to realize numerical call and access control function

Keypad without pushbutton module Fig. 02-3

Besides the keyless access by inputting the correct password, it can also be used for inputting the correct call code to call indoor stations.
The call code is default starting from 1, which will call the indoor station with the address of 1.

Keypad without pushbutton but with display module (in-built RFID reader) Fig. 02-4

The display with in-built ID/IC reader can be used for multiple uses: keyless access by reading the registered proximity card, displaying some welcome messages, showing the status of calling progress, or processing the programming.
Upon programming, the name or call code can also be displayed on the screen and scrolled up and down on the keypad module.
The call code is default starting from 1, which will call the indoor station with the address of 1.

Use Keypad module to realize access control function

Keypad with pushbutton module Fig. 02-5

Keypad provides the keyless access for the residents of building by inputting the correct password.

Keypad with round pushbutton module (in-built RFID reader) Fig. 02-6

Round pushbutton module with in-built NFC/IC reader can be used for keyless access function. Meanwhile, user can make a call by pressing the round pushbutton directly.

Keypad with pushbutton and display module (in-built RFID reader) Fig. 02-7

It is the combination of keypad outdoor station and pushbutton outdoor station. It provides the most convenient calling experience for the residents and the visitors. For the residents they can input the correct password or swipe the registered proximity card. They can also press the pushbutton or scroll up and down the screen and press call button in case the resident's name is stored there.

Fig. 02-3

Keypad without pushbutton module

Aluminum Stainless steel

Fig. 02-4

Keypad without pushbutton but with display module (in-built RFID reader)

Aluminum Stainless steel

Fig. 02-5

Keypad with pushbutton module

Aluminum

Stainless steel

Fig. 02-6

Keypad with round pushbutton module (in-built RFID reader)

Aluminum Stainless steel

Fig. 02-7

Keypad with pushbutton and display module (in-built RFID reader)

Aluminum

Letter box devices

It includes three modules: camera integration module, audio integration unit and extension unit.

2.3 Selection of the indoor station

In addition to the appearance, to select the indoor station for application, the function of the project needs to be considered. The table below gives a general function list for indoor station applications.

	7" video hands-free indoor station	4.3" video hands-free indoor station	4.3" video handset indoor station	Basic 4.3" video hand-free indoor station	Audio handset indoor station	Audio hands-free indoor station
Secret conversation	x	x	x	x	x	x
Cyclical surveillance	x	x	x	x	-	-
Manual call	x	x	x	x	-	x
Doorbell call	x	x	x	x	x	x
Remote unlock	x	x	x	x	x	x
Control two locks	x	x	x	x	x	x
Room to room call	x	x	x	x	x	x
Home to home call	x	x	x	x	x	-
Paging/Broadcast	-	x	x	-	-	-
Black list	x	x	x	-	-	-
Call guard unit	x	x	x	x	x	x
SOS	x	x	x	x	-	-
Image saving	300	50	25	50 (only for specific version)	-	-
Customized audio message leaving	x	-	-	-	-	-
Call forward	x	x	x	-	-	-
Door status check	x	x	x	x	x	x
Variable ringtone	x	x	x	x	x	x
Customized password for keypad	x	x	x	x	-	-
Picture frame and screen saver	x	-	-	-	-	-
Automatic unlock	x	x	x	x	x	x
QR code for user manual reach	x	x	x	x	-	-
Mute one or mute all	x	x	x	x	only mute itself	x
Induction loop	-	x	x	x (only for specific version)	x	-
Local power supply	-	x	x	x	-	-
Surface mounted installation	x	x	x	x	x	x
Desktop installation	x	x	x	x	-	-
Flush-mounted installation	-	x	-	-	-	-
Camera interface	x	x	x	x	-	-
Repeated ringtone	x	x	x	x	x	x

Notes:
* For the function description, please find the explanation in the following pages.

Secret conversation Fig. 02-8

During the conversation between the outdoor station and the indoor station, all outdoor and indoor stations that are not involved in the conversation are temporarily excluded in order to guarantee the privacy of video door entry conversations. When calling from an outdoor station that is temporarily excluded, a time-out will indicate that the extension line is momentarily busy.

Cyclical surveillance Fig. 02-9

All indoor stations are equipped with a surveillance button which can be used to connect the outdoor stations at any time. The user sees the images from the default outdoor station. Press the button repeatedly to display images from the additional camera (if present) connected to the default outdoor station, and then from other outdoor stations.

Support camera interface to survey multi-camera Fig. 02-10

User can view target areas through analog cameras which are connected to the camera interface

Manual call Fig. 02-11

During surveillance, by picking the handset up or activating audio in case of hands-free stations, the user starts a conversation with the selected call station.

Doorbell call Fig. 02-12

Indoor stations are provided with two terminal pins used to connect the doorbell button. If the button is pressed, the indoor station emits about a 3s ring, according to the selected call ring tone (different from those of the other calls). If the user has several parallel indoor stations, and connects this button to only one indoor station, all indoor stations will ring together.

Repeated ringtone Fig. 02-13

It is allowed to set indoor station to ring repeatedly up to 30s when receiving a call, it will make residents easier to notice the incoming call.

Fig. 02-8

Secret conversation

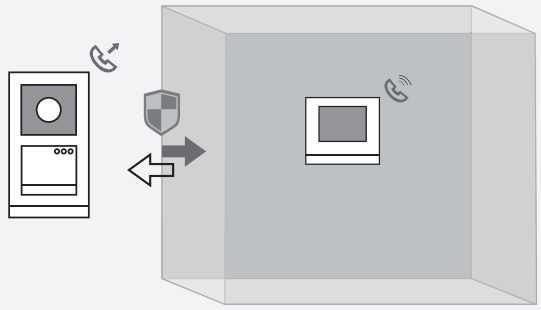

Fig. 02-9

Cyclical surveillance

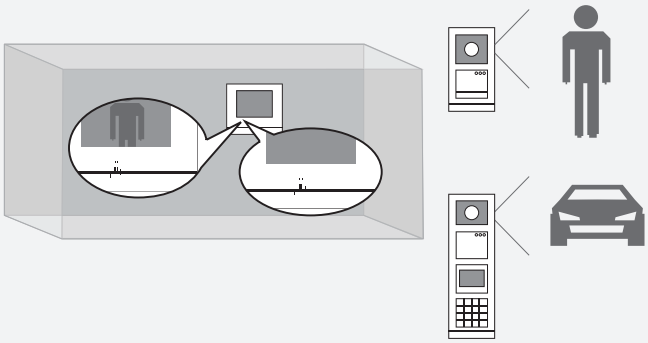

Fig. 02-10

Support camera interface to survey multi-camera

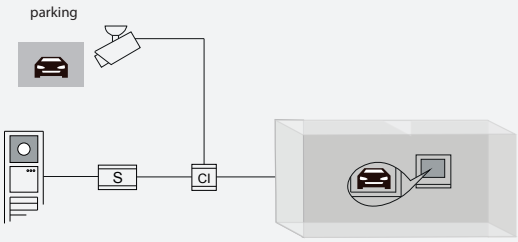

Fig. 02-11

Manual call

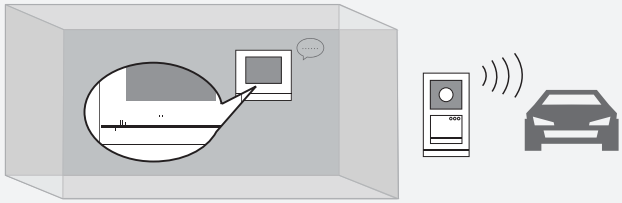

Fig. 02-12

Doorbell call

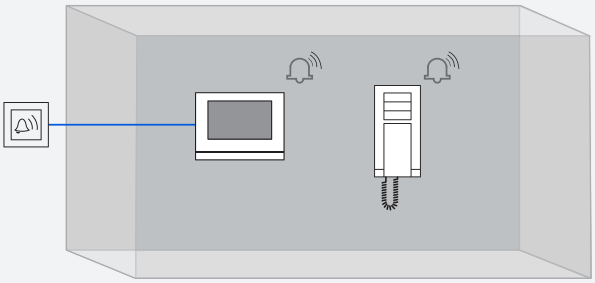

Fig. 02-13

Repeated ringtone

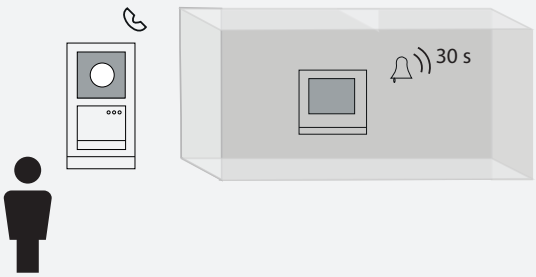

Remote unlock Fig. 02-14

With the system at reset, the user can open the lock of the default outdoor station at any time. During a conversation, the user can release the door lock associated to outdoor station making the call.

Control two locks Fig. 02-15

Two locks can be connected with outdoor station, one is for pedestrian gate and the other is for driveway gate. User can press "unlock" button and programmable button (e.g. button 1, release 2nd lock function is programmed first) to control the two doors respectively.

Room to room call and home to home call Fig. 02-16

If there are several indoor stations in parallel, after programming an indoor station for internal intercom function, user can activate the intercom call at this indoor station, all other indoor stations will ring together.

For several different apartments, after programming an indoor station for external intercom function, user can activate the intercom call at this indoor station, the called indoor station will ring.

Paging/Broadcast Fig. 02-17

User can activate the broadcast function by entering broadcast menu, a message can be forwarded through all indoor stations in the same apartment.

Blacklist Fig. 02-18

To be safe, for home to home calls, an unwanted caller can be blacklisted.

Call guard unit Fig. 02-19

This function allows communication with the guard unit. Enter communication menu to send the call to the guard unit or press a programmable button (call guard unit function is programmed first) to activate the call.

Send SOS Fig. 02-20

If there is emergency, user can send an SOS message to guard unit by pressing programmable button 1 for 3s. Guard unit will receive the SOS message which indicates apartment that is sending SOS.

Image saving Fig. 02-21

Users can find who has recently been at the door from the history menu. Either manual snapshots during conversation or automatic snapshots after ringing bell in your absence will be saved in history.

Customized audio message leaving Fig. 02-22

Before going out you can record an audio message for a family member or visitor who rings the bell.

Fig. 02-14

Remote control

Remote unlock at any time for default outdoor station

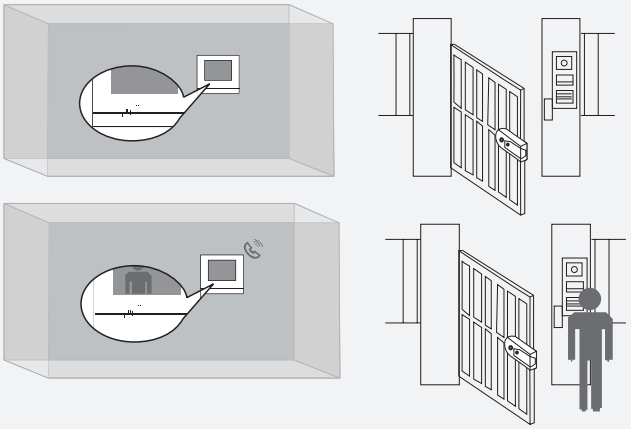

Fig. 02-15

Control 1st and 2nd locks

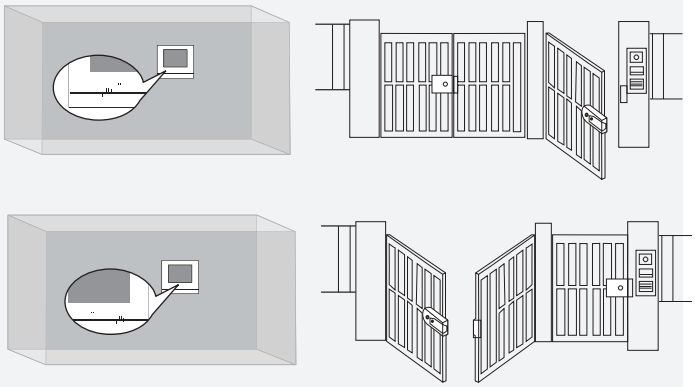

Fig. 02-16

Room to room call

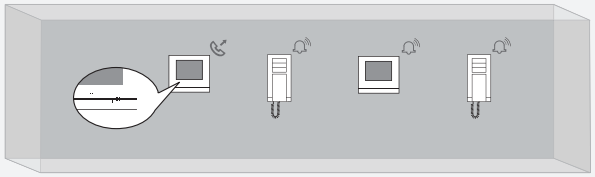

Home to home call

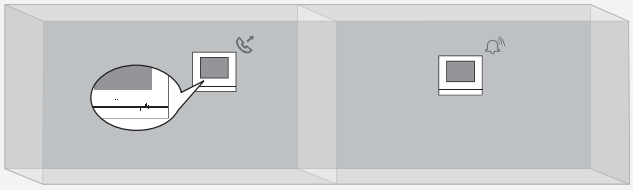

Fig. 02-17

Paging/Broadcast

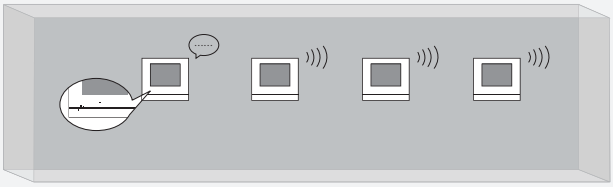

Fig. 02-18

Call guard unit

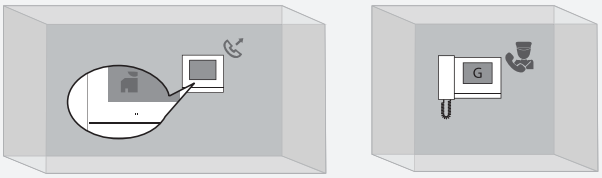

Fig. 02-19

Image saving

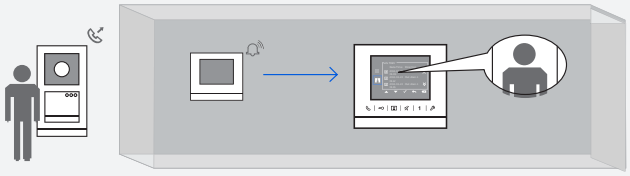

Fig. 02-20

Blacklist

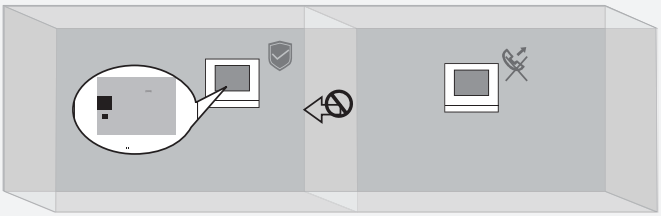

Fig. 02-21

Send SOS

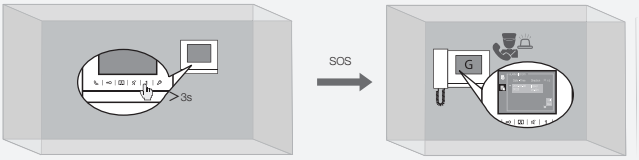

Fig. 02-22

Customized audio message leaving

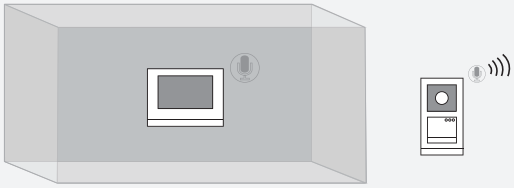

Call forward Fig. 02-23

It is possible to forward an incoming call when absent from home. Through the setting at indoor station, the incoming call can be forwarded from home to the selected neighbor or the guard unit.

Door status check Fig. 02-24

A sensor is connected with outdoor station. If this door is open for over 120s, the unlock button LED of the indoor stations and guard units will flash. When the door is closed, the LED will be off. If 2 or more outdoor stations are associated, the LED will be off when all outdoor stations are closed and will flash when at least one outdoor station is open.

Variable ringtone

Users can select the ring tone for default outdoor station or other outdoor stations or the doorbell ring tone among the 5 available ones.

Customized password for keypad

Users can set a private 3-8 digit password at indoor station to use at home.

Picture frame and screen saver Fig. 02-25

When the indoor station is in standby mode, its appearance will blend with the decor. With an SD card, the indoor station can display high-resolution files from the computer or camera directly on the touch display. The display time can be adjusted.

Automatic unlock Fig. 02-26

This function is used mainly in the service sector (offices, doctors, professional). This feature can be activated or deactivated at the indoor station. With the function activated, LED unlock will light, and after receiving a call, unlock command will be sent automatically.

QR code for user manual access interface Fig. 02-27

Users can scan QR-Code contained in the menu of video indoor stations directly to get the detailed manual. For the audio indoor station, QR-Code is contained in the quick guide.

Mute one/mute all indoor station Fig. 02-28

User can mute the ringtone when there's an incoming call. Press the mute button to mute the indoor station. If the user has several parallel indoor stations, long-press the mute button for about 3s at one indoor station, and all indoor stations will mute together when there's an incoming call. When the function is activated, the LED MUTE turns on.

Induction loop Fig. 02-29

Indoor station with an induction loop allows hearing-impaired persons to wear a hearing aid (working in "T" mode) to hear the ringtone and the voice of visitors.

Local power supply

Indoor station can be powered by an additional power supply when a parallel indoor station needs to be installed without impacting the entire system.

Fig. 02-23

Call forward

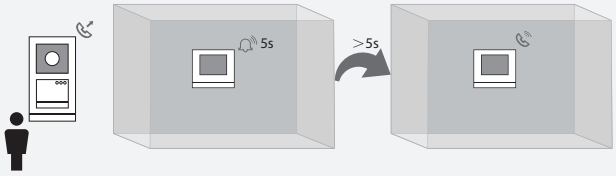

Fig. 02-24

Picture frame and screen saver

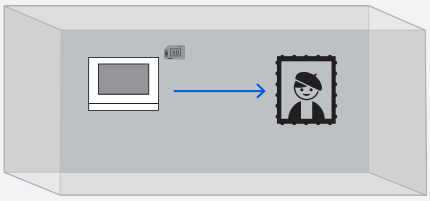

Fig. 02-25

QR code for user manual access interface

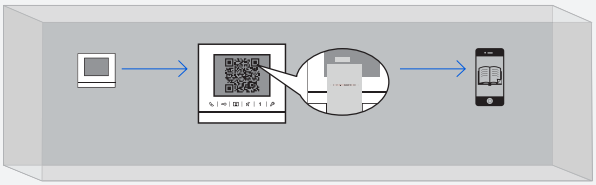

Fig. 02-26

Induction loop for hearing aid

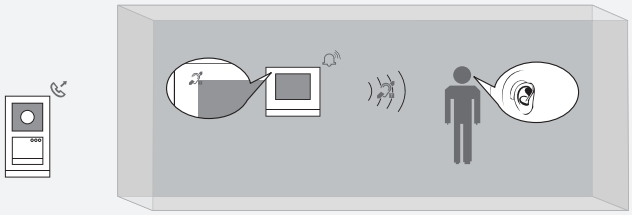

Fig. 02-27

Door status check

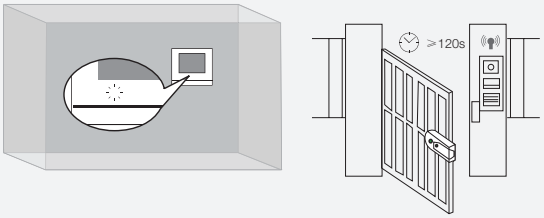

Fig. 02-28

Automatic unlock

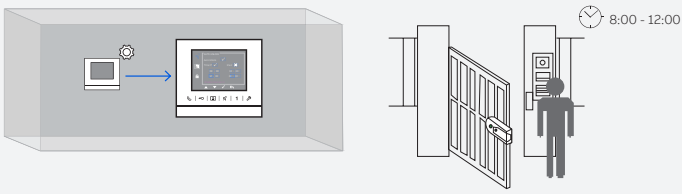

Fig. 02-29

Mute one and mute all

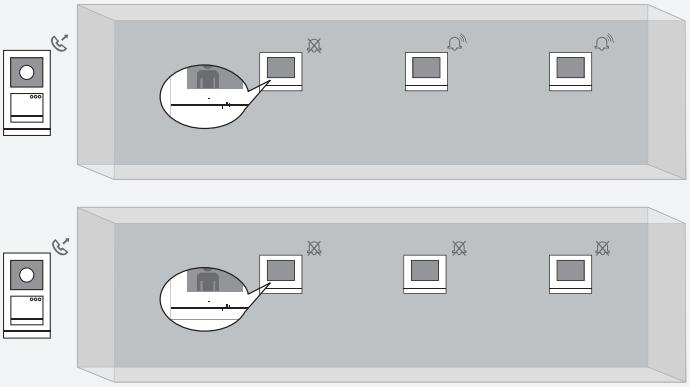

2.4 Selection of system devices

It's important to select the appropriate system devices to set up an ABB-Welcome system. Both device function and topology for the application needs to be considered. System controller is a must for any insulated system; other system devices can be selected to meet the specific project requirement.

System controller, local power supply and auxiliary power supply

System controller provides both power and communication command for an ABB-Welcome system. An extension of the system controller, auxiliary power supply and local power supply serve as the supplement to provide a flexible power solution to meet the varying requirements of the ABB-Welcome system. The illustration shown is a project case using three power sources. Fig. 02-30

System controller

Working as the "brain" of all devices, a system controller is compulsory and exclusive in any insulated system. It not only provides power, but also manages all the communication and control between outdoor stations and indoor stations in the building part,and between gate stations and the gateway in the common part.

For those systems with multi-system controllers, it should be broken down into several insulated systems and every insulated system needs separate power consumption and distance limit calculation.

Both standard system controllers and mini system controllers are provided to meet different project needs.

The system controller has two working modes: "all on" and "one on," "all on" and "one on" are system behavior for screen switching on for the indoor stations with the same address (parallel indoor stations) in case of being called. Under "all on," the master video indoor station and other slave video indoor station(s) will all switch on the screens and ring at the same time upon being called from the outdoor stations or gate stations. Under "one on," only the "master" video indoor station will switch on the screen and ring, the other "slave" video indoor station(s) will ring but will not switch on the screen. Fig. 02-31

Power units of system controller

As system controller will provide the power for the system, it is important to calculate the available power unit of standard system controller or mini system controller for the system before application.

For a 2-wire system, the available power unit of a system controller needs first consider the situation of 1 or ⩾ 2 apartments.

To achieve a comfortable door communication experience in all applications, different values of working power will always be reserved first to handle the simultaneous working of different devices (door call, setting, doorbell) before being allocated to the standby devices.

Since the power calculation is based on the remaining standby
current after subtracting the varied reserved working current in 1 or ⩾ 2 apartments, thus, the power units of system controller varies when the system contains 1 or ⩾ 2 apartments, which has been revealed in Table 1 (page 69).

Moreover, the "all on" and "one on" mode setting will impact the power consumer calculation when one apartment contains
more than one video indoor station (parallel indoor stations). As we can see from the power and distance table in Table 1 on page 69, for one additional video 4.3" indoor station when the system controller is under "all on" mode, 23 more consumer units should be counted, while only 11 consumer units are counted when system controller is under "one on" mode. In the real project, the balance can be made between cost and comfort.

Fig. 02-30

Application of system controller, local power supply and auxiliary power supply

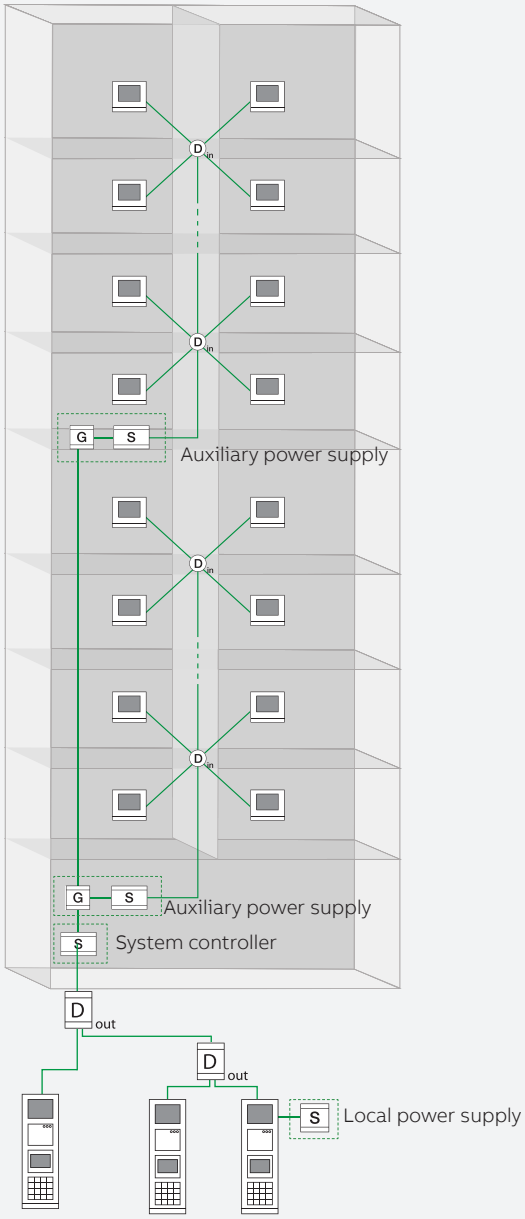

Fig. 02-31

"All on" and "One on" setting of system controller

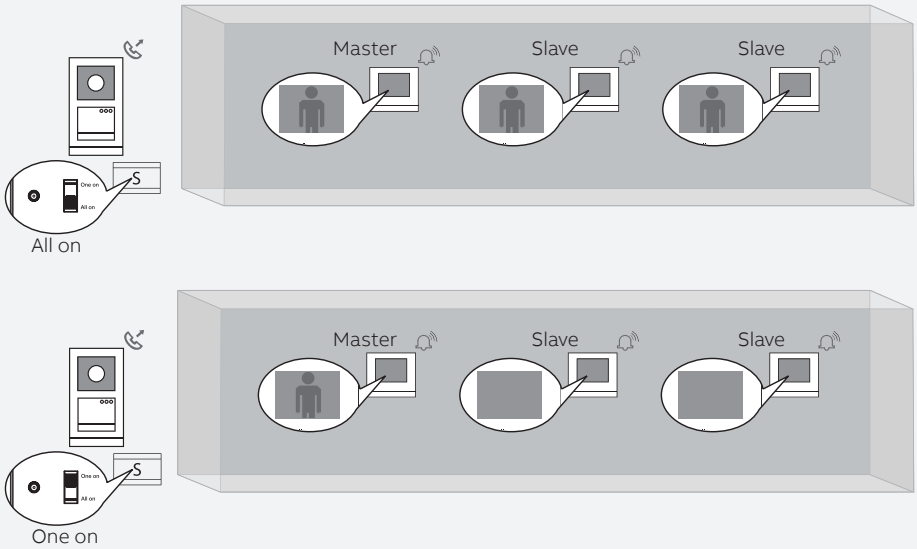

Local power supply

Local power supply and system controller are exactly the
same devices, but they are named differently because of the different functions they serve.

» Local power supply only provides the pure power source without giving communication commands like the system controller.
» Unlike the system controller or auxiliary power supply that provides the power for all the devices in the external and internal bus line through the 2-wire bus terminal, local
power supply provides the pure power to individual devices directly by connecting the local power supply terminals.
» Devices below contain local power supply terminals, and can be powered by local power supply:
  » Audio module of outdoor station
  » 4.3" video handset/hands-free indoor station
  » Guard unit

Despite the fact that the physical product is like the system controller, the working mode setting of the local supply power is useless.

Power units of local power supply

One mini local power supply can feed:

» Up to 4 pcs of parallel 4.3" video hands-free indoor station
» Up to 4 pcs of parallel 4.3" video handset indoor station
» Up to 4 pcs of parallel guard units
» 1 pc of any kind of pushbutton outdoor station
» 1 pc of any kind of keypad outdoor station

Even though one standard local power supply doubles the capacity compared to one mini local power supply, the user will not need it.

For parallel 4.3" video indoor stations in one apartment, the screen of any one fed by local power supply will always be on for incoming calls, even in "one on" setting in system controller. Fig. 02-32

When the device is fed by local power supply, it requires rather small power consumer unit from the system controller, which is shown in Table 1 on page 69. The saved power of system controller, which be used to increase the number of devices under this system controller.
The increased number of devices can be the increased quantities of apartments in one building or the increased quantities of parallel indoor stations within one apartment.

Based on the calculation rule in Table 1 (page 69), specifically, for scenarios below when the power units of one system controller is smaller than required consumer units of devices, local power supply is highly recommended. This is due to the fact that compared to auxiliary power supply, local power supply solution will be less cost and easier wiring:

» When the total consumer units of external and internal bus > power unit of system controller, while the total consumer units of the devices on internal bus ⩽ power unit of system controller, one or all outdoor stations should be powered by local power supply.
» When feeding the local power supply to parallel slave 4.3" video hands-free or 4.3" video handset indoor station(s), the total power consumer units will become ⩽ power units of system controller.
» When feeding the local power supply to guard unit, the total power consumer units will become ⩽ power units of system controller. Fig. 02-33
» When adding the parallel 4.3" video hands-free or 4.3" video handset indoor station to an apartment after the door communication system installation had been finished in the past. Since the additional device might cause the system controller to inadequately cover the increased consumer units, it is safe to put local power supply to additional 4.3" indoor station to that particular apartment without affecting the existing power solution. Fig. 02-34

Fig. 02-32

Local power supply for parallel indoor stations

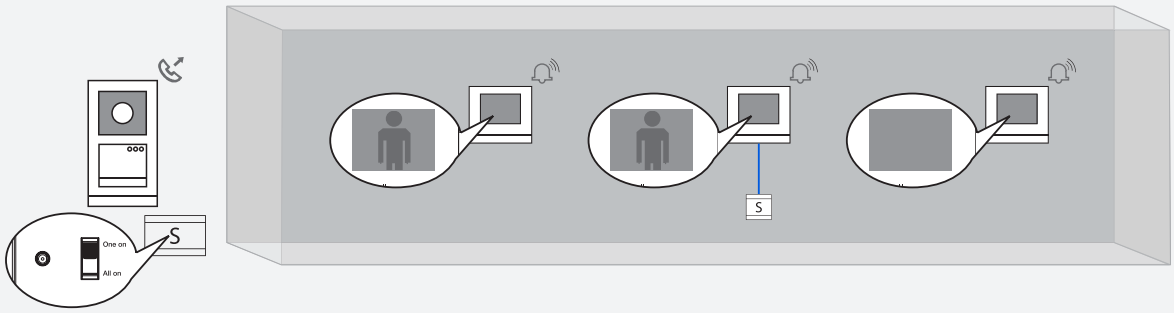

Fig. 02-33

Feed parallel 4.3" video indoor stations by mini local power supply

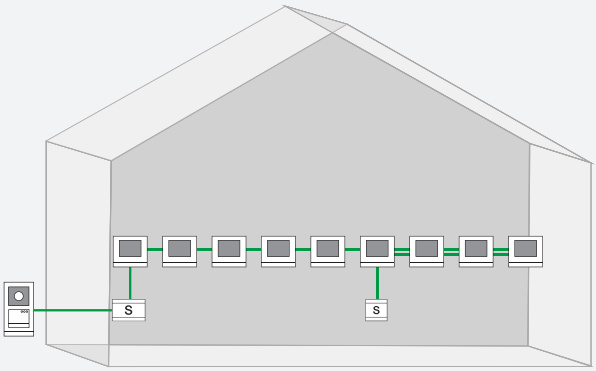

Note:
1. Standard system controller "all on" mode, supports 1 outdoor station + 5 parallel 4.3" video hands-free indoor stations
2. Mini local power supply, feeds 4 pcs 4.3 video hands-free indoor stations

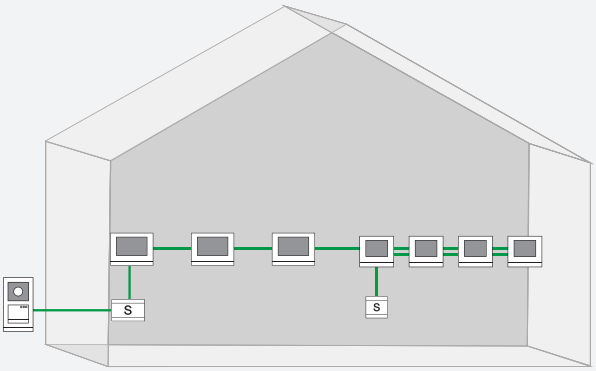

Note:
1. Standard system controller "all on" mode, supports 1 outdoor station + 3 parallel 7" video hands-free indoor stations
2. Mini local power supply, feeds 4 pcs 4.3 video hands-free indoor stations

Fig. 02-34

Add parallel 4.3" video indoor stations to apartments after installation

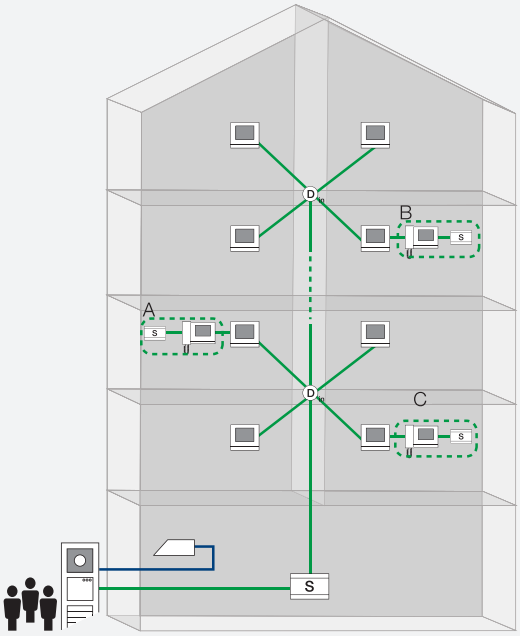

Note:
In 2013, the door entry system for this building was installed. Afterwards, Apartment A, B and/or C were required to add one more video indoor station with local power supply without affecting other users.

Auxiliary power supply

For one insulated system, when adding the local power supply to the devices in external bus or internal bus, if both ways still cannot cover the required consumption units of the devices, auxiliary power supply is suggested. The combination of gateway (under auxiliary power supply mode) and system controller will make an auxiliary, which can be used to split the system into two insulated systems. Fig. 02-35

Like system controller, the "all on" and "one on" mode setting will impact the power consumption calculation in parallel indoor stations.

When the application needs more than one mini outdoor station, it can also use auxiliary power supply for this case. Fig. 02-36

Fig. 02-35

Auxiliary power supply

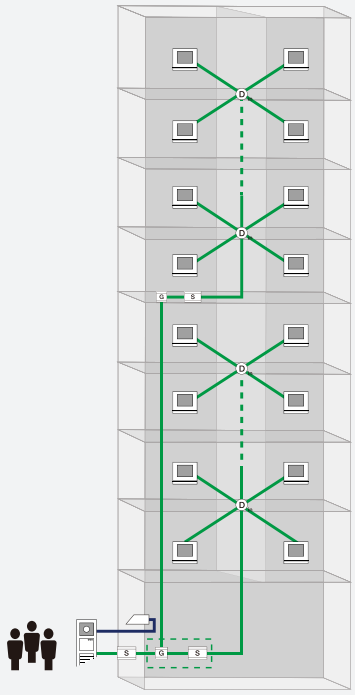

Fig. 02-36

Auxiliary power supply for mini outdoor stations

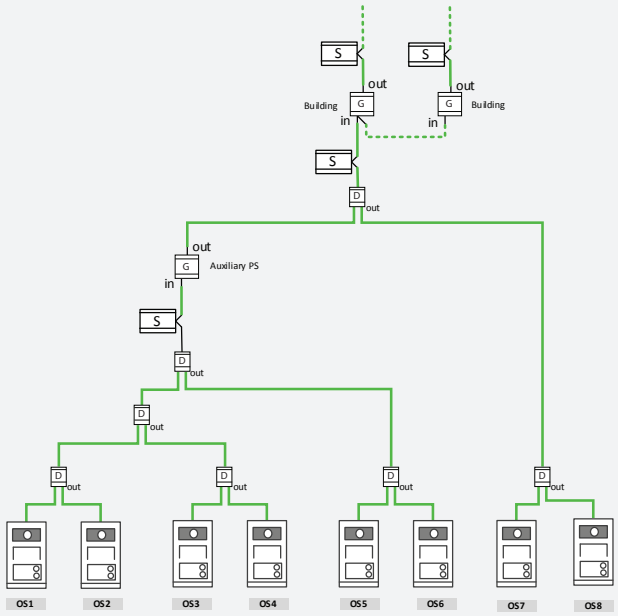

Gateway

For the system with multi-system controllers, gateway is needed to make each insulated system (managed by one system controller) interact with devices installed in the common part.

Gateway offers high level flexibility for application with 5 different working modes. The modes of gateway can be set as below:

» Building gateway
» Floor gateway
» Apartment gateway
» Auxiliary power supply
» Line amplifier

For setting the gateway working mode, please refer to page 105.

Building gateway mode

Building gateway is mainly applied to building systems that enables one building to be an independent sub insulated system within a residential complex. Each building supports up to 250 apartments. Fig. 02-37

Or, it can be used for a building with more than 250 apartments by making 2 insulated building systems for this building. Fig. 02-38

It supports 60 such application systems. The address of building gateway should be set one upon another in sequence from 1 to 60.

Fig. 02-37

Building gateway application for building systems within a residential complex

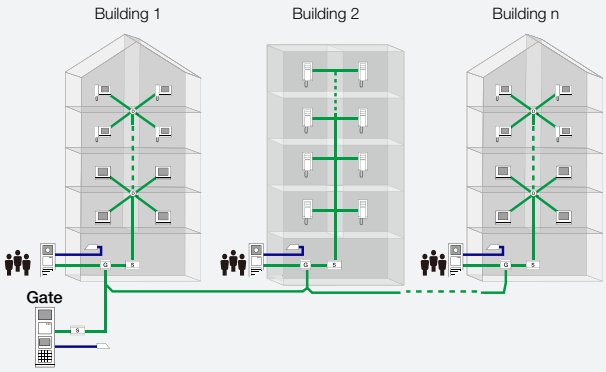

Fig. 02-38

Building gateway application for high-rise building with more than 250 apartments

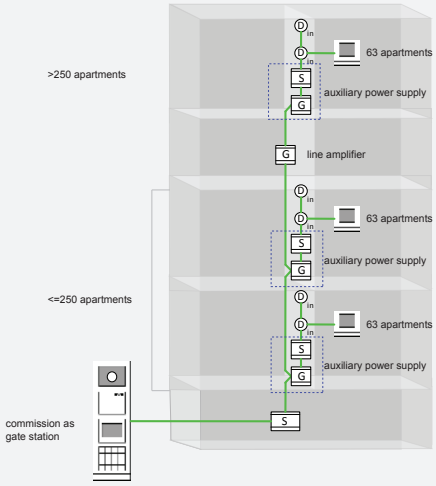

Floor gateway mode

Floor gateway is mainly applied to floor systems, which enables a floor outdoor station and multi-apartments on the same floor to be an independent sub insulated system within the building. Fig. 02-39

It can also be used for a small residential complex that uses pushbutton outdoor station as gate station. Fig. 02-40

The starting address of one floor gateway should be minimal address of indoor station of this floor.
A total of 99 addresses are available in floor gateway mode.
Please refer to page 106 for commissioning of gateway.

Fig. 02-39

Floor gateway application for floor systems within the building

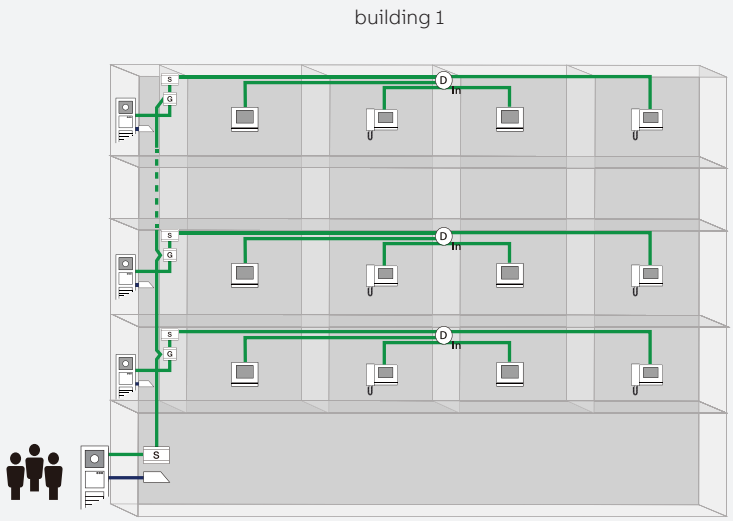

Fig. 02-40

Floor gateway application for small residential complex

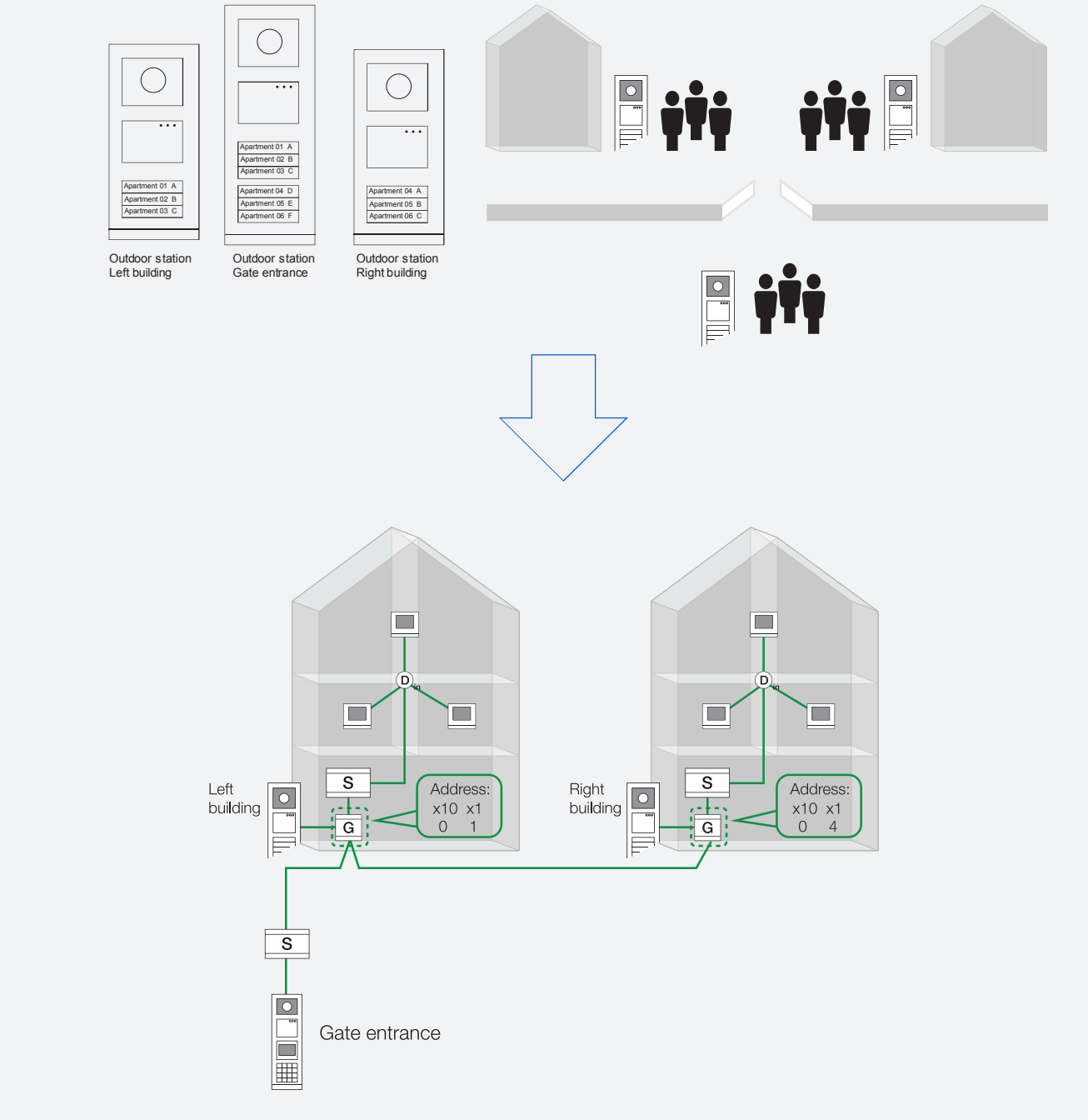

Apartment gateway mode Fig. 02-41

Apartment gateway is mainly applied to apartment systems, which enable an apartment with a second confirmed outdoor station to be an independent sub insulated system within the building.

It can also be used for the application of a group of villas/ single family houses in a residential complex. The address of apartment gateway should be set one upon another in sequence from 1 to 99.

Auxiliary power supply mode

The system controller must combine the gateway set as auxiliary power supply mode to feed the system with extra power. The additional system controller is used to split the system into two insulated systems.

There is no need to set address for auxiliary power supply.

Line amplifier mode

Line amplifier is used to extend the distance of signal when it is not enough. The distance extended by one amplifier will vary according to cable type.

Please refer to page 71 Table 2-3 for the distance calculation. The position to install the amplifier is recommended at the end of the maximum distance of the cable. Fig. 02-42

Example:
A project of a residential complex with 10 buildings, looped through with 10 building gateways, whose wiring distance from gate station to last building is 300 m, cable RVV, Ø=1 mm is used.

User case analysis:
The attenuation units of the 10 building gateways are 15 units (1.5 unit x10). If with cable RVV, Ø=1 mm, according to the Table 2-3, the max. distance can be counted as 170 m, which is <300 m.

Solution:
One gateway in amplifier mode is needed to split into section A and section B.

Gateway address	1st	2nd	3rd	4th	5th	6th	7th	8th	9th	10th
Actual distance	30 m	60 m	90 m	120 m	150 m	180 m	210 m	240 m	270 m	300 m
Solution:	Section A is from gate station to 5th building, the attenuation unit is 7.5 unit (1.5 unit x 5), the max. distance is 180 m, ≥ the real distance 150 m.					Section B is from 5th building to 10th building, the attenuation unit is 7.5 unit (1.5 unit x 5), the max. distance is 180 m, ≥ the real distance 150 m.				
Reference table:	Table 2-3					Table 2-3				

The solution is to install the gateway as line amplifier mode at 6th building for maximum use of cable.

There is no need to set address for line amplifier.

Fig. 02-41

Apartment gateway application

1. For apartment systems within the building

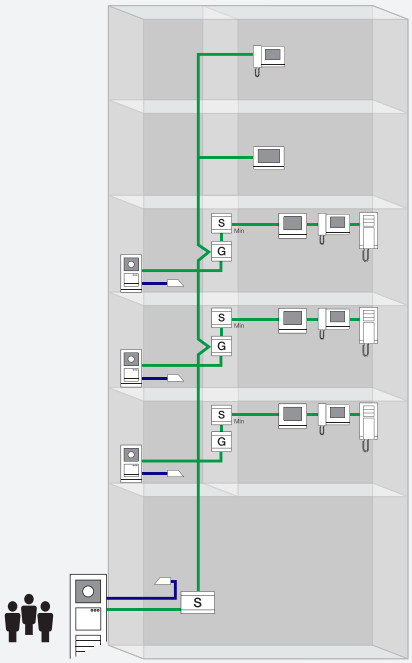

2. For a group networked villas

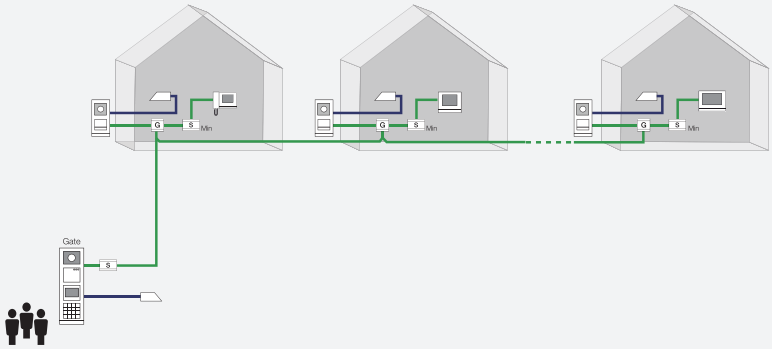

Fig. 02-42

Line amplifier application

Maximum quantity limitation of gateway pass through to an apartment

Note: A maximum of 4 gateways in audio system or 3 gateways in video system can be passed through to any apartment, regardless of the mode of gateway, except this combination: building gateway + floor gateway + apartment gateway. (The looping of gateway is not counted.) Fig. 02-43

For example, for building n
» For floor 1 and floor 2, total 3 gateways
» For floor 10, up to 4 gateways, which is the maximum

For each building, a maximum of 2 gateways for each apartment is allowed, either building gateway + floor gateway, building gateway + apartment gateway, or floor gateway + apartment gateway. It is not allowed building gateway + floor gateway + apartment gateway. Therefore, floor 10 cannot have an apartment gateway.

Power consumption units of gateway

For gateway except when it is set as line amplifier mode, the consumption unit is divided into two parts: One provided by the internal bus of system controller of one insulated system, and the other part provided by the external bus of system controller of the sub insulated system (if any). Fig. 02-44
When set as line amplifier mode, the power consumption is provided independently by the system controller that controls it.

Please refer to page 69 for Table 1 of power consumption and distance calculation. The power consumption need to be calculated exclusively by the mode:
» When it is set as building gateway, floor gateway, apartment gateway and auxiliary power supply mode, the total consumption is 7 units, with 2 units (C1) from internal bus of system controller of the insulated system and 5 units (C2) from external bus of system controller from system controller of the other connected insulated system.
» When it is set as line amplifier mode, the consumption unit is 5 from the system controller that controls it.

Attenuation unit of gateway

For looping through of one gateway regardless of the mode, 1.5 attenuation unit will be consumed.

Fig. 02-43

Maximum gateways passed through to apartments

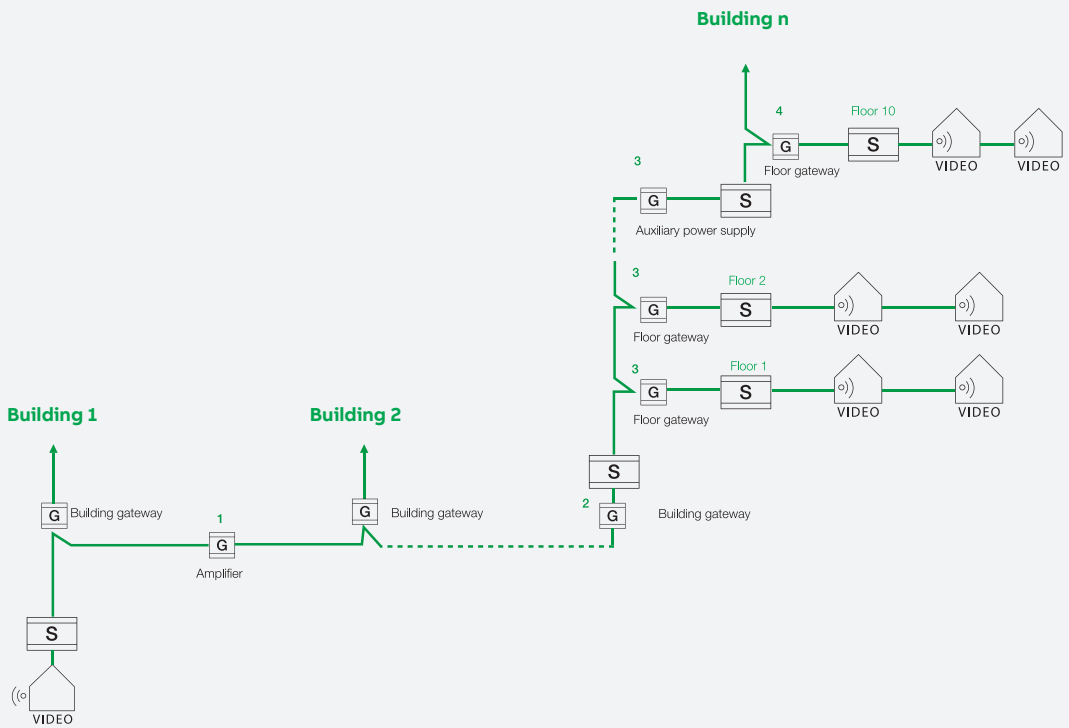

Fig. 02-44

Power consumption units of gateway

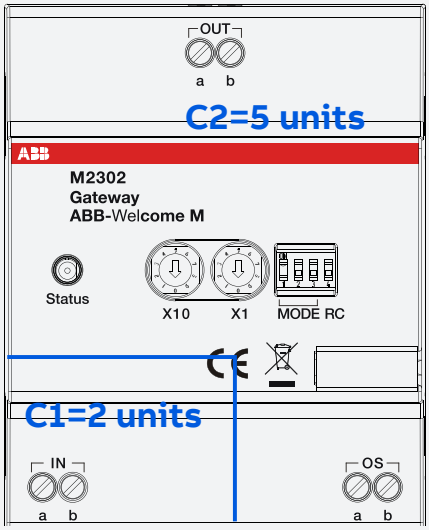

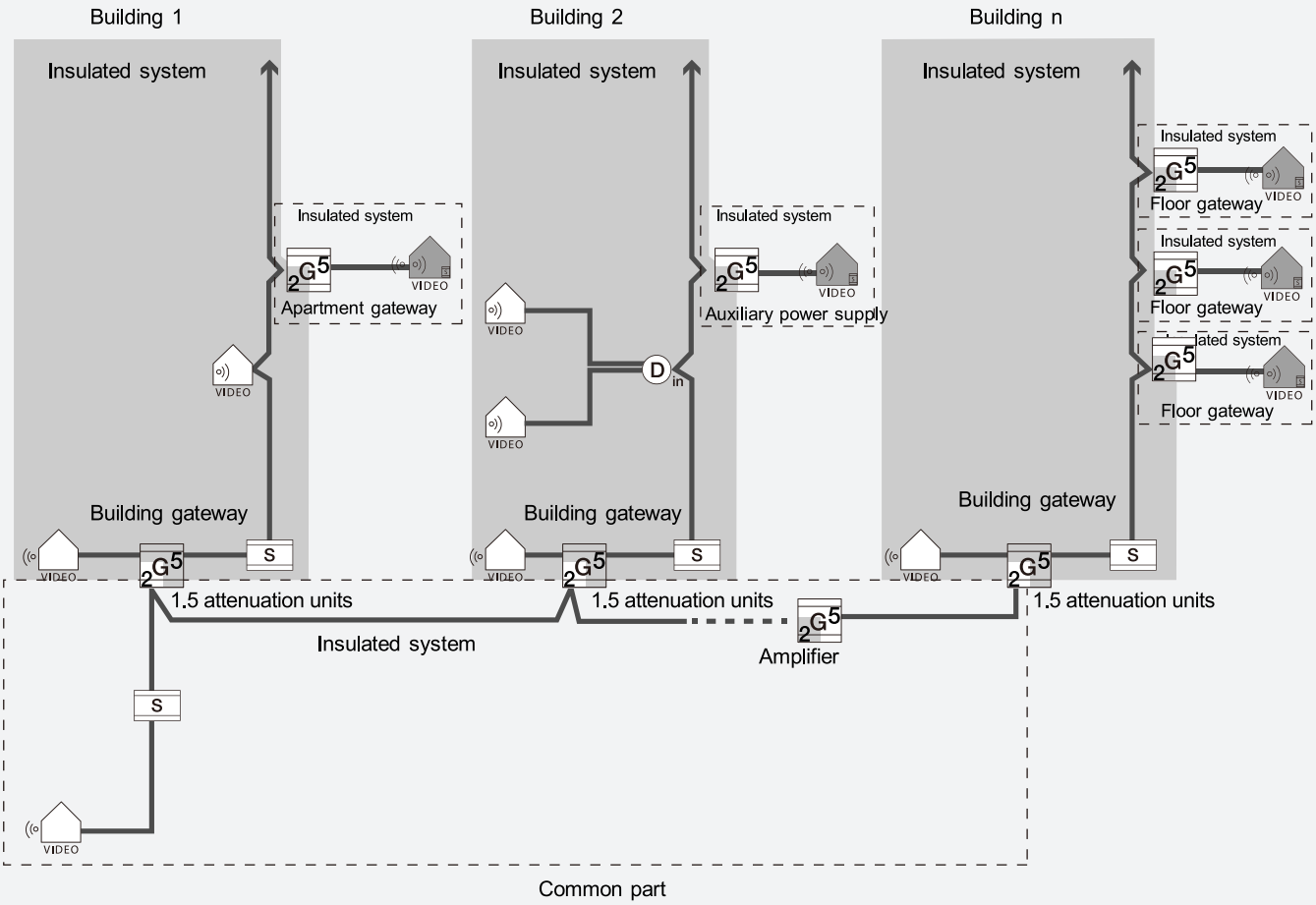

Switch actuator

As the function implementation device of the indoor station or outdoor station or guard unit, switch actuator can be installed in the internal bus or external bus in both building part and common part. Different modes can be set to realize different
functions.

- » If installing within the apartment, it can be used to extend the call to a bell or a light (switch on for a period of time when it is called). The address of the switch actuator and the indoor station should be configured to be the same. This is called "Call repetition mode." Fig. 02-45-1
- » If installing the switch actuator in the common part to connect a lock or a light, it can be controlled by any indoor station, guard unit or outdoor station in the whole system. If installing it within a building, only the devices of the given building can control it.
  For all these scenarios:
  - » If the "unlock" button of indoor station or guard unit controls the connected lock, the switch actuator address should be set as the address of outdoor station which the lock is associated with. This is called "Door opener mode." Fig. 02-45-2
  - » If the lock or light will be controlled by the programmable button of indoor station, guard unit or outdoor station, the mapping of the switch actuator address and the programmable button address should be configured. This is called "Time relay mode." Fig. 02-45-3

The local power source should be provided to the connected lock or light, as the switch actuator only provides a dry contact.

Outdoor distributor Fig. 02-46

As a video signal switching device in the external bus, outdoor station distributor should be used when more than one outdoor station or one gate station is present in a given project while at least one of the outdoor stations is video. If pure multiple audio outdoor stations are the case, the node connection is enough without the need of video outdoor distributor.

Each outdoor station distributor can connect 2 outdoor stations. The cascaded connection is also possible from outdoor station distributor to next level outdoor station distributors. As a passive device, it consumes no power, but the video signal drops a lot (15 attenuation units), thus as less level as possible of the video outdoor distributor should be achieved to have less signal attenuation for a given line.

Fig. 02-45-1

1. Call repetition mode

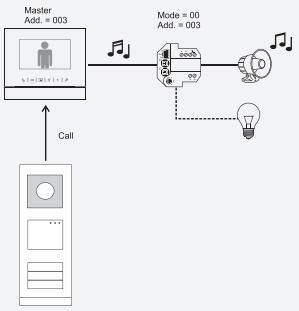

Fig. 02-45-2

2. Door opener mode

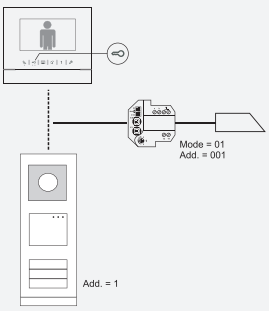

Fig. 02-45-3

3. Time relay mode

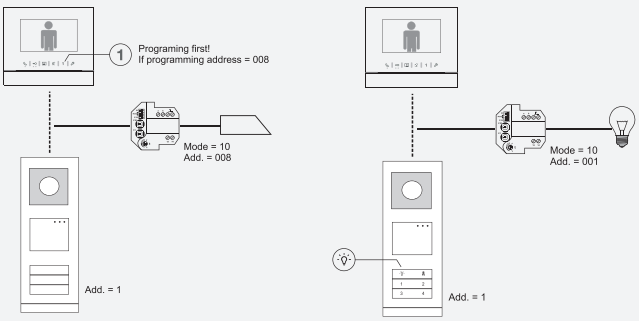

Fig. 02-46

1 level cascading connection for 2 outdoor stations with outdoor distributor

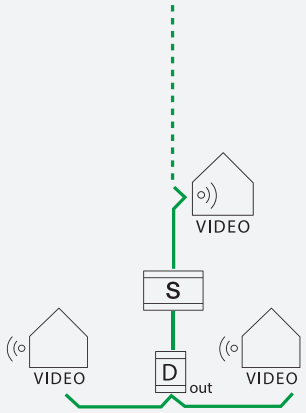

2 level cascading connection for 3 outdoor stations with outdoor distributor

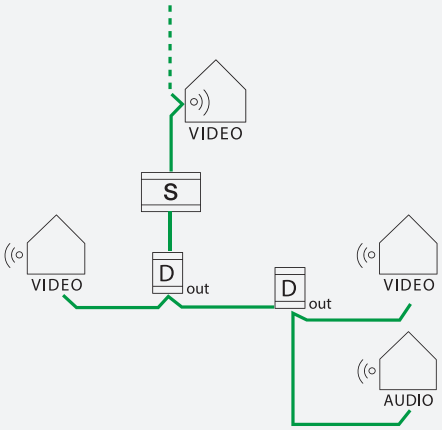

2 level cascading connection for 4 outdoor stations with outdoor distributor

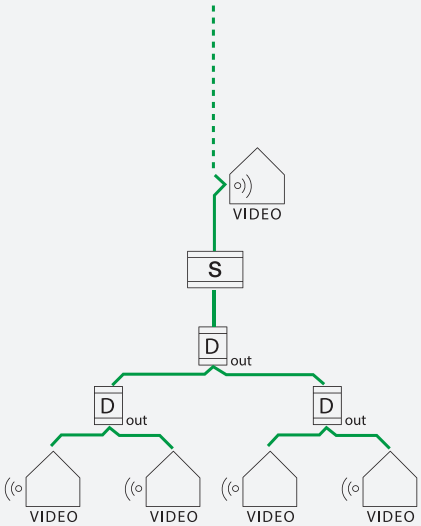

3 level cascading connection for 8 outdoor stations with outdoor distributor

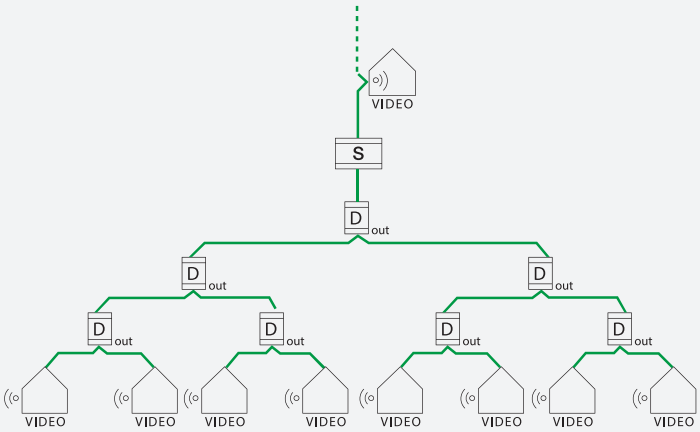

Video distributor

As a video signal branching device in the internal bus, video distributors should be used when star connection is needed for the apartments in the building part and for the gateways in the common part. For the audio system, the video distributor is not needed in the building part and the common part. Fig. 02-47

Each video distributor can connect up to 4 apartments or 4 lines in the building part and 4 gateways in the common part. The cascaded connection is also possible. The impact of the distance can be reviewed from the distance calculation in Table 2 on page 71.

When video distributor is used in the common part, the total distance of all the lines branched by the video distributor under one system controller should be less than 800 meters. Auxiliary power supply can be used to split the whole distance into several sections, which can ensure each section meet the 800 meter distance limit with one system controller. The distance constraint from different cables should also be considered. Please check page 71 to view the details.
Fig. 02-48

Guard unit

As the management interface, the desk-top supported guard unit in the 4.3" touch screen can interact with gate stations, outdoor stations, indoor stations and even the other guard units efficiently. PC or laptop can also be connected to efficiently edit resident information by a universal USB cable.
Fig. 02-49

For added security, guard unit can act as a panic reception center, receiving the emergency call from any indoor station by activating the "SOS" signal. Additionally, the interception in day/night mode can be set with customized timeline and receivers (for all or just VIPs), the call will be directed to the guard unit for monitoring purpose when the visitor call the resident directly from the gate/outdoor station. Finally, when the outdoor station or gate station's "call guard" function is activated, for example by a one-button video gate station, the operator in the guard unit will intercept all calls from visitors and transfer the filtered call to the dedicated indoor station. Fig. 02-50

Fig. 02-47

Star sharp connection in common part by distributors

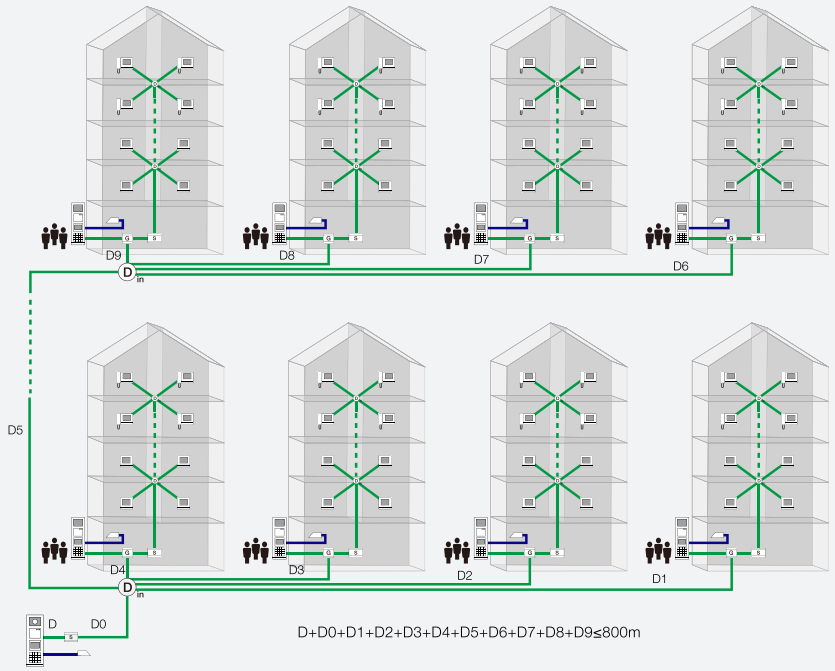

Fig. 02-48

Use one auxiliary power supply in common part

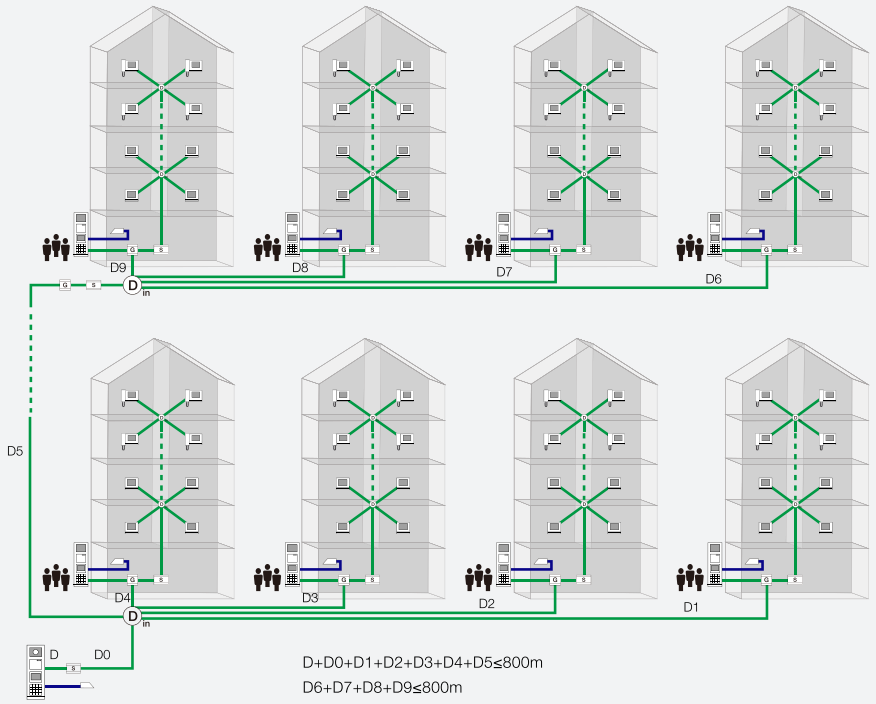

Fig. 02-49

Connect guard unit and PC or laptop by USB cable

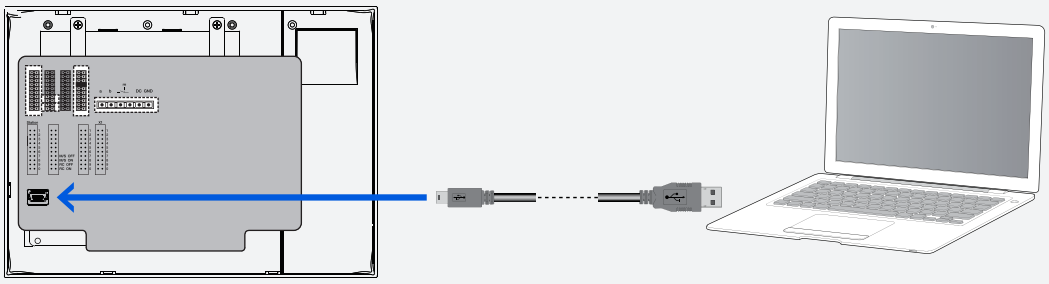

Fig. 02-50

Intercept function of guard unit

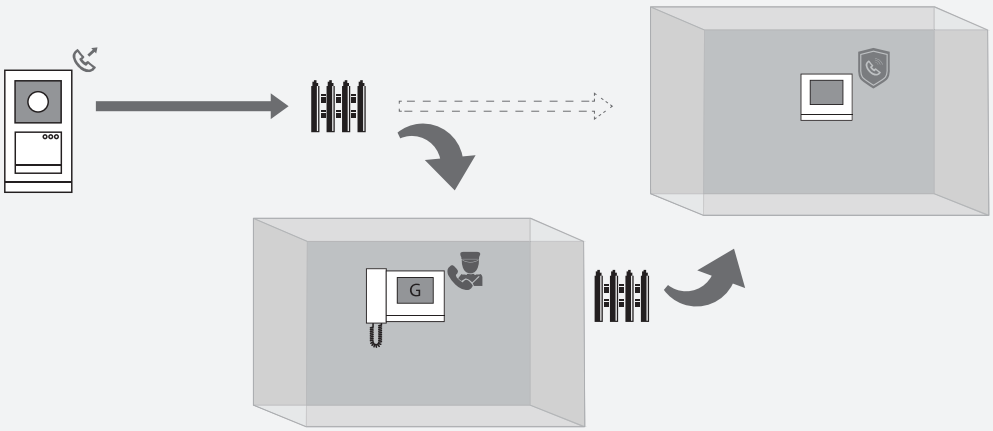

Camera interface

The camera interface integrates common analog camera into the ABB-Welcome door entry system and up to 4 analog cameras can be connected with it. Each external camera is powered by itself.

Camera interface can be operated with or without an assigned outdoor station, also it can be assigned to indoor station and guard unit. User can see the video coming from the camera interface by pressing repeatedly "surveillance" button on video indoor station.

Suitable for flush-mounted installation, surface-mounted installation with screws, and installation on mounting rails with DIN adaptor.

There are 4 working modes.

Mode=1, work as an independent outdoor station Fig. 02-51

Camera interface can work as a special video outdoor station. It is numbered orderly as outdoor station (1~9).

Mode=2, work associated with outdoor station Fig. 02-52

If an audio/video outdoor station is assigned to the camera interface, the connected external cameras will serve as a system camera, i.e. the external camera is automatically activated with a door call from the assigned outdoor station.
A total of 15 cameras can be set for each outdoor station, including its own cameras.

Mode=3, work associated with guard unit Fig. 02-53

If a guard unit is assigned to the camera interface, during the communication with indoor station, users can send the video to indoor station captured in the guard unit room.
A total of 15 cameras can be set for each guard unit.

Mode=4, programming mode Fig. 02-54

During programming mode, outdoor station, guard unit and indoor station can be set to associate with camera interface depending on different applications.
If the camera interface is set to associate with indoor station and there is a level push button is connected to this indoor station.
When we press level push button, the image from the camera will be displayed on VIS directly. (it needs to set "visual doorbell" function on indoor station first.)

Fig. 02-51

Mode=1, work as an independent outdoor station

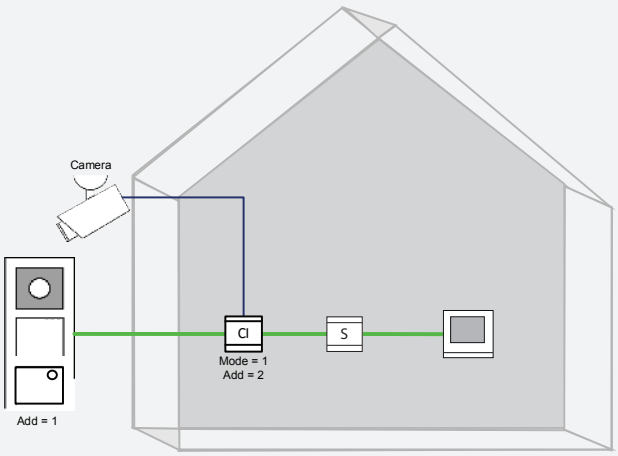

Fig. 02-52

Mode=2, work associated with outdoor station

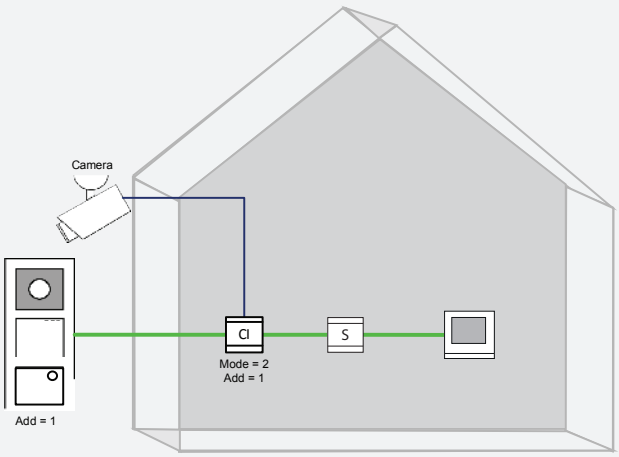

Fig. 02-53

Mode=3, work associated with guard unit

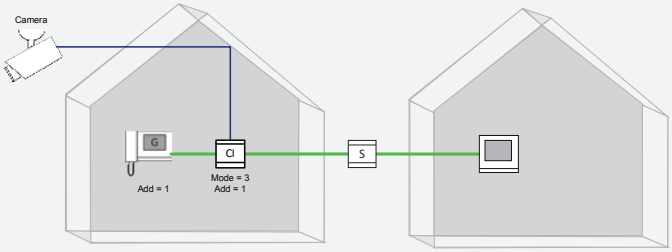

Fig. 02-54

Mode=4, programming mode

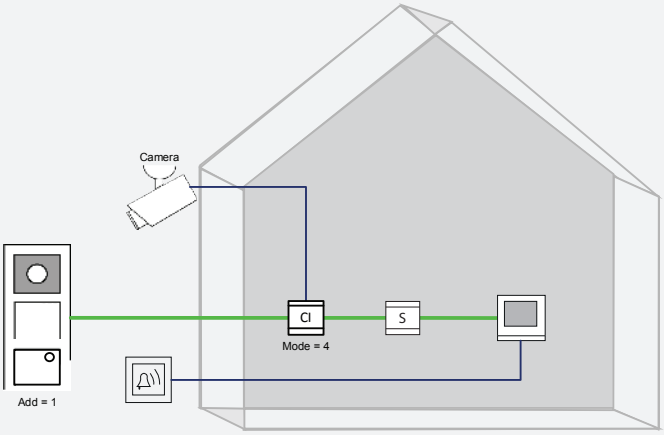

IP-Gateway

IP-Gateway enables ComfortTouch or smartphone and tablet (iOS and Andriod) with installed Welcome app as a video indoor station. It supports user to establish the call from vistors, control doors or switch on lights by WIFI or remote access under 3G/4G with the help of server provider. Also IP-Gateway is a configured interface for other Welcome products, like telephone gateway. Fig. 02-55

Up to 4 terminal devices (including ComfortTouch & tablet & smartphone) can be connected with one IP-Gateway. For the setup and use of the terminal devices with IP-Gateway, the following is required:

1. Register and logging into my.abb-livingspace.com. Get your own user account from the server.
2. Connect the IP-Gateway to ABB portal. Configure the IP-Gateway by PC, when this PC and IP-Gateway are connected to the same network by one router. Enter your own user account by "Portal Login" menu.
3. Install the APP on the terminal devices, and login with your own user account.
4. Coupling the IP-Gateway and terminal devices.

Fig. 02-55

ComfortTouch and smartphone and tablet (iOS and Andriod) with installed Welcome app

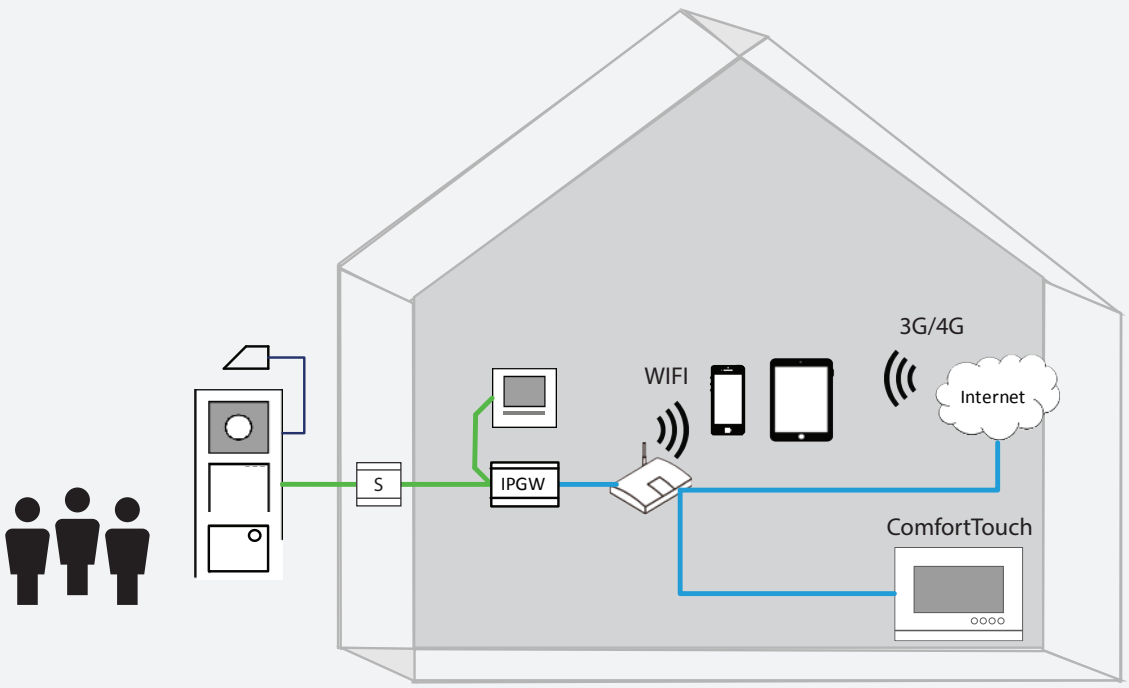

Telephone gateway

Telephone Gateway is part of the Welcome door entry system and operates exclusively with components from this system. The product serves for connecting a telephone system to a Welcome system, so that the connected telephones will act as audio indoor stations. It supports user to establish the call from visitors, initiate call to outdoor stations, control doors or switch on lights. For using the Telephone Gateway it is necessary to configure the device as an analogue subscriber of your telephone system. Fig. 02-56

Each Telephone Gateway supports up to 250 apartments in the same building.

The following components are required to operate the Telephone Gateway:

- A Welcome door communication system including the System Controller and at least one Outdoor station
- A Private Branch Exchange (PBX) with analogue subscriber interface
- At least one telephone for configuring via Dual Tone Multi Frequency (DTMF)

Lift control relay module

As an elevator control device, Lift control system consists of M adaptor and lift control relay module, you can use these devices to allow access by authorized visitors to specific floor. It is convenient to the residents to take the lift when coming home by just inputting the password or swiping the card on outdoor station. Fig. 02-57

For visitor part, visitor calls indoor station by inputting dedicated address, then resident press "Unlock" button, The lift will go down to the Outdoor Station floor automatically, the visitor enters the lift. Within the given set time, the visitor can only activate the dedicated floor related with the indoor station address, while other floor no. will not be activated all the time.

For resident part, resident enters the door by inputting the password or swiping the authorized card. The lift will go down to the Outdoor Station floor automatically, the resident enters the lift. Within the given set time, the resident can only activate the floor related with the resident's indoor station address, while other floor no. will not be activated all the time.

Fig. 02-56

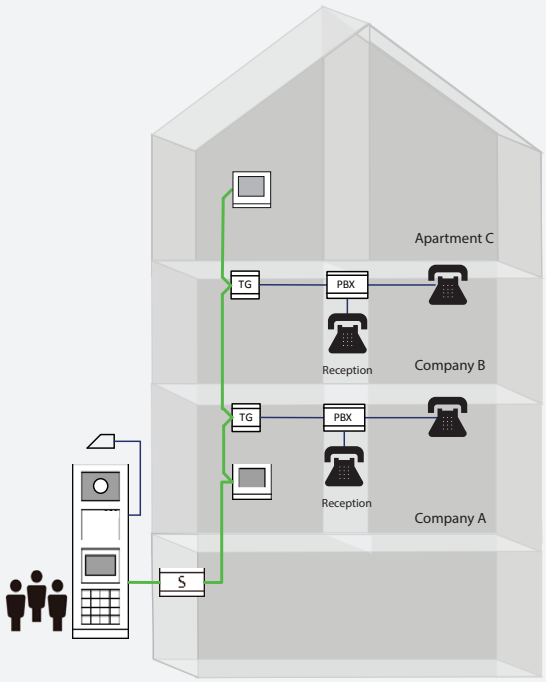

Fig. 02-57-1

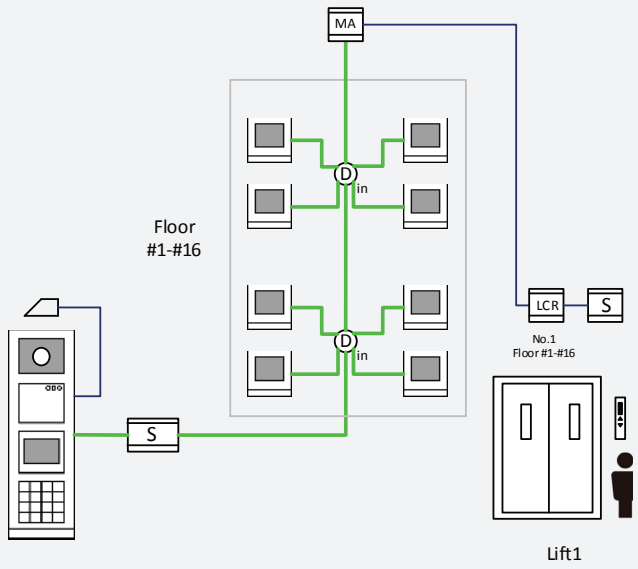

High building (more than 16 floors) with one lift Fig. 02-57-2

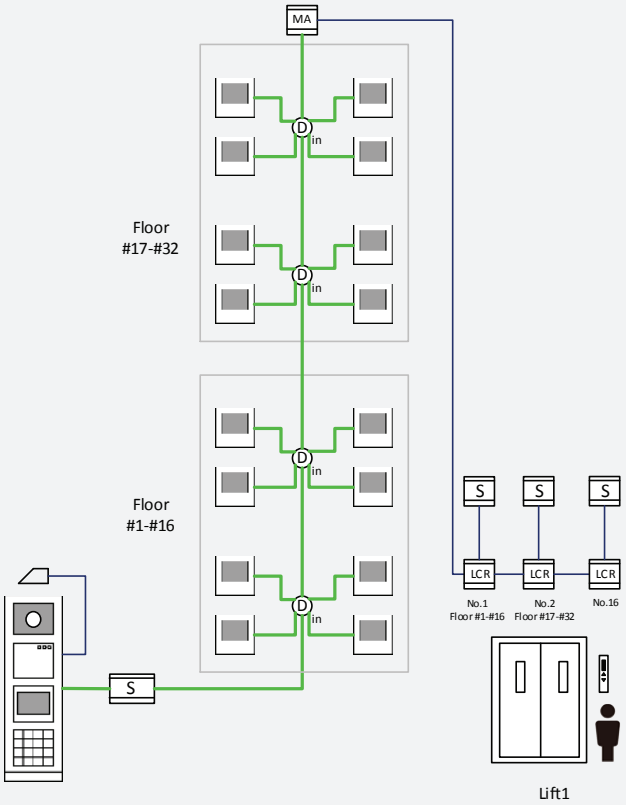

High building (more than 16 floors) with two lifts Fig. 02-57-3

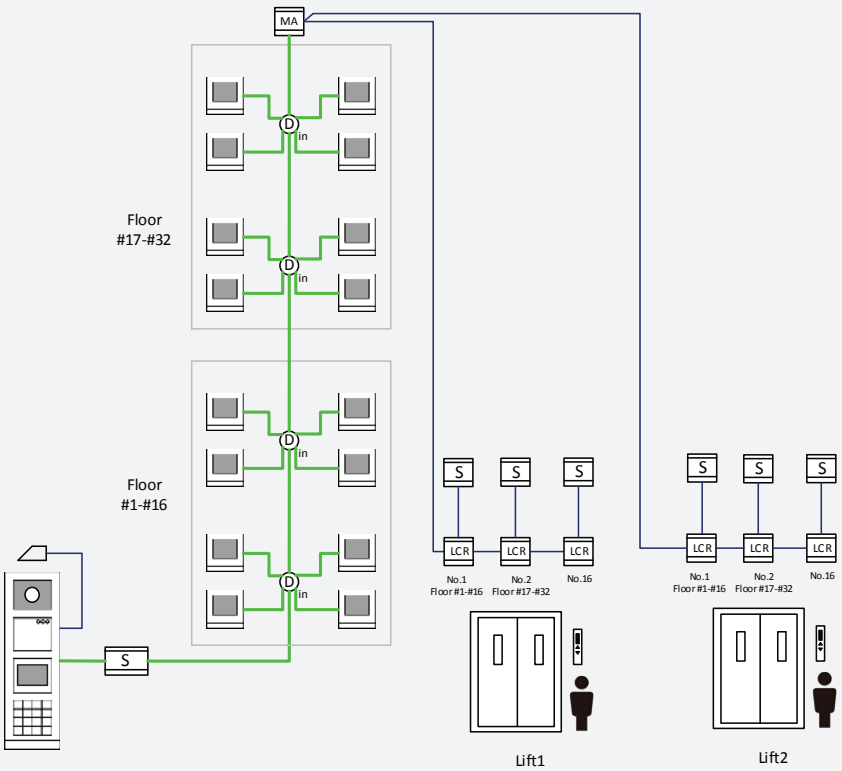

High building (more than 16 floors) with four lifts

Fig. 02-57-4

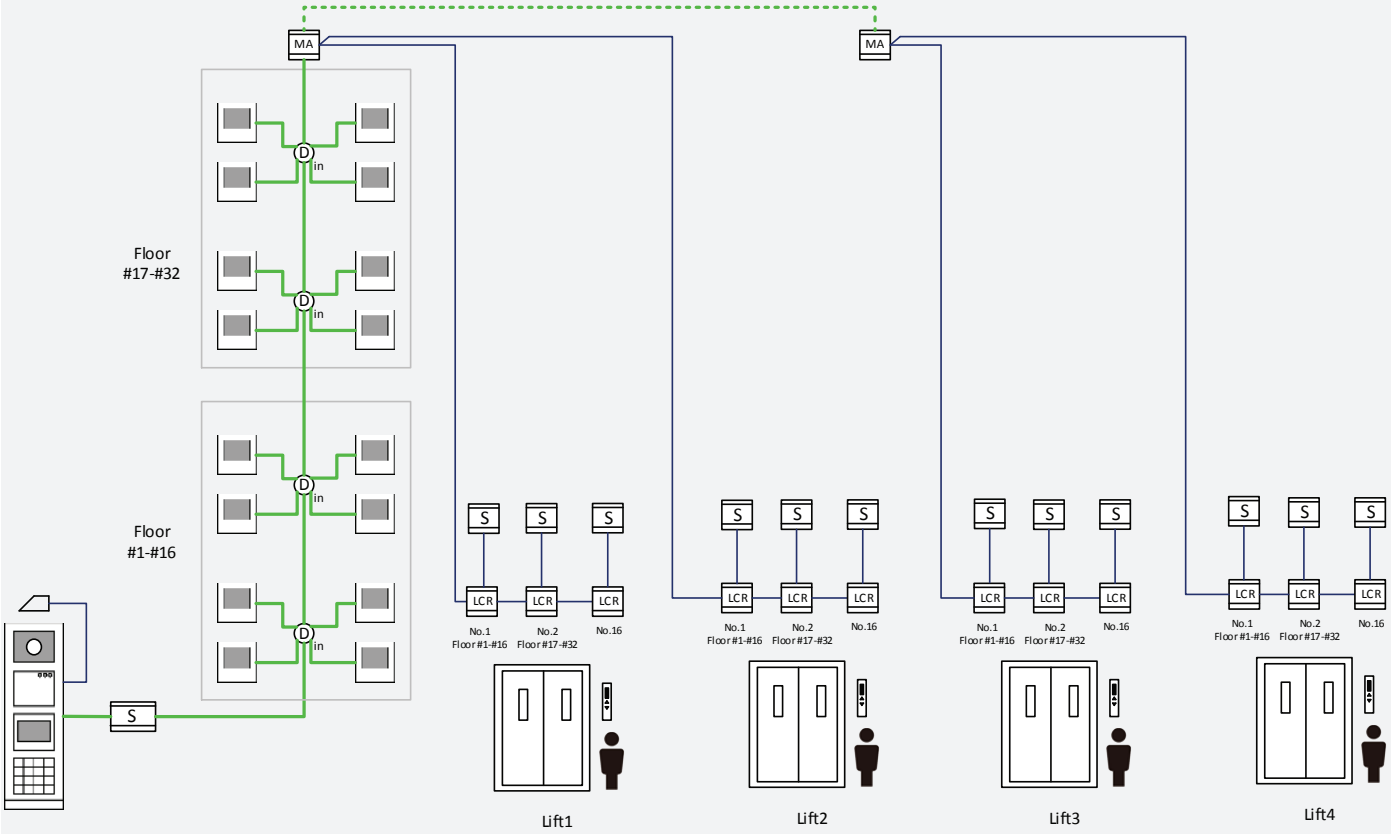

2.5 System topology

For any insulated system, there are 2 kinds of connections to make the topology – loop through connection and branch connection (node branch or branch with video distributor). In actual project there will be more than one topology for the same.

Topology of the external bus

For external bus, if there is more than one outdoor station or system devices in the insulated system, several items should be considered when planning system topology:

- For audio system, if there is more than one outdoor station, the outdoor station can be looped through the device or node branch. Fig. 02-58
- For video system, if there is more than one outdoor station (audio/video), the outdoor video distributor is needed for a cascading connection for parallel outdoor station. By cascading connection, the distance calculation for external bus line is between the longest parallel outdoor station and system controller, rather the total of the distance of each parallel outdoor station. Fig. 02-59

Fig. 02-58

Topology audio outdoor stations in a audio system

Loop though of outdoor station in audio system

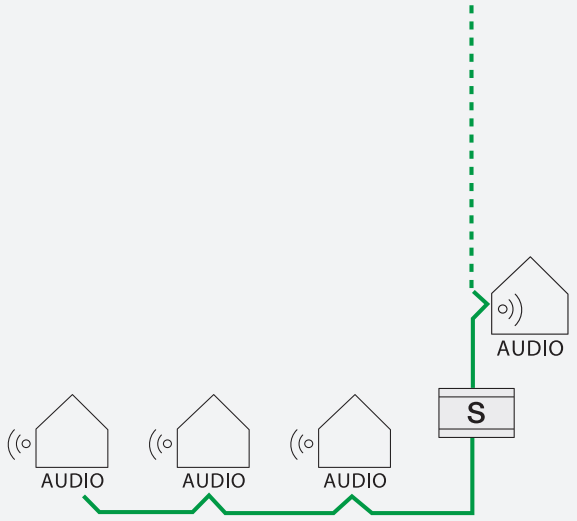

Node branch of outdoor station in audio system

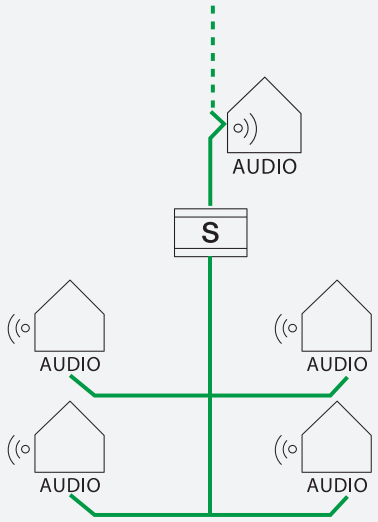

Fig. 02-59

Topology video outdoor stations in a video system

3 level cascading connection for 8 outdoor stations with outdoor distributor

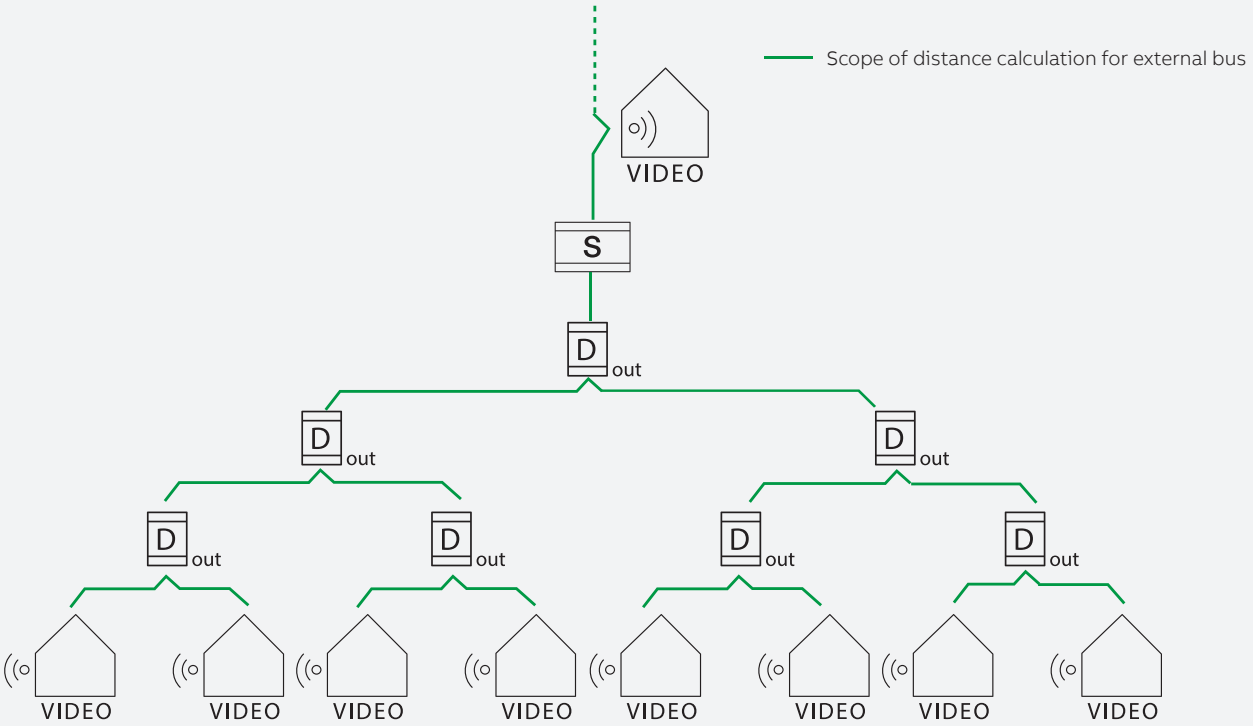

Topology of the internal bus

For internal bus, the RC rule needs to be considered when making the topology.
Consider the following when planning system topology:

Topology	RC rule if in audio system	RC rule if in video system	Can be used in building part?	Can be used in common part?	Advantages	Note
Looping through the indoor station	RC=OFF in all the devices Fig. 02-60	RC=ON in the last device RC=OFF in all other devices Fig. 02-61	YES	NO	- Good for low rise building and parallel indoor stations - Future proof even upgrading from audio system into video system - Cost and power effective without video distributor	- When the BUS terminals of one indoor station which is in the middle of building is not well fixed, the rest of the indoor stations will not work - The diameter of the cable is recommended no less than Ø=0.6mm
Looping through the node (branch line/stub line)	RC=OFF in all the devices Fig. 02-62	-	YES	NO	- Flexible wiring, "star shaped" is allowed - Cost effective for audio system, no distributor is needed	Each node should be changed into video distributor if upgrading into video system
Looping through the video distributor (branchh line/ stub line)	RC=OFF in all the devices	RC=ON in the last device of each stub line and at the end of the riser main and RC=OFF in all other devices Fig. 02-63	YES	YES	- It will have longer distance compared to looping the same quantity of gateway or indoor station, especially when parallel indoor stations are looped within the apartment - When one of the branch does not work, it will not impact the others - Allow the parallel bus lines	The total cable length should be less than 800 meters, this might not be enough in a big residential complex. Auxiliary power supply can be used to split the common part from one system controller into several system controllers
looping through the gateway	RC=OFF in all the devices Fig. 02-64	RC=ON in the last device RC=OFF in all other devices Fig. 02-65	YES	YES	Long distance when the looping quantities are less (for example≤8), which is good for residential complex	When as building gateway in the residential complex, the distance will not be long enough when with many looping quantities

Remarks: In actual project, the combination of different topologies will be used to maximize the advantage while to avoid the constraint of each topology.
See Fig. 02-66 Fig. 02-67 Fig. 02-68 for RC rule.

Fig. 02-60

Looping through the indoor station in audio system

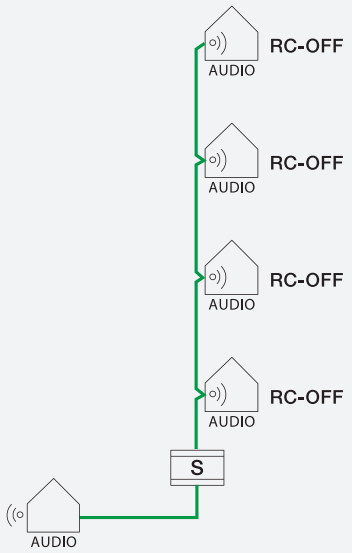

Fig. 02-61

Looping through the indoor station in video system

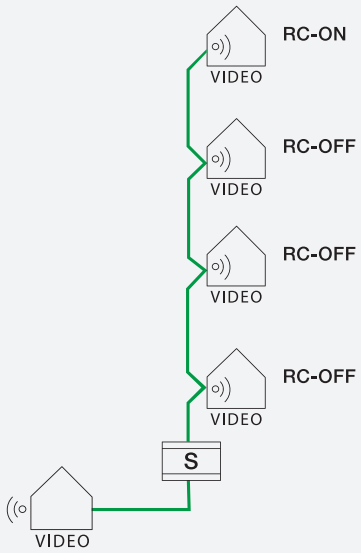

Fig. 02-62

Looping through the node (branch line/stub line)

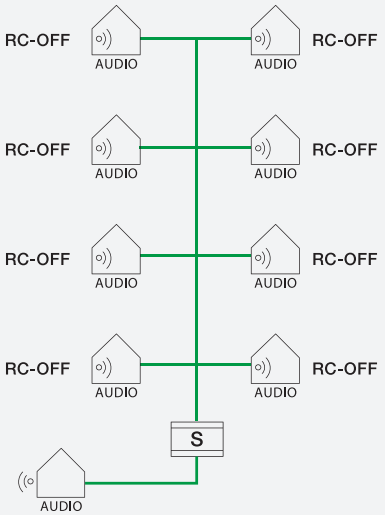

Fig. 02-63

Looping through the distributor (branch line/stub line)

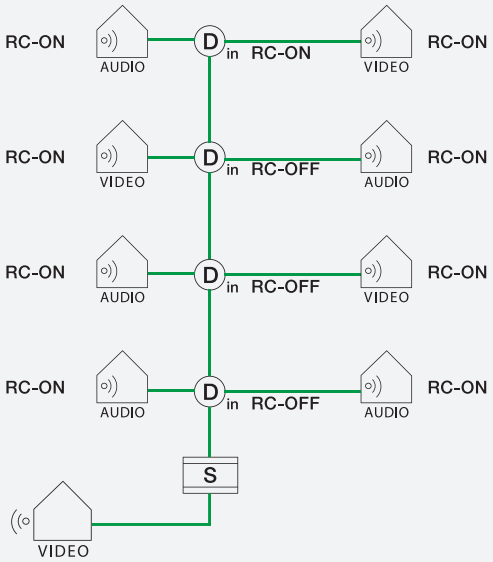

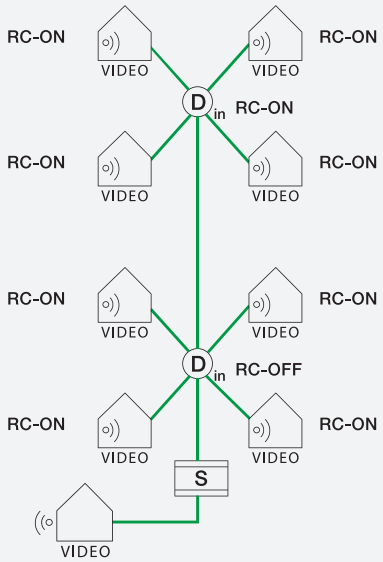

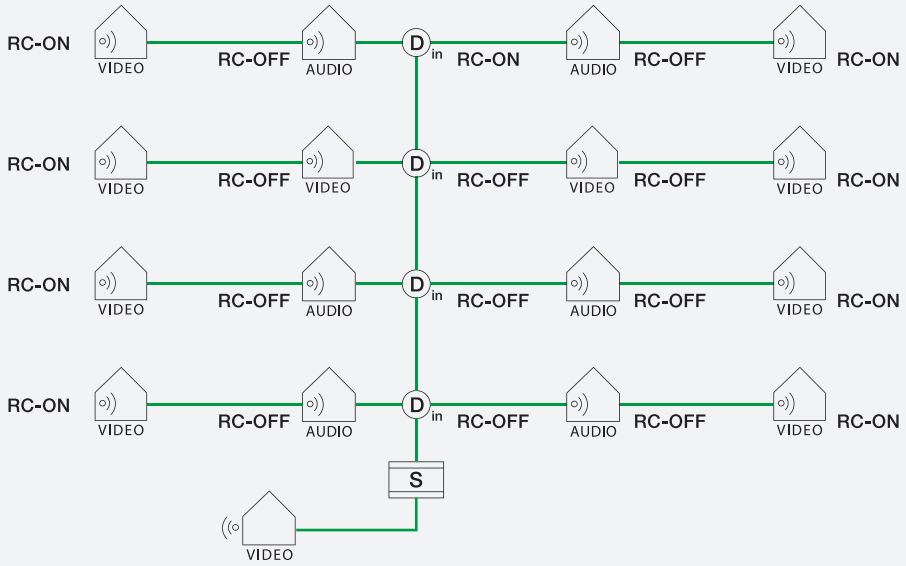

Fig. 02-64

Looping through the gateway in audio system

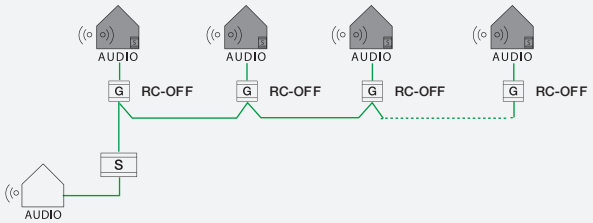

Fig. 02-66

Looping through the gateway in video system

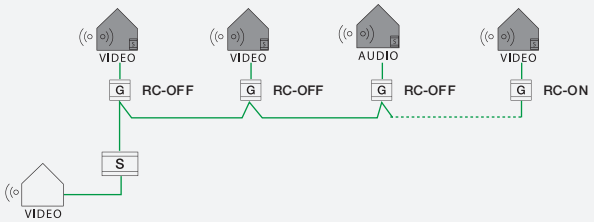

Fig. 02-65

In audio system
Looping through the video distributor with each distributor branching into 4 lines. The terminal resistor must be set as "OFF," to all gateways and distributors

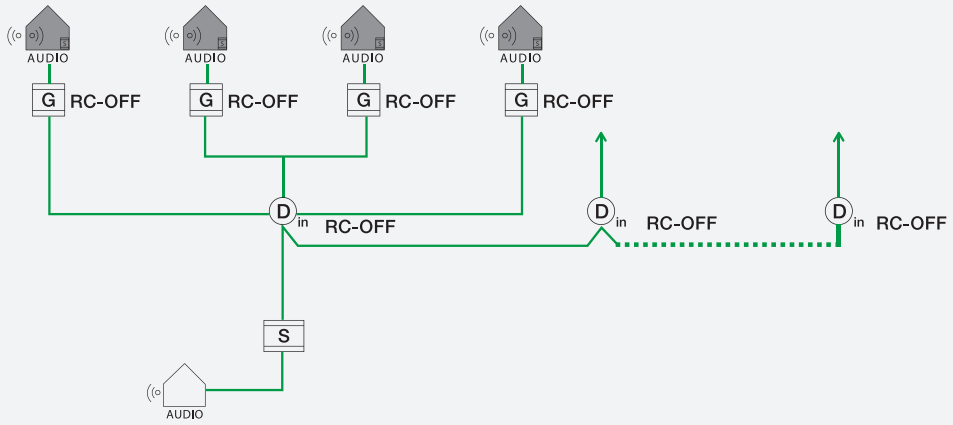

Fig. 02-67

In video system
Looping through the video distributor with each distributor branching into 4 lines. The terminal resistor must be set as "ON" on the last gateway each stub line and at the end of last distributor

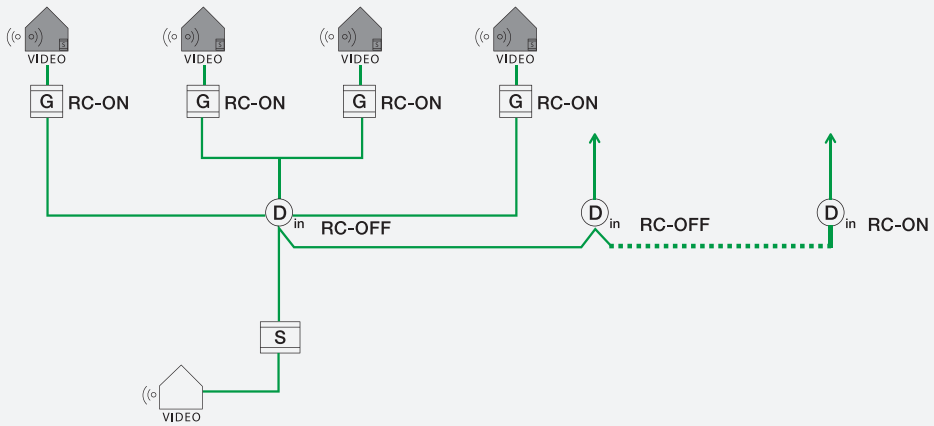

Fig. 02-68

Looping through gateway as auxiliary power supply. Each distributor is connected to branching into 4 lines. Each line loops through the building gateway.

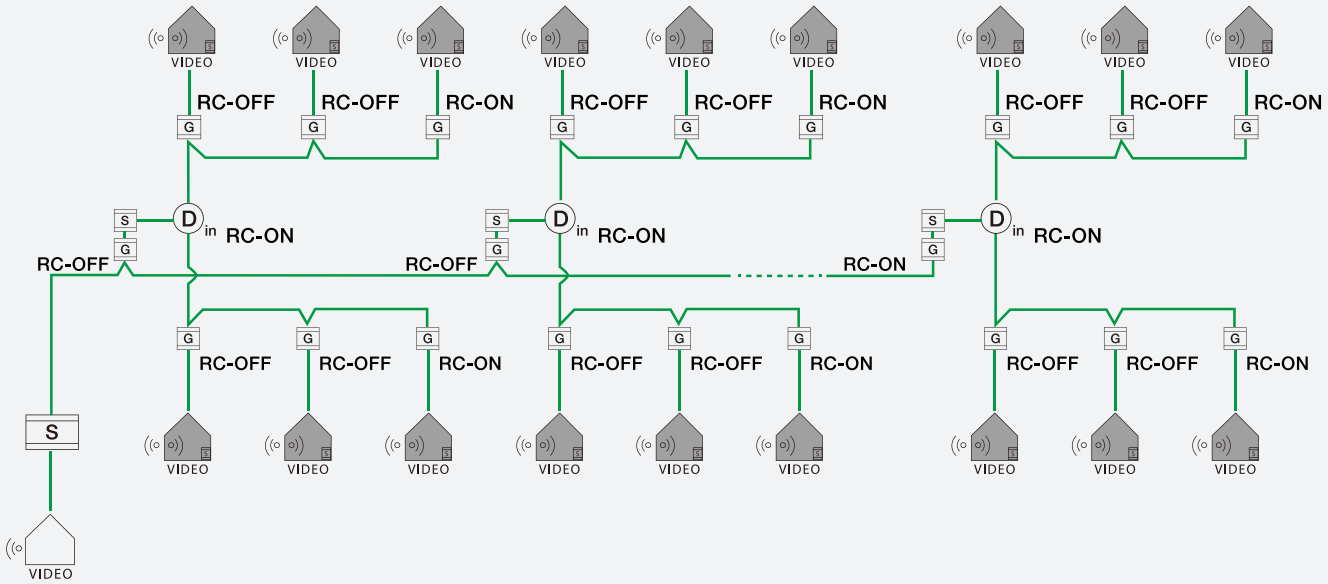

Topology for special applications

Welcome is a flexible system for many special applications. For some cases, by allocating all the devices in a certain topology will address limitations such as the power consumer and distance.

For example, for a big villa, more than 1 video outdoor stations are needed, more than 4 pcs 7" video indoor stations are required, and dedicated intercom (one room can call the dedicated room, while all the rest keep idle), then the topology can be made as the illustration. Fig. 02-69

In some cases, for example the pushbutton modules of outdoor station need to be installed at a lower place for wheelchair users, or be installed separately with audio outdoor station for renovation from audio system to video system, it can make topology like the illustration. Fig. 02-70

However, it must be noted that the maximum distance of the cable from camera modules to audio module is only 10 m.

Fig. 02-69

Topology of a big villa with 12 7" hands-free indoor stations

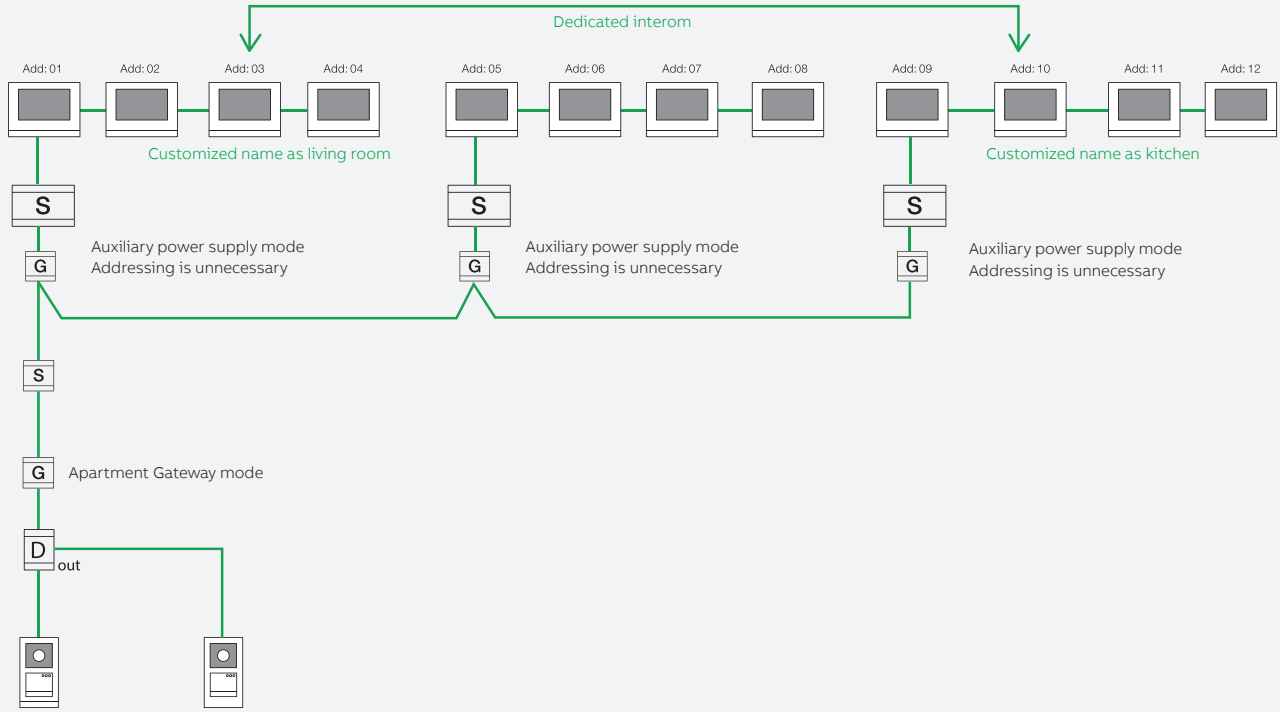

Remarks: Special software should be supplied for both gateway and 7", please contact your installer for this application

Fig. 02-70

Special application of camera module

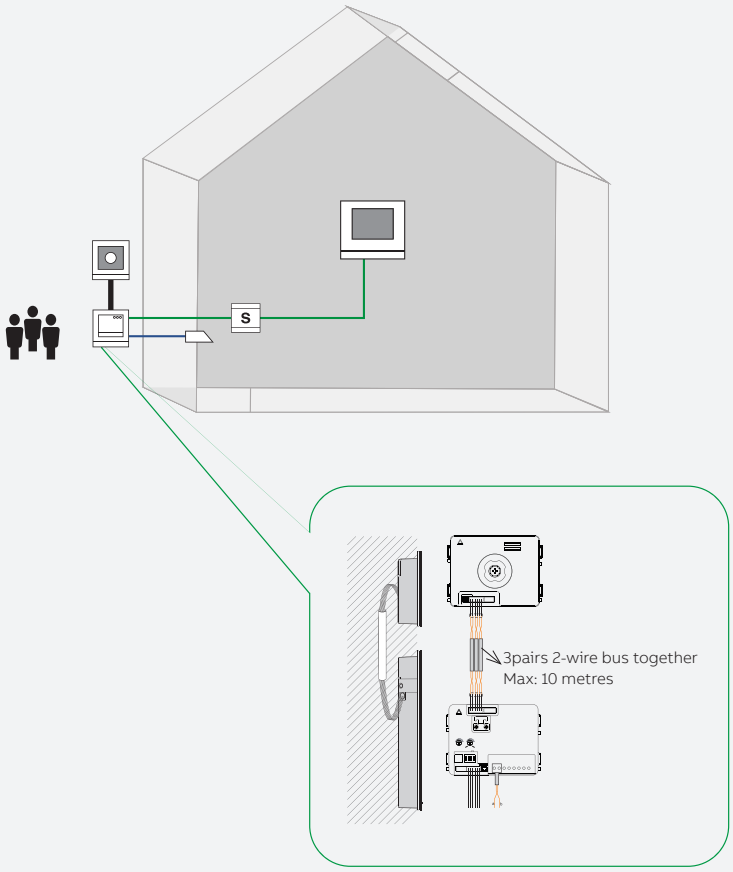

2.6 Power consumer and distance calculation to an insulated system of ABB-Welcome system

The set up of a Welcome system needs to calculate both the power consumer and distance.
Based on the table 1 and table 2, installers can plan for all types of projects by following the process below:

Fig. 02-71

Process of power consumer and distance calculation

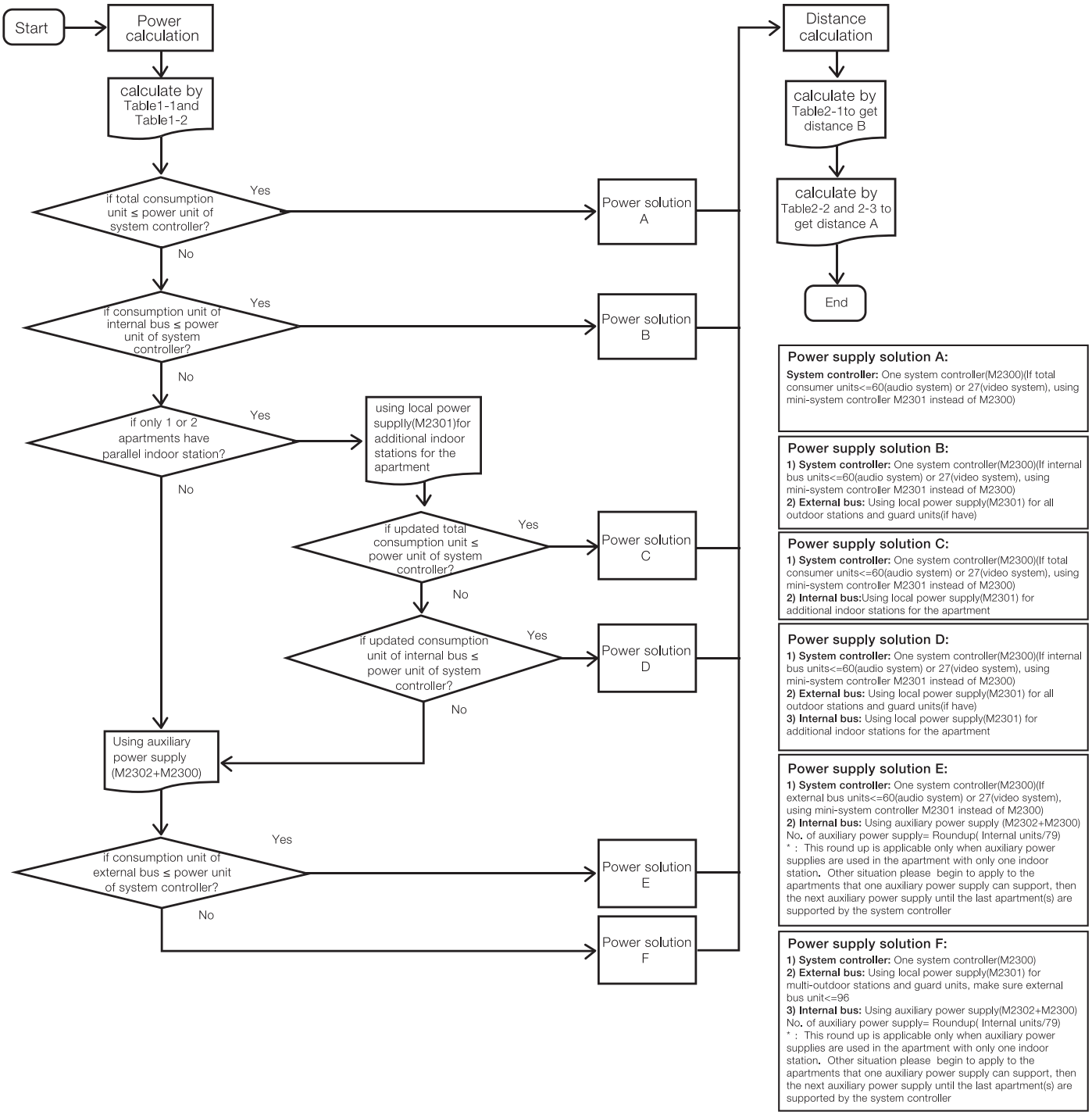

Table 1-1: Power consumer calculation& attenuation unit

Note: All below consumer and distance calculation is based on each insulated system

Device	Number (n)	Consumer unit (c)	n x c	Attenuation unit (a)	n x a
External bus - Outdoor station					
Camera module		6 or 0*		-	
Audio module (0/1/2-row button)		14 or 0*		-	
Pushbutton module (3-row or 4-row)		1 or 0*		-	
Round pushbutton module		1 or 0*		-	
Round pushbutton module with NFC/IC		5 or 0*		-	
Keypad module		2 or 0*		-	
Display module (ID or IC)		20 or 0*		-	
Nameplate module		1 or 0*		-	
Audio integration unit		2		-	
Extension unit		2		-	
Camera integration unit		6		-	
Mini outdoor station		20		-	
External bus - System device					
Outdoor distributor	**	0		15	
Gateway		5		-	
Gateway (line amplifier mode)		5		-	
Guard unit		15 or 0*		1	
Camera interface		4		1.5	
Switch actuator		6		1	
Total consumer units for external bus					
Internal bus-Indoor station					
Audio handset or audio hands-free (no additional consumer unit for parallel indoor stations in audio system)		1		1 or 0***	
4.3" handset or 4.3" hands-free (additional consumer unit should be counted in parallel indoor stations) Fig. 02-72		1or 0*		1 or 0***	
7" hands-free (additional consumer unit should be counted in parallel indoor stations)		17		1 or 0***	
Additional consumer unit in case parallel 4.3" or 4.3" and audio in video system (Only consider the apartment with max. parallel indoor staions, the system controller is set as "one on.")		11 or 0*		1	
Additional consumer unit in case parallel 4.3" or 4.3" and audio in video system (Only consider the apartment with max. parallel indoor staions, the system controller is set as "all on.")		23 or 0*		1	
Additional consumer unit in case parallel 7" or 7" and other indoor stations in video system (Only consider the apartment with max. parallel indoor staions.)		17		1	
Attenuation unit for the indoor stations.	****			1	
Internal bus-System device					
Video distributor		1		2	
Gateway		2		1.5	
Gateway (line amplifier mode)		5		-	
Guard unit		15 or 0*		1	
Switch actuator		6		1	
Camera interface		4		1.5	
Telephone gateway		1		1	
IP-Gateway		17		1	
M adaptor (two functions: PC adaptor and lift control module)		2		1	
Lift control relay module		Locally powered		-	
Total consumer units for internal bus					B = Max. distance from system controller to the furthest indoor station
	Total consumer units		Total consumer units		A = Max. distance from outdoor station to the furthest indoor station

	Insulated system with indoor stations				Insulated system without indoor stations (e.g common part or auxiliary power supply for OS)	
	1 apartment		>=2 apartments			
	Audio	Video	Audio	Video	Audio	Video
Power supply						
System controller	<=127		<=96		<=127	
Mini system controller	<=72	<=58	<=60	<=27	<=72	<=58
Auxiliary power supply						
System controller for auxiliary	<=127		<=84		<=127	
Mini system controller for auxiliary	<=72	<=58	<=65	<=43	<=72	<=58

Note:
* When the device is powered by local power supply, the value of consumer unit=0. See example.3 for application.
** The number counted for the attenuation is based on how many levels so to achieve the least attenuation. For example 4 outdoor stations, 3 outdoor distributors, but only 2 levels are counted.
*** When looping the indoor stations, attenuation unit=1, when branching the indoor station through the distributor, attenuation=0

Fig. 02-72 **Parallel 4.3" indoor stations or 4.3" and audio in video system, the system controller is set as "one on"**

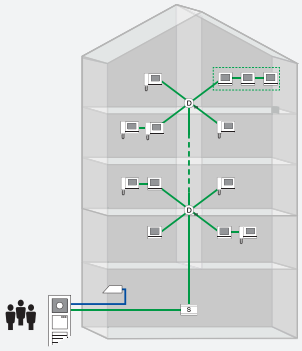

Note:
Use apartment with maximum outdoor stations when making power consumer calculations.
For the illustrated figure, the value of the additional quantity that should be counted is 2.

Fig. 02-73

Distance calculation

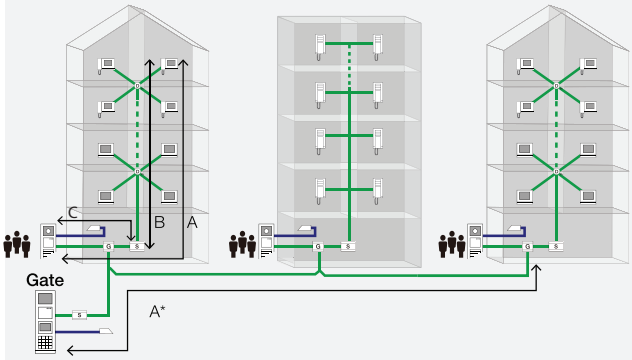

A: The distance from outdoor station to the furthest indoor station (Table 2-2)
A*:The distance from outdoor station to the furthest gateway (Table 2-3)
B: The distance from system controller to the furthest indoor station (Table 2-1)
C: The distance from system controller to the outdoor station, calculation is based on total power unit of external bus (Table 2-1)

B: Max. distance from system controller to the furthest indoor station, calculation is based on total power unit of internal bus (check Table1)
C: Max. distance from system controller to the outdoor station, calculation is based on total power unit of external bus (check Table1)

Table 2-1: Distance calculation for different cables (distance B/distance C) **unit:m**

Cable	Coax, 75-5 Ø=0.75 mm, 0.45 mm²		RVV, Ø=1 mm, 2 x 0.75 mm²		J-Y(ST)-Y, Ø=0.8 mm, 2 x 0.5 mm²		J-Y(ST)-Y, Ø=0.6 mm, 2 x 0.28 mm²		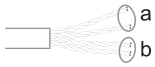 UTP 5, 2 x Two pairs, each core Ø=0.5 mm 8 x 0.2 mm²	
Power consumer units	**Video system**	**Audio system**	**Video system**	**Audio system**	**Video system**	**Audio system**	**Video system**	**Audio system**	**Video system**	**Audio system**
1-4	370	600	350	570	230	370	130	200	360	580
5-8	340	570	320	540	210	350	120	190	330	550
9-12	310	540	300	510	200	340	110	190	300	520
13-16	290	480	270	450	180	300	100	170	280	460
17-20	270	430	260	400	170	270	100	150	260	410
21-24	250	390	240	370	160	240	90	140	240	370
25-28	240	350	230	330	150	220	80	130	230	340
29-32	230	330	210	310	140	200	80	120	220	310
33-36	210	300	200	280	130	190	80	110	210	290
37-40	200	280	190	260	130	180	70	100	200	270
41-44	190	260	180	250	120	170	70	90	190	250
45-48	190	250	170	230	120	160	70	90	180	240
49-52	180	230	170	220	110	150	60	80	170	220
53-56	170	220	160	210	110	140	60	80	160	210
57-60	160	210	150	200	100	130	60	70	160	200
61-64	160	200	150	190	100	120	60	70	150	190
65-68	150	190	140	180	90	120	50	70	140	180
69-72	150	180	140	170	90	110	50	60	140	170
73-76	140	170	130	160	90	110	50	60	130	170
77-80	140	170	130	160	90	100	50	60	130	160
81-84	130	160	120	150	80	100	50	60	130	150
85-88	130	150	120	140	80	100	50	50	120	150
89-92	120	150	120	140	80	90	40	50	120	140
93-96	120	140	110	130	80	90	40	50	110	140

A: Max. distance from furthest outdoor station to furthest indoor station or gateway, calculation is based on the total attenuation unit (check Table 1); For audio system, the value of A is fixed **unit:m**

Cable	Coax, 75-5	RVV, Ø=1 mm	J-Y(ST)-Y,Ø=0.8 mm	J-Y(ST)-Y,Ø=0.6 mm	UTP 5, 2 x 2 pairs
	650	610	410	230	640

For Video system, the value of A varies due to differtent total attenuation unit from outdoor station to the last device

Table 2-2: Max distance from furthest outdoor station to furthest indoor station (distance A) **unit:m**

Cable	Coax, 75-5	RVV, Ø=1 mm	J-Y(ST)-Y,Ø=0.8 mm	J-Y(ST)-Y,Ø=0.6 mm	UTP 5, 2 x 2 pairs
Attenuation unit					
1-5	470	290	150	130	300
6-10	450	280	140	130	290
11-15	430	260	140	120	280
16-20	410	250	130	120	270
21-25	390	240	120	110	250
26-30	370	230	120	110	240
31-35	350	220	110	100	230
36-40	330	200	110	90	220
41-45	310	190	100	90	200
46-50	290	180	90	80	190
51-55	280	170	90	80	180
56-60	260	160	80	70	170
61-65	240	150	80	70	150
66-70	220	130	70	60	140

Table 2-3: Max distance from furthest outdoor station to furthest gateway (distance A*) **unit:m**

Attenuation unit	Coax, 75-5	RVV, Ø=1 mm	J-Y(ST)-Y,Ø=0.8 mm	J-Y(ST)-Y,Ø=0.6 mm	UTP 5, 2 x 2 pairs
1-5	310	190	100	90	200
6-10	290	180	90	80	190
11-15	280	170	90	80	180
16-20	260	160	80	70	170
21-25	240	150	80	70	150
26-30	220	130	70	60	140
31-35	200	120	60	60	130
36-40	180	110	60	50	120
41-45	160	100	50	50	100
46-50	140	90	40	40	90
51-55	120	70	40	30	80
56-60	100	60	30	30	70
61-65	80	50	30	20	50
66-70	60	40	20	20	40

Sample project 1: Big single family home with 3 outdoor stations

One big villa with 3 outdoor stations all with one 1 button. First one is video with display as reader, second one as video with keypad, without display, third one is audio only, inside the apartment, 1 x 7", and 1 audio handset. All on mode with branch line connection by a video distributor. The cable will use RVV, Ø=1 mm. The distance is around 200 meters from outdoor station to the 7".

Device	Number (n)	Consumer unit (c)	n x c	Attenuation unit (a)	n x a	Distance based on RVV, Ø=1 mm, check Table 2
External Bus--Outdoor Station						
Camera module	2	6	12	-	-	
Audio module (0/1/2-row button)	3	14	42	-	-	
Keypad module	1	2	2	-	-	
Display module (ID or IC)	1	20	20	-	-	
External Bus--System Device						
Outdoor distributor	2	-	-	15	30	
Total consumer units for external bus			**76**			
Internal Bus--Indoor Station						
Audio handset	1	1	1	1	1	
7" handsfree	1	17	17	1	1	
Additional consumer unit in case parallel 7" indoor stations or 7" and 4.3" or 7" and audio in video system (Only consider the apartment with max. parallel indoor stations)	1	17	17	0	-	
Total consumer units for internal bus			**35**			**B= (max. distance from system controller to the furthest indoor station.)** **200 m**
Total consumer units			**111**	**Total attenuation units**	**32**	**A= (max. distance from outdoor station to the furthest indoor station.)** **220 m**
System controller in video system. Total consumer units<=127						
Conclusion: The power consumption is OK with one system controller. The max distance from outdoor station is 220 m, so the distance is also OK.						

Fig. 02-74

Big single family home with 3 outdoor stations

- System type: audio/video combined
- Wiring: looping through
- Devices used:
- Two camera modules
- Three audio modules
- One keypad module
- One display module
- Two cover frames, size 1/3
- One cover frame, size 1/1
- Two flush-mounted boxes, size 1/3
- One flush-mounted box, size 1/1
- Two outdoor distributors
- One system controller
- One 7" video hands-free indoor station
- One audio handset indoor station
- Three electric door openers (not provided by ABB)
  The power consumption is fine with one system controller. The max distance from outdoor station is 220 m, so the distance is also OK without amplifier

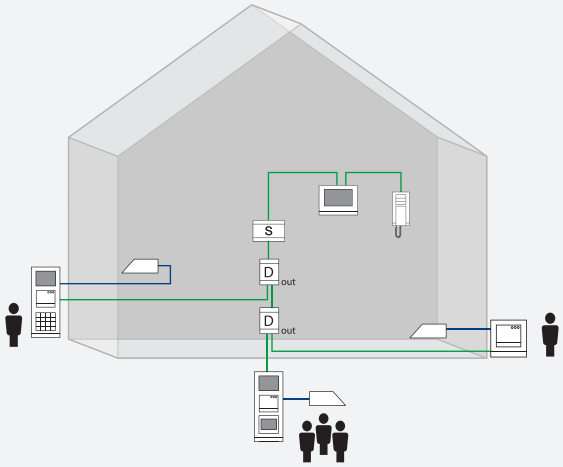

Sample project 2: condominium with 12 apartments

One keypad OS (display is included+4pcs name plate modules) with 12 apartments, 10 apartments with 3 pcs 4.3" in each apartment and 2 apartments with 1 audio handset per apartment, one standard system controller under "one on" working mode. Branch line connection with 3pcs of video distributor (4 apartments per distributor). Cable will use J-Y(ST)-Y,Ø=0.6 mm. The cable run will be around 100m from outdoor station to last indoor station.

Device	Number (n)	Consumer unit (c)	n x c	Attenuation unit (a)	n x a	Distance based on J-Y(ST)-Y,Ø=0.6 mm, check Table 2	
External Bus--Outdoor Station							
Camera module	1	6	6	-	-		
Audio module (0/1/2-row button)	1	14	14	-	-		
Keypad module	1	2	2	-	-		
Display module (ID or IC)	1	20	20	-	-		
Nameplate module	4	1	4	-	-		
Total consumer units for external bus			**46**				
Internal Bus--Indoor Station							
Audio handset	2	1	2	0	0		
4.3" handset & hands-free	30	1	30	0	0		
Additional consumer unit in case parallel 4.3" indoor stations or 4.3" and audio in video system (Only consider the apartment with max. parallel indoor stations), the system controller is set as "one on"	2	11	22	1	2		
Internal Bus--System Devices							
Video distributor	3	1	3	2	6		
Total consumer units for internal bus			**57**			**B= (max. distance from system controller to the furthest indoor station)**	**60 m**
Total consumer units			**103**	**Total attenuation units**	**8**	**A= (max. distance from outdoor station to the furthest indoor station)**	**130 m**
One standard system controller in video system. Total consumer units<=96							
Conclusion: The power consumption 96<103, so one standard system controller is not enough, and the distance is OK.							

Solution: The outdoor station is locally powered by one mini system controller

Device	Number (n)	Consumer unit (c)	n x c	Attenuation unit (a)	n x a	Distance based on J-Y(ST)-Y,Ø=0.6 mm, check Table 2	
External Bus--Outdoor Station							
Camera module	1	0	0	-	-		
Audio module (0/1/2-row button)	1	0	0	-	-		
Keypad moduleNameplate module	1	0	0	-	-		
Display module (ID or IC)	1	0	0	-	-		
Nameplate module	4	0	0	-	-		
Total consumer units for external bus			**0**				
Internal Bus--Indoor Station							
Audio handset	2	1	2	0	0		
4.3" handset & hands-free	30	1	30	0	0		
Additional consumer unit in case parallel 4.3" indoor stations or 4.3" and audio in video system (Only consider the apartment with max. parallel indoor stations), the system controller is set as "one on"	2	11	22	1	2		
Internal Bus--System Devices							
Video distributor	3	1	3	2	6		
Total consumer units for internal bus			**57**			**B= (max. distance from system controller to the furthest indoor station)**	**60 m**
Total consumer units			**57**	**Total attenuation units**	**8**	**A= (max. distance from outdoor station to the furthest indoor station)**	**130 m**
One standard system controller in video system. Total consumer units<=96							

Conclusion: The power consumption is OK with this solution.
The max. distance from outdoor station is 130 m, so the distance is also OK.

Fig. 02-75

Condominium with 12 apartments

- System type: audio/video combined
- Wiring: branch line by distributor connection
- Devices used:
- One camera module
- One audio module
- One keypad module
- Four nameplate modules
- One cover frame, size 2/4
- One flush-mounted box, size 2/4
- One system controller
- One mini system controller
- Three video distributors
- Thirty 4.3" video hands-free indoor stations
- Two audio handset indoor stations
- One electric door opener (not provided by ABB)

One standard system controller is not enough; need to add a local power supply for outdoor station.

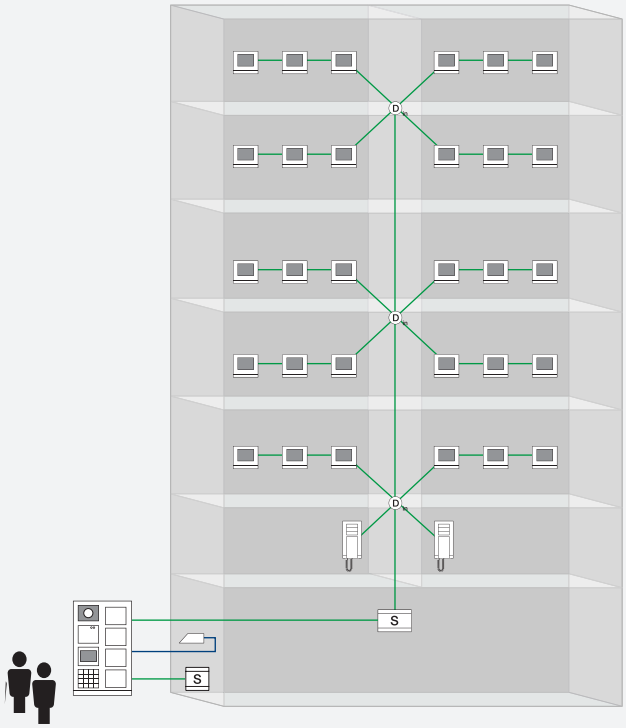

Sample project 3: Condominium with 3 outdoor stations and 12 apartments

1 building with 3 video pushbutton outdoor stations of 12 apartments, each apartment is equipped with 3 x 4.3" video hands-free indoor stations, all the screens should be turned on in case being called from outdoor station. The topology is going to be looping the video distributor with one supporting 2 apartments in which looping the indoor station will be used.The cable will use J-Y(ST)-Y,Ø=0.6 mm. The cable run will be around 40 m from outdoor station to system controller, and 40m from system controller to last indoor station.

Device	Number (n)	Consumer unit (c)	n x c	Attenuation unit (a)	n x a	Distance based on J-Y(ST)-Y,Ø=0.6 mm, check Table 2	
External Bus--Outdoor Station							
Camera module	3	6	18	-	-		
Audio module (0/1/2-row button)	3	14	42	-	-		
Pushbutton module (3-row or	12	1	12	-	-		
4-row)**External Bus--System device**							
Outdoor distributor	2	-	-	15	30		
Total consumer units for external bus			**72**				
Internal Bus--Indoor Station							
4.3" handset & hands-free	36	1	36	0	0		
Additional consumer unit in case parallel 4.3" indoor stations or 4.3" and audio in video system (Only consider the apartment with max. parallel indoor stations), the system controller is set as "all on."	2	23	46	1	2		
Internal Bus--System Devices							
Video distributor	6	1	6	2	12		
Total consumer units for internal bus			**88**			**B= (max. distance from system controller to the furthest indoor station)**	**50 m**
Total consumer units			**160**	**Total attenuation units**	**44**	**A= (max. distance from outdoor station to the furthest indoor station)**	**90 m**
One standard system controller in video system. Total consumer units<=96							
Conclusion: The power consumption 96<160, so one standard system controller is not enough, and the distance is OK.							

Solution: Each of the outdoor stations are locally powered by one mini system controller

Device	Number (n)	Consumer unit (c)	n x c	Attenuation unit (a)	n x a	Distance based on J-Y(ST)-Y,Ø=0.6 mm, check Table 2	
External Bus--Outdoor Station							
Camera module	3	0	0	-	-		
Audio module (0/1/2-row button)	3	0	0	-	-		
Push button module (3-row or	12	0	0	-	-		
4-row)**External Bus--System device**							
Outdoor distributor	2	-	-	15	30		
Total consumer units for external bus			**0**				
Internal Bus--Indoor Station							
4.3" handset & hands-free	36	1	36	0	0		
Additional consumer unit in case parallel 4.3" indoor stations or 4.3" and audio in video system (Only consider the apartment with max. parallel indoor stations), the system controller is set as "all on."	2	23	46	1	2		
Internal Bus--System Devices							
Video distributor	6	1	6	2	12		
Total consumer units for internal bus			**88**			**B= (max. distance from system controller to the furthest indoor station)**	**50 m**
Total consumer units			**88**	**Total attenuation units**	**44**	**A= (max. distance from outdoor station to the furthest indoor station)**	**90 m**
One standard system controller in video system. Total consumer units<=96							
Conclusion: The power consumption 88<96, so one standard system controller plus 3 local power supply are enough, the distance is also OK.							

Fig. 02-76

Condominium with 3 outdoor station and 12 apartments

- System type: video
- Wiring: branch line by distributor connection
- Devices used
- Three camera modules
- Three audio modules
- Twelve button module, 3/6 pushbutton
- Three cover frames, size 2/3
- Three flush-mounted boxes, size 2/3
- Outdoor distributors
- One system controller
- Three mini system controllers
- Six video distributors
- Thirty six 4.3" video hands-free indoor stations
- Three electric door openers (not provided by ABB)

One standard system controller is not enough, and distance is OK; need to add a local power supply for each outdoor station.

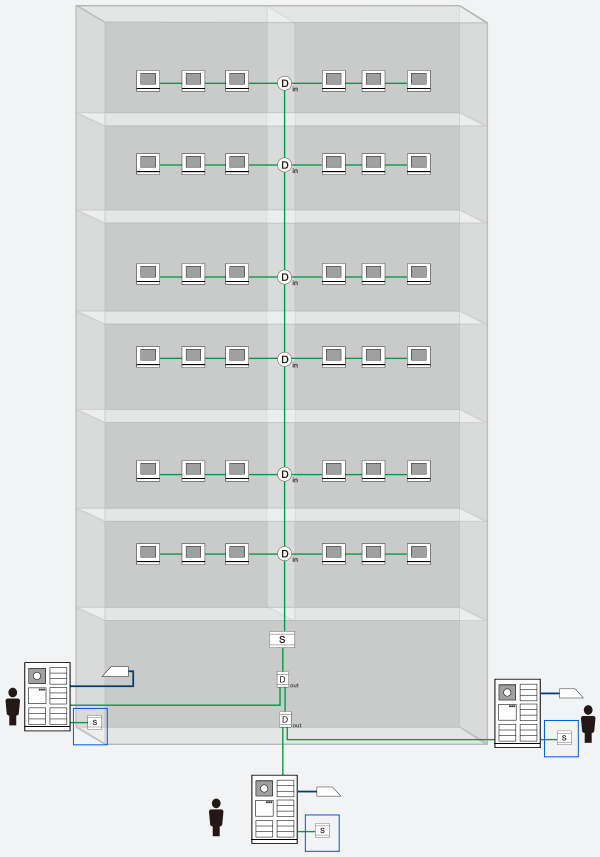

Sample project 4: residential complex with 4 entrances

4 gate stations with keypad and display (ID card reader), 4 buildings are looped with building gateway together with 1 guard unit, the system controller is used to feed all the above products in the common part. The max. distance from gate station to last building is around 250 m. RVV, Ø=1 mm, is going to be used.

Analysis: The network system involves 5 insulated systems: 4 buildings and one in the common part. Each insulated system should be evaluated respectively. Only the insulated system in the common part will be exemplified.

Device	Number (n)	Consumer unit (c)	n x c	Attenuation unit (a)	n x a	Distance based on RVV, Ø=1 mm check Table 2
External Bus--Outdoor Station						
Camera module	4	6	24	-	-	
Audio module (0/1/2-row button)	4	14	56	-	-	
Keypad module	4	2	8	-	-	
Display module (ID or IC)	4	20	80	-	-	
External Bus--System device						
Outdoor distributor	2	-	-	15	30	
Total consumer units for external bus			**168**			
Internal Bus-System Devices						
Guard unit	1	15	15	1	1	
Gateway in the common part	4	2	8	1.5	6	
Total consumer units for internal bus			**23**			**B= Max. distance from system controller to the furthest building** **240 m**
Total consumer units			**191**	**Total attenuation units**	**37**	**A= (Max. distance from gate station to the furthest building) (check Table 2-3)** **110 m**
One standard system controller in video system. Total consumer units<=96						
Conclusion: The power consumption 191>96, so one standard system controller is not enough, and also the distance can not be met without amplifier						

Solution: Gate stations are powered by local power supply, only one gate station is counted to have the consumer units, one gateway as amplifier can be used in the first building

Device	Number (n)	Consumer unit (c)	n x c	Attenuation unit (a)	n x a	Distance based on RVV, Ø=1 mm check Table 2
External Bus--Outdoor Station						
Camera module	1	6	6	-	-	
Audio module (0/1/2-row button)	1	14	14	-	-	
Keypad module	1	2	2	-	-	
Display module (ID or IC)	1	20	20	-	-	
External Bus--System Device						
Outdoor distributor	2	-	-	15	30	
Total consumer units for external bus			**42**			
Internal Bus-System Device						
Guard unit	1	15	15	1	1	
			Total attenuation units for system controller		**31**	**A1=Max. distance from gate station to the added gateway (check Table 2-3)** **120 m**
Gateway (line amplifier mode)	1	5	5	-	-	
Gateway	4	2	8	1.5	6	
Total consumer units for internal bus			**28**			**B= (Max. distance from system controller to the furthest building (check Table 2-1)** **230 m**
Total consumer units			**70**	**Total attenuation units**	**6**	**A2=Max. distance from the added gateway to the furthest building (check Table 2-3)** **180 m**
One standard system controller in video system. Total consumer units<=96						
Conclusion: The power consumption 70<96, so one standard system controller plus 3 local power supplies are enough, the distance can be met by a line amplifier						

Fig. 02-77

Residential complex with 4 entrance

- System type: video
- Wiring: branch line by distributor connection
- Devices used (common part only)
- Four keypad outdoor stations, with ID card reader
- Four flush-mounted boxes, size 1/4
- Three outdoor distributors
- One guard unit
- One system controller
- Three mini system controllers
- Four electric door openers (not provided by ABB)

One standard system controller is not enough, and distance is a problem; need to add a local power supply for each outdoor station and a gateway in the internal bus of common part.

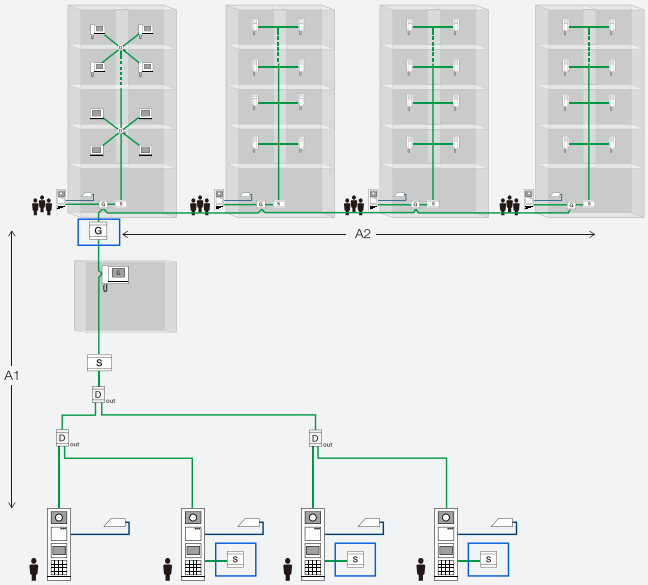

Sample project 5: high-rising building with 140 apartments

1 building with 2 video keypad outdoor station with display. The building has 140 apartments, with 110 apartments with one audio handset, and 28 with one 4.3" hands-freee indoor station, two last apartments with 2 x 4.3" hands-free indoor stations/apartment. For these 2 apartments, each are equipped with a second confirmed outdoor station before the private door. Whole system is branch line connection through distributor with each supporting 4 indoor stations. System controller is set under "all on" working mode. The cable will use RVV, Ø=1 mm, the distance from outdoor station to the furthest indoor station is estimated to be 150 m.

Analysis:
For the140 apartments, please check the "The mixed power solution for keypad outdoor station with display" to get an easy reference.
For the last 2 apartements equipped with 2 second-confirmed outdoor stations, apatment gateway should be used.

Step 1: For the 140 apartments, check the "The mixed power solution for keypad outdoor station with display"table
Divide the 140 apartments into four insulated systems, and "auxiliary power supply + gateway" is used for the last three insulated systems.

» 1st insulated system: 2 keypad outdoor stations with 3 gateways in the internal bus -- one standard system controller.

» 2nd insulated system: 62 apartments (62 pcs audio indoor stations) with 16 video distributors -- one standard auxiliary system controller.

» 3rd insulated system: 62 apartments (48 pcs audio indoor stations + 14 pcs 4.3" video handsfree indoor stations) with 16 video distributors -- one standard auxiliary system controller.

» 4th insulated system: 16 apartments (14 pcs 4.3" video handsfree indoor stations + last 2 apartment systems) with 4 video distributors -- one mini auxiliary system controller

For 1st insulated system:

Device	Number (n)	Consumer unit (c)	n x c	Attenuation unit (a)	n x a	Distance based on RVV, Ø=1 mm, check Table 2
External Bus--Outdoor Station						
Camera module	2	6	12	-	-	
Audio module (0/1/2-row button)	2	14	28	-	-	
Keypad module	2	2	4	-	-	
Display module(ID or IC)	2	20	40	-	-	
External Bus--System Device						
Outdoor distributor	1	-	-	15	15	
Total consumer units for external bus			**84**			
Internal Bus-System Device						
Gateway	3	2	6	1.5	4.5	
Total consumer units for internal bus			**6**			**B=Max. distance from system controller to the furthest gateway** **320 m**
Total consumer units			**90**	**Total attenuation units**	**19.5**	**A=Max. distance from outdoor station to the furthest gateway (check Table 2-3)** **160 m**
Mini system controller in video system. Total consumer units<=96						
Conclusion: The power consumption 90<96, so one standard system controller is OK, and distance is also OK.						

For 2nd/3rd/4th insulated systems, the value is OK according to Table "the mixed power solution for keypad outdoor station with display."

Step 2: For the 2 apartments with second-confirmed outdoor station, each is equipped with a mini system controller and apartment gateway.

Device	Number (n)	Consumer Unit (c)	n x c	Attenuation Unit (a)	n x a	Distance based on RVV, Ø=1 mm, Check Table 2
External Bus--Outdoor Station						
Camera module	1	6	6	-	-	
Audio module (0/1/2-row button)	1	14	14	-	-	
External Bus--System Device						
Gateway	1	5	5	-	-	
Total consumer units for external bus			**25**			
Internal Bus-Indoor Station						
4.3" handset & hands-free	2	1	2	1	2	
Additional consumer unit in case parallel 4.3" indoor stations or 4.3'"and audio in video system (Only consider the apartment with max. parallel indoor stations), the system controller is set as "all on"	1	23	23	1	1	
Total consumer units for internal bus			**25**			
Total consumer units			**50**			
Mini system controller in video system. Total consumer units<=58						
Conclusion: The power consumption 50<58, so one mini system controller for each of apartment with second-confirmed outdoor station is OK						

Fig. 02-78

High-rise building with 140 apartments

- System type: audio/video combined
- Wiring: branch line by distributor connection
- Devices used
- Two keypad outdoor stations
- Two flush-mounted boxes, size 1/4
- Two camera modules
- Two audio modules, 1/2 pushbutton
- Two cover frames, size 1/2
- Two flush-mounted boxes, size 1/2
- Thirty six video distributors
- One outdoor distributor
- Three system controllers
- Five gateways
- Three mini system controllers
- One hundred and ten audio handsets
- Thirty-two 4.3" video handsfree
- Four electric door openers (not provided by ABB)

It is OK to use one mini system controller for each of the apartment systems of the last 2 apartments with second confirmed outdoor station; distance is also OK.

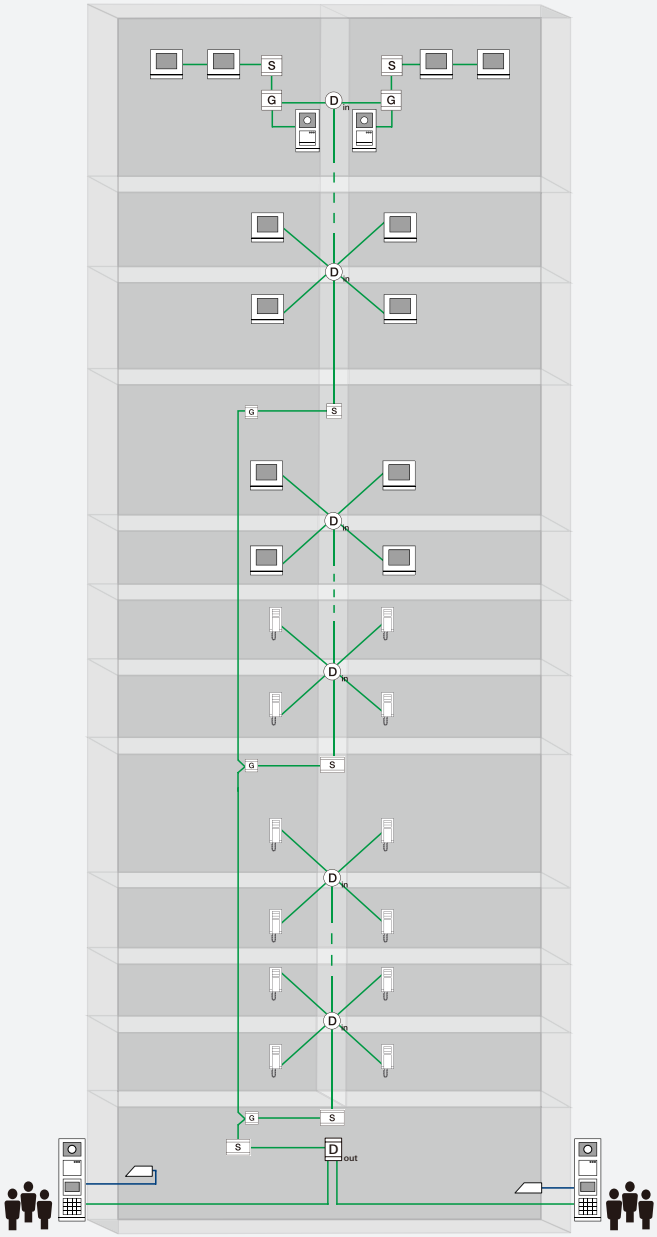

Rule to maximize the distance calculation in the common part

In the residential complexes, the actual distance from the gate station to the furthest gateway can be very long. So, by balancing the wiring topology and system total cable length, the combination of looping the gateway and looping the distributor together with auxiliary power supply in the common part can be used to maximize the distance calculation rule.

Fig. 02-79

Checking Table 2, if 3 gateways are looped through in the trunk of the common part, it can be allowed a maximum of 200 m (check Table 2-3) by UTP cable for A1 (3x1.5=4.5 units), and the max. cable distance from last gateway in auxiliary power supply in the trunk to the furthest building gateway of Area 6 with A2≤190m (check Table 2-3) of UTP cable (2+3x1.5=6.5 units).

Fig. 02-79

Rule to maximize the distance of cable

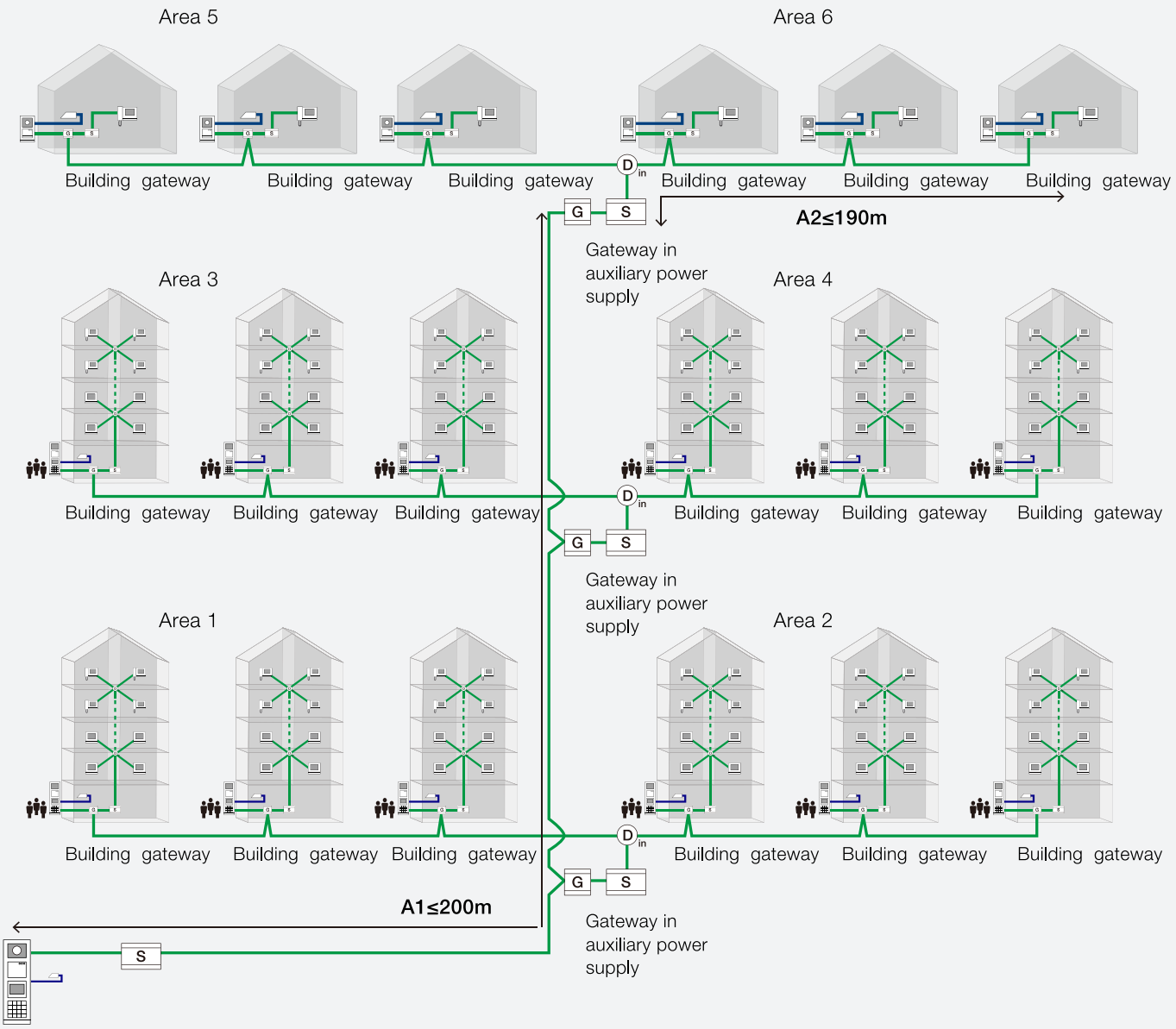

2.7 Easy reference for the modular outdoor station solution

The mixed power solution for pushbutton outdoor station

Indoor station No. or Apartment No.		System controller	No. of audio outdoor station fed by standard system sontroller or mini system controller				Button Module	Nameplate Module	Audio Outdoor Station Composed by 3-row Button Modules																Distance range and cable type									
									Audio Module						Cover Frame & Flush-mounted Box																			
M2200.-.		M2300 or M2301	The article no. of the composed OS modules are shown in the right				M251021P3	51021DN	M251021A-.		M251022A-.		M251023A-.		51021CF-.+ 41021F	51022CF-.+ 41022F	51023CF-.+41023F	51024CF-.+41024F	51028CF-.+41028F	51025CF-.+41025F	51026CF-.+41026F	51029CF-. +41029F	51024CF-. +41024F + 51021J		A=From one or parallell outdoor stations to the furthest indoor station B=From system controller to the furthest indoor station									
			By M2300	By M2301	By M2300	By M2301			x1		x1		x1												Coax, 75-5		RVV, Ø=1mm,		J-Y(ST)-Y,Ø=0.8mm,		J-Y(ST)-Y,Ø=0.6mm,		UTP 5, 2 x 2pairs	
									Below apartment no. is composed by selected push button module and the selected audio module																									
Single	Double		Single		Double				Single	Double	Single	Double	Single	Double											A	B	A	B	A	B	A	B	A	B
1-2	1-4	1	6	4	6	4	-	-			1	1-2	2	3-4											650m	600m	610m	570m	410m	370m	230m	200m	640m	580m
3-5	5-10	1	5	3	5	2	1	-	3	5-6	4	7-8	5	9-10											650m	540m	610m	510m	410m	340m	230m	190m	640m	520m
6-8	11-16	1	5	2	4	2	2	-	6	11-12	7	13-14	8	15-16											650m	480m	610m	450m	410m	300m	230m	170m	640m	460m
9-11	17-22	1	4	2	3	1	3	-	9	17-18	10	19-20	11	21-22											650m	390m	610m	370m	410m	240m	230m	140m	640m	370m
12-14	23-28	1	4	2	3	1	4	-	12	23-24	13	25-26	14	27-28											650m	350m	610m	330m	410m	220m	230m	130m	640m	340m
15-17	29-34	1	3	2	2	1	5	-	15	29-30	16	31-32	17	33-34											650m	300m	610m	280m	410m	190m	230m	110m	640m	290m
18-20	35-40	1	3	1	2	-	6	1	18	35-36	19	37-38	20	39-40											650m	280m	610m	260m	410m	180m	230m	100m	640m	270m
21-23	41-46	1	3	1	2	-	7	-	21	41-42	22	43-44	23	45-46											650m	250m	610m	230m	410m	160m	230m	90m	640m	240m
24-26	47-52	1	2	1	1	-	8	1	24	47-48	25	49-50	26	51-52											650m	230m	610m	220m	410m	150m	230m	80m	640m	220m
27-29	53-58	1	2	1	1	-	9	-	27	53-54	28	55-56	29	57-58											650m	210m	610m	200m	410m	130m	230m	70m	640m	200m
30-32	59-64	1	2	1	1	-	10	1	30	59-60	31	61-62	32	63-64											650m	200m	610m	190m	410m	120m	230m	70m	640m	190m
33-35	65-70	1	2	1	1	-	11	-	33	65-66	34	67-68	35	69-70											650m	180m	610m	170m	410m	110m	230m	60m	640m	170m

* Optional to install rain hood	51021RH	51022RH	51023RH	51024RH	51028RH	51025RH	51026RH	51029RH	51027RH

Remarks:

1. For each of the additional parallel outdoor station , it should be locally powered. For example, for a building with 32 apartments, the 3-row single button modules are used, totally, 3 outdoor stations are required, then 2 outdoor stations can be powered by standard system controller, and the third one should be powered by mini local power supply.

2. For double button outdoor station, despite techenically possible with the combination of audio module with button, it is recommended to use pure audio module with 3-row button module. Then for example for 28 buttons, the 5 pcs of 3-row button module should be used.

Indoor station No. or Apartment No.		System controller	No. of audio outdoor station fed by standard system sontroller or mini system controller				Button Module	Nameplate Module	Audio Outdoor Station Composed by 4-row Button Modules																Distance range and cable type									
									Audio Module						Cover Frame & Flush-mounted Box																			
M2200.-.		M2300 or M2301	The article no. of the composed OS modules are shown in the right				M251021P4	51021DN	M251021A-.		M251022A-.		M251023A-.		51021CF-.+ 41021F	51022CF-.+ 41022F	51023CF-.+41023F	51024CF-.+41024F	51028CF-.+41028F	51025CF-.+41025F	51026CF-.+41026F	51029CF-. +41029F	51024CF-. +41024F + 51021J		A=From one or parallell outdoor stations to the furthest indoor station B=From system controller to the furthest indoor station									
			By M2300	By M2301	By M2300	By M2301			x1		x1		x1												Coax, 75-5		RVV, Ø=1mm,		J-Y(ST)-Y,Ø=0.8mm,		J-Y(ST)-Y,Ø=0.6mm,		UTP 5, 2 x 2pairs	
									Below apartment no. is composed by selected push button module and the selected audio module																									
Single	Double		Single		Double				Single	Double	Single	Double	Single	Double											A	B	A	B	A	B	A	B	A	B
1-2	1-4	1	6	4	6	4	-	-			1	1-2	2	3-4											650m	600m	610m	570m	410m	370m	230m	200m	640m	580m
3-6	7-12	1	5	3	4	2	1	-	3-4	7-8	5	9-10	6	11-12											650m	540m	610m	510m	410m	340m	230m	190m	640m	520m
7-10	15-20	1	4	2	4	1	2	-	7-8	15-16	9	17-18	10	19-20											650m	430m	610m	400m	410m	270m	230m	150m	640m	410m
11-14	23-28	1	4	2	3	1	3	-	11-12	23-24	13	25-26	14	27-28											650m	350m	610m	330m	410m	220m	230m	130m	640m	340m
15-18	31-36	1	3	2	2	-	4	-	15-16	31-32	17	33-34	18	35-36											650m	300m	610m	280m	410m	190m	230m	110m	640m	290m
19-22	39-44	1	3	1	2	-	5	-	19-20	39-40	21	41-42	22	43-44											650m	260m	610m	250m	410m	170m	230m	90m	640m	250m
23-26	47-52	1	3	1	1	-	6	1	23-24	47-48	25	49-50	26	51-52											650m	230m	610m	220m	410m	150m	230m	80m	640m	220m
27-30	55-60	1	2	1	1	-	7	-	27-28	55-56	29	57-58	30	59-60											650m	210m	610m	200m	410m	130m	230m	70m	640m	200m
31-34	63-68	1	2	-	1	-	8	1	31-32	63-64	33	65-66	34	67-68											650m	190m	610m	180m	410m	120m	230m	70m	640m	180m
35-38	71-76	1	2	-	1*	-	9	-	35-36	71-72	37	73-74	38	75-76											650m	170m	610m	160m	410m	110m	230m	60m	640m	170m
39-42	79-84	1	2	-	1*	-	10	1	39-40	79-80	41	81-82	42	83-84											650m	160m	610m	150m	410m	100m	230m	60m	640m	150m
43-46	87-92	1	2	-	1*	-	11	-	43-44	87-88	45	89-90	46	91-92											650m	150m	610m	140m	410m	90m	230m	50m	640m	140m

Remarks:

1. * means the outdoor station should be powered by one mini local power supply when the no. of indoor stations are more than 73, as thestandard system controller can not fully cover the required power units

2. For each of the additional parallel outdoor station , it should be locally powered. For example, for a building with 64 apartments, the 4-rowdouble button modules are used, totally, 2 outdoor stations are required, then one outdoor station is powered by standard system controller,and the second one should be powered by mini local power supply.

* Optional to install rain hood

51021RH	51022RH	51023RH	51024RH	51028RH	51025RH	51026RH	51029RH	51027RH

02 Planning
Quick reference

Indoor station No. or Apartment No.		Video distributor No.		System controller	No. of video outdoor station fed by standard system sontroller or mini system controller		Video Outdoor Station Composed by 3-row Button Modules: Camera Module	Button Module	Nameplate Module	Audio Module						Cover Frame & Flush-mounted Box								Distance range and cable type									
M2231.-. M2230.-.		M2304		M2300 or M2301	The article no. of the composed OS modules are shown in the rightt		M251021C	M251021P3	51021DN	M251021A-. x1		M251022A-. x1		M251023A-. x1		51022CF -. + 41022F	51023CF -. + 41023F	51024CF -. + 41024F	51028CF -. + 41028F	51025CF -. + 41025F	51026CF -. + 41026F	51029CF -. + 41029F	51024CF -. + 41024F + 51021J	A=From one or parallell outdoor stations to the furthest indoor station B=From system controller to the furthest indoor station									
or										Below apartment no. is composed by selected push button module and the selected audio module														Coax, 75-5		RVV, Ø=1mm,		J-Y(ST)-Y,Ø=0.8mm,		J-Y(ST)-Y,Ø=0.6mm,		UTP 5, 2 x 2pairs	
Single	Double	Single	Double		Single	Double				Single	Double	Single	Double	Single	Double									A	B	A	B	A	B	A	B	A	B
1-2	1-4	1	1	1	4 or 1*	4 or 1*	1	-	-			1	1-2	2	3-4									470m	340m	290m	320m	150m	210m	130m	120m	300m	330m
3-5	5-10	1-2	2-3	1	4	3	1	1	-	3	5-6	4	7-8	5	9-10									450m	290m	280m	270m	140m	180m	130m	100m	290m	280m
6-8	11-16	2	3-4	1	3	3	1	2	-	6	11-12	7	13-14	8	15-16									450m	270m	280m	260m	140m	170m	130m	100m	290m	260m
9-11	17-22	3	5-6	1	3	2	1	3	-	9	17-18	10	19-20	11	21-22									430m	240m	260m	230m	140m	150m	120m	80m	280m	230m
12-14	23-28	3-4	6-7	1	3	2	1	4	-	12	23-24	13	25-26	14	27-28									430m	210m	260m	200m	140m	130m	120m	80m	280m	210m
15-17	29-34	4-5	8-9	1	2	2	1	5	1	15	29-30	16	31-32	17	33-34									410m	190m	250m	190m	130m	120m	120m	70m	270m	190m
18-20	35-40	5	9-10	1	2	1	1	6	-	18	35-36	19	37-38	20	39-40									410m	180m	250m	170m	130m	110m	120m	60m	270m	170m
21-23	41-46	6	11-12	1	2	1	1	7	1	21	41-42	22	43-44	23	45-46									390m	160m	240m	160m	120m	100m	110m	60m	250m	160m
24-26	47-52	6-7	12-13	1	2	1	1	8	-	24	47-48	25	49-50	26	51-52									370m	150m	230m	150m	120m	90m	110m	50m	240m	140m
27-29	53-58	7-8	14-15	1	1	1**	1	9	1	27	53-54	28	55-56	29	57-58									370m	140m	230m	140m	120m	90m	110m	50m	240m	130m
30-32	59-64	8	15-16	1	1	1**	1	10	-	30	59-60	31	61-62	32	63-64									350m	140m	220m	130m	110m	90m	100m	50m	230m	130m
Optional to install rain hood																51022RH	51023RH	51024RH	51028RH	51025RH	51026RH	51029RH	51027RH	For each one of video parallel OS, for A, below amount of distance should be subtracted.									
																								50m	-	30m	-	20m	-	20m	-	40m	-

Remarks:

1. * means one mini system controller, others are the no. of standard system controller.(M2300)
2. ** means the local power supply should power that outdoor station in addtion to the system controller(M2301)
3. For each of the additional parallel outdoor station , it should be locally powered. For example, for a building with 32 apartments, 2 outdoorstations are required, then one outdoor station is powered by standard system controller, and the second outdoor station should be poweredby mini local power supply.
4. For double button outdoor station, despite techenically possible with the combination of audio module with button, it is recommended touse pure audio module with 3-row button module. Then for example for 28 buttons, the 5 pcs of 3-row button module should be used.

Indoor station No. or Apartment No.		Video distributor No.		System controller	No. of video outdoor station fed by standard system sontroller or mini system controller		Video Outdoor Station Composed by 4-row Button Modules																						Distance range and cable type									
							Camera Module	Button Module	Nameplate Module	Audio Module						Cover Frame & Flush-mounted Box																						
M2231.-. M2230.-.		M2304		M2300 or M2301	The article no. of the composed OS modules are shown in the rightt		M251021C	M251021P4	51021DN	M251021A-. x1		M251022A-. x1		M251023A-. x1		51022CF -. + 41022F	51023CF -. + 41023F	51024CF -. + 41024F	51028CF -. + 41028F	51025CF -. + 41025F	51026CF -. + 41026F	51029CF -. + 41029F	51024CF -. + 41024F + 51021J			A=From one or parallell outdoor stations to the furthest indoor station B=From system controller to the furthest indoor station									
or										Below apartment no. is composed by selected push button module and the selected audio module																Coax, 75-5		RVV, Ø=1mm,		J-Y(ST)-Y,Ø=0.8mm,		J-Y(ST)-Y,Ø=0.6mm,		UTP 5, 2 x 2pairs	
Single	Double	Single	Double		Single	Double				Single	Double	Single	Double	Single	Double											A	B	A	B	A	B	A	B	A	B
1-2	1-4	1	1	1	4 or 1*	4 or 1*	1	-	-			1	1-2	2	3-4											470m	340m	290m	320m	150m	210m	130m	120m	300m	330m
3-6	5-12	1-2	2-3	1	4	3	1	1	-	3-4	7-8	5	9-10	6	11-12											450m	290m	280m	270m	140m	180m	130m	100m	290m	280m
7-10	13-20	2	3-4	1	3	3	1	2	-	7-8	15-16	9	17-18	10	19-20											450m	250m	280m	240m	140m	160m	130m	90m	290m	240m
11-14	21-28	3	5-6	1	3	2	1	3	-	11-12	23-24	13	25-26	14	27-28											430m	210m	260m	200m	140m	130m	120m	80m	280m	210m
15-18	29-36	3-4	6-7	1	3	2	1	4	-	15-16	31-32	17	33-34	18	35-36											430m	190m	260m	180m	140m	120m	120m	70m	280m	190m
19-22	37-44	4-5	8-9	1	2	1	1	5	1	19-20	39-40	21	41-42	22	43-44											410m	170m	250m	160m	130m	110m	120m	60m	270m	160m
23-26	45-52	5	9-10	1	2	1	1	6	-	23-24	47-48	25	49-50	26	51-52											410m	160m	250m	150m	130m	100m	120m	60m	270m	150m
27-30	53-60	6	11-12	1	2	1	1	7	1	27-28	55-56	29	57-58	30	59-60											390m	150m	240m	140m	120m	90m	110m	50m	250m	140m
31-34	61-68	6-7	12-13	1	1	1**	1	8	-	31-32	63-64	33	65-66	34	67-68											370m	130m	230m	120m	120m	80m	110m	50m	240m	130m
35-38	69-76	7-8	14-15	1	1	1**	1	9	1	35-36	71-72	37	73-74	38	75-76											370m	120m	230m	120m	120m	80m	110m	40m	240m	120m
39-42	77-84	8	15-16	1	1	1**	1	10	-	39-40	79-80	41	81-82	42	83-84											350m	120m	220m	110m	110m	80m	100m	40m	230m	110m
Optional to install rain hood																51022RH	51023RH	51024RH	51028RH	51025RH	51026RH	51029RH	51027RH			For each one of video parallel OS, for A, below amount of distance should be subtracted.									
																										50m	-	30m	-	20m	-	20m	-	40m	-

Remarks:

1. * means one mini system controller, others are the no. of standard system controller(M2300)

2. ** means the local power supply should power that outdoor station in addtion to the system controller(M2301)

3. For each of the additional parallel outdoor station , it should be locally powered. For example, for a building with 32 apartments, 2 outdoorstations are required, then one outdoor station is powered by standard system controller, and the second outdoor station should be powered by mini local power supply.

The mixed power solution for keypad outdoor station with display

Building ≤250 apartments		Standard System Controller			1st Standard Auxiliary Power Supply		2nd Standard Auxiliary Power Supply		3rd Standard Auxiliary Power Supply		4th Standard Auxiliary Power Supply		Cable type and distance A: Max. distance from outdoor station to the furthest indoor station A1: Max.distance from outdoor station to the furthest gateway B: Max. distance from furthest system controller to the furthest indoor station									
Apartment No.= indoor station No.	Total distributro No.	How many outdoor station fed by standard system controller	Apartment No. with 1 indoor station/ apartment	How many distributor	How many apartment with 1 indoor station/ apartment	How many distributor	How many apartment with 1 indoor station/ apartment	How many distributor	How many apartment with 1 indoor station/ apartment	How many distributor	How many apartment with 1 indoor station/ apartment	How many distributor	Coax, 75-5		Ø=1 mm, RVV,		Ø=0.8 mm, J-Y(ST)-Y,		Ø=0.6 mm, J-Y(ST)-Y,		2 x 2 pairs UTP 5,	
Audio system with audio keypad outdoor station with display (without auxiliary power supply)													A	B	A	B	A	B	A	B	A	B
1-24	-	2	24	-	-	-	-	-	-	-	-	-	650 m	390 m	610 m	370 m	410 m	240 m	230 m	140 m	640 m	370 m
25-60	-	1	60	-	-	-	-	-	-	-	-	-	650 m	210 m	610 m	200 m	410 m	130 m	230 m	70 m	640 m	200 m
61-96	-	1*	96		-	-	-	-	-	-	-	-	650 m	140 m	610 m	130 m	410 m	90 m	230 m	50 m	640 m	140 m
Audio system with audio keypad outdoor station with display (for auxiliary power supply)														B		B		B		B		B
	-	-	-	-	79	-	-	-	-	-	-	-	-	170 m	-	160 m	-	100 m	-	60 m	-	160 m
Audio system with audio keypad outdoor station with display (with auxiliary power supply)													A1**	B		B		B		B	A1**	B
97-158	-	2	-	-	79	-	79	-	-	-	-	-	650 m	170 m	610 m	160 m	410 m	100 m	-	-	640 m	160 m
159-237	-	2	-	-	79	-	79	-	79	-	-	-	650 m	170 m	610 m	160 m	410 m	100 m	-	-	640 m	160 m
238-250	-	2	13	-	79	-	79	-	79	-	-	-	650 m	170 m	610 m	160 m	410 m	100 m	-	-	640 m	160 m
Video system with video keypad outdoor station with display, indoor station is 4.3" video handset/hands-free or audio handset. (without auxiliary power supply)													A	B	A	B	A	B	A	B	A	B
9	3	2	9	3	-	-	-	-	-	-	-	-	390 m	310 m	240 m	300 m	120 m	200 m	110 m	110 m	250 m	300 m
10-43	11	1	43	11	-	-	-	-	-	-	-	-	390 m	170 m	240 m	160 m	120 m	110 m	110 m	60 m	250 m	160 m
44-76	19	1*	76	19	-	-	-	-	-	-	-	-	330 m	120 m	200 m	110 m	110 m	80 m	90 m	40 m	220 m	110 m
Video system with video keypad outdoor station with display, indoor station is 4.3" video handset/hands-free or audio handset (for auxiliary power supply)														B		B		B		B		B
-	-	-	-	-	63	16	-	-	-	-	-	-	-	140 m	-	130 m	-	90 m	-	50 m	-	130 m
Video system with video keypad outdoor station with display, indoor station is 4.3" video handset/hands-free or audio handset (with auxiliary power supply)													A1**	B		B		B		B	A1**	B
77-103	26	1	40	10	63	16	-	-	-	-	-	-	240 m	140 m	150 m	130 m	80 m	90 m			150 m	130 m
104-126	32	2	-	-	63	16	63	16	-	-	-	-	260 m	140 m	160 m	130 m	80 m	90 m	-	-	170 m	130 m
127-189	48	2	-	-	63	16	63	16	63	16	-	-	260 m	140 m	160 m	130 m	80 m	90 m	-	-	170 m	130 m

Remarks:
* means the outdoor station(s) are all fed by local power supply, and the power of system controller is used exclusively to power the indoor stations. Please note that the total cable length of the system should be less than 800 meters. Fig. 02-47 Fig. 02-48
**means the Max. distance from furthest outdoor station to the furthest indoor station/gateway under one auxiliary power supply. Unit:m

» In case each building should be connected to a residential complex, a building gateway with 5 consumer units should be considered, which will result in:
1) 5 less audio indoor stations in audio system for the standard system controller. E.g., a max. of 55 audio indoor stations with 1 audio keypad outdoor station can be powered by one system controller plus a building gateway.
2) 4 indoor stations and 1 video distributor in video system for the standard system controller. E.g., a max. of 72 video indoor stations with 18 video distributors and 1 video keypad outdoor station (fed by mini local power supply) can be powered by one system controller

» In case several auxiliary power supplies or several standard system controllers with building gateway are used, if possible, it is recommended to power the same amount of devices for each auxiliary power supply or system controller. Fig. 02-80

For buildings with more than 250 apartments, it can be handled by using gate station as the apartment outdoor station, and splitting the whole building into several sections with section connected by one building gateway. Fig. 0-7

Building ≤250 apartments		Standard System Controller			1st Building Gateway + Standard System Controller		2nd Building Gateway + Standard System Controller		3rd Building Gateway + Standard System Controller		4th Building Gateway + Standard System Controller		5th Building Gateway + Standard System Controller		6th Building Gateway + Standard System Controller		Cable type and distance A1: The max. distance from outdoor station to the furthest gateway B: Max. distance from furthest system controller to the furthest indoor station				
Total apartment No. = indoor station No.	Total distributro No.	How many outdoor station fed by standard system controller	Apartment No. with 1 indoor station/ apartment	How many distributor	How many outdoor station fed by standard system controller	How many distributor	How many outdoor station fed by standard system controller	How many distributor	How many outdoor station fed by standard system controller	How many distributor	How many outdoor station fed by standard system controller	How many distributor	How many outdoor station fed by standard system controller	How many distributor	How many outdoor station fed by standard system controller	How many distributor	Coax, 75-5	RW, Ø= 1 mm	J-Y (ST)-Y Ø= 0.8 mm	J-Y (ST)-Y Ø= 0.6 mm	UTP 5 2 x 2 pairs
																	A1 + B	A1 + B	A1 + B	-	A1 + B
251-315	80	2	-	-	63	16	63	16	63	16	63	16	63	16	-	-	240 m + 140 m	150 m + 130 m	80 m + 90 m		150 m + 130 m
316-378	96	2	-	-	63	16	63	16	63	16	63	16	63	16	63	16	240 m + 140 m	150 m + 130 m	80 m + 90 m		150 m + 130 m

General Remarks :

» If more keypad outdoor stations are needed, each additional outdoor station should be powered by local power supply. The distance will be impacted.

» If one video distributor does not support 4 indoor stations, please base on one standard auxiliary power supply that can feed a total of 79 units to count the capacity (84-5 units of gateway) For example, it can be 52 indoor stations plus 26 video distributors with one supporting 2 indoor stations.

» If parallel indoor stations are present, please base on the power consumer units calculation rule to count the capacity in Table 1 and Table 2.

Fig. 02-80

Keypad outdoor station solution example: One building with 3 keypad video outdoor stations with display, total 240 apartments, each auxiliary power supply with 60 pcs 4.3" hands-free indoor station

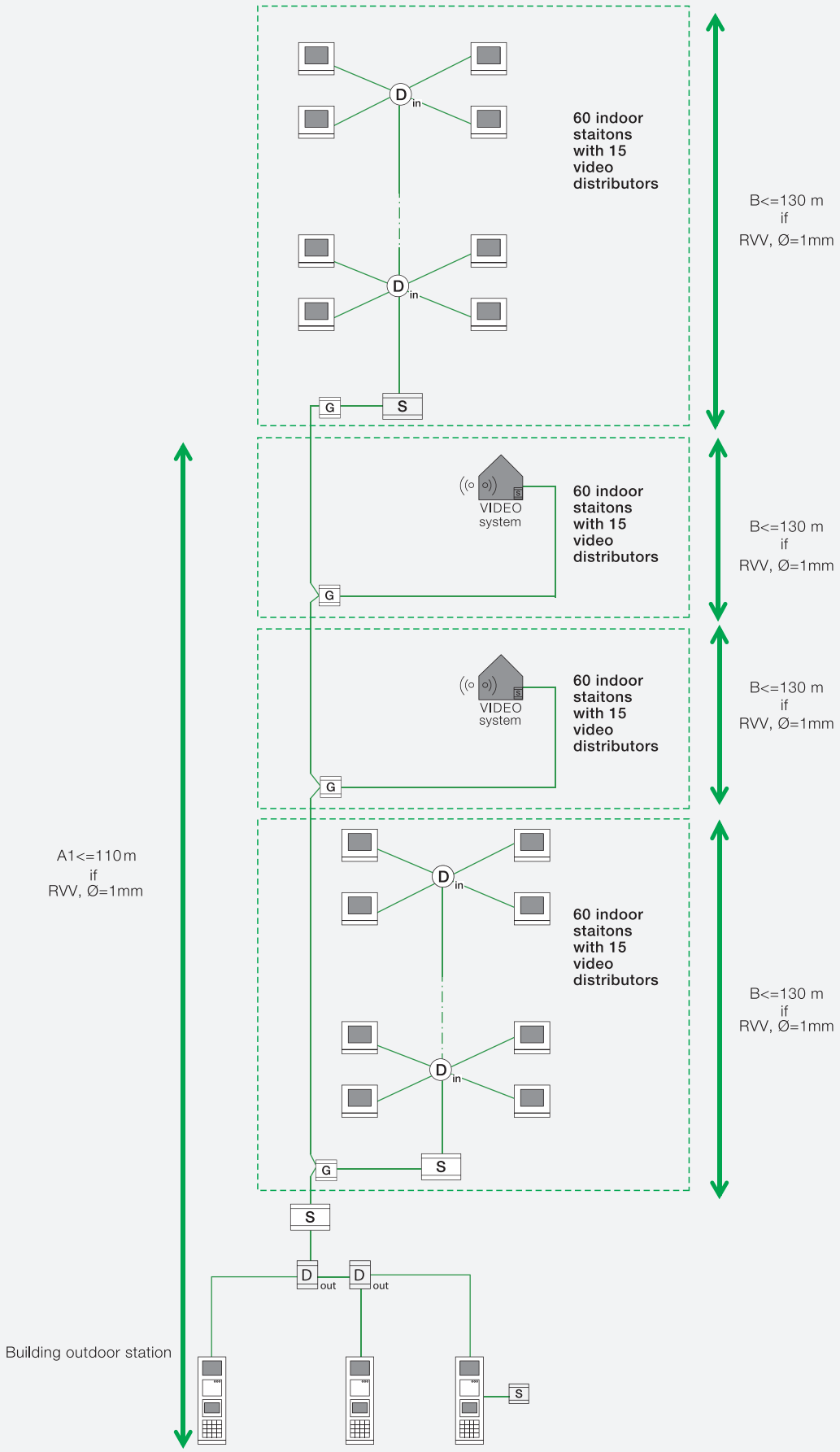

03 Installation

Following is general information for installation of an ABB-Welcome system in new and existing buildings. The installation of flush-mounted and surface-mounted devices as well as MDRC units and Kit is described in detail in the operating manuals for each device. The video shows the installation in more detail.

Installation instructions for new buildings
The following should be considered when setting up the system to allow for future upgrades:

- Despite many kinds of cables are suitable for the ABB-Welcome system, the distance affects the type of cable used, used. Please the page 71 to select the correct cable for the given project.
- For small systems: Looping the internal bus from device to device is recommended.
- For high rising building: Setup of a structure with a rising mains is recommended.
- For small networked system: Looping trunk line from one villa/building to next villa/building through gateway is recommended. If two or more trunk lines are provided, many internal bus lines can be used. But please pay attention to the distance restraint of this topology to keep the sum of the wiring distance smaller than 800 meters.
- For big networked residential complex:
  Branch line connections for the trunk line is recommended by gateway plus video distributor is recommended.

Please check chapter 2 for the distance and capacity for all above mentioned scenarios.

ABB-Welcome audio system should make later conversion to video easy. The conversion includes the exchange of at least one audio outdoor station with a video outdoor station and at least one audio indoor station with a video indoor station. The system controller doesn't need to be replaced. However, if the total power consumption of the conversed system exceeds the capacity of the original system controller, additional bus power supply (gateway + system controller) should be put in the bus.

For branch connections in the system, video distributors must be installed for the conversion. This is very important. If not, the conversion will become very time-consuming, as even the exchange of one audio indoor station with one video indoor station will require a total change of the original node connection into branch line connection by video distributor. These are not required in the internal bus – if it is looped from device to device. The setting of the terminal resistors of the system must be checked after the conversion.
(see page 60-65)

Installation instructions for modernization
The modernization of a building is an ideal opportunity for replacing an existing door entry system with an ABB-Welcome system within the design of the other electrical installations.

Independent of the type of wiring of the old system (pure bell system, system with "1+n" technology or comparable systems with 2-wire bus technique) – existing lines can be used. In case of existing cable material a possible reduction of the transmission range is to be checked.

Conversion of old bell systems in one-family houses to ABB-Welcome
Available:
» At the door: One button
» Indoors: One doorbell
» In the sub-distribution: One transformer for the doorbell and the name plate

The conversion of the bell system in a one-family house to ABB-Welcome system is easy if a cable is available from the front door to the distribution and a cable from the distribution into the building, e.g. in the hallway. This layout is used by the system controller, outdoor station and indoor station.

This enables buildings with only a bell system to be retrofitted with an audio or video system.

The conversion of old bell and intercom systems to ABB-Welcome ("1+n" technique, with coaxial cable for video if necessary) The multifamily house has available:
» At the door: Bells (with "1+n" wiring) + loudspeakers / microphones
» Indoors: In each apartment, one indoor station with doorbell and a button for opening the front door
» In the sub-distribution: One bell transformer for the buzzer/electronic door opener, one transformer for the house telephones

For systems with "1+n" wiring as rising mains installation with branch connections to the indoor stations, only two wires are required from the multi-wire cable. The indoor stations of the ABB Welcome system are also connected to the rising mains via the branch line. For a video system, one indoor FM video distributor should be installed in the branch box. Fig. 03-1

Fig. 03-1

Conversion of "1+n" system to ABB-Welcome (Including audio system and video system)

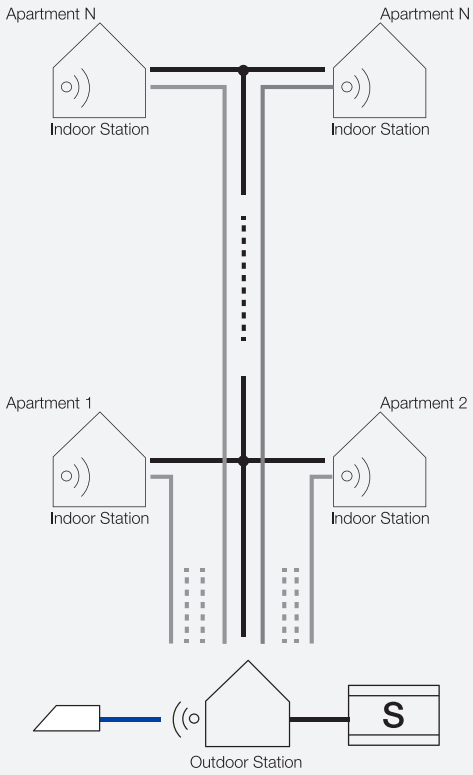

Existing"1+n" system

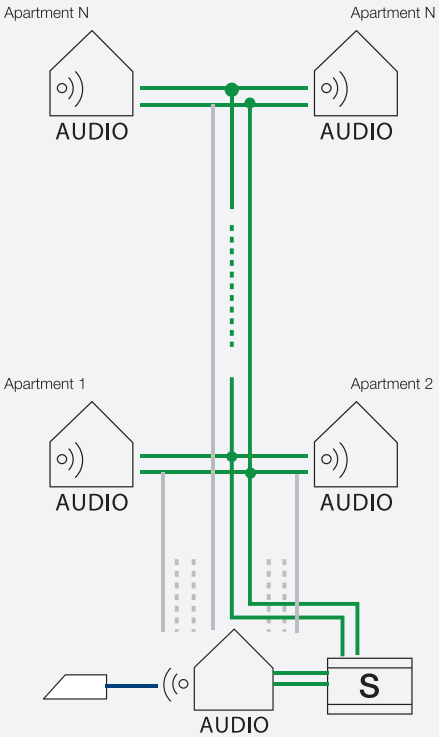

Conversion for audio system

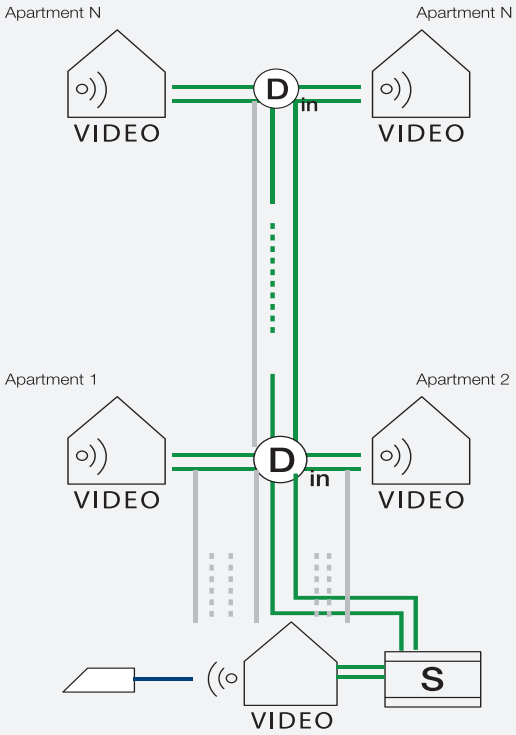

Conversion for video system

Installation of modular outdoor stations

The composition process from modules into an outdoor station is screwless and convenient. The direction to snap the module should be heeded. A "click" sound will be heard when the module is well place. The installation video is available to see the entire process. Fig. 03-2

For all outdoor stations, an installation wall box is available for flush-mounting. The rain hood serves as surface-mounting box as well as the device to protect dirt, water or snow falling on the camera lens.
Flush-mounting is suitable for all types of walls, whether rendered, clinker or cavity wall because the installation box has a full perimeter frame. For flush-mounting in a cavity wall (thickness between 2 and 25 mm), glass glue or similar adhesive material is recommended to seal and adhere the flush box and wall. Fig. 03-3

Flush-mounted boxes can be connected together horizontally through joining fixtures. For example, 3 pcs 1x4 flush-mounted boxes are connected together into a 3x4 flush-mounted box and 5 pcs 1x4 into 5x4. Likewise, 1x2, 1x3, 1x5 flush-mounted box can also be horizontally connected in this way. However, for 3 or more columns horizontal connection, the rain hood is only available for 3x4 flush-mounted boxes. Fig. 03-4

For dismantling the end strip, a distance of 1 cm should be kept to the right of the outdoor station. Fig. 03-5

The camera has a large detection angle. The view area can be manually adjusted by a simple tool with range of +15 ,-15 at all directions. Fig. 03-6

Note: The camera of the video outdoor station should not face powerful light sources, such as street lights. This should be taken into consideration when choosing the correct position for mounting. Lamps in the entrance area should uniformly illuminate the face of the visitor. The recommended installation height is 1.50 m. This optimally captures persons of average body size. Bright or backgrounds with a deep contrast should be avoided. It could reduce the quality of the picture.

Mounting of modular outdoor station Fig. 03-2

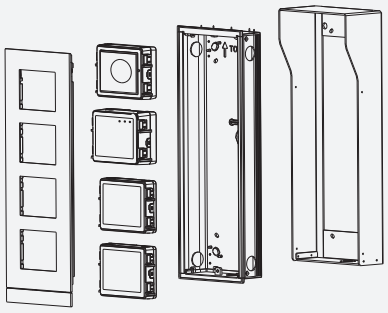

Mounting of outdoor station Fig. 03-3

Surface-mounted with rainhood

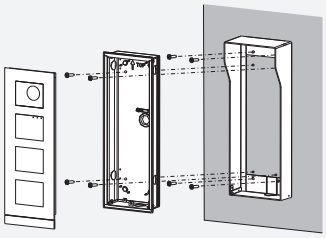

Flush-mounted

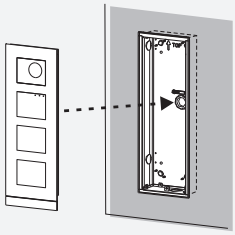

Flush-mounted with rainhood

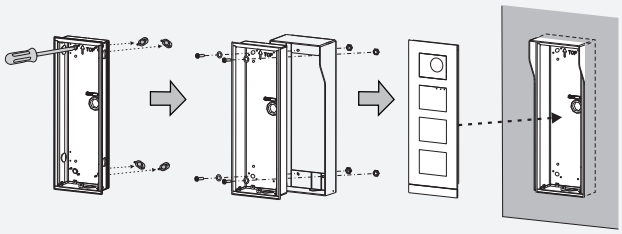

Cavity wall mounting

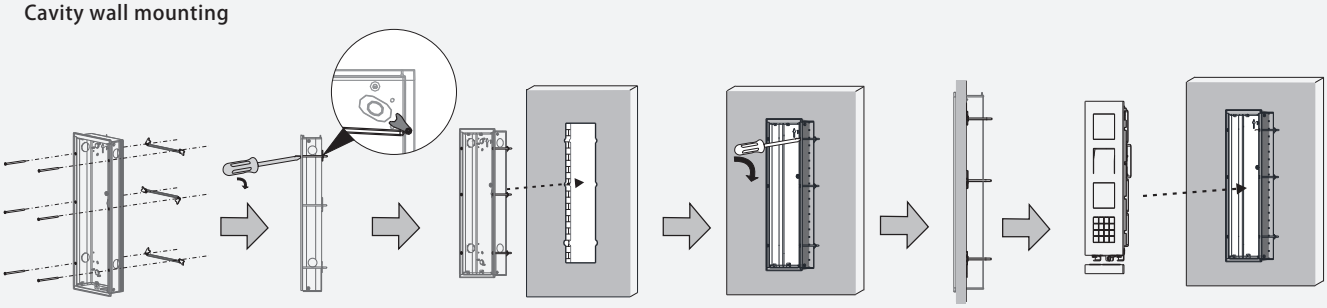

Fig. 03-4

The conjunction of 3 pcs of 4-module outdoor stations

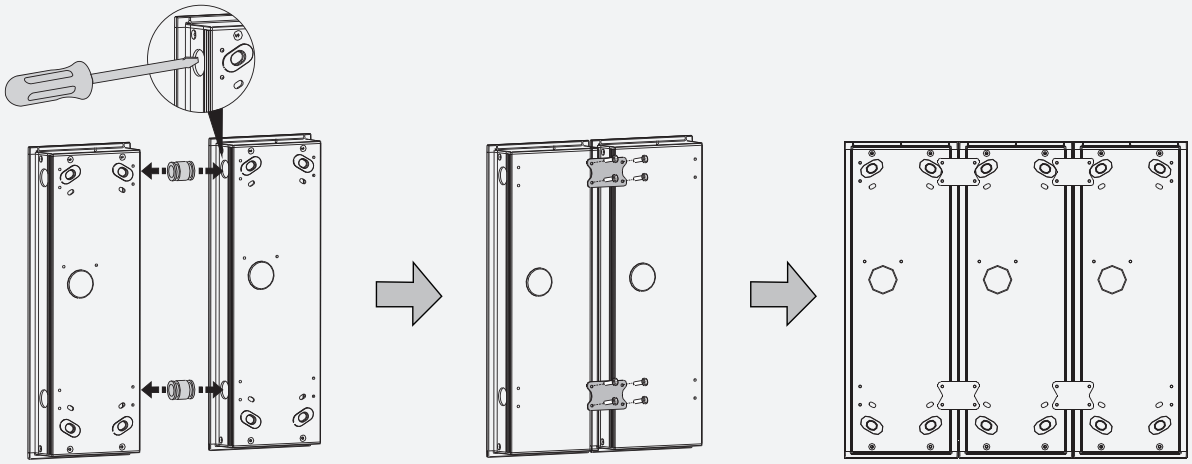

Fig. 03-5

The distance zones for the installation of the outdoor station

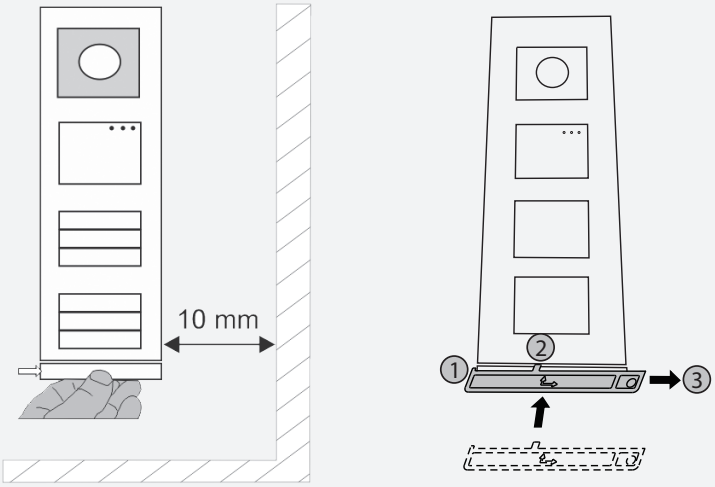

Fig. 03-6

Mechanical adjustment and detection angle of camera

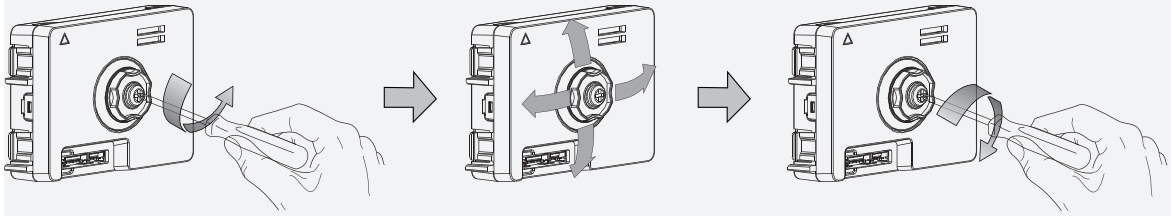

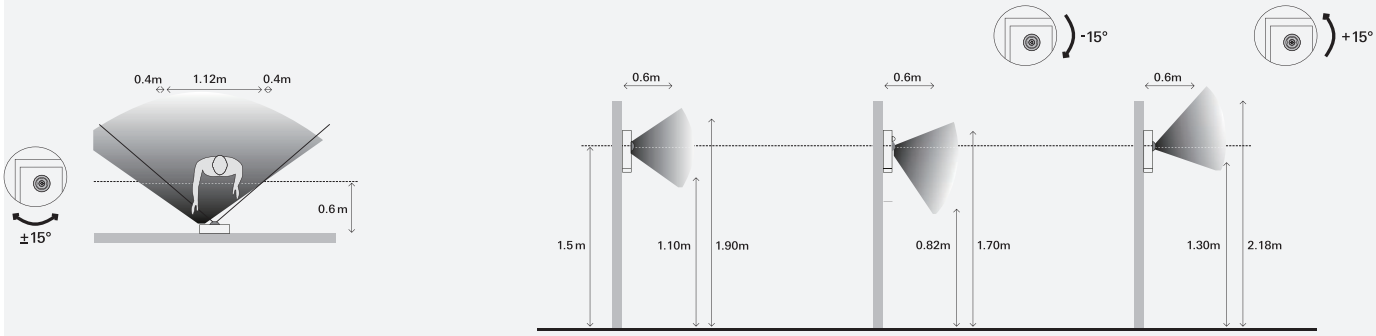

Installation of mini outdoor station

Mini outdoor station with the width of 99mm can support surface-mounted installation, which is the easiest installation for villa application.
Mini outdoor station with the width of 105mm can support flush-mounted installation, and also pre-installation box can be provided if necessary. (Flush-mounted mini outdoor station is available in April ,2017)

Surface-mounted installation

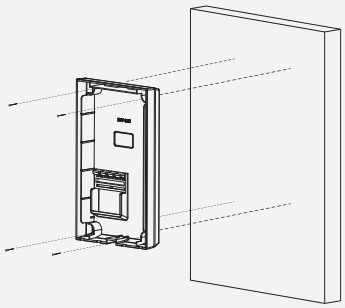

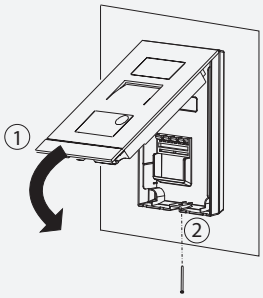

Flush-mounted installation

With pre-installation box

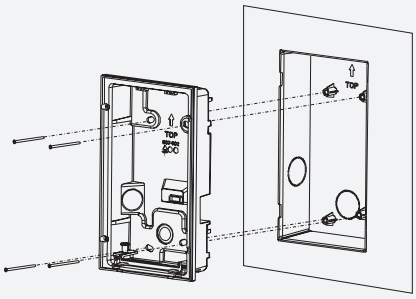

Without pre-installation box

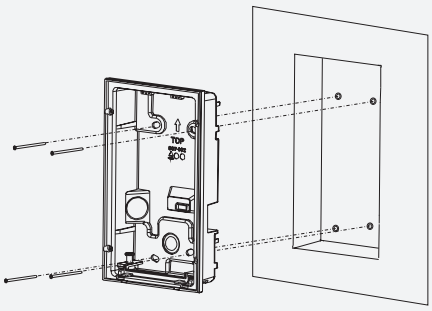

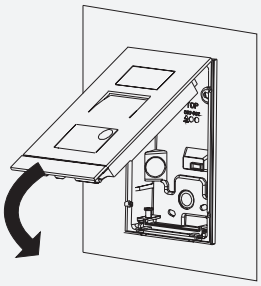

Cavity wall installation

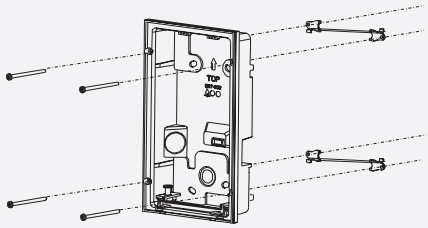

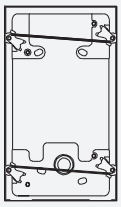

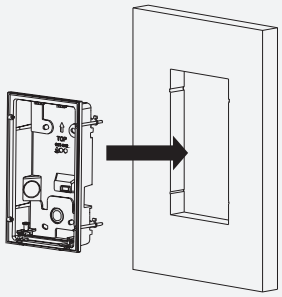

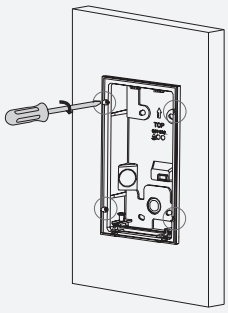

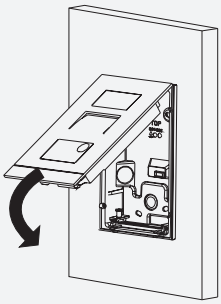

Installation of letter box module

Letter box modules can be installed in a suitable door and letter box system, also the modules can be assembled into a customized panel with the correct space for each module.

Fig. 03-7

Audio integration unit

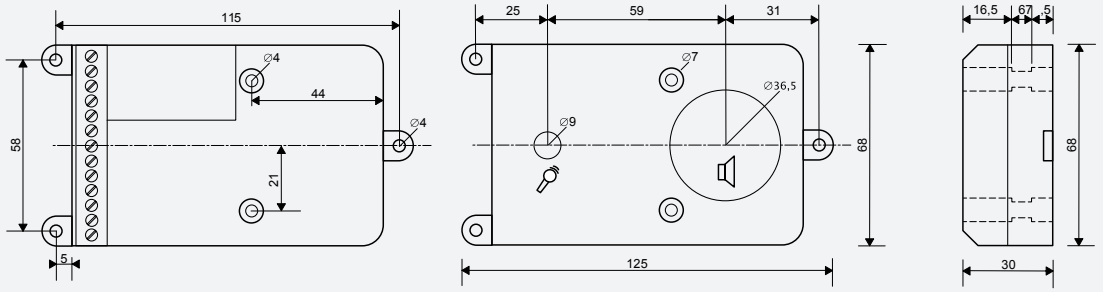

Fig. 03-8

Extension unit

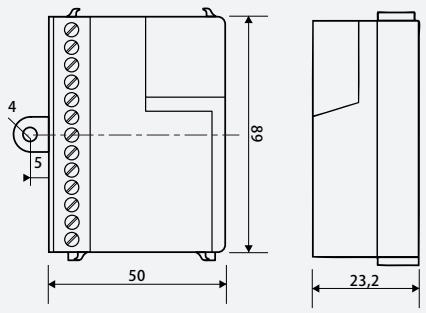

Fig. 03-9

Camera integration module

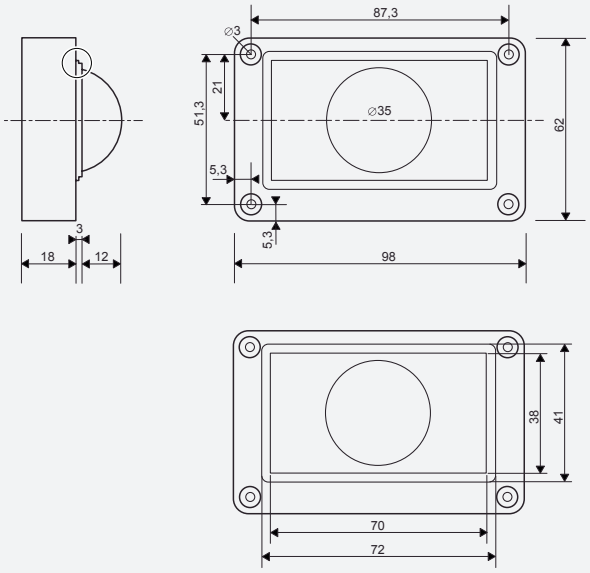

Installation of indoor stations

ABB-Welcome audio or video indoor stations are easy to install as a surface-mounted device with the aid of the enclosed mounting frame. The devices can also be mounted on a commercially available VDE or Italian (or equirement) flush-mounted wall box. Fig. 03-7 Fig. 03-8 Fig. 03-9 Fig. 03-10 Fig. 03-11 Fig. 03-12

The 4.3" video hands-free indoor station can be installed in the design of 5 easily changeable color frames to match the decor, in both surface and flush mounted.
For surface mounted, the device can be mounted on VDE/Italian (or equirement) flush-mounted wall box. For the flush mounted version, a metal flush box is recommended to ensure the efficient and sleek installation. For flush-mounting in a cavity wall (thickness between 0.2 and 2.54 cm),a cavity wall mounting set consisting of mounting anchors is available.

Note: In order for people with disabilities to use and set video handsets, we recommend an installation height of 120-125 cm.

Additional information is contained in the operating manuals. The associated QR codes are listed starting from page 113.

Installation of system devices

Recommendation: All MDRC units should be mounted in the central distribution of the building. This can be fixed depending on the size of the building and topology selected.

For example, when installing an auxiliary power supply in the sub-distribution of the apartment, for connecting the devices.

The ABB-Welcome video distributor is suitable for mounting in rising mains below a doorbell button in a deep flush-mounted wall box.

Camera interface is suitable for surface-mounting and switch actuator can be installed in a flush-mounted box.

There is an optional way for mounting camera interface, switch actuator and video distributor. They can be affixed in DINrail and then installed on mounting rails.

Fig. 03-07

Surface mounted and desktop of 7" video hands-free indoor station

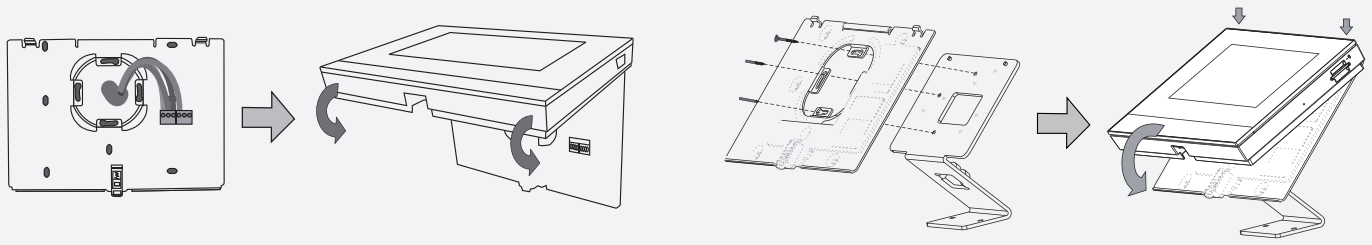

Fig. 03-08

Mounting of 4.3" video hands-free indoor station

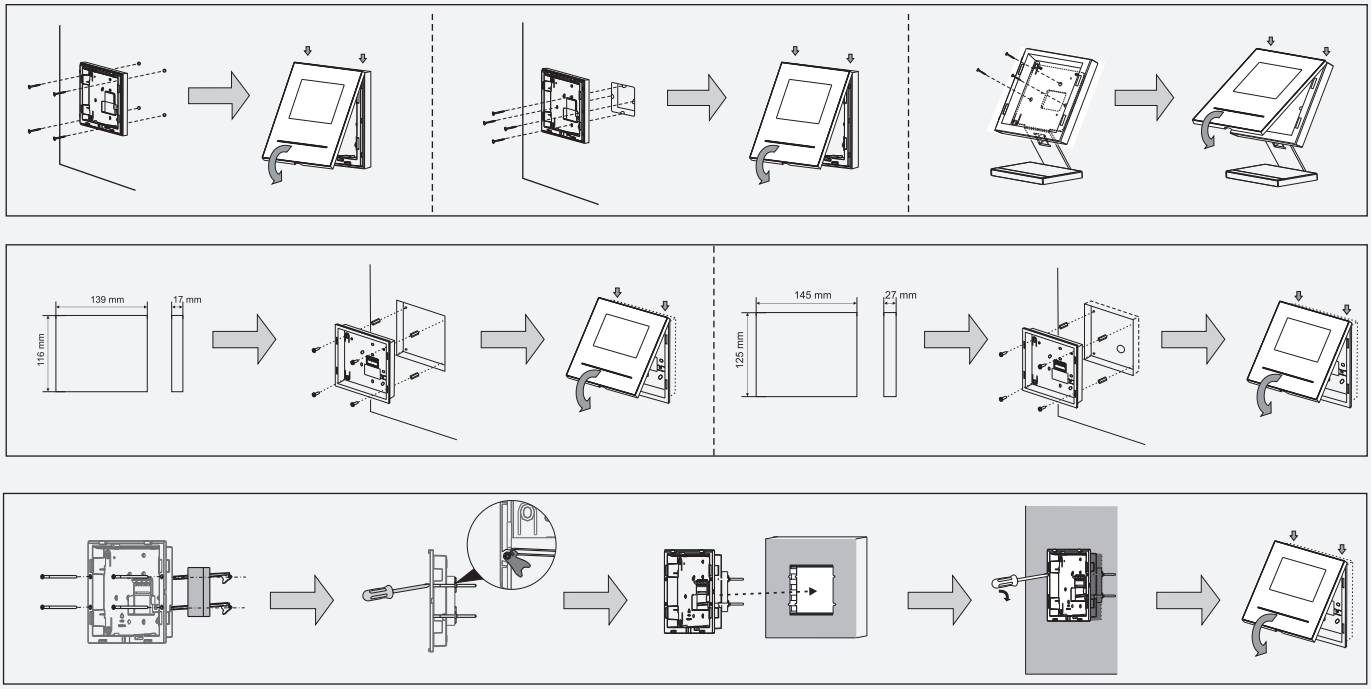

Fig. 03-09

Mounting of Basic 4.3" video hands-free indoor station

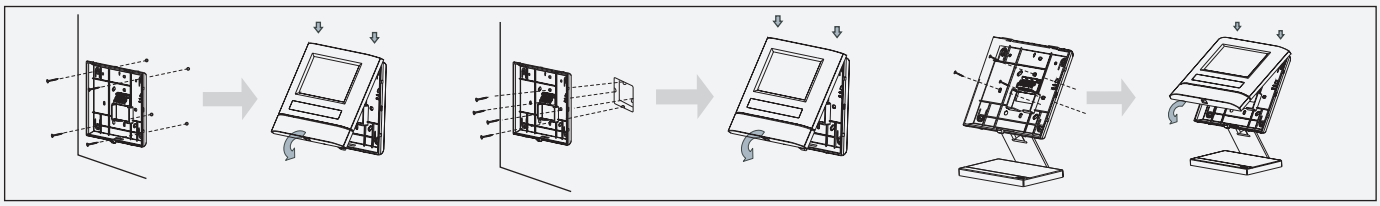

Fig. 03-10

Mounting of 4.3" video handset indoor station

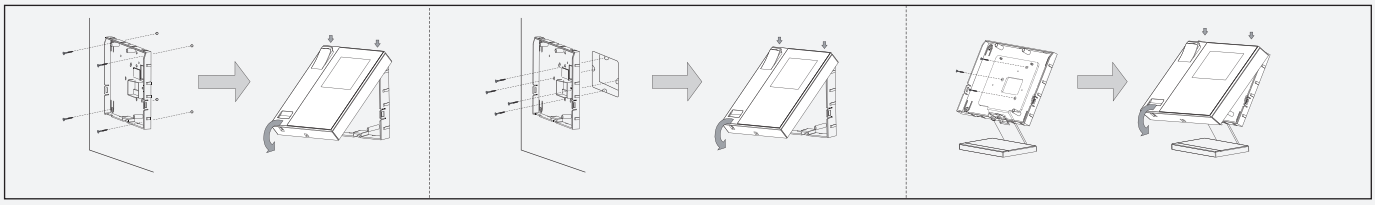

Installation of system devices

Recommendation: All MDRC units should be mounted in the central distribution of the building. This can be fixed depending on the size of the building and topology selected. Fig. 03-16

For example, when installing an auxiliary power supply in the sub-distribution of the apartment, for connecting the devices.

The ABB-Welcome video distributor is suitable for mounting in rising mains below a doorbell button in a deep flush-mounted wall box. Fig. 03-15

Camera interface is suitable for surface-mounting and switch actuator can be installed in a flush-mounted box.
Fig. 03-13 Fig. 03-14

There is an optional way for mounting camera interface, switch actuator and video distributor. They can be affixed in DINrail and then installed on mounting rails. Fig. 03-17

Fig. 03-11

Mounting of audio handset indoor station

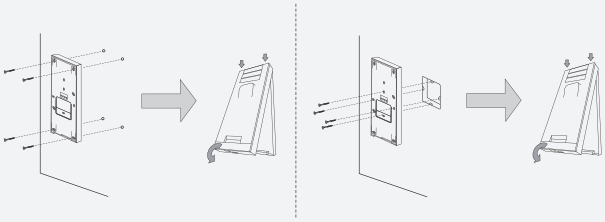

Fig. 03-12

Mounting of audio hands-free indoor station

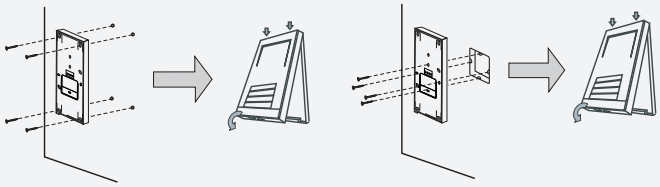

Fig. 03-13

Mounting of camera interface

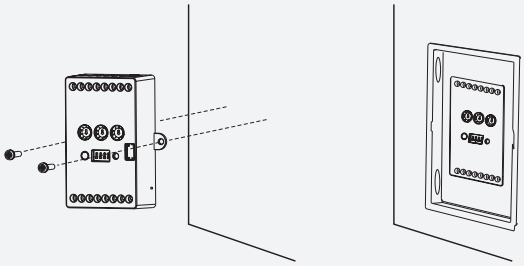

Fig. 03-14

Mounting of switch actuator

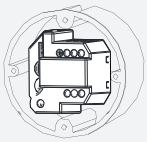

Fig. 03-15

Mounting of video distributor

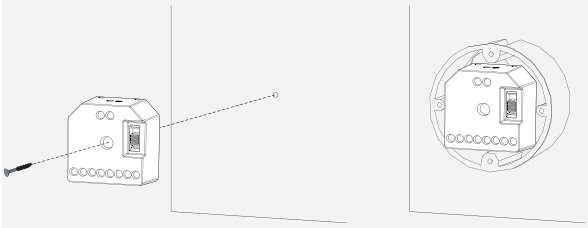

Fig. 03-16

Mounting of MDRC devices

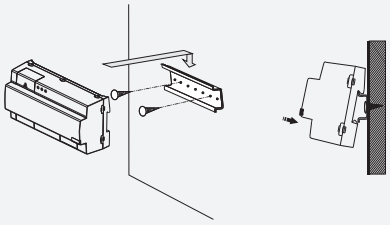

Fig. 03-17

Mounting of DINrail

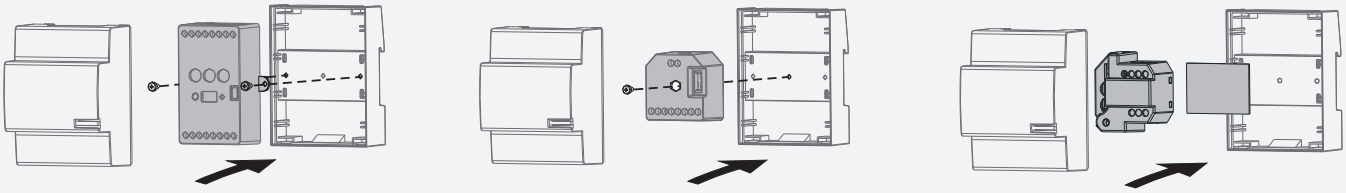

04 Commissioning

Some settings need to be made prior to system installation. These can be done at the factory so devices can be installed at the customer site.

Setting the address of the outdoor station: Fig. 04-1

The allocation to one of the nine inputs of the ABB-Welcome system is made at the outdoor stations and the associated switch actuators for lock and light via the setting of the address.

Here the rotary knob house/outdoor is set on an address between 1 and 9. The knob is located at the rear of the outdoor station.

Setting the button sounds on/off:

At the outdoor stations the acoustic feedback signal is switched on and off via the "TT" button sound switch when the pushbutton is pressed. The switch is located at audio module of outdoor station.

Fig. 04-1

Rotary knob for setting the address of an outdoor station

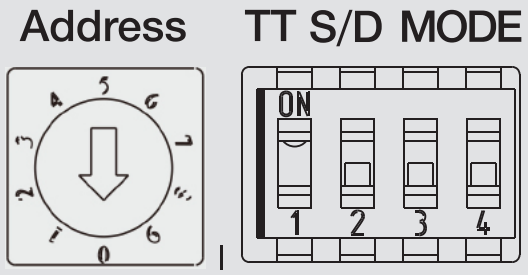

Address: Address of outdoor station

TT: Button sounds (ON=active)

S/D: Single or double button for one row (ON=double buttons)

MODE: Working mode of 1st/ 2nd button

Overview of the different setting options

Device	Setting
Outdoor station	Setting the address of outdoor station
	Setting the button sounds on/off
	Setting the single or double button for one row
	Setting the working mode switch for 1st/2nd button
	Setting the volume from indoor station to outdoor station
	Setting the door release time
	Setting the video signal format
Mini outdoor station	Setting the address of mini outdoor station
	Setting general call function of mini outdoor station
	Setting the working mode switch for 1st/2nd button
	Setting the volume from indoor station to outdoor station
	Setting the video signal format
	Setting default lock of mini outdoor station
Indoor station	Setting the address of indoor station
	Setting default outdoor station
	Setting master indoor station
	Setting terminal resistor
System controller	Setting the working mode "One on "or "All on"
Gateway	Setting the address of gateway
	Setting the working mode of gateway
Switch actuator	Setting the address of switch actuator
	Setting the working mode of switch actuator
	Setting the door opener time and light time
Guard unit	Setting the address of guard unit
Camera interface	Setting of camera interface
	Setting the working mode of camera interface
IP-Gateway	Setting of IP-Gateway
Telephone gateway	Configurating Telephone gateway via IP-Gateway

Setting of outdoor station

Setting the single or double button for one row

In case the push button is present on the outdoor station, once the single or double buttons for one row is set on "S/D" switch, all the push button modules on the outdoor station will behave the same manner, either one button for each of all the button modules or double buttons for each of all the button modules Fig. 04-2

Setting the "MODE" switch for 1st/2nd button

For each row of pushbuttons, both in single button and double button scenarios, 4 modes are possible to set the function of first and second button. When switching the light is desired, the switch actuator is needed to enable the function. Fig. 04-3

Setting the volume from indoor station to outdoor station

The volume from all the indoor stations to outdoor station during communication can be set on the sliding switch in case the outdoor station is installed in a noisy area.

Setting the door lock release time

This setting determines the operating period of the door lock (from one to ten seconds).

Setting the video signal format Fig. 04-4

This setting allows selection of the standard of the video signal of the system, either PAL or NTSC.
PAL Standard video 50 Hz
NTSC Standard video 60 Hz
The jumper is located on the back of the camera module.

Fig. 04-2

1. Setting of single button

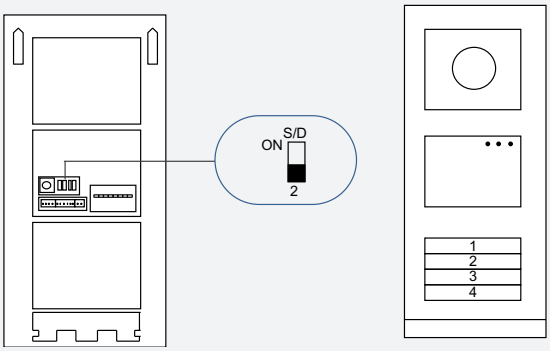

2. Setting of double button

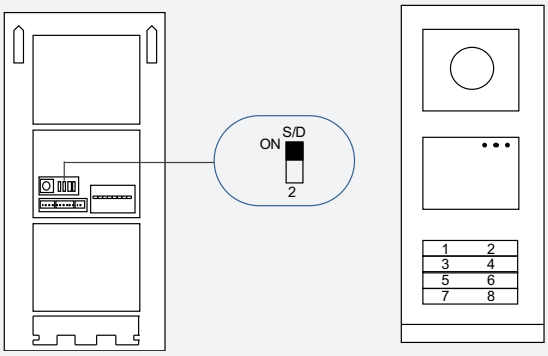

Fig. 04-3

Setting of mode for 1st and 2nd button

1. Setting of the default function

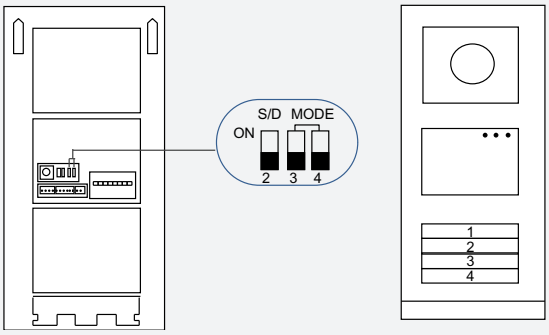

2. Setting of lighting

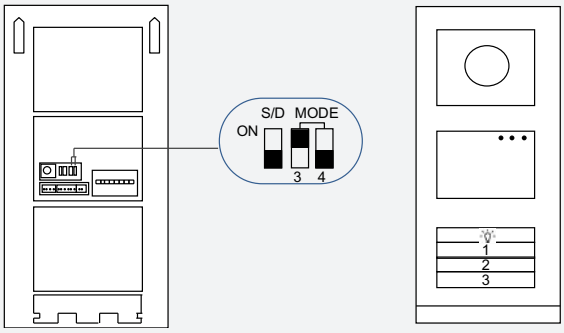

3. Setting of call guard unit

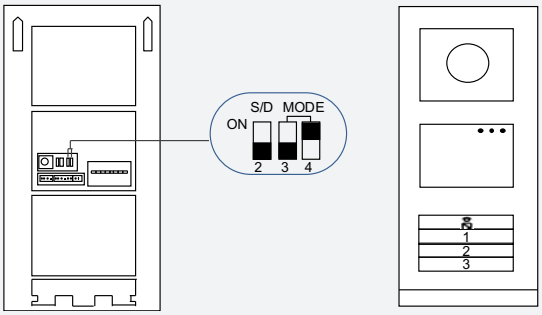

4. Setting of both call guard unit and lighting

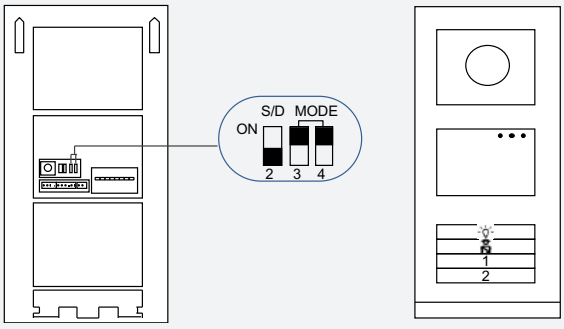

Fig. 04-4

Setting of video signal format

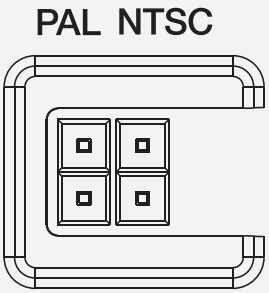

Setting of mini outdoor station

Setting the address of mini outdoor station

Here the rotary knob house/outdoor is set on an address between 1 and 9. The knob is located at the rear of the mini outdoor station.

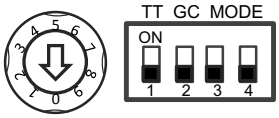

Setting general call function of mini outdoor station

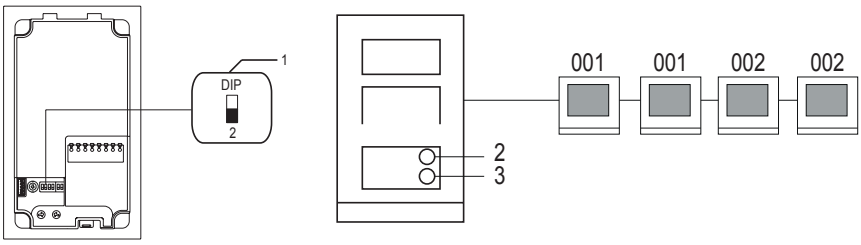

No.	Functions
1	2->OFF
2	Call apartment 001, both 001 indoor stations ring
3	Call apartment 002, both 002 indoor stations ring

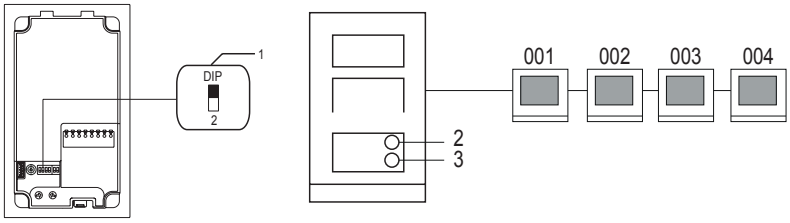

No.	Functions
1	2->ON
2	Call apartment, all 4 indoor stations (different address) ring
3	Call apartment, all 4 indoor stations (different address) ring

Setting the working mode switch for 1st/2nd button

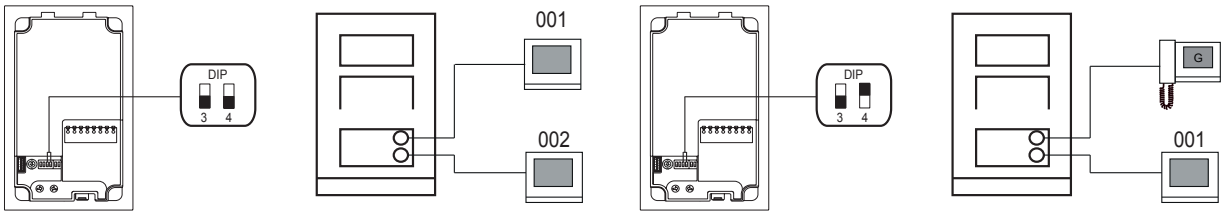

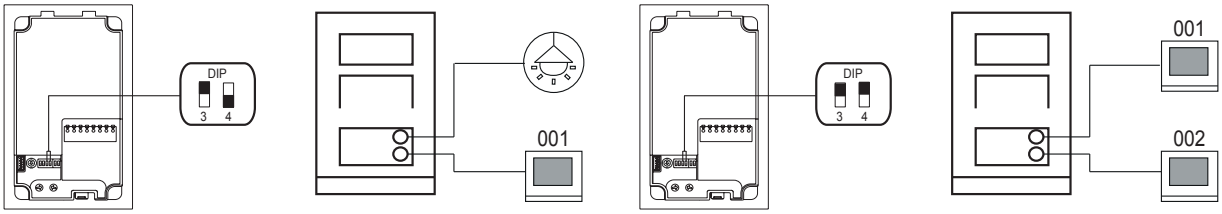

Setting the volume from indoor station to mini outdoor station

The volume from all the indoor stations to mini outdoor station during communication can be set on the sliding switch in case the mini outdoor station is installed in a noisy area.

Setting the video signal format

The setting allows selection of the standard of the video signal of the system, either PAL or NTSC.
OFF = PAL video mode
ON = NTSC video mode

Setting default lock of mini outdoor station

OFF= set (Lock-GND) as default lock
ON= set (COM-NC-NO) as default lock
*Default lock is controlled by "unlock" button on indoor station

Setting of letter box

Thanks to the 2-wire bus, the integration of the ABB-Welcome door communication into letter boxes, doorbell panels and lateral door components is extremely easy. The basic audio module with microphone and loudspeaker is easy to combine with camera and button extension for up to 99 buttons.

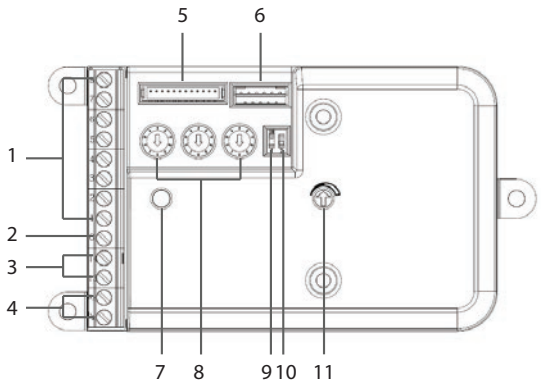

1. Terminals to connect to the mechnical buttons
2. Connecting terminal for common dimensions
3. Relay out (fix as 3s)
4. Bus
5. Connection for camera module
6. Connection for extension unit
7. Microphone adjustment
8. Three rotary switches to set the address
9. Bell button tone on/off
10. Function of 1st/2nd pushbutton
11. Adjust the speaker volume

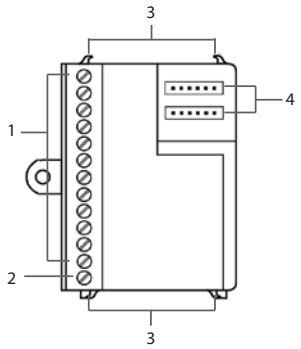

1. Terminals to connect to the mechnical buttons
2. Connecting terminal for common dimensions
3. Clamps for coupling several modules
4. Connections for audio integration unit and further extension unit

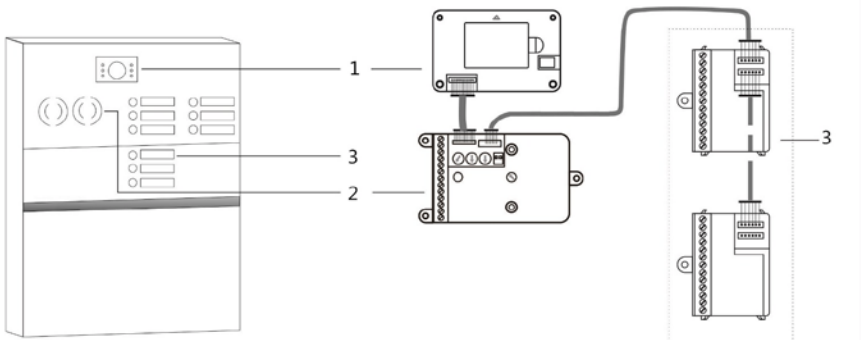

1. Camera integration module
2. Audio integration unit
3. Extension unit

Indoor station

Setting the address of the indoor station: Fig. 04-5

At the indoor stations the apartment is assigned via the setting of the address. Up to 250 apartments can be addressed within an ABB-Welcome system.

For handset indoor station, the address of an indoor station (e.g. "024") is set with the aid of the jumpers "x100", "x10" and "x1" at the indoor stations, where "x100" specifies the hundreds digit (here "0"), "x10" specifies the tens digit (here "2") and "x1" the units digit (here "4"). The jumpers are located at the rear or outside of the indoor stations.

For basic 4.3" hands-free or 4.3 hands-free indoor station, the address of an indoor station (e.g. "024") is set with the aid of the rotary knobs & dip-switches "x200", "x100", "x10" and "x1" at the indoor stations, where "x200" and "x100" specifies the hundreds digit (here "off"), "x10" specifies the tens digit (here "2") and "x1" the units digit (here "4").

Please note that for the 7" hands-free indoor station, if address is more than 99, the setting must be done when entering system setting and "x10" and "x1" is set as "0".

For audio hands-free indoor station, if address is more than 99, it needs to hold "light" button for 3 s to enter system setting and then choose "0", "x1" or "x2".

Setting of the "default outdoor station"

For several outdoor stations in an ABB-Welcome system the "default outdoor station" must be set at the indoor stations and guard unit.
Here the rotary knob STATION is set on the address of the standard outdoor station – between 1 and 9. For handset indoor station, the setting is done with the aid of jumper. The rotary knob or jumper is located at the rear or outside of the indoor stations.

Setting of the master indoor station

In each apartment the switch "M/S" must be activated at one indoor station. This means "M/S=ON". For additional indoor stations in the apartment the switch here must be on "M/S=OFF".
The master/slave setting is on all indoor stations as well as guard unit. The switch is located at the back of the indoor stations and guard unit.

Setting of the terminal resistor

The terminal resistor "RC" in ABB-Welcome audio systems is always switched to "RC=OFF." For video systems, the terminal resistors are to be switched to "RC=ON" for the last devices of a branch and to "RC=OFF" for all others.

The terminal resistors are set via the switch "R/C" on all indoor stations as well as guard unit, video indoor distributors, switch actuator and gateway.

Fig. 04-5

1. Setting of audio handset indoor station

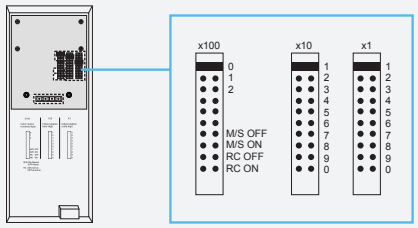

2. Setting of audio hand-free indoor station

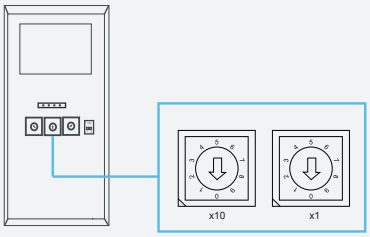

3. Setting of 4.3" video handset indoor station

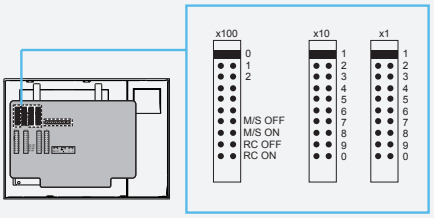

4. Setting of 4.3" video hands-free indoor station

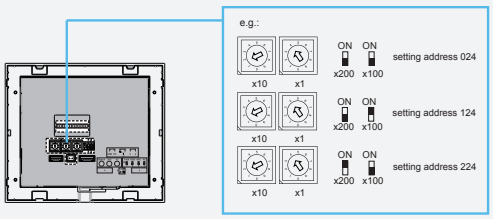

5. Setting of basic 4.3" video hands-free indoor station

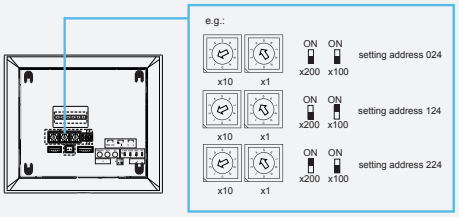

6. Setting of 7" video hands-free indoor station

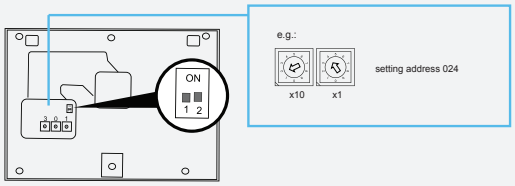

System devices

Setting of the system controller working mode "One on" or "All on"

System working mode "One on" or "All on" is controlled by system controller. If in "One on" mode, when there's an incoming call, all indoor stations in the same apartment ring together, but only master indoor station switches on screen. If in "All on" mode, for incoming call, all indoor stations in the same apartment ring and switches on screen together. (Refer to illustration on page 39.) Fig. 04-6

All indoor stations which are powered by the same system controller follow this rule.

Setting the "MODE" for gateway

At the gateway, the building no. or apartment no. is assigned via the setting of the address according to different working gateway modes.
5 modes are possible to set the function of gateway.

» Building gateway (MODE:1->OFF, 2->OFF, 3->OFF)
-Enable one building as an independent subsystem (outdoor station/guard unit can be connected,) support up to 60 such systems within the whole system.
Refer to page 44. Fig. 04-7

» Floor gateway (MODE:1->OFF, 2->OFF, 3->ON)
-Enable multi-apartments as an independent subsystem (another station can be connected, for example in front of the door of floor with multi-apartments).
Refer to page 45.

» Apartment gateway (MODE:1->OFF, 2->ON, 3->OFF)
- Enable one apartment as an independent sub-system (2nd confirmed outdoor station can be connected), support up to 99 such systems within the whole system.
Refer to page 47

» Additional power supply mode (MODE:1->OFF, 2->ON, 3->ON)
- Enable a system controller to provide additional power source for system.
Refer to page 47.

» Line amplifier (MODE:1->ON, 2->OFF, 3->OFF)
- Strengthen the video signal and extend transmission distance. For increased distance please refer to Page 47.

Fig. 04-6

Setting of working mode on system controller/mini system controller

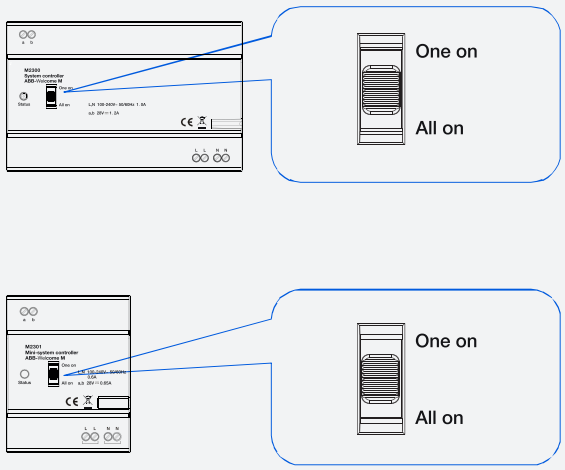

Fig. 04-7

Setting of gateway for different working mode

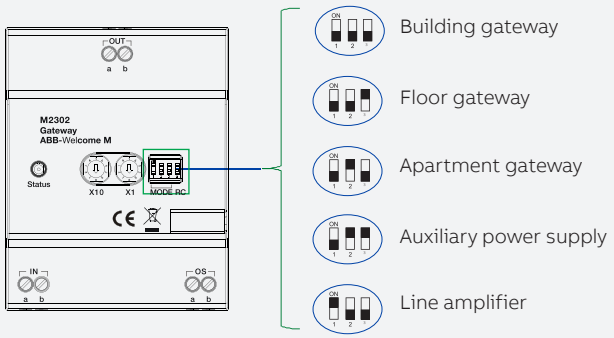

Setting the address of the gateway

At the gateway, the building no. or apartment no. is assigned via the setting of the address according to different working gateway modes. Fig. 04-8

Building gateway - the address is equal to the riser number.
Floor gateway - address is equal to the minimum address of the indoor station inside the sub-system.
Apartment gatewy - address is equal to the apartment number.
There is no need to set address for auxiliary power supply and line amplifier.

Setting the "MODE" for switch actuator Fig. 04-9

3 modes are possible to set the function of switch actuator.

» Call repetition (MODE:2->OFF, 3->OFF)
Switch actuator is enabled upon an incoming call to control an external bell or light. The device is disabled after the call is answered or after a customized time out (adjusted from 1 to 30 seconds).

» Door opener (MODE:2->OFF, 3->ON)
Switch actuator is enabled by pressing unlock button of indoor stations / guard units, to release a lock connected. The device is disabled after a customized time out (adjusted from 1 to 10 seconds).

» Time relay (MODE:2->ON, 3->OFF)
Switch actuator is enabled by pressing program button of indoor stations/guard units or light button of outdoor station in the same sub-system, to release a lock connected or switch on a light. The device is disabled after a customized time out (adjusted from 1 second to 5 minutes).
Please refer to page 51 for the illustration of above function.

Setting the address of the switch actuator

The address of the switch actuators is associated with the outdoor station or indoor station which controls the actuator. Up to 199 switch actuators can be addressed in one system.

The address of a switch actuator (e.g. "001") is set with the aid of the rotary knobs & dip-switch "x100", "x10" and "x1", where "x100" specifies the hundreds digit (here "off"), "x10" specifies the tens digit (here "0") and "x1" the units digit (here "1"). Fig. 04-10

Setting the address of guard unit

The commissioning of guard unit is same as 4.3" video handset indoor station, except the valid address for guard is only 9. Fig. 04-11
User can use the USB connector for the connection to the PC: Download/upload the configuration. e.g. download the contact lists.

Fig. 04-8

Setting address of floor gateway

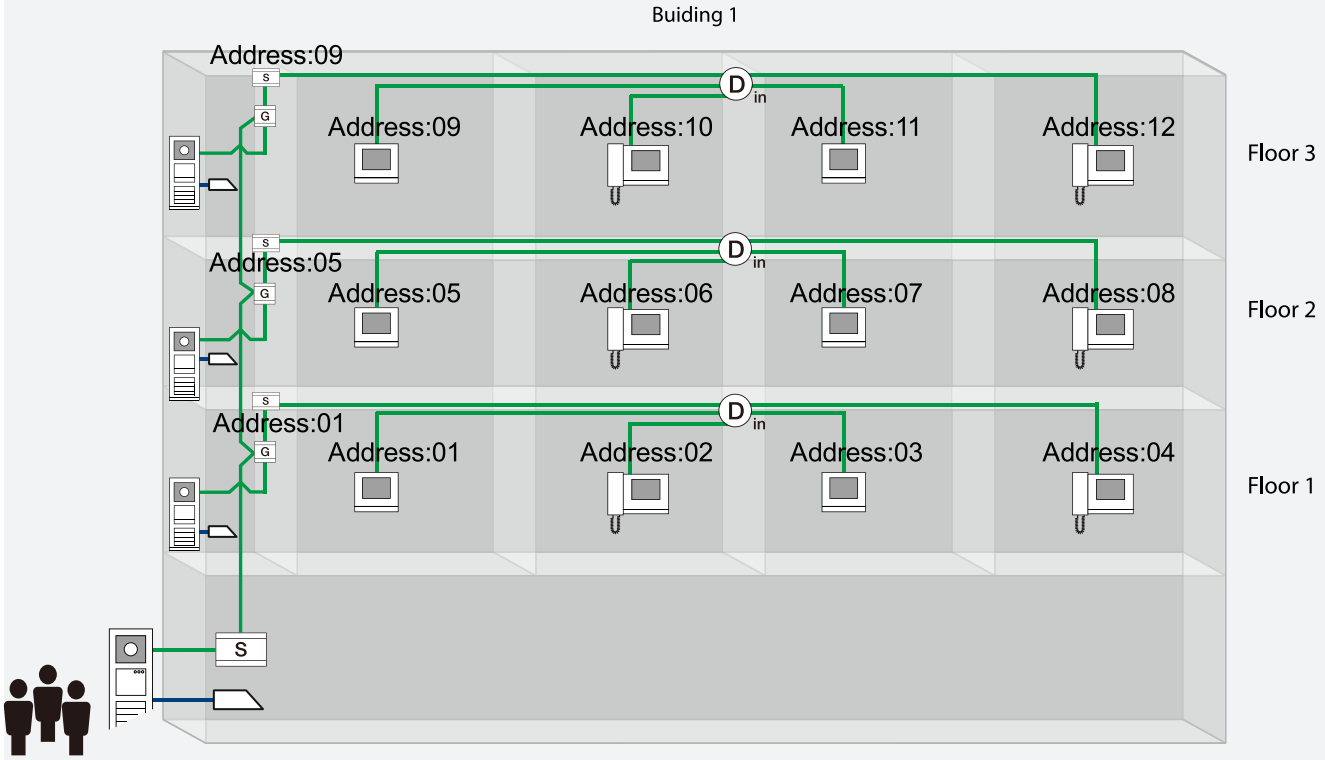

Fig. 04-9

Setting mode of switch actuator

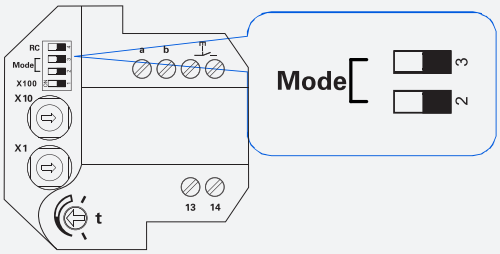

Fig. 04-10

Setting address of switch actuator

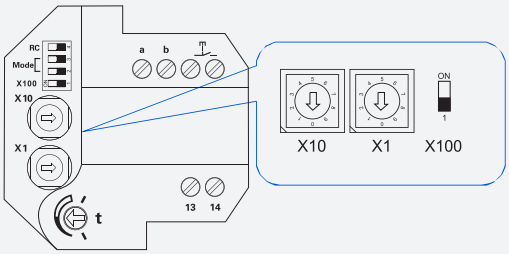

Fig. 04-11

Setting the address of guard unit

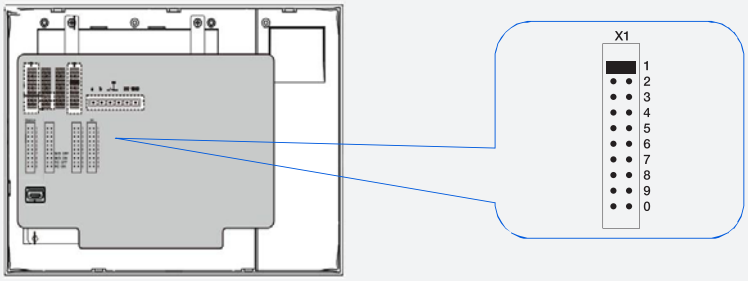

Setting the working mode of camera interface

Mode=1, work as an independent outdoor station.
Camera interface can work as a special video outdoor is numbered orderly as outdoor station(1~9).

Mode=2, work associated with outdoor station.
If an audio/video outdoor station is assigned to the camera interface, the connected external cameras will serve as a system camera, i.e. the external camera is automatically activated with a door call from the assigned outdoor station.
Totally, max. 15 cameras can be set for each outdoor station, including its own cameras.

Mode=3, work associated with guard unit. If a guard unit is assigned to the camera interface, during the communication with indoor station, users can send the video to indoor station captured in the guard unit room.
Totally, max. 15 cameras can be set for each guard unit.

Mode=4, programming mode
During programming mode, outdoor station, guard unit and indoor station can be set to associate with camera interface depending on different applications. For more details, please refer to the online manual.

Setting of camera interface

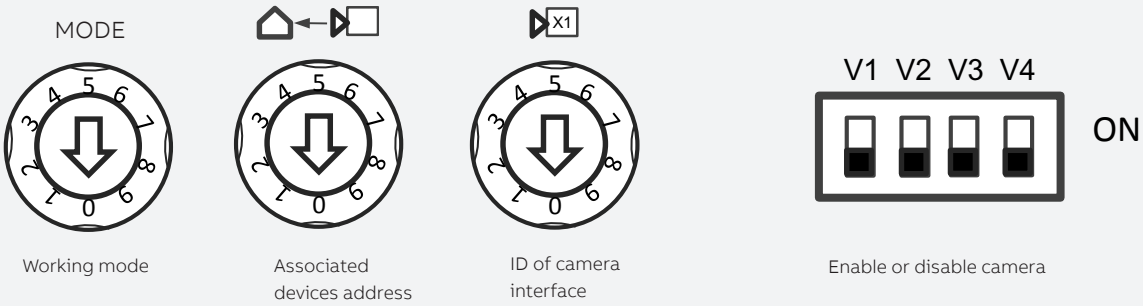

Working mode

Associated devices address

ID of camera interface

Enable or disable camera

Setting the IP-Gateway & App

The IP-Gateway is be configured by the PC, which is connected in the same network with IP-Gateway by a router. User can set the address of the associated indoor station with the IP-Gateway, also the default outdoor station address, and others. Fig. 04-12
Meanwhile, user can set the different permission of each paired APP in the "APP Management" menu. Fig. 04-13
Also, firmware update, data and time setting, configure ComfortTouch and others can be done by the web browser.

Fig. 04-12

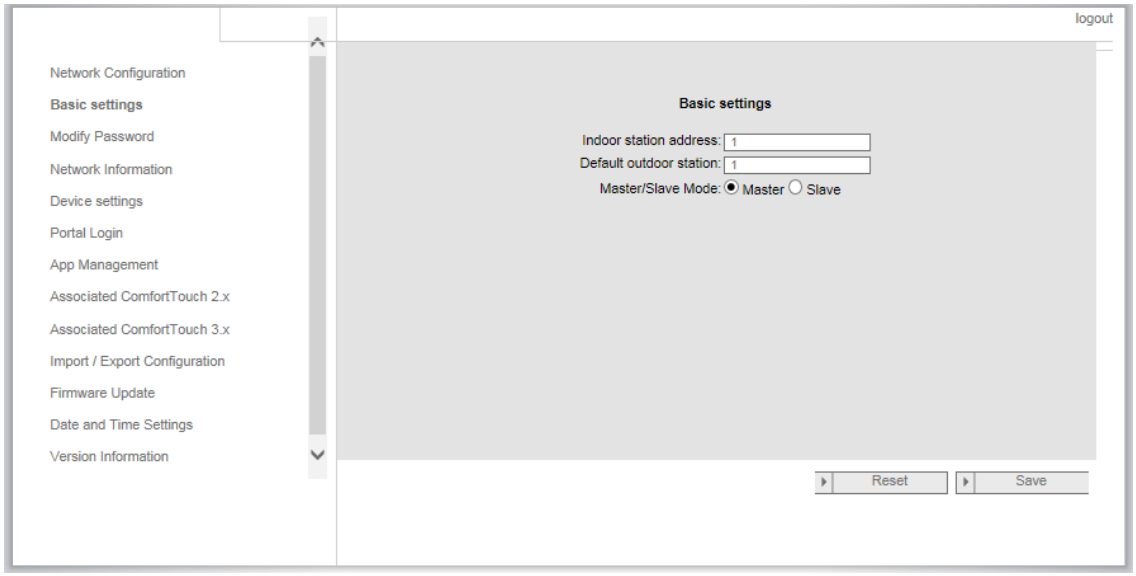

Fig. 04-13

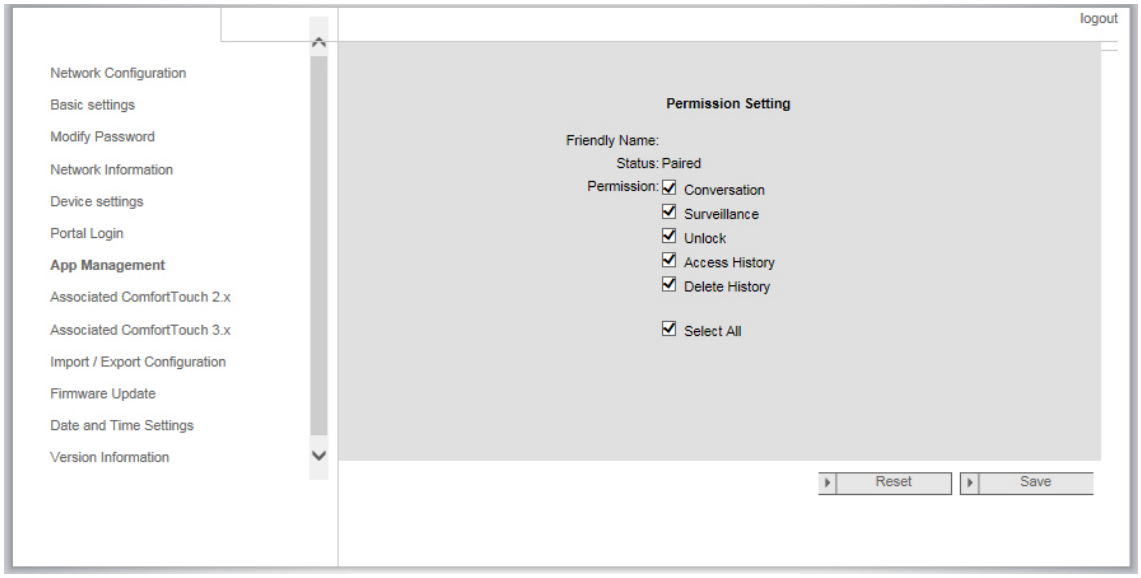

Configurating Telephone gateway via IP-gateway

Via one IP-Gateway, the computer or laptop can configure all parameters of telephone gateway

Fig.04-14

Step1: Enter the homepage

Step2: Searching and setting telephone gateway

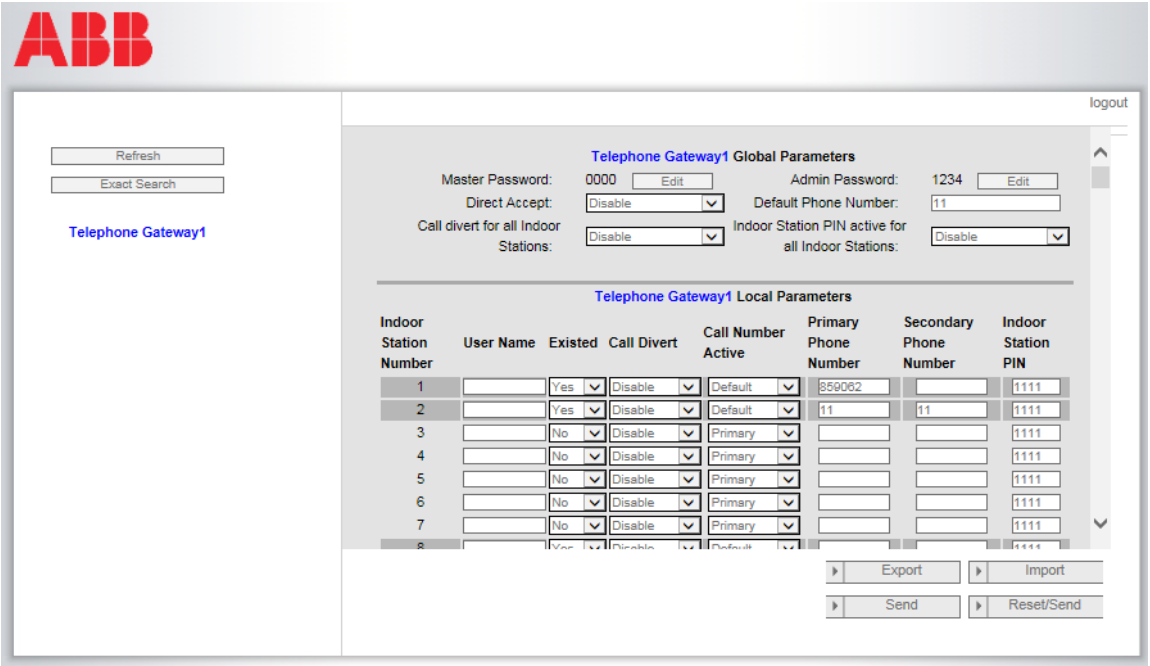

05
Operation

The intuitiveness of ABB-Welcome make learning to operate this system fun and easy. From the initial contact, users will find the system comfortable to use.

Operating the outdoor and indoor stations

The outdoor and indoor stations are operated intuitively. Familiar style elements and easy-to-understand icons are used.
For the 7" all touch and 4.3" hands-free and 4.3" handset indoor station, a menu structure is used.
The functions of all devices are described in the respective operating manuals, which can be scanned from the QR code either from the quick guide or from the screen of the device under "information."

System behavior

Optional connection activation.
The advanced technology of ABB-Welcome system offers the user a large variety of options. A connection can be established by ringing the button at the second-confirmed outdoor station or apartment outdoor station or gate station. It can also be established at the indoor station by switching on the microphone and/or the camera of the outdoor station. A connection lasts at most two minutes after which it is
automatically terminated.

Connection priority.
To guarantee that no call of a visitor is missed at an outdoor station, the following simple rules apply:

- Connections that are established at the outdoor station (second-confirmed outdoor station, apartment outdoor station, gate station or guard unit) always have a higher priority than the connections that are established between two indoor stations-intercom. This means that an existing intercom will be interrupted as soon as the bell is rung from an outdoor station.
- In case an existing connection between outdoor station and indoor station is established, a new connection (intercom) will not be established. However, an occupied status of the system is displayed at the indoor station

Simultaneous connection and setting. Fig. 05-1
To achieve a comfortable user experience, the doorbell button can be rung irrespective of an existing connection between outdoor station and indoor station or between one indoor station and the other indoor stations. In the case of parallel indoor stations in the same apartment, all indoor stations will ring at the same time for the door bell. A third indoor station in the building can still be under setting without interrupting the doorbell existing connection.

Fig. 05-2

Simultaneous connection and setting (1+1+1)

A maximum of one apartment is being called (can be the connection between outdoor station and indoor station, or the indoor station and the other indoor station), one apartment is rung by doorbell button, and one indoor station is under the setting.

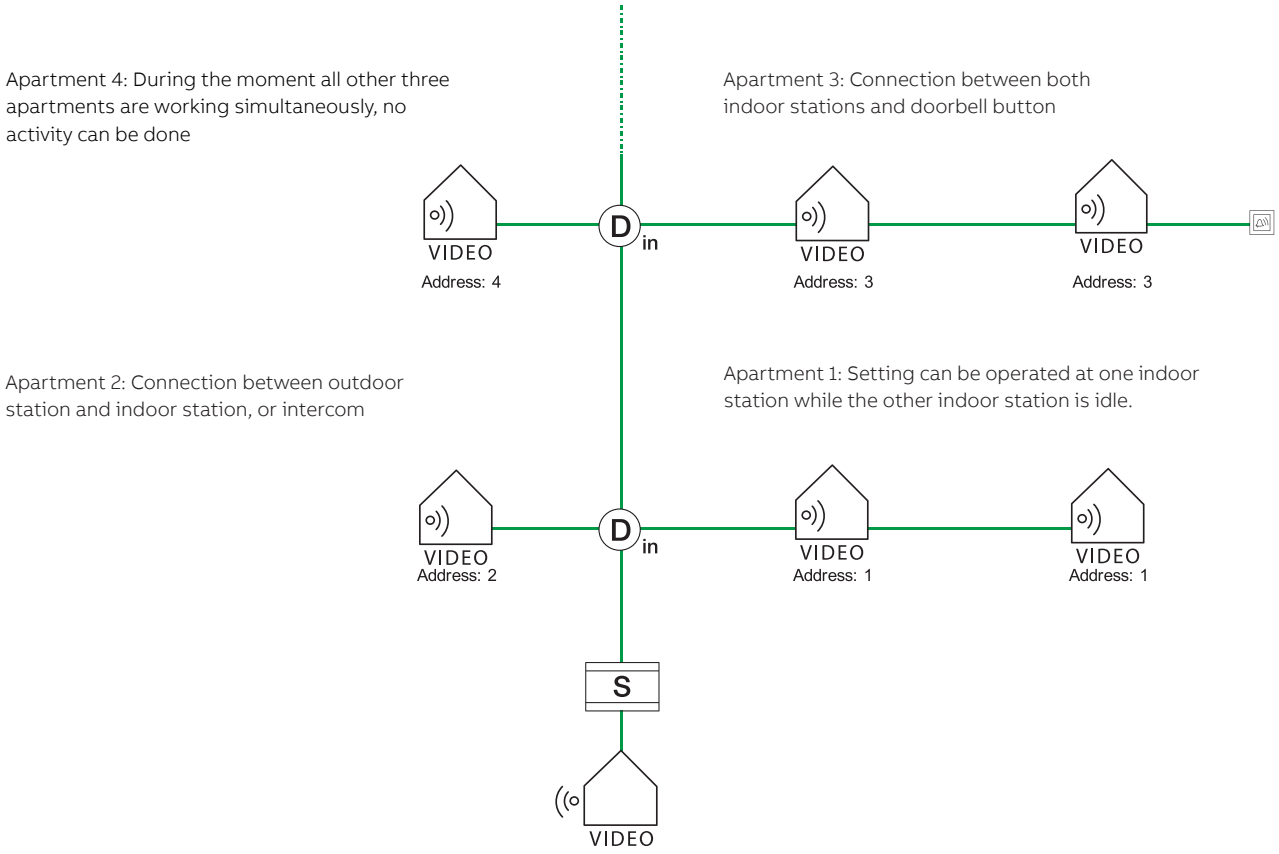

06
Overview of product range

Audio outdoor station, stainless steel

Features

- Clean design with brushed stainless steel
- Surface mounting, flush mounting and cavity wall set
- Different mode setting is possible for pushbutton, such as light switch and calling guard

Technical data

- Dustproof and waterproof as IP 54, vandal proof as IK 07
- Product dimensions:

size 1/2: 200 mm x 125 mm x 39 mm.
size 1/3: 274 mm x 125 mm x 39 mm.

QR code service

Video pushbutton outdoor station, stainless

Features

- Clean design with brushed stainless steel
- Surface mounting, flush mounting and cavity wall set
- Different mode setting is possible for pushbutton, such as light switch and calling guard

Technical data

- Dustproof and waterproof as IP 54, vandal proof as IK 07
- Product dimensions:

size 1/3: 274 mm x 125 mm x 41 mm.
size 1/4: 347 mm x 125 mm x 41 mm.

QR code service

Video keypad outdoor station, stainless steel

Features

- Clean design with brushed stainless steel
- Built-in card reader in display module, support ID card (M21351K-A) and ID card (M21352K-A)
- Surface mounting (41021F and 51021RH needed), flush mounting (41021F needed) and cavity
- Wall set (51021CS needed)

Technical data

- Dustproof and waterproof as IP 54, vandal proof as IK 07
- Product dimensions: 347 mm x 125 mm x 41 mm.

QR code service

Mini outdoor station

Features

- Compact size, surface mounted and flush mounted optional (Mini outdoor station flush-mounted version is available in April, 2017)
- 1 button and 2 button optional
- Clean design with integrated status display
- ID reader in-built optional
- Light switch or calling guard programmable for the 1st button in the 2-button mini outdoor station
- Up to 2 locks connections
- Dedicated intercom without additonal devices in parallel indoor stations within one apartment

Technical data

- Dustproof and waterproof as IP 54, vandal proof as IK 07
- Operation temperature: -40 °C - +70 °C; -40 °F - 158 °F
- Power supply, door opener (Lock-GND): 18 V 4 A impulsive, 250 mA holding
- Floating output: door opener (COM-NC-NO): 30 V AC/DC,1 A
- Single-wire clamps: 2 x 0.28 mm² - 2 x 0.75 mm²
- Fine-wire clamps: 2 x 0.28 mm² - 2 x 0.75 mm²
- Bus voltage: 20-30 VDC

- Product dimensions:
  Surface-mounted: 99 mm width, 168 mm x 99 mm x 26 mm.
  Flush-mounted: 105 mm width, 180 mm x 105 mm x 43 mm
  Pre-installation box: 174 mm x 98 mm x 45 mm

QR code service

Audio outdoor station, aluminum

Features

- The assembled product includes audio module with 1/2 pushbutton (M251022A-A) and 1-module cover frame (51021CF-A)
- Dustproof and waterproof as IP54, and vandal proof as IK07
- Different mode setting is possible for pushbutton, such as 1 call or 2 calls in one row
- Surface mounting (41021F and 51021RH needed) and flush mounting (41021F needed)
- The related tool is also provided in the package

Technical data

- Dustproof and waterproof as IP 54, vandal proof as IK 07
- Product dimension: 128 mm x 125 mm x 40 mm.

QR code service

Video pushbutton outdoor station, aluminum

Features

- The assembled product includes camera module (M251021C), audio module with 1/2 push button (M251022A-A) and 2-module cover frame (51022CF-A)
- Dustproof and waterproof as IP54, and vandal proof as IK07
- Different mode setting is possible for pushbutton, such as 1 call or 2 calls in one row
- Surface mounting (41022F and 51022RH needed) and flush mounting (41022F needed)
- The related tool is also provided in the package

Technical data

- Dustproof and waterproof as IP 54, vandal proof as IK 07
- Product dimensions: 201 mm x 125 mm x 43 mm.

QR code service

Video keypad outdoor station, aluminum

Features

- The assembled product includes camera module (M251021C), audio module with speech synthesis (M251024A-A), keypad module (M251021K-A) and display module (M251021CR/M251022CR)
- Dustproof and waterproof as IP54, and vandal proof as IK07
- Built-in card reader in display module, support ID card (M21351K-A) and IC card (M21352K-A)
- Surface mounting (41024F and 51024RH needed) and flush mounting (41024F needed)

Technical data

- Dustproof and waterproof as IP 54, vandal proof as IK 07
- Product dimensions: 345 mm x 125 mm x 50 mm.

QR code service

Camera module

Features

- Scratch and fire resistant finish
- Video camera with large detection angle (H 86°,V 67°, D 104°) and manually mechanical adjustment (H ± 15°, V ± 15°)
- Anti-fog design with built-in heater
- Built-in infrared lighting ensures clear photos at night
- Secret "surveillance" enables users to surveil one area through the camera of the outdoor station, whose backlight will not be switched on
- Optional to connect one additional output of camera for surveillance inside the video indoor station
- Optional to choose the standard of the video signal, either
  PAL or NTSC (according to the local power frequency) for clear video quality

Technical data

- Dustproof and waterproof as IP 54, vandal proof as IK 07
- Operation temperature: -40 °C - +70 °C; -40 °F - 158 °F
- Bus voltage: 20-30 VDC

QR code service

Audio module

Features

- 1 output for door opener without the need of additional power supply
- 1 output for floating output, door opener (30V AC/DC 1A)
- 1 input for door status check
- 1 input for exit pushbutton
- 2 options: Aluminum brush and white coating
- 4 options: Audio without pushbutton, audio with 1 row of pushbutton, audio with 2 rows of pushbuttons, audio without pushbuttons but with speech synthesis
- 3 LED indications: Call established/system busy, communication possible, door unlocked
- Adjustable feedback ringtone of pushbutton
- Adjustable lock release time
- Adjustable speaker volume
- Integrated optic sensor for day/night mode
- Mode setting for the first/second button as switch on lightings, call indoor station or call guard unit
- Mode setting for pushbutton as single column or double columns

Technical data

- Dustproof and waterproof as IP 54, vandal proof as IK 07
- Operation temperature: -40 °C - +70 °C; -40 °F - 158 °F
- Power supply, door opener (Lock-GND): 18 V 4 A impulsive, 250 mA holding
- Floating output: door opener (COM-NC-NO): 30 V AC/DC,1 A
- Single-wire clamps: 2 x 0.28 mm² - 2 x 0.75 mm²
- Fine-wire clamps: 2 x 0.28 mm² - 2 x 0.75 mm²
- Bus voltage: 20-30 VDC

QR code service

Pushbutton module

Features

- Two options: 3 rows and 4 rows
- Two options: Single column or double columns
- Extractable nameplate by tool without the need to disassemble the panel
- Backlight ensures clear visibility at night
- UV resistant

Technical data

- Dustproof and waterproof as IP 54, vandal proof as IK 07
- Operation temperature: -40 °C - +70 °C; -40 °F - 158 °F
- Bus voltage: 20-30 VDC

QR code service

Round pushbutton module

Features

- 1/2/3 separate push button with even and bright back-lit ensures clear nameplate at night time
- Two versions are avaible for 1/2/3 button: without NFC/IC reader and with NFC/IC reader.
- Nameplate can be taken out by sliding through the end strip with high quality printing name labelling
- Free Android App can be downloaded from Googleplay (so far, no iOS supports this function due to Apple doesn't provide the protocol to the public) to access via smartphone

Technical data

- Dustproof and waterproof as IP 54, vandal proof as IK 07
- Operation temperature: -40 °C - +70 °C; -40 °F - 158 °F
- Bus voltage: 20-30 VDC

QR code service

Keypad module

Features

- Name scrolling by up and down or by inputting letters of the calling name (display must be accompanied, sorting is progressive upon inputting next letter of name)
- The calling code can be numbers only or the combination of numbers and letters
- Call can be activated automatically or by pressing after inputting code
- Download name directory from PC or directly enter to edit from the keyboard
- Up to 3,000 names
- Public password and up to 6,000 customized passwords are allowed
- Repeatedly inputting wrong password will be locked cause lock-out
- Password can be set with 6-8 digits
- Calling code can be set with 1-6 digits
- Call guard unit is available
- Backlight ensures clear visibility at night

Technical data

- Dustproof and waterproof as IP 54, vandal proof as IK 07
- Operation temperature: -40 °C - +70 °C; -40 °F - 158 °F
- Bus voltage: 20-30 VDC

QR code service

Display module

Features

- 2 options for built-in RFID proximity reader: ID card and IC card
- Wiegand output available
- Up to 3,000 different cards
- Register and delete cards locally in settings menu
- Different feedback sounds when accepting or rejecting the reading card
- Customized message is programmable
- Withstands temperatures to -40 °C

Technical data

- Dustproof and waterproof as IP 54, vandal proof as IK 07
- Operation temperature: -40 °C - +70 °C; -40 °F - 158 °F
- Bus voltage: 20-30 VDC

QR code service

Nameplate module

Features

- It can be used to hold the address of the building or the resident directory for keypad outdoor station, or simply to complete the module within the cover frame
- Backlight ensures clear visibility at night

Technical data

- Dustproof and waterproof as IP 54, vandal proof as IK 07
- Operation temperature: -40 °C - +70 °C; -40 °F - 158 °F
- Bus voltage: 20-30 VDC

QR code service

7" video hands-free indoor station

Features

- Large 17.8 cm (7") color display with intuitive touch control
- 6 touch film buttons/6 pushbuttons (available in April, 2017) for communication, unlocking, mute, programmable button (can be set as intercom, call guard unit, etc.), surveillance and setting
- During resident's absence, voice message of the resident will be played automatically in case of door calls, and 3 photos of the visitor will be automatically stored. A total of 300 pcs photos can be stored without SD card. If using SD card, the number of photos is decided by the capacity of the SD card
- Call transfer among different apartments and guard unit is available
- "Doctor" function for automatic unlock
- 5 ringtones for different call sources, i.e. from default outdoor station, secondary outdoor station, doorbell, intercom or guard unit
- Send SOS alarm to guard unit in emergency
- Surface mounting and desktop mounting
- The detailed user manual can be downloaded though scanning the QR code on the screen

Technical data

- Display resolution: 800 x 480
- Display size: 7"
- Operation temperature: -40 °C - +70 °C; -40 °F - 158 °F
- Dustproof and waterproof as IP 30
- Single-wire clamps: 2 x 0.28 mm² - 2 x 0.75 mm²
- Fine-wire clamps: 2 x 0.28 mm² - 2 x 0.75 mm²
- Bus voltage: 20-30 VDC

QR code service

4.3" video hands-free indoor station

Features

- 4.3" color display with OSD
- 6 touch film buttons for communication, unlocking, mute, programmable button (can be set as intercom, call guard unit, etc.), surveillance and setting
- 2 photos of the visitor will be automatically stored in memory for door calls during resident's absence
- A total of 50 pcs photos can be stored (only for induction loop version)
- Call transfer among different apartments and guard unit is available
- "Doctor" function for automatic unlock
- 5 ringtones for different call sources, i.e. from default outdoor station, secondary outdoor station, doorbell, intercom or guard unit
- Broadcast by simply long pressing the communication button
- Surface mounting, flush mounting and desktop mounting
- The detailed user manual can be downloaded though scanning the QR code on the screen

Technical data

- Display resolution: 480 x 272
- Display size: 4.3"
- Operation temperature: -40 °C - +70 °C; -40 °F - 158 °F
- Dustproof and waterproof as IP 30
- Single-wire clamps: 2 x 0.28 mm² - 2 x 0.75 mm²
- Fine-wire clamps: 2 x 0.28 mm² - 2 x 0.75 mm²
- Bus voltage: 20-30 VDC

QR code service

4.3" video handset indoor station

Features

- Slim indoor station with handset (depth of 45 mm)
- 4.3" color display with OSD
- 6 touch film buttons for communication, unlocking, mute, programmable button (can be set as intercom, call guard unit, etc.), surveillance and setting
- 2 photos of the visitor will be automatically stored in memory for door calls during resident's absence
- A total of 25 pcs photos can be stored
- Call transfer among different apartments and guard unit is available
- "Doctor" function for automatic unlock
- 5 ringtones for different call sources, i.e. from default outdoor station, secondary outdoor station, doorbell, intercom or guard unit
- Surface mounting and desktop mounting
- The detailed user manual can be downloaded through scanning the QR code on the screen

Technical data

- Display resolution: 480 x 272
- Display size: 4.3"
- Operating temperature: -10 °C - +55 °C; 14 °F - 131 °F
- Dustproof and waterproof as IP 30
- Single-wire clamps: 2 x 0.28 mm² - 2 x 0.75 mm²
- Fine-wire clamps: 2 x 0.28 mm² - 2 x 0.75 mm²
- Bus voltage: 20-30 VDC

QR code service

Basic 4.3" video hands-free indoor station

Features

- 4.3" display with 6 touch-sensitive buttons & OSD through menu
- "1" button can be customized as room to room intercom, home to home intercom, call guard unit, etc
- 2 photos of the visitor will be automatically stored in memory for door calls during resident's absence.
- A total of 50 pcs photos can be stored ((only for induction loop version)
- "Doctor" function for automatic unlock upon setting
- Allow 5 ringtones to differentiate a call from default OS/ other OS/doorbell/intercom/guard unit
- 5-level adjustable volume
- The ringtone can be one time ringing(3s) or repeated(30s)
- Option to be fitted with induction loop for the deaf
- Mute one indoor station or all indoor stations in the same apartment
- Both surface mounted and desktop mounted (with the desktop bracket) are optional

Technical data

- Display resolution: 480 x 272
- Display size: 4.3"
- Operating temperature: -10 °C - +55 °C;14 °F - 131 °F
- Dustproof and waterproof as IP 30
- Single-wire clamps: 2 x 0.28 mm² - 2 x 0.75 mm²
- Fine-wire clamps: 2 x 0.28 mm² - 2 x 0.75 mm²
- Bus voltage: 20-30 VDC

QR code service

Audio handset indoor station

Features

- 1 easy pushbutton for unlock, and 2 additional buttons for self setting functions, e.g. intercom, door status check, second lock release or even calling the security guard, etc.
- Max-mid-mute volume adjuster on the side
- 2 LEDs to indicate different working status
- 5 ringtones for different call sources, i.e. from default outdoor station, secondary outdoor station, doorbell, intercom or guard unit
- The activating or deactivating of automatic unlock can be made by simply pressing the unlock button for 10 seconds
- Surface mounted

Technical data

- Operating temperature : -10 °C - +55 °C; 14 °F - 131 °F
- Dustproof and waterproof as IP 30
- Single-wire clamps: 2 x 0.28 mm² - 2 x 0.75 mm²
- Fine-wire clamps: 2 x 0.28 mm² - 2 x 0.75 mm²
- Bus voltage: 20-30 VDC

QR code service

Audio hands-free indoor station

Features

- Four quick-access keys for the basic functions: communication, door opener, programmable button and mute function
- Light button can be programmed as room to room intercom, call guard unit, etc
- Doctor function for automatic unlock upon setting
- Mute one indoor station or all indoor stations in the same apartment
- Support up to 250 addresses
- Allow 5 ringtones to differentiate a call from default OS / other OS / door bell /intercom / guard unit
- 5-level adjustable volume
- The ringtone can be fixed or cycled

Technical data

- Operating temperature : -10 °C - +55 °C ;-14 °F - 131 °F
- Dustproof and waterproof as IP 30
- Single-wire clamps: 2 x 0.28 mm² - 2 x 0.75 mm²
- Fine-wire clamps: 2 x 0.28 mm² - 2 x 0.75 mm²
- Bus voltage: 20-30 VDC

QR code service

System controller

Features

- Controls the entire system, the "brain" of the individual system
- Over-heat protection, over-current protection, lightning protection
- Two working modes to switch between "all on" and "one on"
- 1 LED for normal working condition indication
- Overheat, short-circuit and lightning protection
- As auxiliary BUS power supply when connecting to gateway under certain modes

Technical data

- Operating temperature: -25 °C - +55 °C; -13 °F - 131 °F
- Dustproof and waterproof as IP 20
- Single-wire clamps: 2 x 0.28 mm² - 2 x 1 mm²
- Fine-wire clamps: 2 x 0.28 mm² - 2 x 1 mm²
- Mains voltage: 100-240 V, 50 / 60 Hz, 1.0 A
- Bus voltage: 28 ± 2 VDC, 1.2 A
- Size: 8 U

QR code service

Mini system controller

Features

- Controls the entire system, the "brain" of the individual system
- Over-heat protection, over-current protection, lightning protection
- Two working modes to switch between "all on" and "one on"
- 1 LED for normal working condition indication
- Overheat, short-circuit and lightning protection
- As auxiliary BUS power supply when connecting to gateway under modes

Technical data

- Operating temperature: -25 °C - +55 °C; -13 °F - 131 °F
- Dustproof and waterproof as IP 20
- Single-wire clamps: 2 x 0.28 mm² - 2 x 1 mm²
- Fine-wire clamps: 2 x 0.28 mm² - 2 x 1 mm²
- Mains voltage: 100-240 V, 50 / 60 Hz, 0.6 A
- Bus voltage: 28 ± 2 VDC, 0.65 A
- Size: 4 U

QR code service

Gateway

Features

» It offers 5 different modes which can be set by dipswitch: apartment gateway, floor gateway, building gateway, auxiliary BUS power supply interface and line amplifier

Technical data

» Operating temperature: -25 °C - +55 °C; -13 °F - 131 °F
» Dustproof and waterproof as IP 20
» Single-wire clamps: 2 x 0.28 mm² - 2 x 0.75 mm²
» Fine-wire clamps: 2 x 0.28 mm² - 2 x 0.75 mm²
» Bus voltage: 20-30 VDC

QR code service

Video outdoor distributor

Features

» 2 way inputs connect different outdoor stations
» Used in buildings with more than one video outdoor station

Technical data

» Operating temperature: -25 °C - +55 °C; -13 °F - 131 °F
» Dustproof and waterproof as IP 20
» Single-wire clamps: 2 x 0.28 mm² - 2 x 0.75 mm²
» Fine-wire clamps: 2 x 0.28 mm² - 2 x 0.75 mm²
» Bus voltage: 20-30 VDC
» Size: 2U

QR code service

Guard unit

Features

- 4.3" touch screen and 6 touch film buttons can ensures efficient communication with calls from outdoor station, indoor station or other guard unit (if any)
- It can be manually or automatically set into intercept mode to increase security level for all users or VIPS only
- Surveillance can be done through the outdoor station camera or integrated analog camera
- Missed calls and alarm messages stored in the memory can be reviewed
- It can be surface mounted on the wall or desktop mounted

Technical data

- Display resolution: 480 x 272
- Display size: 4.3"
- Operating temperature: -10 °C - +55 °C; 14 °F - 131 °F
- Dustproof and waterproof as IP 30
- Single-wire clamps: 2 x 0.28 mm² - 2 x 0.75 mm²
- Fine-wire clamps: 2 x 0.28 mm² - 2 x 0.75 mm²
- Bus voltage: 20-30 VDC

QR code service

Video distributor

Features

- This compact device supports 4-way outputs connected to different apartments or different high-rise buildings
- Flush-mounted into VDE/Italian box or surface mounted through the hole in the middle

Technical data

- Operating temperature: -25 °C - +55 °C; -13 °F - 131 °F
- Dustproof and waterproof as IP 20
- Single-wire clamps: 2 x 0.28 mm² - 2 x 0.75 mm²
- Fine-wire clamps: 2 x 0.28 mm² - 2 x 0.75 mm²
- Bus voltage: 20-30 V

QR code service

Switch actuator

Features

- 1 output for connecting an electronic lock or light
- 1 output for local pushbutton
- 3 working modes: extend doorbell, switch on lighting, door lock release
- The switching duration of unlock or switch on lighting is adjustable
- Flush-mounted

Technical data

- Operating temperature: -25 °C - +55 °C; -13 °F - 131 °F
- Dustproof and waterproof as IP 30
- Single-wire clamps: 2 x 0.28 mm² - 2 x 0.75 mm²
- Fine-wire clamps: 2 x 0.28 mm² - 2 x 0.75 mm²
- Floating output for light: 230 V AC, 3 AX
- Floating output for door opener: 30 V AC/DC; 3 A
- Bus voltage: 20-30 VDC

QR code service

Camera interface

Features

- Support up to 4 analog 3rd party cameras for one device
- Can transfer the image from guard unit to the indoor station
- Can connect to 3rd party camera to the existing audio system
- Support the camera for viewing the area of the floor (for example with the connection from IS to camera interface, which connects the analog camera)
- Support the input and output of video signal of outdoor station to 3rd party VDR during the call, which can be viewed from the video indoor station
- Support IP Gateway image remote surveillance to all the connected OS and 3rd party camera
- Support the installation in DIN, surface mounted

Technical data

- Operating temperature : -25 °C - +55 °C ;-13 °F - 131 °F
- Dustproof and waterproof as IP 30
- Single-wire clamps: 2 x 0.28 mm² - 2 x 0.75 mm²
- Fine-wire clamps: 2 x 0.28 mm² - 2 x 0.75 mm²
- Bus voltage: 20-30 VDC
- Video input: 1 Vp-p, PAL/NTSC
- Video output: 1 Vp-p@75Ω, PAL/NTSC
- Camera interface to camera:

Coax cables: max. 100 m
Other cables: max. 10-50 m

QR code service

Telephone gateway

Features

- Can be used in residential and commercial installations
- One telephone gateway per apartment / company as indoor station
- Telephone Gateway is connected to PBX (private branch exchange)
- Telephone and mobile phone can be used as "audio indoor station"
- Call forward to other landline phone or mobile phones per configuration in the PBX

Technical data

- Operating temperature: -25 °C - +55 °C; -13 °F - 131 °F
- Dustproof and waterproof as IP 20
- Single-wire clamps: 2 x 0.28 mm² - 2 x 0.75 mm²
- Fine-wire clamps: 2 x 0.28 mm² - 2 x 0.75 mm²
- Telephone line clamps: 0.2 mm² -1.5 mm²
- Bus voltage: 20-30 VDC
- Size: 4U

QR code service

IP-gateway

Features

Enables smartphones and tablet (iOS and Android) by installing the ABB-Welcome APP as virtual video indoor station.

- Both WIFI and remote access under 3G/4G through internet service provider.
- IP Gateway acts as PC interface for efficiently programing telephone gateway.
- *Enables the integration with ABB Comfort touch as indoor station.
- *Supports to monitor multi-cameras connected with camera interface
- *Supports intercom call, including home to home & room to room call by ABB-Welcome APP
- *Supports to communicate with guard unit by ABB-Welcome APP
- *Supports to control relay actuator, and one actuator can be activated during the call if necessary by ABB-Welcome APP
- *Supports to control two locks during the call by ABB-Welcome APP
- *Supports to make a SOS call if there is emergency by ABB-Welcome APP
- *Notification function of APP is available whatever APP is open in foreground, background or even closed totally.

(*: ABB-Welcome APP (ABB logo) with above new features can be downloaded in Q1, 2017)

Technical data

- Operating temperature: -25 °C - +55 °C; -13 °F - 131 °F
- Dustproof and waterproof as IP 20
- Single-wire clamps: 2 x 0.28 mm² - 2 x 0.75 mm²
- Fine-wire clamps: 2 x 0.28 mm² - 2 x 0.75 mm²
- Bus voltage: 20-30 VDC
- Size: 10U

QR code service

Lift control relay module

Features

- Enhance security to allow authorized visitor/resident to ONLY go to the designated floor while unauthorized visitor can not activate any floor button in the lift.
- Efficient programming through PC by dedicated commissioning software
- Each module supports up to 16 floors, total up to 15 modules can be cascaded with one M adaptor

Technical data

- Operating temperature: -25 °C - +55 °C; -13 °F - 131 °F
- Dustproof and waterproof as IP 20
- Single-wire clamps: 2 x 0.28 mm² - 2 x 0.75 mm²
- Fine-wire clamps: 2 x 0.28 mm² - 2 x 0.75 mm²
- Bus voltage: 20-30 VDC

QR code service

Letter box modules

Features

- For the integration into letter boxes and bell systems of different manufacturers, and make audio/video communication possible
- Can be extended to a maximum of 99 inputs for doorbell push-switches with the aid of the built-in keypad extension
- Light switch or calling guard programmable for the 1st/2nd button
- For audio integration unit, built-in relay for operating the door opener and adjustable volume
- In case 8 bells are not enough for the audio integration module, the 12-bell extension module can be connected

Technical data

- Dustproof and waterproof as IP xx, depend on the related installation
- Operation temperature: -25 °C - +55 °C; -13 °F - 131 °F
- Floating output for door opener : 30 V AC/DC,3 A
- Single-wire clamps: 2 x 0.28 mm² - 2 x 0.75 mm²
- Fine-wire clamps: 2 x 0.28 mm² - 2 x 0.75 mm²
- Bus voltage: 20-30 VDC

QR code service

DIN-rail adaptor

Features

- One DIN rail adaptor fit for all the flush mounted devices: video distributor, switch actuator, and camera interface
- Adjustable and consistent looking cover can be taken out in case of need

Technical data

- Size: 4U

2-wire adaptor and PC management software

Features

- 2-wire adaptor supports to connect PC with management software into 2-wire DES system
- PC management software supports centralized management of user card no./user names/logic addresses, registration/deletion/change.
- PC management software records system logs, e,g unlock log, SOS log.
- PC management software supports to configure lift control modules.

  (Phase 1 version is available in Dec, 2016, which supports the building system without floor system, which means floor gateway mode should not be used)

Technical data

- 2-wire adaptor dimension: 90 mm x 180 mm x 65 mm

External camera

Features

» Analogue camera solutions for the camera interface from the ABB-Welcome range
» Three types are optional for different application, normal camera/dome camera/mini dome camera
(Available in December, 2016)

Technical data

» Image Sensor: 1/3” 1.3 MP SONY Exmor CMOS.
» Effective Pixels: 1305 (H) × 1049 (V).
» Resolution: 700 TVL
» Horizontal detection angle:
30-90 ° (manually adjustable for video camera and dome camera);
75 °(fixed for mini dome camera)
» S/N Ratio: ≥50 dB
» Min. illumination (Day): 0.01 Lux @ F2.0
» Min. illumination (Night): 0 Lux @ F2.0
» Video signal: 1 x CVBS, 1Vpp, 75 Ohm (Cinch)
» White Balance: AWB, 1800-10800 K
» Lens: 2.8-12 mm (manually adjustable for video camera and dome camera);
3.6 mm (fixed for mini dome camera)
» IR Range: 50 m (video camera),
40 m (dome camera),
30 m (mini dome camera)
» Input Voltage: 12±10% VDC
» Dustproof and waterproof as IP66
» Product dimensions:
Video camera: 286 mm x 86 mm x 77 mm
Dome camera:130 mm x 119 mm x 104 mm
Mini dome camera: 105 mm x 94 mm x 83 mm

07
Connection

ABB-Welcome system can be easily and quickly connected to all kinds of buildings. The following examples of terminal diagrams provide optimum orientation and ensure effective installation.

Fig. 07-1

Single-family house, audio/video

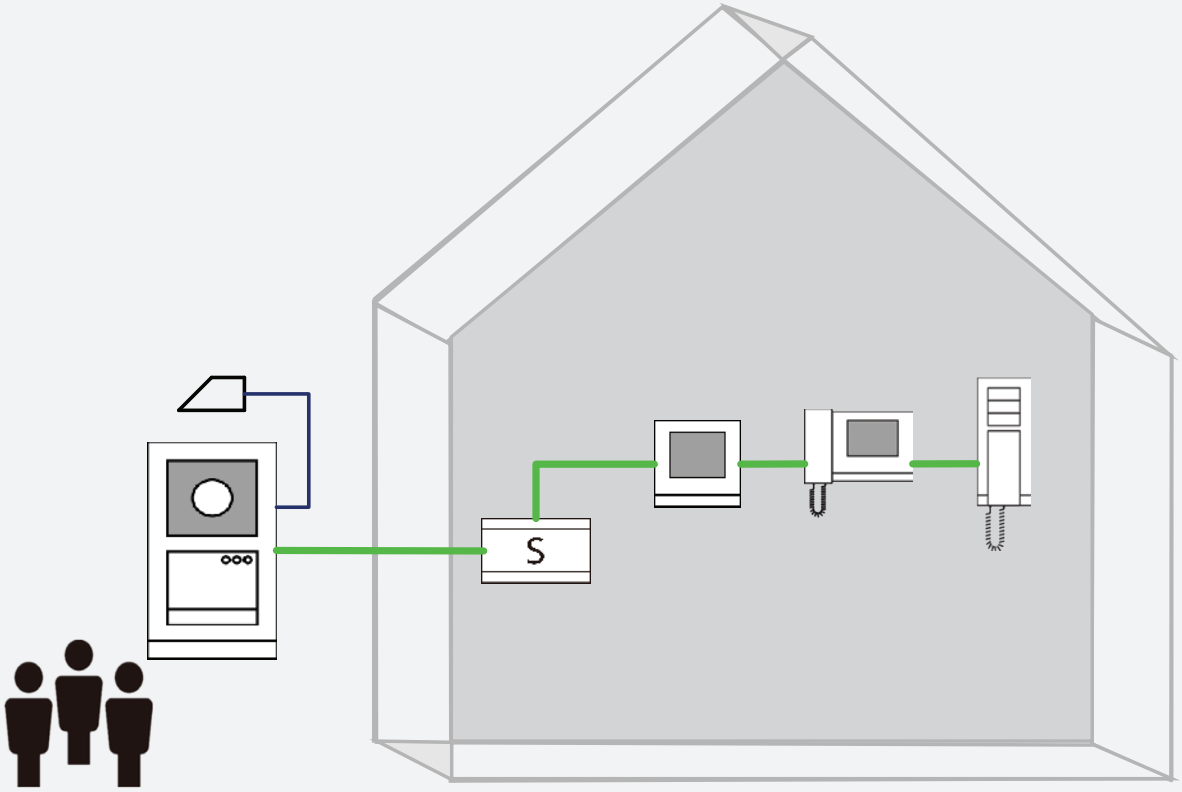

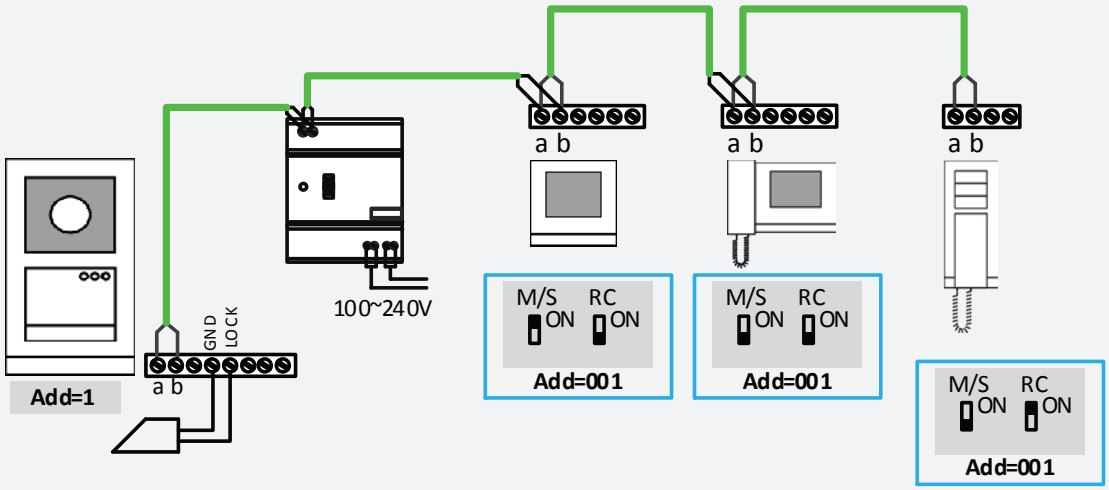

Fig. 07-2

Multi-family building, audio

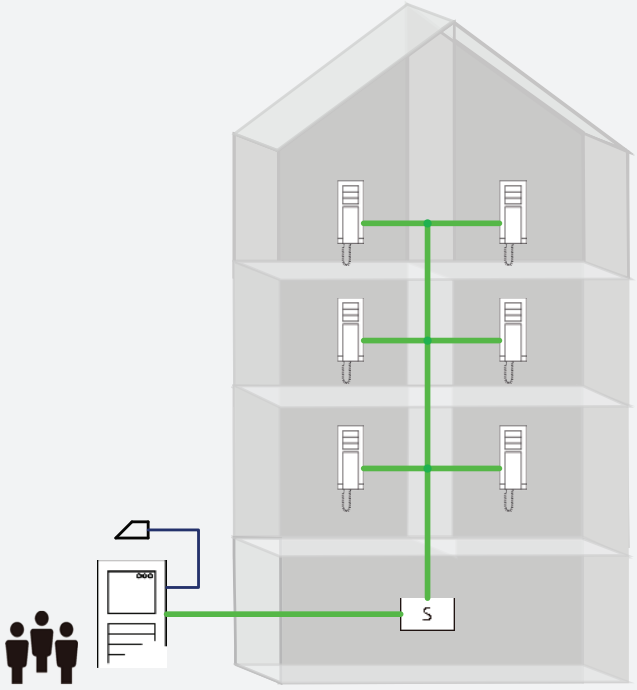

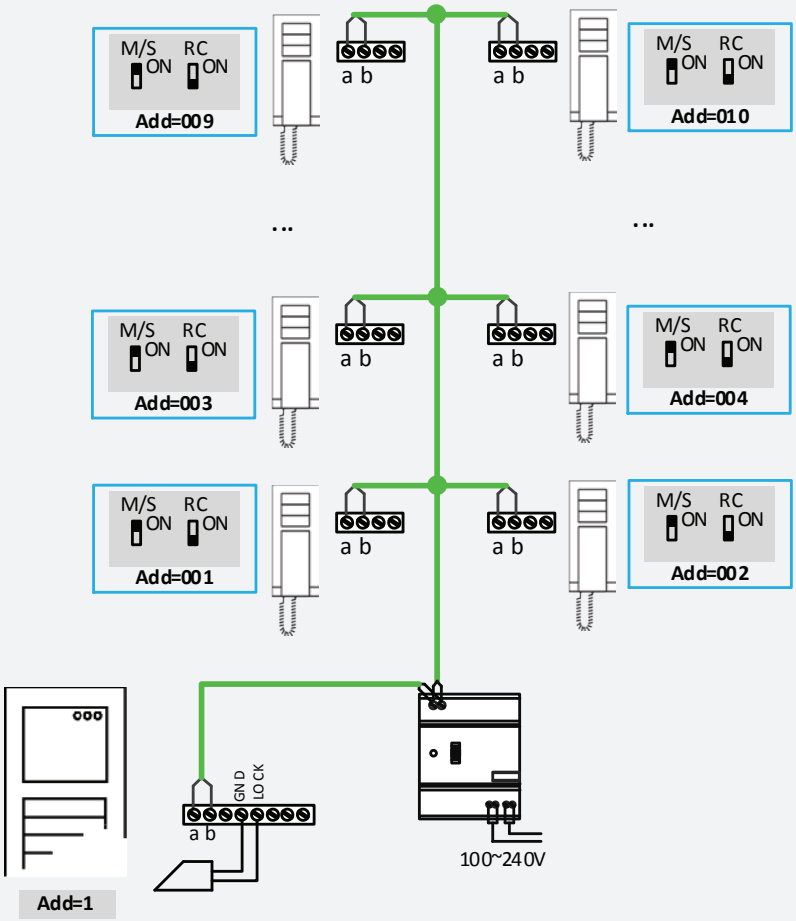

Fig. 07-3

High rising building, audio/video

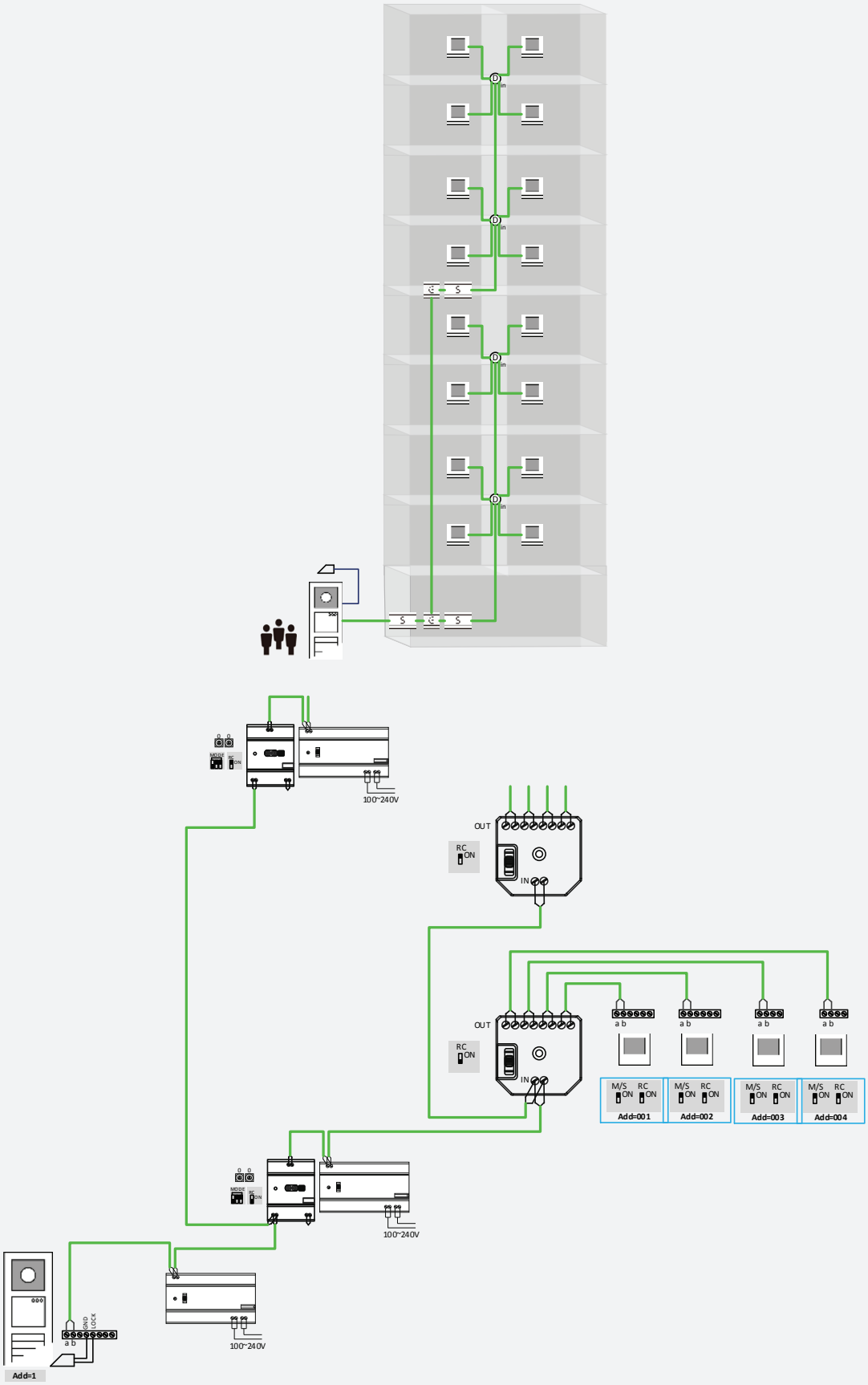

Fig. 07-4

Group of villas, audio/video

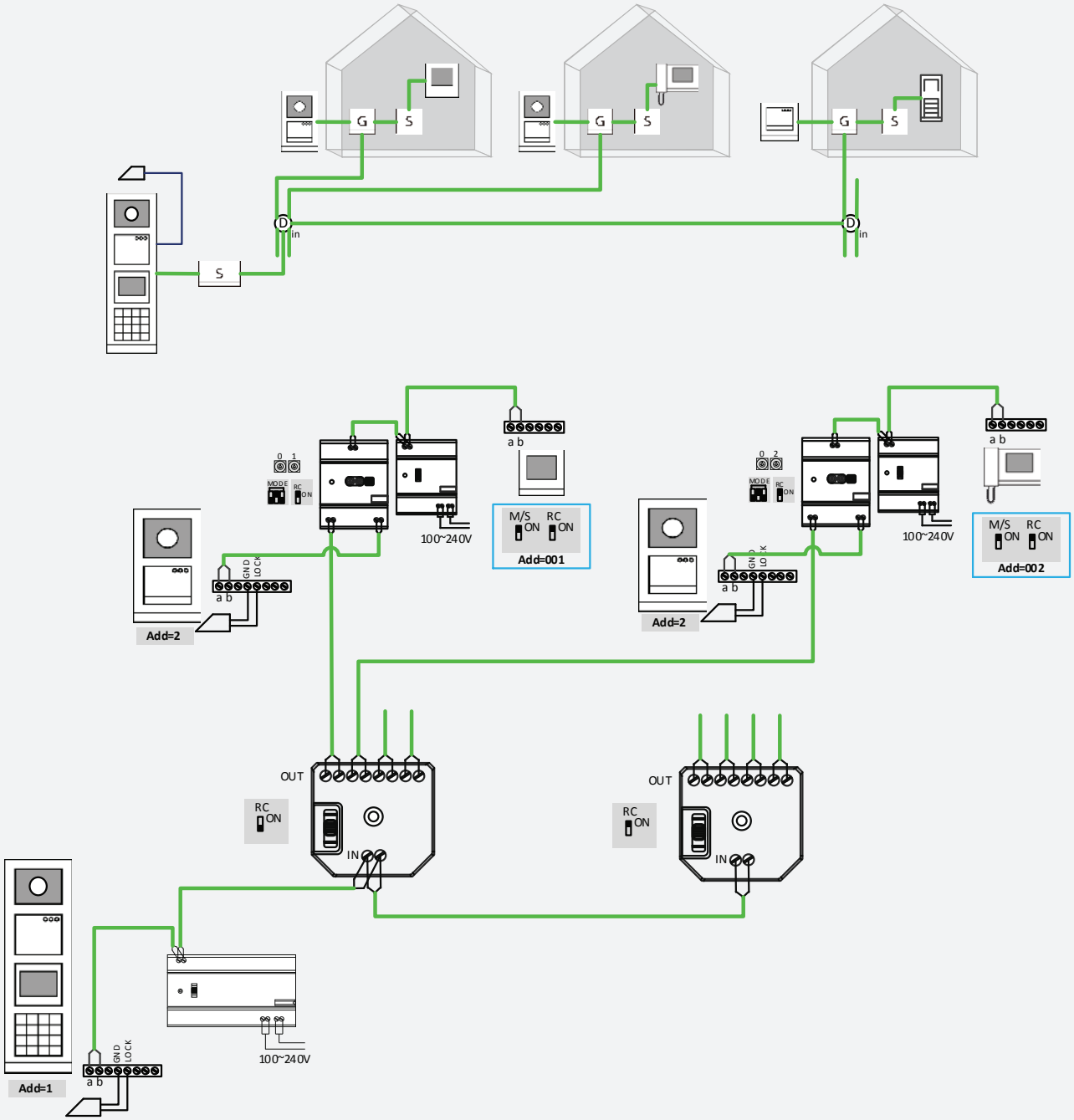

Fig. 07-5

High-rise building with floor entrance, video

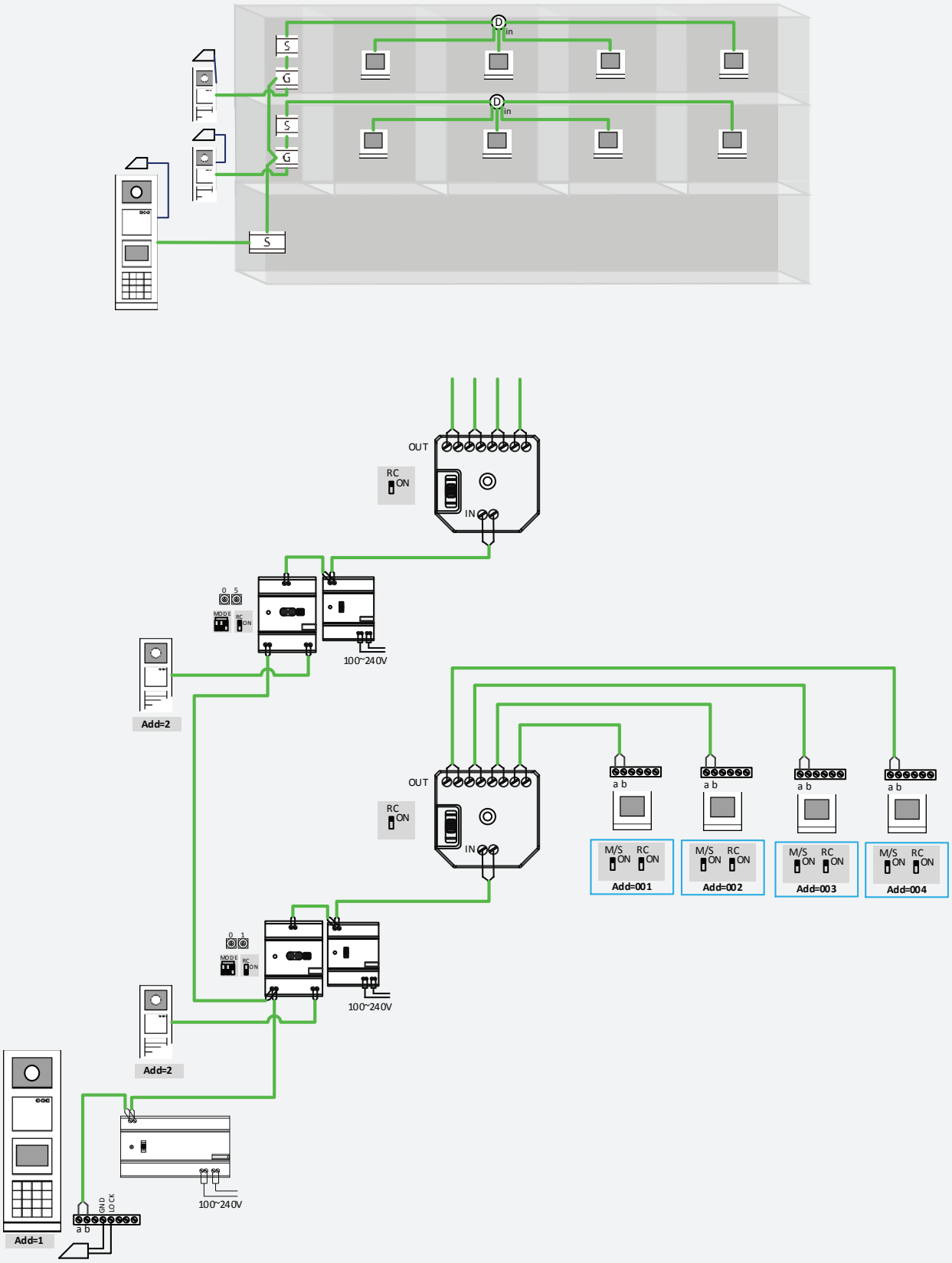

Fig. 07-6

Residential complexes, audio/video

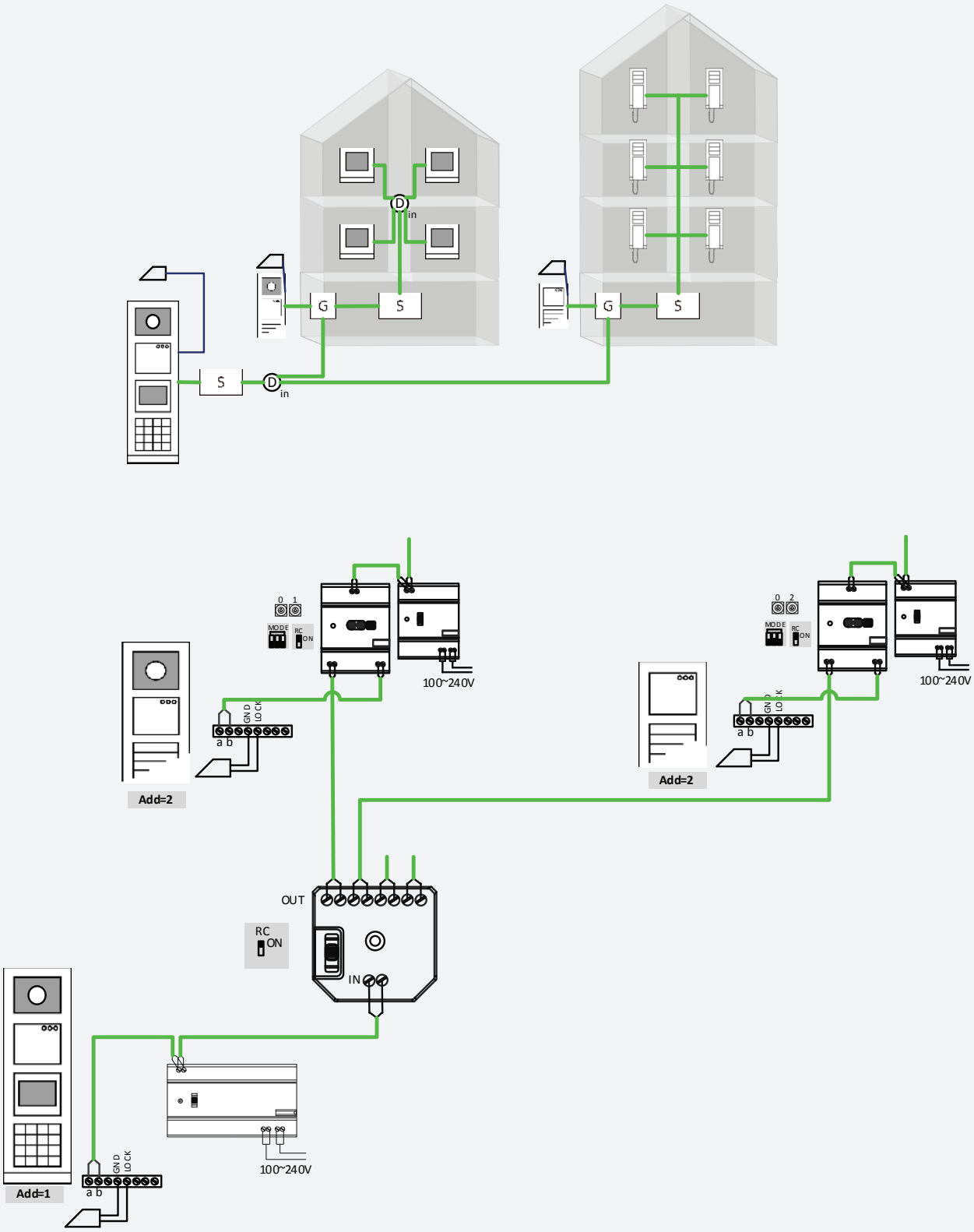

Fig. 07-7

Commercial objects, audio/video

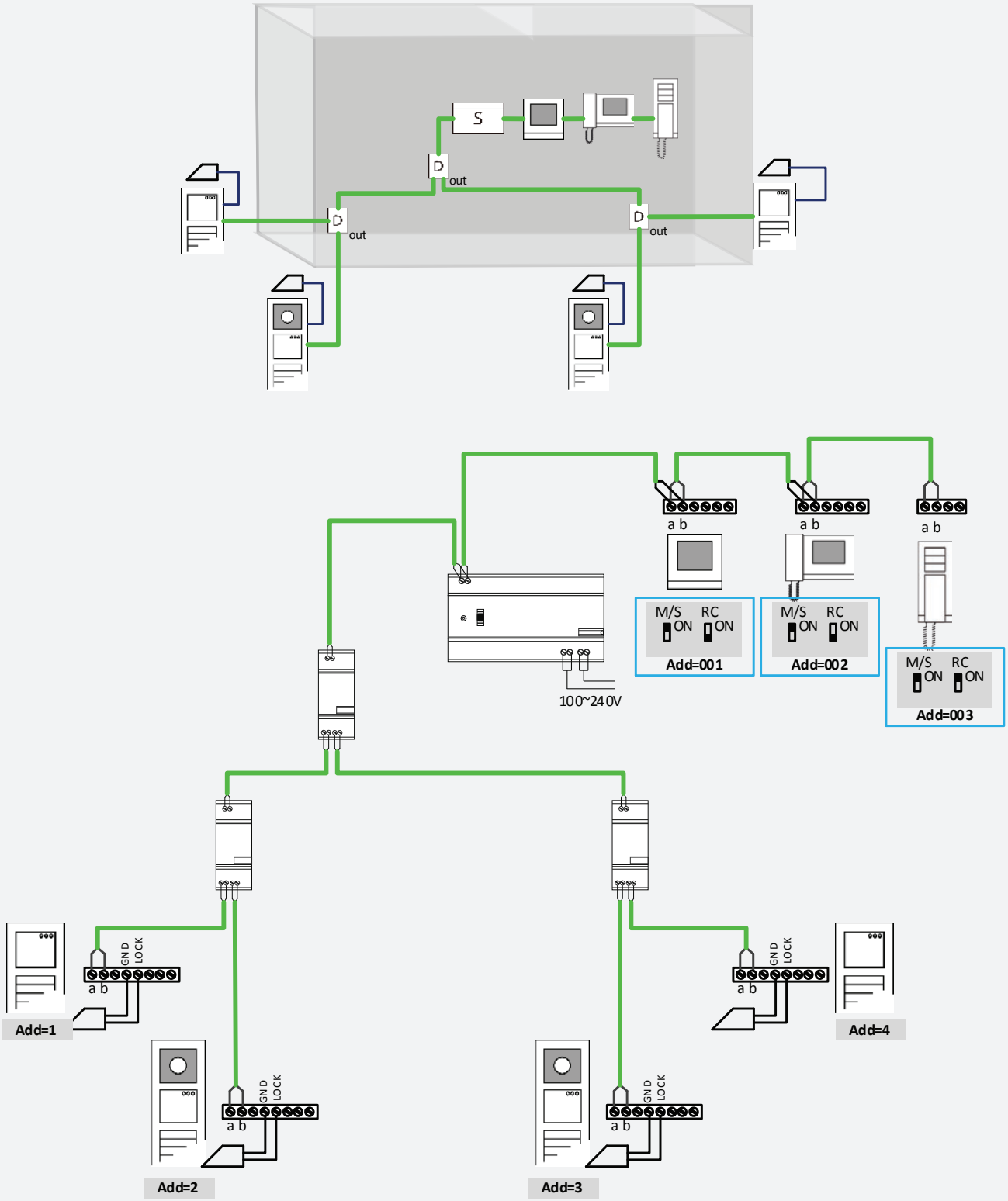

Fig. 07-8

Single family, with multi-camera

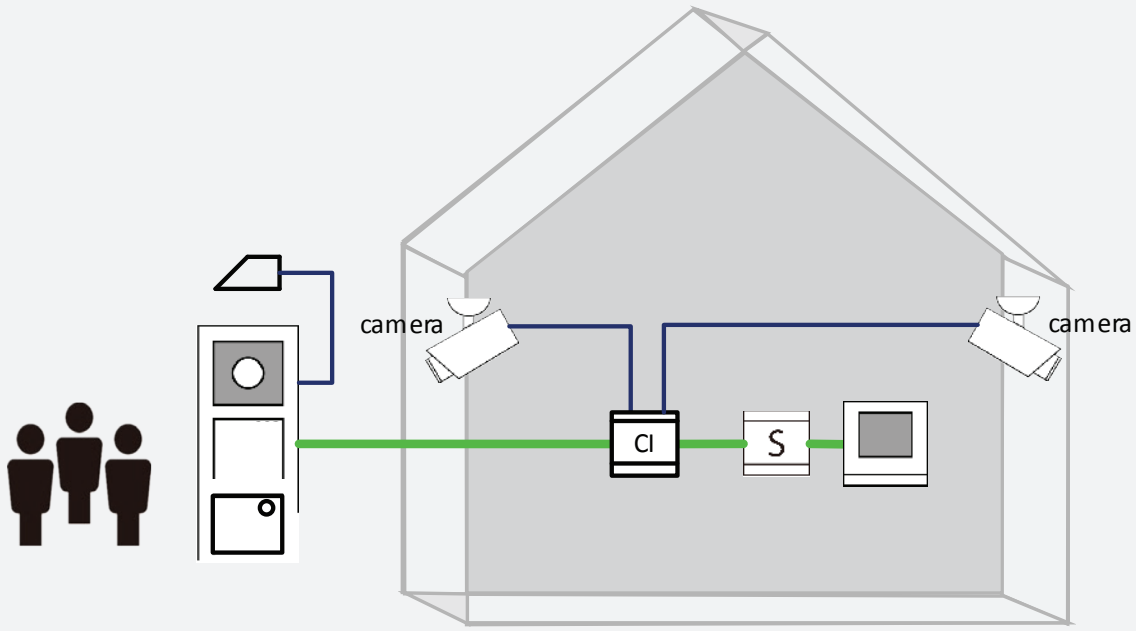

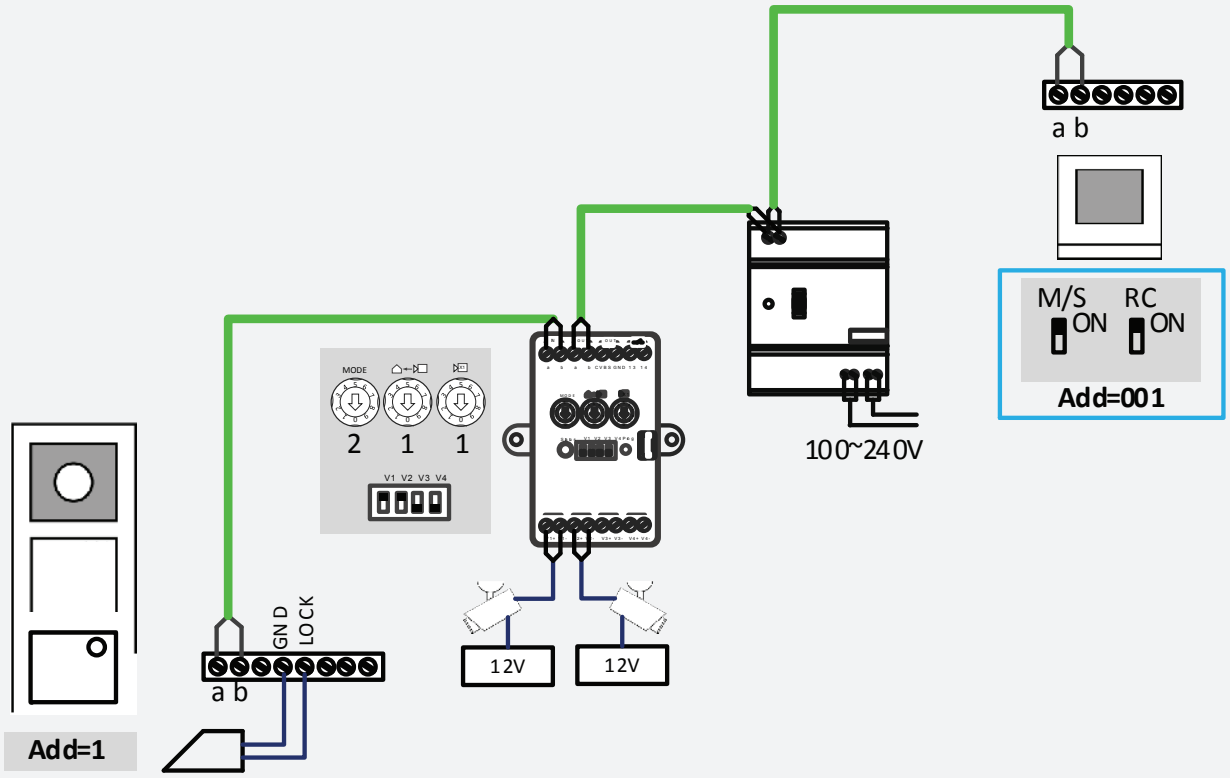

Fig. 07-9

Multi-family building, extend telephone as indoor station

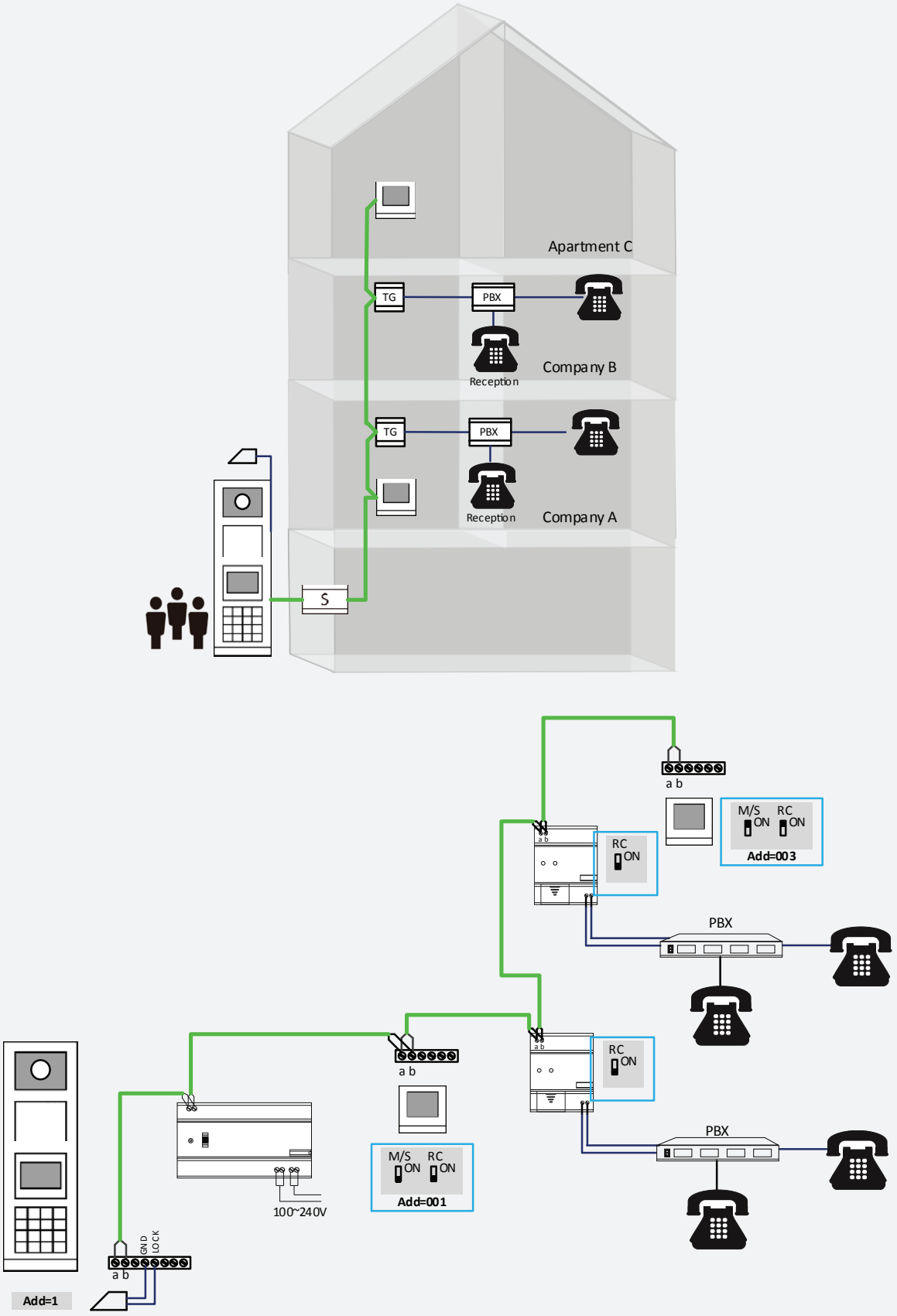

Fig. 07-10

Single family, extend mobile phone as indoor station

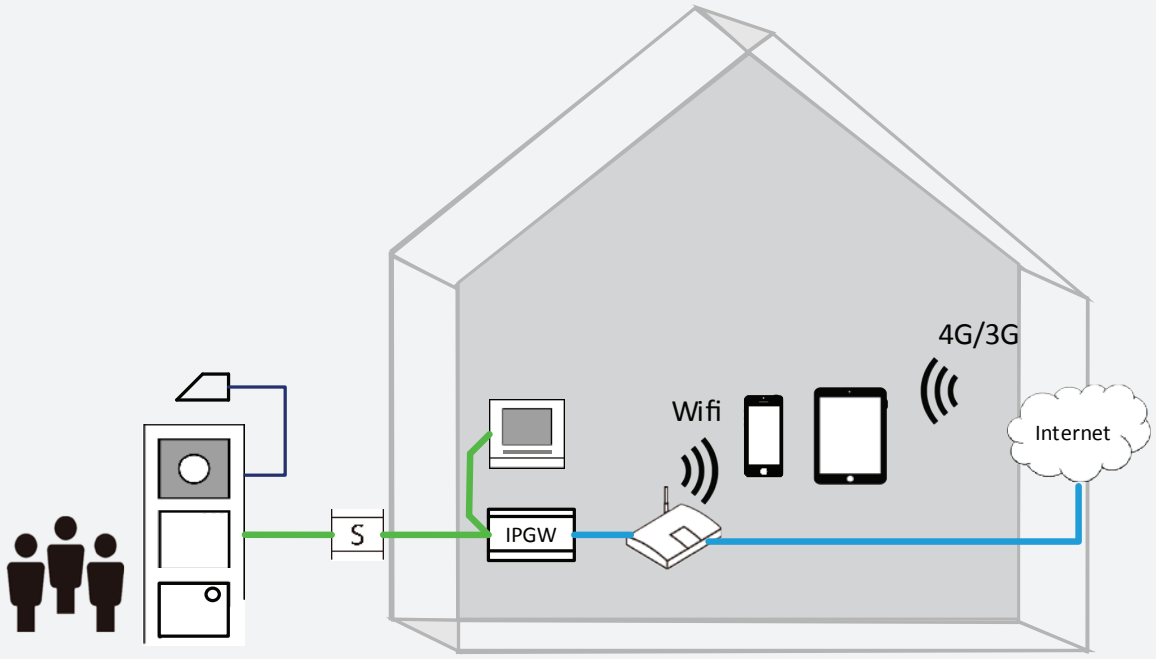

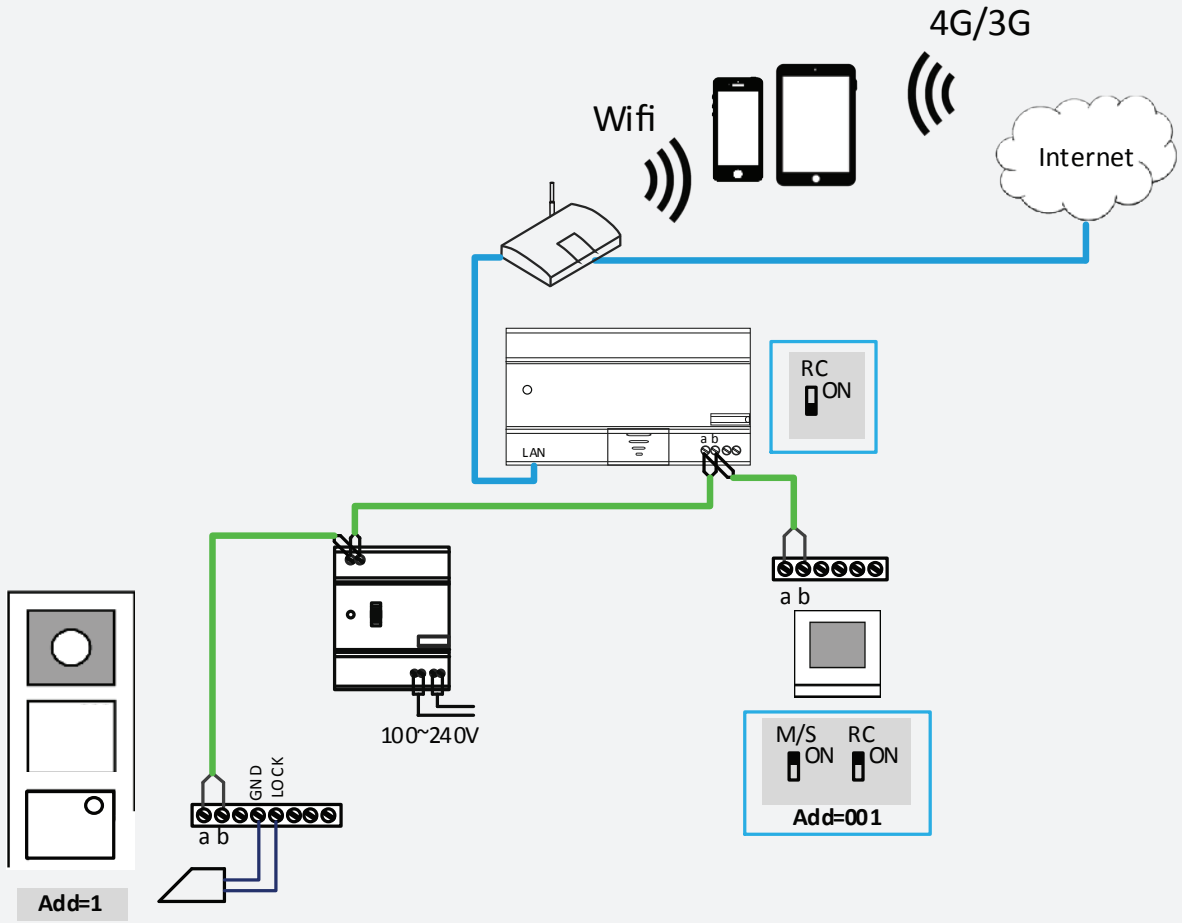

Fig. 07-11

Multi-family building, with lift control

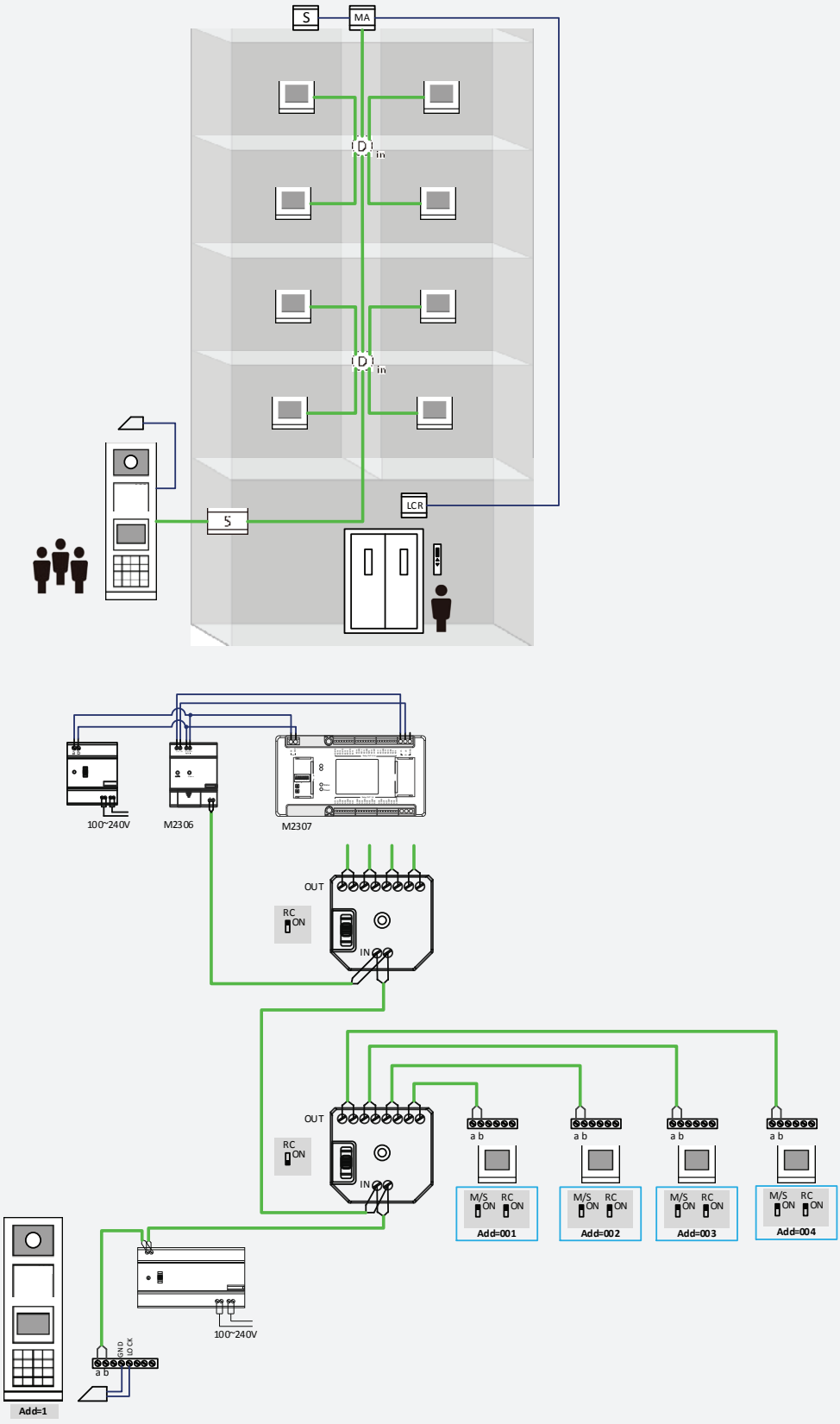

08
Technical assistant tool

ABB-Welcome provides a series of tools to assist with installation. The technical tools can be downloaded or QR code scanned for each tool.

Quotation software

The quotation software enables the easy and efficient system composition and quotation. Three key advantages are:

1. Can upload customized price easily for better price management.
2. Can generate possible matched modular outdoor stations (with cost and general effect) for selection.
3. Once the indoor station is selected, the other system devices will be selected automatically.

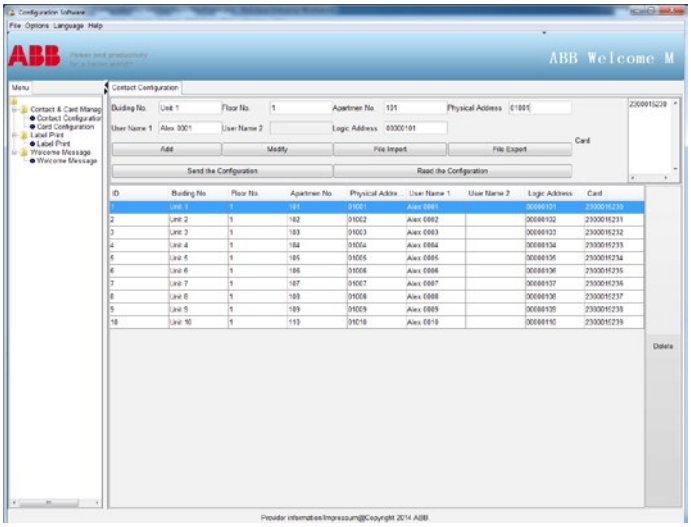

Configuration software

With configuration software, minimal data input will be enough to configure the system.

» It enables the efficient inputting, editing and deleting of residents' names for keypad outdoor station or keypad gate station.
» It supports easy proximity card management.
» It also supports uploading the data from a spreadsheet into the software.
» Online labeling tool enables the efficient and professional printing of 3 different names or numbers, which are for 3-row pushbutton module or 4-row pushbutton module, or nameplate module.

Topology, setting and wiring wizard

If you have installed Visio software. You can also draw topology, setting and wiring diagrams all by yourself. You need get a product library produced by Visio from CNDEX.

With this library, you only need to drag the device out and do some simple line connection, then all will be done.

This product library includes:

» Each product device with illustration, connection terminals and setting instruction.
» The 2-wire BUS and normal 2 wire
» The sketch of the third party products, such as lock and analog camera.

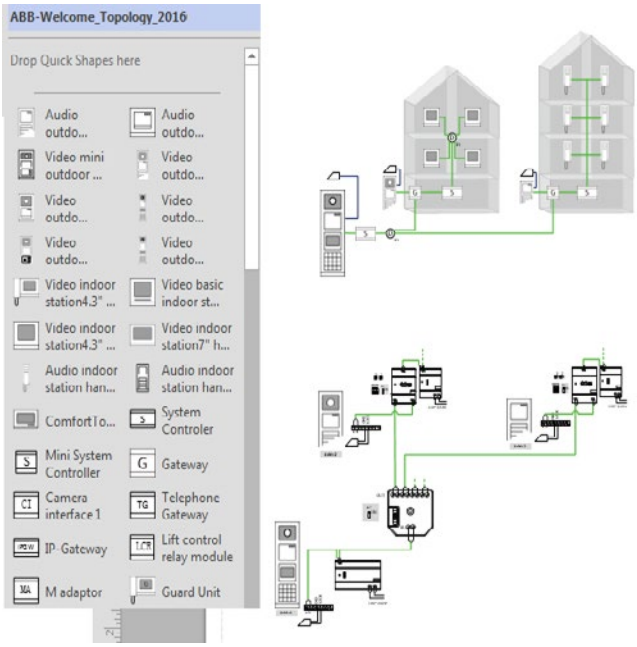

Installation video

Besides the installation manual, instructional videos are available.

1. Video for assembly modules into a finished outdoor station, mounting and wiring of outdoor stations.
2. Video for mounting and wiring of indoor stations.
3. Video for mounting and wiring of system devices.
4. Video for KIT connection for easier DIY solution.

The attached QR code scanning and review in mobile phone or tablet.

Label tool to print

For aluminum outdoor stations, there is a tool made by office word to help printing labels quickly.

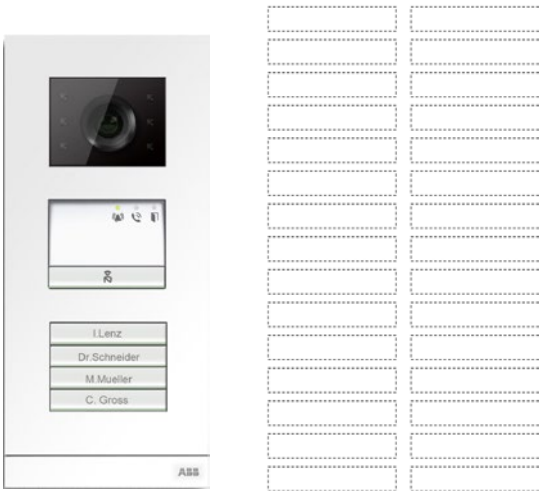

Legend

Terminal devices

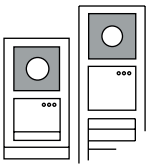

Vedio pushbutton outdoor station

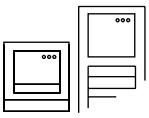

Audio pushbutton outdoor station

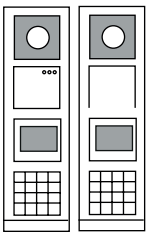

Video keypad outdoor station

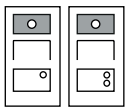

Video mini outdoor station

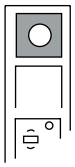

Video round pushbutton outdoor station

7" video hands-free indoor station

Basic 4.3" video hands-free indoor station

4.3" video hands-free indoor station

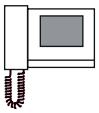

4.3" video handset indoor station

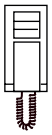

Audio handset indoor station

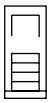

Audio hand-free indoor station

System devices

System controller

Mini system controller

Gateway

Video distributor

Video outdoor distributor

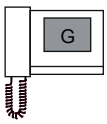

Guard unit

Switch actuator

M adaptor

Lift control relay module

Camera interface

Telephone gateway

IP-Gateway

System symbol

Video indoor station

Audio indoor station

Video outdoor station

Audio outdoor station

Video system

Audio system

Wiring/settingl

- 2-wire bus line
- CAT.5/IP bus line
- Wire
- Coax

Others

Main entrance

Side entrance

Electric door opener

Doorbell

Camera

Light

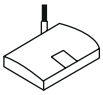

Router

Private Branch Exchange

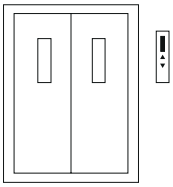

Elevator

Phone/pad

Telephone

—
abb.com

ABB (United Arab Emirates)
Industries(L.L.C)
P.O.Box 11070 Dubai-UAE
T : +971-4-3147 586
F : +971-4-3401 541

ABB (Turkey) Eletrik San.AS
ABB Elektrik Sanayi AS. Organize
Sanayi Bolgesi 2 Cadde
No: 16 Y. Dudullu-Istanbul
T : +90 216 528 2281
F : +90 216 528 2945

ABB (Thailand) Limited
161/1 SG Tower, 1st- 4th Floor, Soi
Mahadlekluang 3, Rajdamri Road,
Lumpini, Pathumwan Bangkok
10330, Tailand
T : +6626651000
F : +6626651043

ABB (Korea) Ltd.
Oksan Bldg, 10th Fl. 157-33
Samsung-dong
Gangnam-gu, 135-090, Seoul,
Korea
T : +82 2 528 3177
F : +82 2 528 2350

ABB Global Marketing - Lebanon
Down Town, Beirut, Lebanon
T : +9611983724/5
F : +9611983723

ABB (India) Limited.
Plot No.1, Sector-1B,
I.I.E.SIDCUL,
Haridwar-249403.India
T : +91 1334 235447
F : +91 1334 235449

ABB Australia Pty Limited
601 Blackburn Road
3168, Notting Hill, Victoria,
Austrilia
T : +61 3 8577 7139
F : +61 3 9545 0415

ABB (Vietnam) Limited
Km 9 National Highway 1A ,
Hoang Liet, Hoang Mai, Hanoi,
Vietnam
T : +84 4 3861 1010
F : +84 4 3861 1009

ABB (KSA) Electrical Industries Co. Ltd.
P.O.Box 325841, Riyadh 11371
T : +966 11 484 5600
F : +966 11 206 7609

ABB (Russia) Ltd.
3121 Wiring Accessories
30/1 bld.2, Obrucheva str. RU
T : +7 495 777 222 0
F : +7 495 777 222 0

ABB Malaysia Sdn Bhd
Block A, Level 2, Lot 608, Jalan
SS13/IK 47500 Subang Jaya
Selangor
T : +603-5628 4888
F : +603-5635 8200

ABB (Hong Kong) Limited
3 Dai Hei Street, Tai Po
Industrial
Estate, Tai po, Hong Kong
T : +852 2929 3912
F : +852 2929 3505

ABB Pte. Ltd.
2 Ayer Rajah Crescent,
Singapore 139935
T: + 65 6776 5711
F: + 65 6778 0222

2TMC107015M0201 6.2017 SH-SO 2000, dpi 409703