REL 301and REL 302 Numerical Transmission Line Protection System

Effective: September 1996
Supersedes D.B. Dated December 1995
ABB Network Control & Protection

Multi-Zoned Distance
Device Number 21, 21N, 21S
21NP, 21P, 02,
67/67N, 50/51N

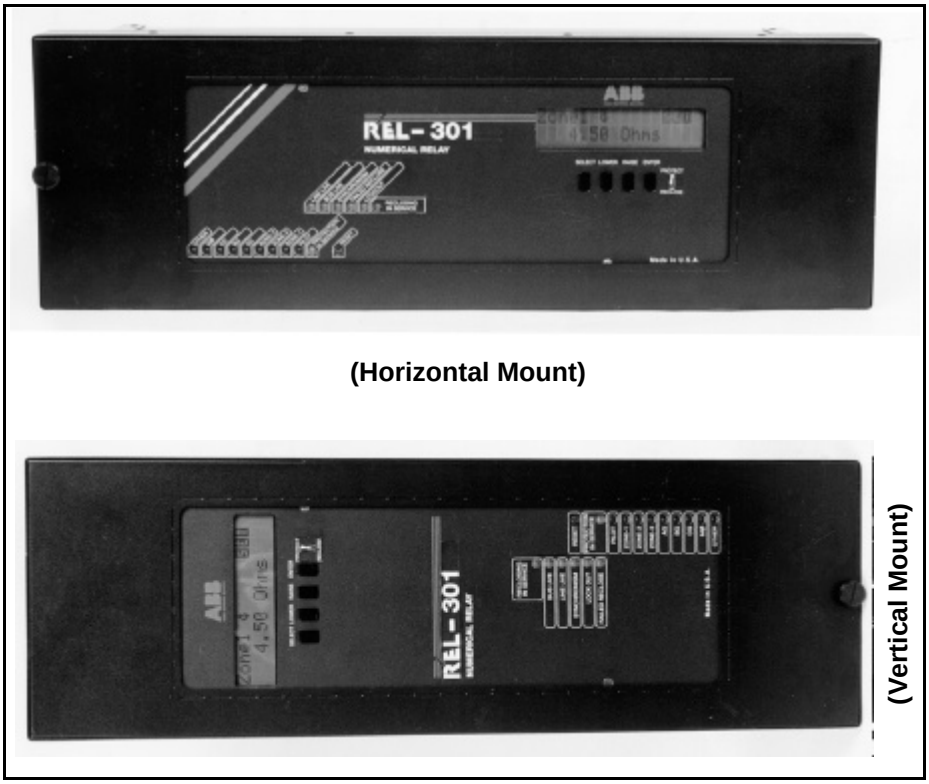

(Horizontal Mount)

(Vertical Mount)

STANDARD FUNCTIONS

- 100% Numerical Processing
- Full scheme three zone phase and ground distance relay (21, 21N, 21S)*
- Independent timers for phase and ground (zone 1, zone 2 and zone 3) (02)
- Reversible zone 3 for remote or local backup
- Four impedance units per zone (one phase-to-phase unit and three phase-to-ground units)
- Directional high set phase and ground instantaneous overcurrent (67, 67G)
- Inverse time ground overcurrent with selectable characteristic(s) and settable directional/non-directional control (51G/67G)

**Can be applied on systems with Delta-Connected Voltage Transformers (when ground distance not used)*

- Zone-2 phase and ground distance torque controlled overcurrent with selectable characteristic(s) and settable time delay or instantaneous reset
- Zero sequence, negative sequence or dual polarization of ground directional measurement
- Loss of potential supervision (Block Trip or Alarm)
- Loss of current monitoring (Block Trip and Alarm)
- Close into fault protection with overcurrent tripping
- Out-of-Step Block Logic
- Pilot System Logic (REL 302 only) - includes additional zone of phase and ground distance (21P, 21NP) plus the following logic functions:
  - Logic for Block, Unblock, POTT, PUTT
  - Three Terminal Line Capability
  - Transient Block Capability
  - Carrier Signal Continuation
  - Weak Feed Capability
- Man-Machine Interface Includes:
  2-Line, Sixteen Character Display
  4-Push-buttons For Data Entry/Retrieval
  10-LEDs For Targeting and Relay Status
- Metering of voltage, current (magnitudes and angles)
- *RS-232C Communications Interface (Rear)
- 50/60 Hz Operation
- Oscillographic Data Storage Capability (16 events)
- Fault Locator function for 16 fault records
- Front panel test capability of all contact outputs
- Front panel display of all contact input circuit integrity.
- Built-in Flexitest switches

Optional Functions

- Multi-Shot Reclosing with or without Synchro-check
- Horizontal (19” rack) or vertical (FT-42 cutout) mounting
- Front panel RS-232C communications port
- Five programmable output contacts
- Standard RS-232C Rear Interface can be replaced with an INtegrated COMmunications (INCOM®) Product Operated Network Interface (PONI) when networking is desired. Networking requires a Basic Interface to Remote Terminal (BIRT) or an INCOM®-based Multi Access Controller (IMAC) to act as a network controller.
- Standard RS-232C Interface can be replaced with RS-232C Interfaces With IRIG-B Time Synchronization Port
- Software for Oscillographic Data Analysis
  5 Programmable Output Contacts

APPLICATION

REL 301 and REL 302 are numerical transmission line protection systems with three and four zones of distance protection (respectively), metering, fault location, self diagnostics and reclosing. All

measurements and logic use microprocessor technology. REL 301 is a non-pilot, 3-zone, step distance protection package. REL 302 is a 4-zone pilot protection package.

The REL 301 has three modes of operation:

1. Non-pilot distance
2. Zone 1 extension
3. Loss of load accelerated trip.

The REL 302 (Pilot) has eight modes of operation:

1. Non-pilot three zone distance
2. Zone 1 extension
3. Loss of load accelerated trip
4. Blocking
5. Permissive underreaching transfer trip
6. Permissive overreaching transfer trip
7. Permissive overreaching transfer trip with weakfeed
8. Unblocking

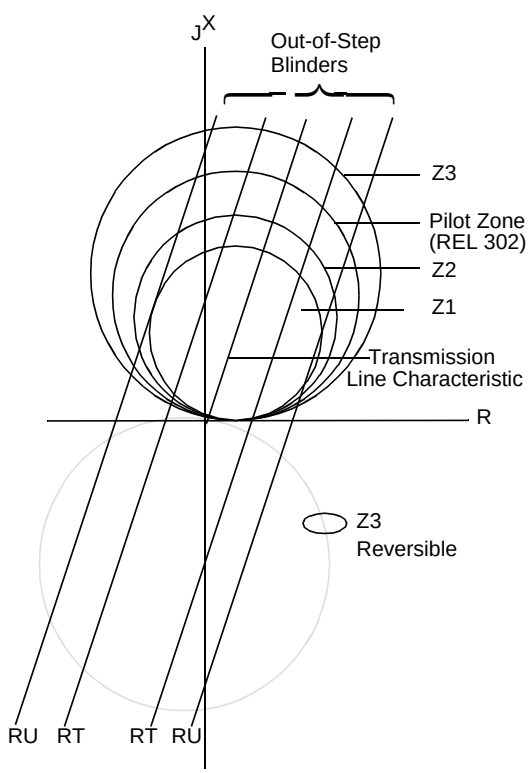

Figure 1

REL 302 also includes special logic for 3 terminal lines, transient blocking, weakfeed and supplemental directional ground overcurrent for high resistance ground faults.

The backup time overcurrent ground protection in REL 301/302 can be directional or non-directional. Its characteristic curve can be selected from the CO family. REL 301/302 also includes directional, instantaneous, phase and ground overcurrent protection.

Ground directional polarizing is user selectable for zero sequence voltage, negative sequence voltage or zero sequence voltage and current (dual). No special $3V_0$ PT connection is required.

Reclosing is optional with user selectable settings for up to 4 reclose attempts and time delays. Synchronism check with voltage supervision is available as well.

Two isolated breaker trip outputs are provided. Two breaker failure and reclose initiate contacts are also provided.

The FT-42 case size of REL 301/302 is designed to offer maximum benefits with minimum disruption to existing installations. Application is universal.

The REL 301/302 can accommodate line-to-line connected vt's on the line The REL 301/302 can accommodate line-to-line connected vt's on the line-side of the breaker for the synch-check application. The relay accounts for both the 30∞ phase shift and the difference in the input voltage itself (120 Vac vs. 69 Vac line-to-ground).

OTHER FEATURES

The standard REL 301/302 has up to sixteen LED's for target and reclosing operation information, with an in-service light which indicates successful self-check tests. The front panel man machine interface has a 32 digit, two line, liquid crystal display (LCD), with four push-buttons. It is easy to access the two most recent fault records, obtain complete metering and setting information, or make changes to the relay settings. REL 301/302 provides faulted phase designation and fault location information. The metering display shows three-phase voltages, three-phase currents, and phase angles.

SELF-CHECK

The microprocessor checks itself, the peripheral circuitry, A/D converter calibration, RAM, NOVRAM and EPROM memories and the power supply. In addition, it monitors the ac inputs and provides indication for LOP (loss of potential) and LOI (loss of current). The user can select to block distance units on loss of potential condition. Overcurrent protection may remain in service during an LOPB condition.

The self checking feature improves reliability and availability by alarming and blocking trip outputs when internal failures are detected. It saves money by reducing or eliminating periodic maintenance requirements.

The dc-dc converter power supply offers exceptionally high reliability. It features a loss-of-power indicator and alarm. It provides complete protection from overvoltage and overcurrent. Trip outputs are blocked on loss of dc.

OPERATING PRINCIPLES

The R-X diagram, (Figure 1) illustrates the REL 301/302 impedance characteristics. Zone 1 phase and ground settings are chosen to provide protection of the line without overreaching the next bus. A

setting of 80% of the line impedance is typical. Faults occurring within the reach of the zone 1 measurement cause direct tripping. The user can select to add a 0-15 cycle time delay to zone 1 trip. Zones 2 and 3 are set to overreach and have independent timers. Zone 3 is reversible for local or remote backup.

Each zone consists of four variable mho distance units, three ϕ-G units and one ϕ-ϕ unit.

ϕ-G fault detection is accomplished by three quadrature polarized phase units, ϕA, ϕB and ϕC. Equation (1) and the quadrature voltage (2) are the operate and reference quantities, respectively. The unit will produce output when the operating quantity leads the reference quantity.

$$V_{XG} - \left[I_X + \frac{Z_{0L} - Z_{1L}}{Z_{1L}} I_0 \right] Z_{CG} \quad (1)$$

and $(V_Q) = V_{CB}, V_{AC}$, and V_{BA} for ϕA, ϕB and ϕC units, respectively. (2)

where:

$V_{XG} = V_{AG}, V_{BG}$, or V_{CG}

$I_X = I_A, I_B$ or I_C

Z_{1L}, Z_{0l} = Positive and zero sequence line impedance

$$I_0 = (I_A + I_B + I_C)\frac{1}{3}$$

$Z_{CG} = Z_1, Z_2$, or Z_3 ground distance reach setting

3ϕ fault detection is accomplished by the operation of one of the three ϕG-units (ϕA, ϕB and ϕC), plus the 3ϕ fault output signal from the faulted phase selector unit.

For a 3 phase fault, $I_O = 0$. Equation (1) becomes equation (3) for the operate quantity. The unit will produce output when the operate quantity leads the reference quantity.

$$V_{XG} - I_X Z_{CP} \quad (3)$$

and $(V_Q) = V_{CB}, V_{AC}$, and V_{BA} for ϕA, ϕB (4)

and ϕC units, respectively (5)

where $V_{XG} = V_{AG}, V_{BG}$, or V_{CG}

$I_X = I_A, I_B$, or I_C

Z_{CP} = Z1, Z2, and Z3 phase reach settings

The ϕϕ–unit responds to all ϕϕ and ϕϕG faults, and some ϕG faults. Equations (5) and (6) are for operate and reference quantities, respectively. They will produce output when the operate quantity leads the reference quantity. Z_{CP} is the same zone reach quantities as above.

$$(V_{AB} - I_{AB} Z_{CP}) \quad (6)$$

$$(V_{CB} - I_{CB} Z_{CP}) \quad (7)$$

Communications

ABB introduced the first intelligent family of relay communication products: WRELCOM. WRELCOM was born out of the necessity of substation devices to exchange data effectively and quickly. Through a standard phone circuit, data from modern communication-based relays and older electromechanical or solid-state relays can be obtained over the same network.

INCOM® (INtegrated COMmunications) defines the protocol and medium used to communicate through the network among various “INCOM®-based” products. The network of up to 2500 protective relays and associated devices is continually scanned by the network master device.

Network communications between protective devices is guided through the network master device which is a Basic Interface to Remote Terminal (BIRT) or an INCOM® -based Multi Access Controller (IMAC), which stores and organizes pertinent data, generating reports for each event. Access to this information permits intelligent decisions, such as the need to dispatch crews after a fault or relay failure.

The WRELCOM Remote Communications Program (RCP)has been written to facilitate communications with INCOM®-based protective relays and other network devices. It will run on any MS-DOS® based system. “Pull-down” menus and “Pop-up” screens are incorporated providing a user friendly man-machine interface. RCP is required to communicate with any INCOM® protocol relay.

See I.L. 40-603 for complete details about RCP

Functions Include:

- Relay Acknowledgment
- Relay Self-Checking Status
- Remote Settings (can be downloaded from stored files)
- Fault Record Summary
- 16 fault Records
- Metering (Voltage, Current, Phase angle, Watt Flow, Varflow, Power Factor and status of Monitoring functions)
- Intermediate Targets
- Reset Targets/LEDs
- Optional Oscillographic Data Retrieval, Listing, Plotting

OSCILLOGRAPHY

REL 301/302 provides oscillographic data storage capabilities for recording system fault currents and voltages with 2 ms resolution. The information is captured with every general start and/or trip, but is only saved based on the data storing option selected. This option permits saving events for: trips only, Zone 2 initiate or trip, Zone 2 or 3 initiate or trip, or general start or trip. This allows a variable degree of system area coverage with REL 301/302’s

oscillography. Also, when the REL 301/302 general start mode is activated longer than 7 cycles and subsequently trips, a second event second event record will be saved. The basic oscillographic functions and capabilities are shown below.

Graphical Oscillographic Data display is accomplished by using the optional OSCillographic And Recording (OSCAR) software. OSCAR gives the user a method for displaying the fault information graphically, a form which is more conducive to analysis than the tabular form. OSCAR also gives the user many ways to incorporate the graphics information in hard-copy reports.

See I.L. 40-606 for complete details about OSCAR

16 Events

- 8 samples per cycle
- 1 cycle pre-trigger
- 7 cycles post-trigger
- 9 analog traces (2 ms resolution)
- 24 digital traces (2 ms resolution)

Trigger options

- Trip
- Z2 or trip
- Z2, Z3 or trip
- General start

REL 301/302 — *Specifications*

Technical Specifications

General

Operating Speed 12 ms minimum
22 ms Typical

AC Voltage Input:

VLL @ 60 Hz	120 V rms
VLN	70V rms
VLL @ 50 Hz	110 V rms
VLN	63.5 V rms

AC Current Input In 1 or 5 A

Maximum Permissible ac Voltage

Continuous	1.5 x In
10 second	2.5 x In

Maximum Permissible ac Current

Continuous	3 x In
1 second	100 x In

Minimum Operating Current
0.1 x In

Rated Frequency 50 or 60 Hz

Dc Battery Voltages

Nominal	Operating range
48/60 Vdc	38-70 Vdc
110/125 Vdc	88-145 Vdc
220/250 Vdc	176-290 Vdc

Burdens

Dc battery 7 W normal
30 W tripping

Voltage	0.02 VA/phase at 70 Vac
Current	0.15 VA/phase at 5 A

External connection

- Terminal blocks located on the rear of the chassis suitable for #14 square tongue lugs
- Voltage, current and trip wiring to FT-42 switches suitable for #12 wire lugs

Dimensions and Weight of FT-42 Case

- 19.25” (489mm)High
- 6.375” (162 mm) Wide
- 6.626” (168mm) Deep (Behind Panel)
- 24 lbs (16kg)

Contact Data

- Two Breaker Trip Contacts*
- Two Breaker Close Contacts (Reclosing Option Only)*
- Two Breaker Failure Initiate Contacts**
- Two Reclose Initiate Contacts**
- One General Start Contact (Indicates Power System Disturbance)**
- One System Failure Alarm Contact**
- Two Trip Alarm Contacts**
- Five Programmable Output Contacts (Optional):
  One NO Trip Rated With FT-Switch Isolation*
  Four NO/NC (Jumper Selectable) Contacts**

*Trip contacts

- Make and carry 30 A for 1 second, 10A continuous capability, break 50 W resistive or 25 W with L/R =.045 seconds

****Non-trip contacts**

- 1 A continuous
- 0.1A resistive interrupt capability
- Supports 1000 Vac across open contacts

Ambient temperature range

- For operation-20°C +60°C
- For storage-40°C to +80°C

Insulation test voltage

- 2.8 kV dc, 1 minute (ANSI C37.90) (IEC-255-5)

Impulse voltage withstand

- 5 kV peak, 1.2 x 50 µs o.5 Joule (IEC-255-5)

Surge withstand voltage

- 2.5 kV, 1 MHz (ANSI C37.90.1 IEC-255-6)

Fast transient voltage

- 4 kV, 5 x 50 ns (IEC 801-4)
- 5 kV, 10 x 150 ns (ANSI C37.90.1)

EMI volts/meter withstand

- 25 MHz-1GHz 10 V/m withstand (ANSI C37.90.2)

Standards:

ANSI C37.90	IEC-255-16
IEC-255-6A	BS 142-1982
IEC-255-12	

Measurements

- Three variable mho phase-to-ground and one variable mho phase-to-phase impedance unit per zone.
- Three-phase and one ground directional high set overcurrent units.
- Three phase non-directional overcurrent units for load loss trip and close-into-fault trip.
- One ground medium set non-directional overcurrent unit for ground supervision.
- One time overcurrent ground unit with selectable directional or non-directional capability.
- One forward set instantaneous directional overcurrent ground unit to supplement pilot logic for high resistance ground faults
- Three undervoltage units for weakfeed and LOP supervision.
- Three voltage change (ΔV) fault detectors.
- Four current change (ΔI) fault detectors.
- One instantaneous ground overcurrent unit low set (IOS).
- One reverse set instantaneous directional overcurrent ground unit (pilot carrier start, weakfeed, transient block).

Reclose Initiate Outputs

Select	RI
OFF	None
1PR	3RI(ϕG) only
2PR	3RI(ϕG) & Mϕ
3PR	3RI all faults

RI – reclose initiation
3RI – 3 pole reclose initiate
ϕG – single phase-to-ground faults
Mϕ – multi-phase faults -ϕ–ϕ and ϕϕG initiate

Reclose Zone Selection

- Z1RI Zone 1 Trip - RI
- Z 2RI Zone 2 Trip - RI
- Z3RI Zone 3 Trip -RI

Specifications — *REL 301/302*

Recloser with Synchro-check

- 0 to 4 reclose attempts
- Instantaneous or Time Delay
- Reset Timer
- Hot-line-Dead bus/Dead-line Hot-bus Logic
- Synchro-check

Setting Ranges

- CT ratio: 30-5000
- VT ratio: 100-7000

Phase and ground distance Z1, Z2, Z3, PLT

- 0.01-50 ohms in 0.01 ohm steps for 5 A ct
- 0.05-250 ohms in 0.05 ohm steps for 1 A ct

Zone timers -separate timers for phase and ground

- Zone 1: 0 to 15 cycles in 1 cycle steps
- Zone 2: a) Definite time, 0.1 to 2.99 seconds in 0.01 second steps. b) Torque control CO curve with time delay or instantaneous reset
- Zone 3: 0.1 to 9.99 seconds in 0.01 second steps

Inverse time overcurrent ground relay

- Pickup 0.5-4.0 in 0.5 A increments for 5 A ct
- Pickup 0.1-8.0 in 0.1 A increments for 1 A ct
- Choice of 7 inverse time characteristics,63 time dials
- Set for directional or non-directional operation
- Zero Sequence, Negative Sequence or Dual Polarization

High set instantaneous overcurrent trip units-phase and ground (I_{AH}, I_{BH}, I_{CH}, I_{OH})

- 2.0-150 In 0.5 A Steps for 5 A ct
- 0.4-30 in 0.1 a steps for 1 A ct

(I_{OS}, I_{OM})

- 0.5 - 10 in 0.5 A steps for 5 A ct
- 0.1-2 in 0.1 A steps for 1 A ct

Load loss current units (I_{AL}, I_{BL}, I_{CL})

- 0.5 - 10 in 0.5 A steps for 5 A ct
- 0.1-2 in 0.1 A steps for 1 A ct

Out of Step Block

- OSB override timer 400-4000 ms in 18 ms steps
- OSB inner blinder1.0 - 15.0Ω in 0.1Ω steps
- OSB outer blinder 3.0 - 15.0Ω in 0.1Ω steps

Maximum Torque Angle

- 10 to 90 degrees in 1.0 degree steps

Zero Sequence Compensation (Z_{0L}/Z_{1L})

- Time and Date
- year, month, weekday, hour minute

Blocking System Channel Coordination Timer

- 0 – 98 ms in 2 ms steps

Additional Settings

Frequency

- 50 -60 Hz

CT secondary rating

- 1 or 5 A ct

Fault Location Display

- Km or Miles

Pilot system selection for REL 302 only

- 3 Zone non-pilot
- Blocking
- POTT/Unblock
- PUTT

Weakfeed enable

- Yes or No

Three Terminal Application

- Yes or No

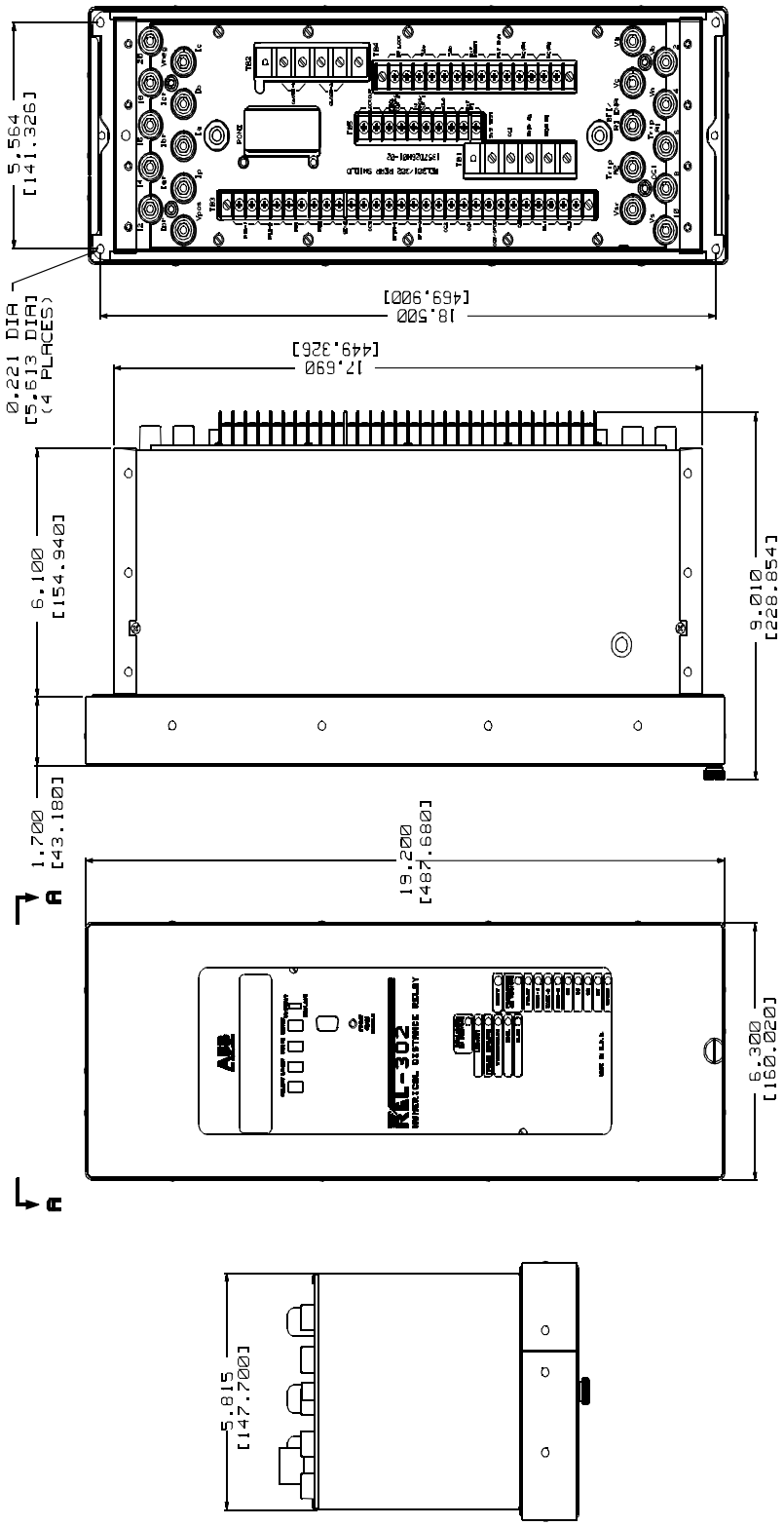

2682F39
Sheet 1 of 2

Figure 2. REL 301/302 Outline Drawing (Vertical)

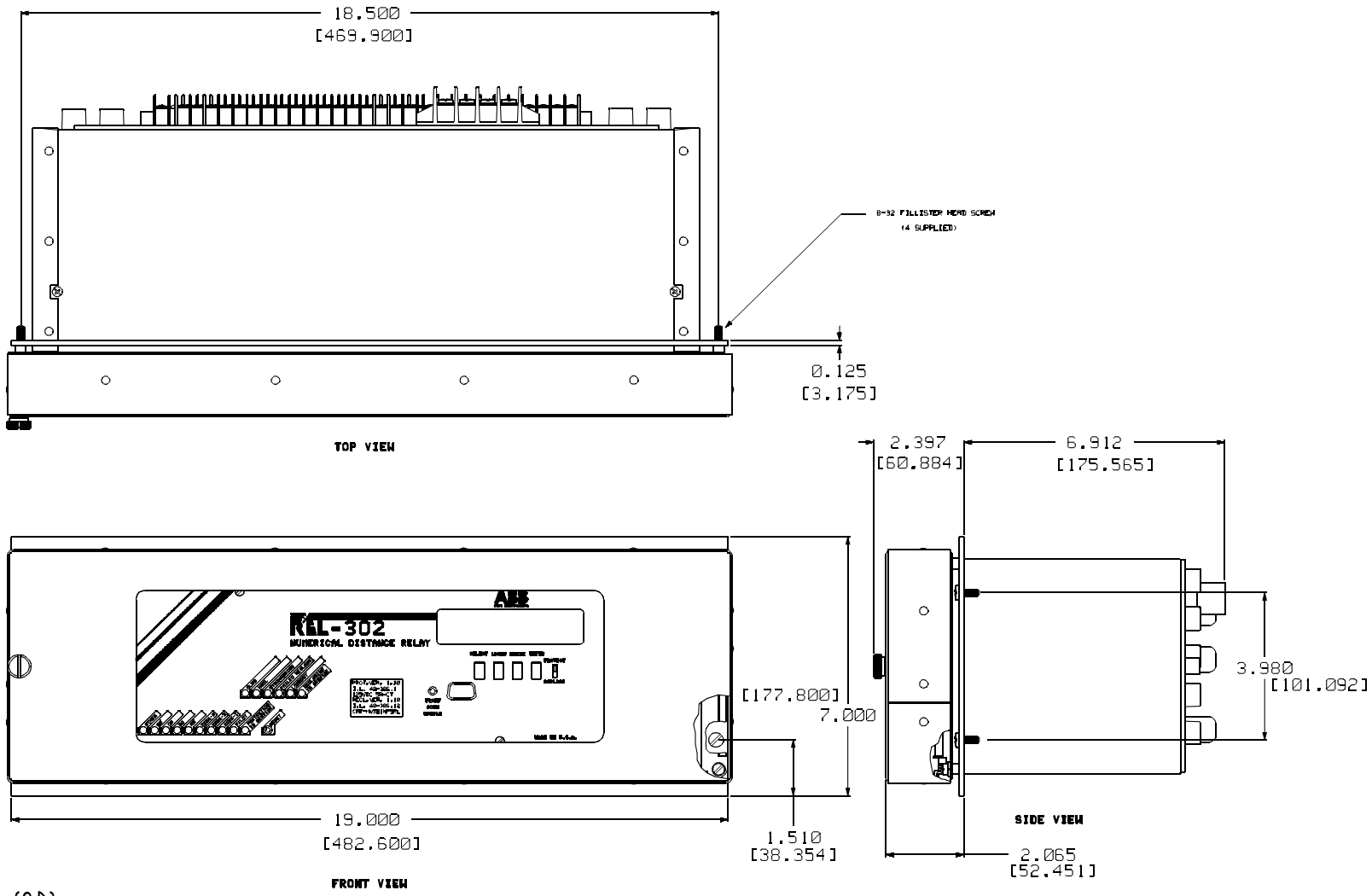

Figure 3. REL 301/302 Outline Drawing (Horizontal)

2682F39
Sheet 2 of 2

REL 301/302 CATALOG NUMBERING SYSTEM

M	V	3	B	1	R	N	5	C	L

REL 301/302 Numerical Relay System (50/60 Hz) — M

MOUNTING
- Horizontal — H
- Vertical — V

TRIP
- 3-Pole Trip — 3

CURRENT
- 1 A — A
- 5 A — B

BATTERY SUPPLY VOLTAGE
- 48 Vdc — 4
- 125 Vdc — 1
- 250 Vdc — 2

RECLOSING
- Multi-shot Reclosing — R
- Multi-shot Reclosing with Sync-check, 70V * — S
- Multi-shot Reclosing with Sync-check, 120V ** — T
- None — N

PILOT SYSTEM
- Pilot (REL-302) — P
- Non-Pilot (REL-301) — N

PROGRAMMABLE CONTACTS
- 5 Form-C trip rated contacts — 5
- None — N

COMMUNICATIONS PORT
PONI Options (Rear mounted)
- INCOM (For Networking) — C
- RS-232C (Standard) — R
- RS-232 (With IRG-B port) — B

FRONT PANEL INTERFACE
- LCD Display — L
- RS-232C port (with LCD Display) — B

ACCESSORIES

FT TEST PLUG	
Top or Bottom/Left or Right	S# 13B453G05
TEST FIXTURE	
Inner Chassis Test Fixture 5 A	S# 2678F11G04
SOFTWARE	
Remote Communications Program (RCP)	S# SWRCP01
OSCillographic And Recording (OSCAR)	S# SWOSC01
COMMUNICATIONS CABLE KIT	S# 1504B78G01
VERTICAL TO HORIZONTAL CONVERSION KIT	S# 2678F11G05

NOTES:

Remote Communications Program (RCP) and OS-Cillographic And Recording (OSCAR) Software is ordered separately. (See Accessories this page).

* 70V – Phase-to-neutral

** 120V – Phase-to-phase

REFERENCE DOCUMENTS:	**DOCUMENT NUMBER:**
REL 301/302 Color Brochure	B-386
REL 301/302 Instruction Leaflet	I.L. 40-386.1
REL 301/302 Test Manual	T.M. 40-386.1
REL 301/302 Reclosing Manual (Version 1.1x)	I.L. 40-386.12
WRELCOM Application Guide	AD 40-600
BIRT Instruction Leaflet	I.L. 40-614
IMAC Instruction Leaflet	I.L. 40-607
RCP Instruction Leaflet	I.L. 40-603
OSCAR Instruction Leaflet	I.L. 40-606

ABB Power T&D Company Inc.
Relay Division
4300 Coral Ridge Drive
Coral Springs, FL 33065
954-752-6700

ABB Power T&D Company Inc.
Relay Division
7036 Snowdrift Road, Suite 2
Allentown, PA 18106
610-395-7333