Relion® 650 series

Transformer protection RET650 ANSI Technical Manual

Power and productivity
for a better world™

Document ID: 1MRK 504 129-UUS
Issued: June 2012
Revision: B
Product version: 1.2

© Copyright 2012 ABB. All rights reserved

Copyright

This document and parts thereof must not be reproduced or copied without written permission from ABB, and the contents thereof must not be imparted to a third party, nor used for any unauthorized purpose.

The software and hardware described in this document is furnished under a license and may be used or disclosed only in accordance with the terms of such license.

Trademarks

ABB and Relion are registered trademarks of the ABB Group. All other brand or product names mentioned in this document may be trademarks or registered trademarks of their respective holders.

Warranty

Please inquire about the terms of warranty from your nearest ABB representative.

ABB Inc.

1021 Main Campus Drive

Raleigh, NC 27606, USA

Toll Free: 1-800-HELP-365, menu option #8

ABB Inc.

3450 Harvester Road

Burlington, ON L7N 3W5, Canada

Toll Free: 1-800-HELP-365, menu option #8

ABB Mexico S.A. de C.V.

Paseo de las Americas No. 31 Lomas Verdes 3a secc.

53125, Naucalpan, Estado De Mexico, MEXICO

Phone: (+1) 440-585-7804, menu option #8

Disclaimer

The data, examples and diagrams in this manual are included solely for the concept or product description and are not to be deemed as a statement of guaranteed properties. All persons responsible for applying the equipment addressed in this manual must satisfy themselves that each intended application is suitable and acceptable, including that any applicable safety or other operational requirements are complied with. In particular, any risks in applications where a system failure and/or product failure would create a risk for harm to property or persons (including but not limited to personal injuries or death) shall be the sole responsibility of the person or entity applying the equipment, and those so responsible are hereby requested to ensure that all measures are taken to exclude or mitigate such risks.

This document has been carefully checked by ABB but deviations cannot be completely ruled out. In case any errors are detected, the reader is kindly requested to notify the manufacturer. Other than under explicit contractual commitments, in no event shall ABB be responsible or liable for any loss or damage resulting from the use of this manual or the application of the equipment.

Conformity

This product complies with the directive of the Council of the European Communities on the approximation of the laws of the Member States relating to electromagnetic compatibility (EMC Directive 2004/108/EC) and concerning electrical equipment for use within specified voltage limits (Low-voltage directive 2006/95/EC). This conformity is the result of tests conducted by ABB in accordance with the product standards EN 50263 and EN 60255-26 for the EMC directive, and with the product standards EN 60255-1 and EN 60255-27 for the low voltage directive. The product is designed in accordance with the international standards of the IEC 60255 series and ANSI C37.90. The DNP protocol implementation in the IED conforms to "DNP3 Intelligent Electronic Device (IED) Certification Procedure Subset Level 2", available at www.dnp.org .

Table of contents

Section 1 Introduction....27
This manual....27
Intended audience....27
Product documentation....28
Product documentation set....28
Document revision history....29
Related documents....30
Symbols and conventions....30
Symbols....30
Document conventions....31

Section 2 Available functions....33
Main protection functions....33
Back-up protection functions....33
Control and monitoring functions....34
Communication....37
Basic IED functions....39

Section 3 Analog inputs....41
Introduction....41
Operation principle....41
Settings....42

Section 4 Binary input and output modules....47
Binary input....47
Binary input debounce filter....47
Oscillation filter....47
Settings....48
Setting parameters for binary input modules....48
Setting parameters for communication module....49

Section 5 Local Human-Machine-Interface LHMI....53
Local HMI screen behaviour....53
Identification....53
Settings....53
Local HMI signals....54
Identification....54

Function block....54
Signals....54
Basic part for LED indication module....55
Identification....55
Function block....55
Signals....55
Settings....56
LCD part for HMI function keys control module....57
Identification....57
Function block....57
Signals....57
Settings....57
Operation principle....58
Local HMI....58
Display....58
LEDs....61
Keypad....61
LED....63
Functionality....63
Status LEDs....63
Indication LEDs....63
Function keys....72
Functionality....72
Operation principle....72

Section 6 Differential protection....75
Transformer differential protection....75
Functionality....75
Transformer differential protection, two winding T2WPDIF (87T)....76
Identification....76
Function block....77
Signals....77
Settings....78
Monitored data....80
Transformer differential protection, three winding T3WPDIF (87T)....80
Identification....80
Function block....81
Signals....81

Settings....82
Monitored data....84
Operation principle....84
Function calculation principles....85
Fundamental frequency differential currents....86
Differential current alarm....91
Bias current....92
Elimination of zero sequence currents....92
Restrained and unrestrained limits of the differential protection....93
Fundamental frequency negative sequence differential currents....95
Internal/external fault discriminator....97
Unrestrained, and sensitive negative sequence protections....101
Instantaneous differential currents....103
Harmonic and waveform block criteria....103
Switch onto fault feature....104
Logic diagram....105
Technical data....112
Restricted earth fault protection, low impedance REFPDIF (87N)....112
Identification....112
Functionality....113
Function block....113
Signals....113
Settings....114
Monitored data....115
Principle of operation....115
Fundamental principles of the restricted ground fault protection....115
Operate and restrain characteristic....118
Calculation of differential current and bias current....118
Detection of external ground faults....119
Algorithm of the restricted ground fault protection....121
Technical data....122
1Ph High impedance differential protection HZPDIF (87)....122
Identification....122
Introduction....122
Function block....123
Signals....123
Settings....124

Monitored data....124
Operation principle....124
Logic diagram....124
Technical data....125

Section 7 Current protection....127
Instantaneous phase overcurrent protection 3-phase output PHPIOC (50)....127
Identification....127
Functionality....127
Function block....127
Signals....127
Settings....128
Monitored data....128
Operation principle....128
Technical data....129
Four step phase overcurrent protection 3-phase output OC4PTOC (51/67)....129
Identification....129
Functionality....129
Function block....130
Signals....130
Settings....131
Monitored data....133
Operation principle....134
Technical data....138
Instantaneous residual overcurrent protection EFPIOC (50N)....139
Identification....139
Functionality....139
Function block....139
Signals....140
Settings....140
Monitored data....140
Operation principle....140
Technical data....141
Four step residual overcurrent protection, zero, negative sequence direction EF4PTOC (51N/67N)....141
Identification....141
Functionality....142
Function block....142
Signals....143

Settings....144
Monitored data....146
Operation principle....147
Operating quantity within the function....147
Internal polarizing....148
Operating directional quantity within the function....151
External polarizing for ground-fault function....152
Base quantities within the protection....152
Internal ground-fault protection structure....152
Four residual overcurrent steps....153
Directional supervision element with integrated directional comparison function....154
Technical data....159
Thermal overload protection, two time constants TRPTTR (49)....160
Identification....160
Functionality....160
Function block....160
Signals....161
Settings....161
Monitored data....162
Operation principle....163
Technical data....166
Breaker failure protection 3-phase activation and output CCRBRF (50BF)....166
Identification....166
Functionality....166
Function block....167
Signals....167
Settings....168
Monitored data....168
Operation principle....169
Technical data....170
Pole discrepancy protection CCRPLD (52PD)....171
Identification....171
Functionality....171
Function block....172
Signals....172
Settings....172
Monitored data....173
Operation principle....173

Pole discrepancy signaling from circuit breaker.....175
Unsymmetrical current detection.....176
Technical data.....176
Directional over-/under-power protection GOPPDOP/GUPPDUP (32/37).....176
Functionality.....176
Directional overpower protection GOPPDOP (32).....177
Identification.....177
Function block.....177
Signals.....178
Settings.....178
Monitored data.....179
Directional underpower protection GUPPDUP (37).....179
Identification.....180
Function block.....180
Signals.....180
Settings.....181
Monitored data.....182
Operation principle.....182
Low pass filtering.....184
Technical data.....185
Negative sequence based overcurrent function DNSPTOC (46).....186
Identification.....186
Functionality.....186
Function block.....186
Signals.....187
Settings.....187
Monitored data.....189
Operation principle.....189
Technical data.....189

Section 8 Voltage protection.....191
Two step undervoltage protection UV2PTUV (27).....191
Identification.....191
Functionality.....191
Function block.....191
Signals.....192
Settings.....192
Monitored data.....193
Operation principle.....193

Measurement principle....194
Time delay....194
Blocking....195
Design....195
Technical data....197
Two step overvoltage protection OV2PTOV (59)....197
Identification....197
Functionality....197
Function block....198
Signals....198
Settings....199
Monitored data....200
Operation principle....200
Measurement principle....201
Time delay....201
Blocking....203
Design....203
Technical data....205
Two step residual overvoltage protection ROV2PTOV (59N)....205
Identification....205
Functionality....205
Function block....206
Signals....206
Settings....207
Monitored data....207
Operation principle....207
Measurement principle....208
Time delay....208
Blocking....209
Design....209
Technical data....211
Overexcitation protection OEXPVPH (24)....211
Identification....211
Functionality....212
Function block....212
Signals....212
Settings....213
Monitored data....213
Operation principle....214
Measured voltage....216

Operate time of the overexcitation protection....216
Cooling....219
Overexcitation protection function measurands....219
Overexcitation alarm....220
Logic diagram....220
Technical data....221

Section 9 Frequency protection....223
Underfrequency protection SAPTUF (81)....223
Identification....223
Functionality....223
Function block....223
Signals....224
Settings....224
Monitored data....224
Operation principle....224
Measurement principle....225
Time delay....225
Blocking....225
Design....226
Technical data....226
Overfrequency protection SAPTOF (81)....227
Identification....227
Functionality....227
Function block....227
Signals....227
Settings....228
Monitored data....228
Operation principle....228
Measurement principle....228
Time delay....229
Blocking....229
Design....229
Technical data....230
Rate-of-change frequency protection SAPFRC (81)....230
Identification....231
Functionality....231
Function block....231
Signals....231
Settings....232

Operation principle....232
Measurement principle....232
Time delay....233
Design....234
Technical data....234

Section 10 Secondary system supervision....235
Breaker close/trip circuit monitoring TCSSCBR....235
Identification....235
Functionality....235
Function block....235
Signals....235
Settings....236
Operation principle....236
Technical data....237

Section 11 Control....239
Apparatus control....239
Functionality....239
Bay control QCBAY....239
Identification....239
Functionality....239
Function block....240
Signals....240
Settings....240
Local remote LOCREM....241
Identification....241
Functionality....241
Function block....241
Signals....241
Settings....242
Local remote control LOCREMCTRL....242
Identification....242
Functionality....242
Function block....242
Signals....243
Settings....243
Operation principle....244
Bay control QCBAY....244
Local remote/Local remote control LOCREM/ LOCREMCTRL....245

Voltage control 246
Functionality....246
Automatic voltage control for tapchanger, parallel control TR8ATCC (90)....247
Identification....247
Function block....248
Signals....248
Settings....251
Monitored data....254
Tap changer control and supervision, 6 binary inputs TCMYLTC (84)....254
Identification....255
Function block....255
Signals....255
Settings....257
Monitored data....257
Operation principle....258
Automatic voltage control for tap changer TR8ATCC (90)....258
Tap changer control and supervision, 6 binary inputs TCMYLTC (84)....261
Connection between TR8ATCC (90) and TCMYLTC (84)....265
Technical data....268
Logic rotating switch for function selection and LHMI presentation SLGGIO....269
Identification....269
Functionality....269
Function block....270
Signals....270
Settings....271
Monitored data....272
Operation principle....272
Selector mini switch VSGGIO....273
Identification....273
Functionality....273
Function block....273
Signals....273
Settings....274
Operation principle....274
IEC 61850 generic communication I/O functions DPGGIO....275
Identification....275

Functionality....275
Function block....276
Signals....276
Settings....276
Operation principle....276
Single point generic control 8 signals SPC8GGIO....277
Identification....277
Functionality....277
Function block....277
Signals....277
Settings....278
Operation principle....279
Automation bits AUTOBITS....279
Identification....279
Functionality....279
Function block....280
Signals....280
Settings....281
Operation principle....282
Function commands for IEC 60870-5-103 I103CMD....282
Functionality....282
Function block....282
Signals....283
Settings....283
IED commands for IEC 60870-5-103 I103IEDCMD....283
Functionality....283
Function block....283
Signals....284
Settings....284
Function commands user defined for IEC 60870-5-103 I103USRCMD....284
Functionality....284
Function block....285
Signals....285
Settings....285
Function commands generic for IEC 60870-5-103 I103GENCMD....286
Functionality....286
Function block....286
Signals....286
Settings....287

IED commands with position and select for IEC 60870-5-103 I103POSCMD....287
Functionality....287
Function block....287
Signals....287
Settings....288

Section 12 Logic....289
Tripping logic common 3-phase output SMPPTRC (94)....289
Identification....289
Functionality....289
Function block....289
Signals....290
Settings....290
Operation principle....290
Technical data....291
Trip matrix logic TMAGGIO....291
Identification....291
Functionality....292
Function block....292
Signals....293
Settings....294
Operation principle....294
Configurable logic blocks....296
Standard configurable logic blocks....296
Functionality....296
OR function block....297
Inverter function block INVERTER....298
PULSETIMER function block....298
Controllable gate function block GATE....299
Exclusive OR function block XOR....300
Loop delay function block LOOPDELAY....301
Timer function block TIMERSET....302
AND function block....303
Set-reset memory function block SRMEMORY....304
Reset-set with memory function block RSMEMORY....306
Technical data....307
Fixed signals FXDSIGN....308
Identification....308
Functionality....308

Function block....308
Signals....308
Settings....309
Operation principle....309
Boolean 16 to integer conversion B16I....309
Identification....309
Functionality....309
Function block....310
Signals....310
Settings....311
Monitored data....311
Operation principle....311
Boolean 16 to integer conversion with logic node representation B16IFCVI....311
Identification....311
Functionality....311
Function block....312
Signals....312
Settings....313
Monitored data....313
Operation principle....313
Integer to boolean 16 conversion IB16A....313
Identification....313
Functionality....313
Function block....314
Signals....314
Settings....315
Operation principle....315
Integer to boolean 16 conversion with logic node representation IB16FCVB....315
Identification....315
Functionality....315
Function block....316
Signals....316
Settings....317
Operation principle....317

Section 13 Monitoring....319
Measurements....319
Functionality....319

Table of contents

Measurements CVMMXN....320
Identification....320
Function block....321
Signals....321
Settings....322
Monitored data....325
Phase current measurement CMMXU....326
Identification....326
Function block....326
Signals....326
Settings....327
Monitored data....328
Phase-phase voltage measurement VMMXU....328
Identification....328
Function block....328
Signals....329
Settings....330
Monitored data....330
Current sequence component measurement CMSQI....331
Identification....331
Function block....331
Signals....331
Settings....332
Monitored data....333
Voltage sequence measurement VMSQI....334
Identification....334
Function block....334
Signals....334
Settings....335
Monitored data....336
Phase-neutral voltage measurement VNMMXU....337
Identification....337
Function block....337
Signals....337
Settings....338
Monitored data....339
Operation principle....339
Measurement supervision....339
Measurements CVMMXN....343
Phase current measurement CMMXU....348

Phase-phase and phase-neutral voltage measurements VMMXU, VNMMXU....349
Voltage and current sequence measurements VMSQI, CMSQI....349
Technical data....349
Event Counter CNTGGIO....350
Identification....350
Functionality....350
Function block....350
Signals....351
Settings....351
Monitored data....351
Operation principle....352
Reporting....352
Technical data....352
Disturbance report....353
Functionality....353
Disturbance report DRPRDRE....353
Identification....353
Function block....354
Signals....354
Settings....354
Monitored data....355
Measured values....358
Analog input signals AxRADR....359
Identification....359
Function block....359
Signals....359
Settings....360
Analog input signals A4RADR....364
Identification....364
Function block....364
Signals....365
Settings....365
Binary input signals BxRBDR....369
Identification....369
Function block....369
Signals....370
Settings....370
Operation principle....376

Disturbance information....378
Indications....378
Event recorder....378
Sequential of events....378
Trip value recorder....379
Disturbance recorder....379
Time tagging....379
Recording times....379
Analog signals....380
Binary signals....382
Trigger signals....382
Post Retrigger....383
Technical data....384
Indications....384
Functionality....384
Function block....385
Signals....385
Input signals....385
Operation principle....385
Technical data....386
Event recorder....386
Functionality....386
Function block....387
Signals....387
Input signals....387
Operation principle....387
Technical data....388
Sequential of events....388
Functionality....388
Function block....388
Signals....388
Input signals....388
Operation principle....388
Technical data....389
Trip value recorder....389
Functionality....389
Function block....389
Signals....390
Input signals....390
Operation principle....390

Technical data....390
Disturbance recorder....391
Functionality....391
Function block....391
Signals....391
Settings....391
Operation principle....391
Memory and storage....392
Technical data....394
IEC 61850 generic communication I/O functions SPGGIO....394
Identification....394
Functionality....394
Function block....394
Signals....395
Settings....395
Operation principle....395
IEC 61850 generic communication I/O functions 16 inputs SP16GGIO....395
Identification....395
Functionality....395
Function block....396
Signals....396
Settings....397
MonitoredData....397
Operation principle....398
IEC 61850 generic communication I/O functions MVGGIO....398
Identification....398
Functionality....398
Function block....398
Signals....399
Settings....399
Monitored data....400
Operation principle....400
Measured value expander block MVEXP....400
Identification....400
Functionality....400
Function block....401
Signals....401
Settings....401
Operation principle....401

Table of contents

Station battery supervision SPVNZBAT....402
Identification....402
Function block....402
Functionality....402
Signals....403
Settings....403
Measured values....404
Monitored Data....404
Operation principle 404
Technical data....405
Insulation gas monitoring function SSIMG (63)....405
Identification....405
Functionality....406
Function block....406
Signals....406
SSIMG InputSignals....406
SSIMG OutputSignals....407
Settings....407
SSIMG Settings....407
Operation principle....408
Technical data....408
Insulation liquid monitoring function SSIML (71)....408
Identification....408
Functionality....409
Function block....409
Signals....409
SSIML InputSignals....409
SSIML OutputSignals....410
Settings....410
SSIML Settings....410
Operation principle....411
Technical data....411
Circuit breaker condition monitoring SSCBR....411
Identification....411
Functionality....412
Function block....412
Signals....412
Settings....413
Monitored data....414
Operation principle....415

Circuit breaker status....416
Circuit breaker operation monitoring....417
Breaker contact travel time....418
Operation counter....420
Accumulation of I^yt....420
Remaining life of the circuit breaker....422
Circuit breaker spring charged indication....423
Gas pressure supervision....424
Technical data....425
Measurands for IEC 60870-5-103 I103MEAS....425
Functionality....425
Function block....426
Signals....427
Settings....427
Measurands user defined signals for IEC 60870-5-103 I103MEASUSR....428
Functionality....428
Function block....428
Signals....428
Settings....429
Function status auto-recloser for IEC 60870-5-103 I103AR....429
Functionality....429
Function block....430
Signals....430
Settings....430
Function status ground-fault for IEC 60870-5-103 I103EF....430
Functionality....430
Function block....431
Signals....431
Settings....431
Function status fault protection for IEC 60870-5-103 I103FLTPROT....431
Functionality....431
Function block....432
Signals....432
Settings....433
IED status for IEC 60870-5-103 I103IED....434
Functionality....434
Function block....434
Signals....434

Settings....434
Supervison status for IEC 60870-5-103 I103SUPERV....435
Functionality....435
Function block....435
Signals....435
Settings....435
Status for user defined signals for IEC 60870-5-103 I103USRDEF....436
Functionality....436
Function block....436
Signals....437
Settings....437

Section 14 Metering....439
Pulse counter PCGGIO....439
Identification....439
Functionality....439
Function block....439
Signals....440
Settings....440
Monitored data....441
Operation principle....441
Technical data....442
Energy calculation and demand handling ETPMMTR....443
Identification....443
Functionality....443
Function block....443
Signals....444
Settings....445
Monitored data....446
Operation principle....446
Technical data....447

Section 15 Station communication....449
DNP3 protocol....449
IEC 61850-8-1 communication protocol....449
Identification....449
Functionality....449
Communication interfaces and protocols....450
Settings....450
Technical data....451
Horizontal communication via GOOSE for interlocking....451

Identification....451
Function block....452
Signals....452
Settings....454
Goose binary receive GOOSEBINRCV....454
Identification....454
Function block....455
Signals....455
Settings....456
GOOSE VCTR configuration for send and receive GOOSEVCTRCONF....457
Identification....457
Functionality....457
Settings....457
GOOSE voltage control receiving block GOOSEVCTRRCV....458
Identification....458
Functionality....458
Function block....458
Signals....458
Operation principle....459
GOOSE function block to receive a double point value GOOSEDPRCV....459
Identification....459
Functionality....460
Function block....460
Signals....460
Settings....460
Operation principle....460
GOOSE function block to receive an integer value GOOSEINTRCV....461
Identification....461
Functionality....461
Function block....461
Signals....462
Settings....462
Operation principle....462
GOOSE function block to receive a measurand value GOOSEMVRCV....463
Identification....463
Functionality....463

Function block....463
Signals....463
Settings....464
Operation principle....464
GOOSE function block to receive a single point value GOOSESPRCV....464
Identification....464
Functionality....465
Function block....465
Signals....465
Settings....465
Operation principle....465
IEC 60870-5-103 communication protocol....466
Functionality....466
Settings....467

Section 16 Basic IED functions....469
Self supervision with internal event list....469
Functionality....469
Internal error signals INTERRSIG....469
Identification....469
Function block....469
Signals....470
Settings....470
Internal event list SELFSUPEVLST....470
Identification....470
Settings....470
Operation principle....470
Internal signals....473
Run-time model....474
Technical data....475
Time synchronization....476
Functionality....476
Time synchronization TIMESYNCHGEN....476
Identification....476
Settings....476
Time synchronization via SNTP....476
Identification....476
Settings....477
Time system, summer time begin DSTBEGIN....477

Identification....477
Settings....478
Time system, summer time ends DSTEND....478
Identification....478
Settings....479
Time zone from UTC TIMEZONE....479
Identification....479
Settings....479
Time synchronization via IRIG-B....480
Identification....480
Settings....480
Operation principle....480
General concepts....480
Real-time clock (RTC) operation....482
Synchronization alternatives....483
Technical data....484
Parameter setting group handling....484
Functionality....484
Setting group handling SETGRPS....485
Identification....485
Settings....485
Parameter setting groups ACTVGRP....485
Identification....485
Function block....485
Signals....486
Settings....486
Operation principle....486
Test mode functionality TESTMODE....487
Identification....487
Functionality....488
Function block....488
Signals....488
Settings....489
Operation principle....489
Change lock function CHNGLCK 490
Identification....490
Functionality....490
Function block....491
Signals....491
Settings....491

Operation principle....491
IED identifiers TERMINALID....492
Identification....492
Functionality....492
Settings....492
Product information....493
Identification....493
Functionality....493
Settings....493
Primary system values PRIMVAL....494
Identification....494
Functionality....494
Settings....494
Signal matrix for analog inputs SMAI....494
Functionality....494
Identification....495
Function block....495
Signals....496
Settings....497
Operation principle....499
Summation block 3 phase 3PHSUM....503
Identification....503
Functionality....503
Function block....503
Signals....503
Settings....504
Operation principle....504
Global base values GBASVAL....504
Identification....505
Functionality....505
Settings....505
Authority check ATHCHCK....505
Identification....505
Functionality....506
Settings....506
Operation principle....506
Authorization handling in the IED....507
Authority status ATHSTAT....507
Identification....507
Functionality....508

Function block....508
Signals....508
Settings....508
Operation principle....508
Denial of service....509
Functionality....509
Denial of service, frame rate control for front port DOSFRNT....509
Identification....509
Function block....509
Signals....509
Settings....510
Monitored data....510
Denial of service, frame rate control for LAN1 port DOSLAN1....510
Identification....510
Function block....511
Signals....511
Settings....511
Monitored data....511
Operation principle....512

Section 17 IED physical connections....513
Protective ground connections....513
Inputs....514
Measuring inputs....514
Auxiliary supply voltage input....514
Binary inputs....515
Outputs....518
Outputs for tripping, controlling and signalling....518
Outputs for signalling....520
IRF....523
Communication connections....523
Ethernet RJ-45 front connection....523
Station communication rear connection....524
Optical serial rear connection....524
EIA-485 serial rear connection....524
Communication interfaces and protocols....525
Recommended industrial Ethernet switches....525
Connection diagrams....525
Connection diagrams for 650 series....526
Connection diagrams for RET650 A01A....535

Connection diagrams for RET650 A05A.....544
Connection diagrams for RET650 A07A.....554

Section 18 Technical data.....563
Dimensions.....563
Power supply.....563
Energizing inputs.....564
Binary inputs.....564
Signal outputs.....565
Power outputs.....565
Data communication interfaces.....566
Enclosure class.....567
Environmental conditions and tests.....568

Section 19 IED and functionality tests.....569
Electromagnetic compatibility tests.....569
Insulation tests.....571
Mechanical tests.....571
Product safety.....571
EMC compliance.....572

Section 20 Time inverse characteristics.....573
Application.....573
Operation principle.....576
Mode of operation.....576
Inverse time characteristics.....579

Section 21 Glossary.....603

Section 1 Introduction

1.1 This manual

The technical manual contains application and functionality descriptions and lists function blocks, logic diagrams, input and output signals, setting parameters and technical data sorted per function. The manual can be used as a technical reference during the engineering phase, installation and commissioning phase, and during normal service.

1.2 Intended audience

This manual addresses system engineers and installation and commissioning personnel, who use technical data during engineering, installation and commissioning, and in normal service.

The system engineer must have a thorough knowledge of protection systems, protection equipment, protection functions and the configured functional logic in the IEDs. The installation and commissioning personnel must have a basic knowledge in handling electronic equipment.

1.3 Product documentation

1.3.1 Product documentation set

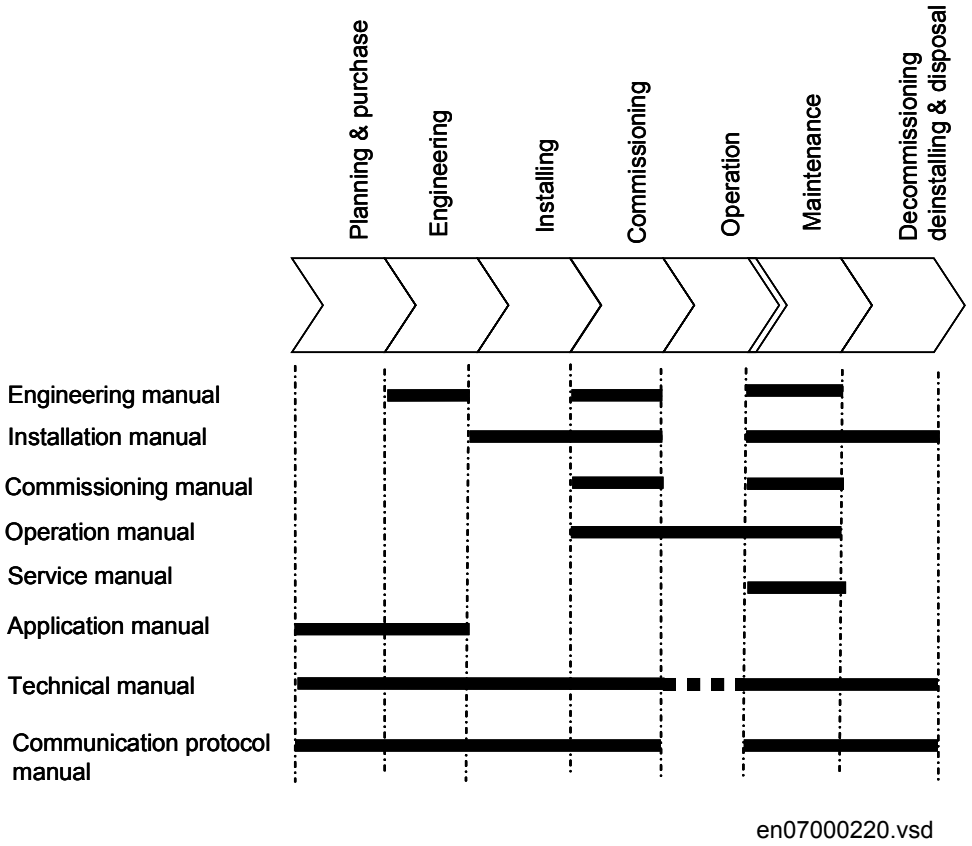

Figure 1: The intended use of manuals in different lifecycles

The engineering manual contains instructions on how to engineer the IEDs using the different tools in PCM600. The manual provides instructions on how to set up a PCM600 project and insert IEDs to the project structure. The manual also recommends a sequence for engineering of protection and control functions, LHMI functions as well as communication engineering for IEC 60870-5-103, IEC 61850 and DNP3.

The installation manual contains instructions on how to install the IED. The manual provides procedures for mechanical and electrical installation. The chapters are organized in chronological order in which the IED should be installed.

The commissioning manual contains instructions on how to commission the IED. The manual can also be used by system engineers and maintenance personnel for assistance

during the testing phase. The manual provides procedures for checking of external circuitry and energizing the IED, parameter setting and configuration as well as verifying settings by secondary injection. The manual describes the process of testing an IED in a substation which is not in service. The chapters are organized in chronological order in which the IED should be commissioned.

The operation manual contains instructions on how to operate the IED once it has been commissioned. The manual provides instructions for monitoring, controlling and setting the IED. The manual also describes how to identify disturbances and how to view calculated and measured power grid data to determine the cause of a fault.

The service manual contains instructions on how to service and maintain the IED. The manual also provides procedures for de-energizing, de-commissioning and disposal of the IED.

The application manual contains application descriptions and setting guidelines sorted per function. The manual can be used to find out when and for what purpose a typical protection function can be used. The manual can also be used when calculating settings.

The technical manual contains application and functionality descriptions and lists function blocks, logic diagrams, input and output signals, setting parameters and technical data sorted per function. The manual can be used as a technical reference during the engineering phase, installation and commissioning phase, and during normal service.

The communication protocol manual describes a communication protocol supported by the IED. The manual concentrates on vendor-specific implementations.

The point list manual describes the outlook and properties of the data points specific to the IED. The manual should be used in conjunction with the corresponding communication protocol manual.

1.3.2 Document revision history

Document revision/date	History
-/March 2012	First release
A/May 2012	Technical data updated for Inverse characteristic time over current.
B/June 2012	Function names updated. Technical data updated for HZPDIF

1.3.3 Related documents

Documents related to RET650	Identity number
Application manual	1MRK 504 128-UUS
Technical manual	1MRK 504 129-UUS
Commissioning manual	1MRK 504 130-UUS
Product Guide, configured	1MRK 504 131-BUS
Type test certificate	1MRK 504 131-TUS
Application notes for Circuit Breaker Control	1MRG006806

650 series manuals	Identity number
Communication protocol manual, DNP3	1MRK 511 257-UUS
Communication protocol manual, IEC 61850–8–1	1MRK 511 258-UUS
Communication protocol manual, IEC 60870-5-103	1MRK 511 259-UUS
Cyber Security deployment guidelines	1MRK 511 268-UUS
Point list manual, DNP3	1MRK 511 260-UUS
Engineering manual	1MRK 511 261-UUS
Operation manual	1MRK 500 095-UUS
Installation manual	1MRK 514 015-UUS

1.4 Symbols and conventions

1.4.1 Symbols

The electrical warning icon indicates the presence of a hazard which could result in electrical shock.

The warning icon indicates the presence of a hazard which could result in personal injury.

The caution icon indicates important information or warning related to the concept discussed in the text. It might indicate the presence of a hazard which could result in corruption of software or damage to equipment or property.

The information icon alerts the reader of important facts and conditions.

The tip icon indicates advice on, for example, how to design your project or how to use a certain function.

Although warning hazards are related to personal injury, it is necessary to understand that under certain operational conditions, operation of damaged equipment may result in degraded process performance leading to personal injury or death. Therefore, comply fully with all warning and caution notices.

1.4.2 Document conventions

A particular convention may not be used in this manual.

- Abbreviations and acronyms in this manual are spelled out in the glossary. The glossary also contains definitions of important terms.
- Push button navigation in the LHMI menu structure is presented by using the push button icons.
  To navigate between the options, use and .
- HMI menu paths are presented in bold.
  Select **Main menu/Settings**.
- LHMI messages are shown in Courier font.
  To save the changes in non-volatile memory, select `Yes` and press .
- Parameter names are shown in italics.
  The function can be enabled and disabled with the *Operation* setting.
- The ^ character in front of an input or output signal name in the function block symbol given for a function, indicates that the user can set an own signal name in PCM600.
- The * character after an input or output signal name in the function block symbol given for a function, indicates that the signal must be connected to another function block in the application configuration to achieve a valid application configuration.
- Dimensions are provided both in inches and mm. If it is not specifically mentioned then the dimension is in mm.

Section 2 Available functions

2.1 Main protection functions

IEC 61850/ Function block name	ANSI	Function description	Transformer			
			RET650	RET650 (A01A) 2W/1CB	RET650 (A05A) 3W/1CB	RET650 (A07A) OLTC
Differential protection						
T2WPDIF	87T	Transformer differential protection, two winding	0–1	1		
T3WPDIF	87T	Transformer differential protection, three winding	0–1		1	
REFPDIF	87N	Restricted earth fault protection, low impedance	0–3	2	3	
HZPDIF	87	1Ph High impedance differential protection	0–2	2	2	

2.2 Back-up protection functions

IEC 61850/ Function block name	ANSI	Function description	Transformer			
			RET650	RET650 (A01A) 2W/1CB	RET650 (A05A) 3W/1CB	RET650 (A07A) OLTC
Current protection						
PHPIOC	50	Instantaneous phase overcurrent protection, 3–phase output	0–3	2	3	
OC4PTOC	51	Four step phase overcurrent protection, 3–phase output		2		2
OC4PTOC	51/67	Four step directional phase protection, 3–phase output	0–3		3	
EFPIOC	50N	Instantaneous residual overcurrent protection	0–3	2	3	
EF4PTOC	51N/67N	Four step residual overcurrent protection, zero/ negative sequence direction	0–3	2	3	2

Table continues on next page

IEC 61850/ Function block name	ANSI	Function description	Transformer			
			RET650	RET650 (A01A) 2W/1CB	RET650 (A05A) 3W/1CB	RET650 (A07A) OLTC
TRPTTR	49	Thermal overload protection, two time constants	0–3	2	3	2
CCRBRF	50BF	Breaker failure protection, 3–phase activation and output	0–3	2	3	
CCRPLD	52PD	Pole discordance protection	0–3	2	3	
GUPPDUP	37	Directional underpower protection	0–2	1	1	2
GOPPDOP	32	Directional overpower protection	0–2	1	1	2
DNSPTOC	46	Negative sequence based overcurrent function	0–2	1	2	
Voltage protection						
UV2PTUV	27	Two step undervoltage protection	0–2	1	1	2
OV2PTOV	59	Two step overvoltage protection	0–2	1	1	2
ROV2PTOV	59N	Two step residual overvoltage protection	0–2	1	1	2
OEXPVPH	24	Overexcitation protection	0–1	1	1	
Frequency protection						
SAPTUF	81	Underfrequency function	0–4	4	4	4
SAPTOF	81	Overfrequency function	0–4	4	4	4
SAPFRC	81	Rate-of-change frequency protection	0–4	2	2	4

2.3 Control and monitoring functions

IEC 61850/Function block name	ANSI	Function description	Transformer			
			RET650	RET650 (A01A) 2W/1CB	RET650 (A05A) 3W/1CB	RET650 (A07A) OLTC
Control						
QCBAY		Bay control	1	1	1	1
LOCREM		Handling of LR-switch positions	1	1	1	1
LOCREMCTRL		LHMI control of Permitted Source To Operate (PSTO)	1	1	1	1
CBC2		Circuit breaker for 2CB	0–1	1		
CBC3		Circuit breaker for 3CB	0–1		1	

Table continues on next page

IEC 61850/Function block name	ANSI	Function description	Transformer			
			RET650	RET650 (A01A) 2W/1CB	RET650 (A05A) 3W/1CB	RET650 (A07A) OLTC
CBC4		Circuit breaker for 4CB	0–1			1
TR8ATCC	90	Automatic voltage control for tap changer, parallel control	0–2	1	1	2
TCMYLTC	84	Tap changer control and supervision, 6 binary inputs	0–2	1	1	2
SLGGIO		Logic Rotating Switch for function selection and LHMI presentation	15	15	15	15
VSGGIO		Selector mini switch extension	20	20	20	20
DPGGIO		IEC 61850 generic communication I/O functions double point	16	16	16	16
SPC8GGIO		Single point generic control 8 signals	5	5	5	5
AUTOBITS		AutomationBits, command function for DNP3.0	3	3	3	3
I103CMD		Function commands for IEC60870-5-103	1	1	1	1
I103IEDCMD		IED commands for IEC60870-5-103	1	1	1	1
I103USRCMD		Function commands user defined for IEC60870-5-103	4	4	4	4
I103GENCMD		Function commands generic for IEC60870-5-103	50	50	50	50
I103POSCMD		IED commands with position and select for IEC60870-5-103	50	50	50	50
Secondary system supervision						
TCSSCBR		Breaker close/trip circuit monitoring	3	3	3	3
Logic						
SMPPTRC	94	Tripping logic, common 3–phase output	1–3	2	3	2
TMAGGIO		Trip matrix logic	12	12	12	12
OR		Configurable logic blocks, OR gate	283	283	283	283
INVERTER		Configurable logic blocks, Inverter gate	140	140	140	140
PULSETIMER		Configurable logic blocks, Pulse timer	40	40	40	40
GATE		Configurable logic blocks, Controllable gate	40	40	40	40
XOR		Configurable logic blocks, exclusive OR gate	40	40	40	40
LOOPDELAY		Configurable logic blocks, loop delay	40	40	40	40
TIMERSET		Configurable logic blocks, timer function block	40	40	40	40
AND		Configurable logic blocks, AND gate	280	280	280	280
SRMEMORY		Configurable logic blocks, set-reset memory flip-flop gate	40	40	40	40

Table continues on next page

IEC 61850/Function block name	ANSI	Function description	Transformer			
			RET650	RET650 (A01A) 2W/1CB	RET650 (A05A) 3W/1CB	RET650 (A07A) OLTC
RSMEMORY		Configurable logic blocks, reset-set memory flip-flop gate	40	40	40	40
FXDSIGN		Fixed signal function block	1	1	1	1
B16I		Boolean 16 to Integer conversion	16	16	16	16
B16IFCVI		Boolean 16 to Integer conversion with logic node representation	16	16	16	16
IB16A		Integer to Boolean 16 conversion	16	16	16	16
IB16FCVB		Integer to Boolean 16 conversion with logic node representation	16	16	16	16
Monitoring						
CVMMXN		Measurements	6	6	6	6
CMMXU		Phase current measurement	10	10	10	10
VMMXU		Phase-phase voltage measurement	6	6	6	6
CMSQI		Current sequence component measurement	6	6	6	6
VMSQI		Voltage sequence measurement	6	6	6	6
VNMMXU		Phase-neutral voltage measurement	6	6	6	6
AISVBAS		Function block for service values presentation of the analog inputs	1	1	1	1
TM_P_P2		Function block for service values presentation of primary analog inputs 600TRM	1	1	1	1
AM_P_P4		Function block for service values presentation of primary analog inputs 600AIM	1	1	1	1
TM_S_P2		Function block for service values presentation of secondary analog inputs 600TRM	1	1	1	1
AM_S_P4		Function block for service values presentation of secondary analog inputs 600AIM	1	1	1	1
CNTGGIO		Event counter	5	5	5	5
DRPRDRE		Disturbance report	1	1	1	1
AxRADR		Analog input signals	4	4	4	4
BxRBDR		Binary input signals	6	6	6	6
SPGGIO		IEC 61850 generic communication I/O functions	64	64	64	64
SP16GGIO		IEC 61850 generic communication I/O functions 16 inputs	16	16	16	16
MVGGIO		IEC 61850 generic communication I/O functions	16	16	16	16
MVEXP		Measured value expander block	66	66	66	66

Table continues on next page

IEC 61850/Function block name	ANSI	Function description	Transformer			
			RET650	RET650 (A01A) 2W/1CB	RET650 (A05A) 3W/1CB	RET650 (A07A) OLTC
SPVNZBAT		Station battery supervision	0–1	1	1	1
SSIMG	63	Insulation gas monitoring function	0–2	2	2	2
SSIML	71	Insulation liquid monitoring function	0–2	2	2	2
SSCBR		Circuit breaker condition monitoring	0–3	2	3	2
I103MEAS		Measurands for IEC60870-5-103	1	1	1	1
I103MEASUSR		Measurands user defined signals for IEC60870-5-103	3	3	3	3
I103AR		Function status auto-recloser for IEC60870-5-103	1	1	1	1
I103EF		Function status ground-fault for IEC60870-5-103	1	1	1	1
I103FLTPROT		Function status fault protection for IEC60870-5-103	1	1	1	1
I103IED		IED status for IEC60870-5-103	1	1	1	1
I103SUPERV		Supervison status for IEC60870-5-103	1	1	1	1
I103USRDEF		Status for user defined signals for IEC60870-5-103	20	20	20	20
Metering						
PCGGIO		Pulse counter logic	16	16	16	16
ETPMMTR		Function for energy calculation and demand handling	3	3	3	3

2.4 Communication

IEC 61850/Function block name	ANSI	Function description	Transformer			
			RET650	RET650 (A01A) 2W/1CB	RET650 (A05A) 3W/1CB	RET650 (A07A) OLTC
Station communication						
IEC61850-8-1		IEC 61850 communication protocol	1	1	1	1
DNPGEN		DNP3.0 for TCP/IP communication protocol	1	1	1	1
RS485DNP		DNP3.0 for EIA-485 communication protocol	1	1	1	1
CH1TCP		DNP3.0 for TCP/IP communication protocol	1	1	1	1

Table continues on next page

IEC 61850/Function block name	ANSI	Function description	Transformer			
			RET650	RET650 (A01A) 2W/1CB	RET650 (A05A) 3W/1CB	RET650 (A07A) OLTC
CH2TCP		DNP3.0 for TCP/IP communication protocol	1	1	1	1
CH3TCP		DNP3.0 for TCP/IP communication protocol	1	1	1	1
CH4TCP		DNP3.0 for TCP/IP communication protocol	1	1	1	1
OPTICALDNP		DNP3.0 for optical serial communication	1	1	1	1
MSTSERIAL		DNP3.0 for serial communication protocol	1	1	1	1
MST1TCP		DNP3.0 for TCP/IP communication protocol	1	1	1	1
MST2TCP		DNP3.0 for TCP/IP communication protocol	1	1	1	1
MST3TCP		DNP3.0 for TCP/IP communication protocol	1	1	1	1
MST4TCP		DNP3.0 for TCP/IP communication protocol	1	1	1	1
RS485GEN		RS485	1	1	1	1
OPTICALPROT		Operation selection for optical serial	1	1	1	1
RS485PROT		Operation selection for RS485	1	1	1	1
DNPFREC		DNP3.0 fault records for TCP/IP communication protocol	1	1	1	1
OPTICAL103		IEC60870-5-103 Optical serial communication	1	1	1	1
RS485103		IEC60870-5-103 serial communication for RS485	1	1	1	1
GOOSEINTLKRCV		Horizontal communication via GOOSE for interlocking	59	59	59	59
GOOSEBINRCV		GOOSE binary receive	4	4	4	4
GOOSEVCTRCONF		GOOSE VCTR configuration for send and receive	1	1	1	1
VCTRSEND		Voltage control sending block for GOOSE	1	1	1	1
GOOSEVCTRRCV		Voltage control receiving block for GOOSE	3	3	3	3
ETHFRNT ETHLAN1 GATEWAY		Ethernet configuration of front port, LAN1 port and gateway	1	1	1	1
GOOSEDPRCV		GOOSE function block to receive a double point value	32	32	32	32
GOOSEINTRCV		GOOSE function block to receive an integer value	32	32	32	32
GOOSEMVRCV		GOOSE function block to receive a measurand value	16	16	16	16
GOOSESPRCV		GOOSE function block to receive a single point value	64	64	64	64

2.5 Basic IED functions

IEC 61850/Function block name	Function description	
Basic functions included in all products		
INTERRSIG	Self supervision with internal event list	1
SELFSUPEVLST	Self supervision with internal event list	1
TIMESYNCHGEN	Time synchronization	1
SNTP	Time synchronization	1
DTSBEGIN, DTSEND, TIMEZONE	Time synchronization, daylight saving	1
IRIG-B	Time synchronization	1
SETGRPS	Setting group handling	1
ACTVGRP	Parameter setting groups	1
TESTMODE	Test mode functionality	1
CHNGLCK	Change lock function	1
TERMINALID	IED identifiers	1
PRODINF	Product information	1
SYSTEMTIME	System time	1
RUNTIME	IED Runtime comp	1
PRIMVAL	Primary system values	1
SMAI_20_1 - SMAI_20_12	Signal matrix for analog inputs	2
3PHSUM	Summation block 3 phase	12
GBASVAL	Global base values for settings	6
ATHSTAT	Authority status	1
ATHCHCK	Authority check	1
SPACOMMMAP	SPA communication mapping	1
FTPACCS	FTP access with password	1
DOSFRNT	Denial of service, frame rate control for front port	1
DOSLAN1	Denial of service, frame rate control for LAN1	1
DOSSCKT	Denial of service, socket flow control	1
SAFEFILECOPY	Safe file copy function	1
SPATD	Date and time via SPA protocol	1
BCSCONF	Basic communication system	1

Section 3 Analog inputs

3.1 Introduction

Analog input channels are already configured inside the IED. However the IED has to be set properly to get correct measurement results and correct protection operations. For power measuring and all directional and differential functions the directions of the input currents must be defined properly. Measuring and protection algorithms in the IED use primary system quantities. Setting values are in primary quantities as well and it is important to set the transformation ratio of the connected current and voltage transformers properly.

The availability of CT and VT inputs, as well as setting parameters depends on the ordered IED.

A reference *PhaseAngleRef* must be defined to facilitate service values reading. This analog channels phase angle will always be fixed to zero degrees and all other angle information will be shown in relation to this analog input. During testing and commissioning of the IED the reference channel can be changed to facilitate testing and service values reading.

3.2 Operation principle

The direction of a current depends on the connection of the CT. The main CTs are typically star (WYE) connected and can be connected with the Star (WYE) point to the object or from the object. This information must be set in the IED.

The convention of the directionality is defined as follows:

- Positive value of current or power means that the quantity has the direction into the object.
- Negative value of current or power means that the quantity has the direction out from the object.

For directional functions the directional conventions are defined as follows (see figure 2)

- *Forward* means direction into the object.
- *Reverse* means direction out from the object.

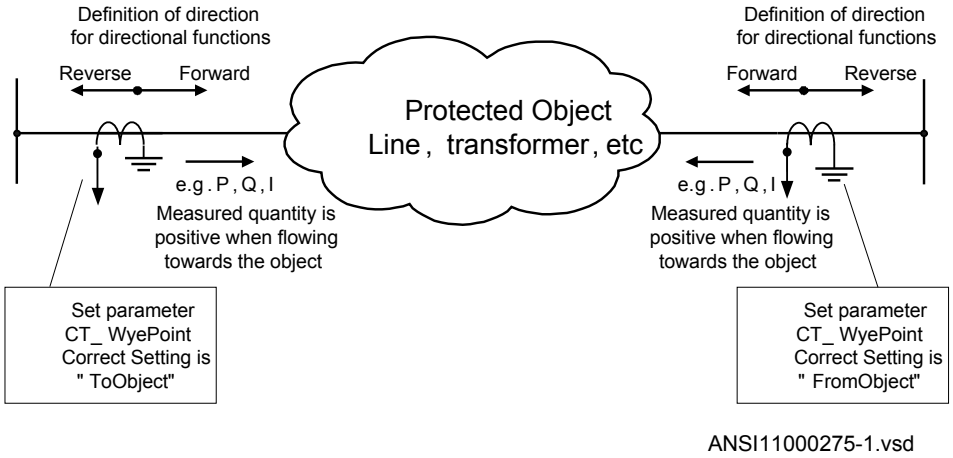

Figure 2: Internal convention of the directionality in the IED

If the settings of the primary CT is right, that is *CTStarPoint* set as *FromObject* or *ToObject* according to the plant condition, then a positive quantity always flows towards the protected object, and a *Forward* direction always looks towards the protected object.

The settings of the IED is performed in primary values. The ratios of the main CTs and VTs are therefore basic data for the IED. The user has to set the rated secondary and primary currents and voltages of the CTs and VTs to provide the IED with their rated ratios.

The CT and VT ratio and the name on respective channel is done under **Main menu/ Hardware/Analog modules** in the Parameter Settings tool.

3.3 Settings

Dependent on ordered IED type.

Table 1: AISVBAS Non group settings (basic)

Name	Values (Range)	Unit	Step	Default	Description
PhaseAngleRef	TRM - Channel 1 TRM - Channel 2 TRM - Channel 3 TRM - Channel 4 TRM - Channel 5 TRM - Channel 6 TRM - Channel 7 TRM - Channel 8 TRM - Channel 9 TRM - Channel 10	-	-	TRM - Channel 1	Reference channel for phase angle presentation

Table 2: TRM_6I_4U Non group settings (basic)

Name	Values (Range)	Unit	Step	Default	Description
CT_WyePoint1	FromObject ToObject	-	-	ToObject	ToObject= towards protected object, FromObject= the opposite
CTsec1	0.1 - 10.0	A	0.1	1	Rated CT secondary current
CTprim1	1 - 99999	A	1	1000	Rated CT primary current
CT_WyePoint2	FromObject ToObject	-	-	ToObject	ToObject= towards protected object, FromObject= the opposite
CTsec2	0.1 - 10.0	A	0.1	1.0	Rated CT secondary current
CTprim2	1 - 99999	A	1	1000	Rated CT primary current
CT_WyePoint3	FromObject ToObject	-	-	ToObject	ToObject= towards protected object, FromObject= the opposite
CTsec3	0.1 - 10.0	A	0.1	1	Rated CT secondary current
CTprim3	1 - 99999	A	1	1000	Rated CT primary current
CT_WyePoint4	FromObject ToObject	-	-	ToObject	ToObject= towards protected object, FromObject= the opposite
CTsec4	0.1 - 10.0	A	0.1	1.0	Rated CT secondary current
CTprim4	1 - 99999	A	1	1000	Rated CT primary current
CT_WyePoint5	FromObject ToObject	-	-	ToObject	ToObject= towards protected object, FromObject= the opposite
CTsec5	0.1 - 10.0	A	0.1	1	Rated CT secondary current
CTprim5	1 - 99999	A	1	1000	Rated CT primary current
CT_WyePoint6	FromObject ToObject	-	-	ToObject	ToObject= towards protected object, FromObject= the opposite
CTsec6	0.1 - 10.0	A	0.1	1.0	Rated CT secondary current
CTprim6	1 - 99999	A	1	1000	Rated CT primary current
VTsec7	0.001 - 999.999	V	0.001	110.000	Rated VT secondary voltage
VTprim7	0.001 - 9999.999	kV	0.001	132.000	Rated VT primary voltage
VTsec8	0.001 - 999.999	V	0.001	110	Rated VT secondary voltage

Table continues on next page

Name	Values (Range)	Unit	Step	Default	Description
VTprim8	0.001 - 9999.999	kV	0.001	132	Rated VT primary voltage
VTsec9	0.001 - 999.999	V	0.001	110.000	Rated VT secondary voltage
VTprim9	0.001 - 9999.999	kV	0.001	132.000	Rated VT primary voltage
VTsec10	0.001 - 999.999	V	0.001	110	Rated VT secondary voltage
VTprim10	0.001 - 9999.999	kV	0.001	132	Rated VT primary voltage

Table 3: TRM_8I_2U Non group settings (basic)

Name	Values (Range)	Unit	Step	Default	Description
CT_WyePoint1	FromObject ToObject	-	-	ToObject	ToObject= towards protected object, FromObject= the opposite
CTsec1	0.1 - 10.0	A	0.1	1	Rated CT secondary current
CTprim1	1 - 99999	A	1	1000	Rated CT primary current
CT_WyePoint2	FromObject ToObject	-	-	ToObject	ToObject= towards protected object, FromObject= the opposite
CTsec2	0.1 - 10.0	A	0.1	1.0	Rated CT secondary current
CTprim2	1 - 99999	A	1	1000	Rated CT primary current
CT_WyePoint3	FromObject ToObject	-	-	ToObject	ToObject= towards protected object, FromObject= the opposite
CTsec3	0.1 - 10.0	A	0.1	1	Rated CT secondary current
CTprim3	1 - 99999	A	1	1000	Rated CT primary current
CT_WyePoint4	FromObject ToObject	-	-	ToObject	ToObject= towards protected object, FromObject= the opposite
CTsec4	0.1 - 10.0	A	0.1	1.0	Rated CT secondary current
CTprim4	1 - 99999	A	1	1000	Rated CT primary current
CT_WyePoint5	FromObject ToObject	-	-	ToObject	ToObject= towards protected object, FromObject= the opposite
CTsec5	0.1 - 10.0	A	0.1	1	Rated CT secondary current
CTprim5	1 - 99999	A	1	1000	Rated CT primary current
CT_WyePoint6	FromObject ToObject	-	-	ToObject	ToObject= towards protected object, FromObject= the opposite
CTsec6	0.1 - 10.0	A	0.1	1.0	Rated CT secondary current
CTprim6	1 - 99999	A	1	1000	Rated CT primary current
CT_WyePoint7	FromObject ToObject	-	-	ToObject	ToObject= towards protected object, FromObject= the opposite
CTsec7	0.1 - 10.0	A	0.1	1	Rated CT secondary current
CTprim7	1 - 99999	A	1	1000	Rated CT primary current
CT_WyePoint8	FromObject ToObject	-	-	ToObject	ToObject= towards protected object, FromObject= the opposite
CTsec8	0.1 - 10.0	A	0.1	1.0	Rated CT secondary current

Table continues on next page

Name	Values (Range)	Unit	Step	Default	Description
CTprim8	1 - 99999	A	1	1000	Rated CT primary current
VTsec9	0.001 - 999.999	V	0.001	110.000	Rated VT secondary voltage
VTprim9	0.001 - 9999.999	kV	0.001	132.000	Rated VT primary voltage
VTsec10	0.001 - 999.999	V	0.001	110	Rated VT secondary voltage
VTprim10	0.001 - 9999.999	kV	0.001	132	Rated VT primary voltage

Table 4: TRM_4I_1I_5U Non group settings (basic)

Name	Values (Range)	Unit	Step	Default	Description
CT_WyePoint1	FromObject ToObject	-	-	ToObject	ToObject= towards protected object, FromObject= the opposite
CTsec1	0.1 - 10.0	A	0.1	1	Rated CT secondary current
CTprim1	1 - 99999	A	1	1000	Rated CT primary current
CT_WyePoint2	FromObject ToObject	-	-	ToObject	ToObject= towards protected object, FromObject= the opposite
CTsec2	0.1 - 10.0	A	0.1	1.0	Rated CT secondary current
CTprim2	1 - 99999	A	1	1000	Rated CT primary current
CT_WyePoint3	FromObject ToObject	-	-	ToObject	ToObject= towards protected object, FromObject= the opposite
CTsec3	0.1 - 10.0	A	0.1	1	Rated CT secondary current
CTprim3	1 - 99999	A	1	1000	Rated CT primary current
CT_WyePoint4	FromObject ToObject	-	-	ToObject	ToObject= towards protected object, FromObject= the opposite
CTsec4	0.1 - 10.0	A	0.1	1.0	Rated CT secondary current
CTprim4	1 - 99999	A	1	1000	Rated CT primary current
CT_WyePoint5	FromObject ToObject	-	-	ToObject	ToObject= towards protected object, FromObject= the opposite
CTsec5	0.1 - 10.0	A	0.1	1	Rated CT secondary current
CTprim5	1 - 99999	A	1	1000	Rated CT primary current
VTsec6	0.001 - 999.999	V	0.001	110.000	Rated VT secondary voltage
VTprim6	0.001 - 9999.999	kV	0.001	132.000	Rated VT primary voltage
VTsec7	0.001 - 999.999	V	0.001	110	Rated VT secondary voltage
VTprim7	0.001 - 9999.999	kV	0.001	132	Rated VT primary voltage
VTsec8	0.001 - 999.999	V	0.001	110.000	Rated VT secondary voltage
VTprim8	0.001 - 9999.999	kV	0.001	132.000	Rated VT primary voltage
VTsec9	0.001 - 999.999	V	0.001	110	Rated VT secondary voltage
VTprim9	0.001 - 9999.999	kV	0.001	132	Rated VT primary voltage
VTsec10	0.001 - 999.999	V	0.001	110	Rated VT secondary voltage
VTprim10	0.001 - 9999.999	kV	0.001	132	Rated VT primary voltage

Table 5: AIM_6I_4U Non group settings (basic)

Name	Values (Range)	Unit	Step	Default	Description
CT_WyePoint1	FromObject ToObject	-	-	ToObject	ToObject= towards protected object, FromObject= the opposite
CTsec1	0.1 - 10.0	A	0.1	1	Rated CT secondary current
CTprim1	1 - 99999	A	1	1000	Rated CT primary current
CT_WyePoint2	FromObject ToObject	-	-	ToObject	ToObject= towards protected object, FromObject= the opposite
CTsec2	0.1 - 10.0	A	0.1	1.0	Rated CT secondary current
CTprim2	1 - 99999	A	1	1000	Rated CT primary current
CT_WyePoint3	FromObject ToObject	-	-	ToObject	ToObject= towards protected object, FromObject= the opposite
CTsec3	0.1 - 10.0	A	0.1	1	Rated CT secondary current
CTprim3	1 - 99999	A	1	1000	Rated CT primary current
CT_WyePoint4	FromObject ToObject	-	-	ToObject	ToObject= towards protected object, FromObject= the opposite
CTsec4	0.1 - 10.0	A	0.1	1.0	Rated CT secondary current
CTprim4	1 - 99999	A	1	1000	Rated CT primary current
CT_WyePoint5	FromObject ToObject	-	-	ToObject	ToObject= towards protected object, FromObject= the opposite
CTsec5	0.1 - 10.0	A	0.1	1	Rated CT secondary current
CTprim5	1 - 99999	A	1	1000	Rated CT primary current
CT_WyePoint6	FromObject ToObject	-	-	ToObject	ToObject= towards protected object, FromObject= the opposite
CTsec6	0.1 - 10.0	A	0.1	1.0	Rated CT secondary current
CTprim6	1 - 99999	A	1	1000	Rated CT primary current
VTsec7	0.001 - 999.999	V	0.001	110.000	Rated VT secondary voltage
VTprim7	0.001 - 9999.999	kV	0.001	132.000	Rated VT primary voltage
VTsec8	0.001 - 999.999	V	0.001	110	Rated VT secondary voltage
VTprim8	0.001 - 9999.999	kV	0.001	132	Rated VT primary voltage
VTsec9	0.001 - 999.999	V	0.001	110.000	Rated VT secondary voltage
VTprim9	0.001 - 9999.999	kV	0.001	132.000	Rated VT primary voltage
VTsec10	0.001 - 999.999	V	0.001	110	Rated VT secondary voltage
VTprim10	0.001 - 9999.999	kV	0.001	132	Rated VT primary voltage

Section 4 Binary input and output modules

4.1 Binary input

4.1.1 Binary input debounce filter

The debounce filter eliminates bounces and short disturbances on a binary input.

A time counter is used for filtering. The time counter is increased once in a millisecond when a binary input is high, or decreased when a binary input is low. A new debounced binary input signal is forwarded when the time counter reaches the set *DebounceTime* value and the debounced input value is high or when the time counter reaches 0 and the debounced input value is low. The default setting of *DebounceTime* is 5 ms.

The binary input ON-event gets the time stamp of the first rising edge, after which the counter does not reach 0 again. The same happens when the signal goes down to 0 again.

Each binary input has a filter time parameter *DebounceTimex*, where x is the number of the binary input of the module in question (for example *DebounceTime1*).

4.1.2 Oscillation filter

Binary input lines can be very long in substations and there are electromagnetic fields from, for example, nearby breakers. Floating input lines can result in binary input activity. These events are unwanted in the system. An oscillation filter is used to reduce the load from the system when a binary input starts oscillating.

Each debounced input signal change increments an oscillation counter. Every time the oscillation time counter reaches the set *OscillationTime*, the oscillation counter is checked and both the time counter and the oscillation counter are reset. If the counter value is above the set *OscillationCount* value the signal is declared as oscillating. If the value is below the set *OscillationCount* value, the signal is declared as valid again. During counting of the oscillation time the status of the signal remains unchanged, leading to a fixed delay in the status update, even if the signal has attained normal status again.

Each binary input has an oscillation count parameter *OscillationCountx* and an oscillation time parameter *OscillationTimex*, where x is the number of the binary input of the module in question.

4.1.3 Settings

4.1.3.1 Setting parameters for binary input modules

Table 6: BIO_9BI Non group settings (basic)

Name	Values (Range)	Unit	Step	Default	Description
BatteryVoltage	24 - 250	V	1	110	Station battery voltage

Table 7: BIO_9BI Non group settings (advanced)

Name	Values (Range)	Unit	Step	Default	Description
Threshold1	6 - 900	%VB	1	65	Threshold in percentage of station battery voltage for input 1
DebounceTime1	0.000 - 0.100	s	0.001	0.005	Debounce time for input 1
OscillationCount1	0 - 255	-	1	0	Oscillation count for input 1
OscillationTime1	0.000 - 600.000	s	0.001	0.000	Oscillation time for input 1
Threshold2	6 - 900	%VB	1	65	Threshold in percentage of station battery voltage for input 2
DebounceTime2	0.000 - 0.100	s	0.001	0.005	Debounce time for input 2
OscillationCount2	0 - 255	-	1	0	Oscillation count for input 2
OscillationTime2	0.000 - 600.000	s	0.001	0.000	Oscillation time for input 2
Threshold3	6 - 900	%VB	1	65	Threshold in percentage of station battery voltage for input 3
DebounceTime3	0.000 - 0.100	s	0.001	0.005	Debounce time for input 3
OscillationCount3	0 - 255	-	1	0	Oscillation count for input 3
OscillationTime3	0.000 - 600.000	s	0.001	0.000	Oscillation time for input 3
Threshold4	6 - 900	%VB	1	65	Threshold in percentage of station battery voltage for input 4
DebounceTime4	0.000 - 0.100	s	0.001	0.005	Debounce time for input 4
OscillationCount4	0 - 255	-	1	0	Oscillation count for input 4
OscillationTime4	0.000 - 600.000	s	0.001	0.000	Oscillation time for input 4
Threshold5	6 - 900	%VB	1	65	Threshold in percentage of station battery voltage for input 5
DebounceTime5	0.000 - 0.100	s	0.001	0.005	Debounce time for input 5
OscillationCount5	0 - 255	-	1	0	Oscillation count for input 5
OscillationTime5	0.000 - 600.000	s	0.001	0.000	Oscillation time for input 5
Threshold6	6 - 900	%VB	1	65	Threshold in percentage of station battery voltage for input 6
DebounceTime6	0.000 - 0.100	s	0.001	0.005	Debounce time for input 6
OscillationCount6	0 - 255	-	1	0	Oscillation count for input 6

Table continues on next page

Name	Values (Range)	Unit	Step	Default	Description
OscillationTime6	0.000 - 600.000	s	0.001	0.000	Oscillation time for input 6
Threshold7	6 - 900	%VB	1	65	Threshold in percentage of station battery voltage for input 7
DebounceTime7	0.000 - 0.100	s	0.001	0.005	Debounce time for input 7
OscillationCount7	0 - 255	-	1	0	Oscillation count for input 7
OscillationTime7	0.000 - 600.000	s	0.001	0.000	Oscillation time for input 7
Threshold8	6 - 900	%VB	1	65	Threshold in percentage of station battery voltage for input 8
DebounceTime8	0.000 - 0.100	s	0.001	0.005	Debounce time for input 8
DebounceTime8	0 - 255	-	1	0	Oscillation count for input 8
OscillationTime8	0.000 - 600.000	s	0.001	0.000	Oscillation time for input 8
Threshold9	6 - 900	%VB	1	65	Threshold in percentage of station battery voltage for input 9
DebounceTime9	0.000 - 0.100	s	0.001	0.005	Debounce time for input 9
OscillationCount9	0 - 255	-	1	0	Oscillation count for input 9
OscillationTime9	0.000 - 600.000	s	0.001	0.000	Oscillation time for input 9

4.1.3.2 Setting parameters for communication module

Table 8: COM05_12BI Non group settings (basic)

Name	Values (Range)	Unit	Step	Default	Description
BatteryVoltage	24 - 250	V	1	110	Station battery voltage

Table 9: COM05_12BI Non group settings (advanced)

Name	Values (Range)	Unit	Step	Default	Description
Threshold1	6 - 900	%VB	1	65	Threshold in percentage of station battery voltage for input 1
DebounceTime1	0.000 - 0.100	s	0.001	0.005	Debounce time for input 1
OscillationCount1	0 - 255	-	1	0	Oscillation count for input 1
OscillationTime1	0.000 - 600.000	s	0.001	0.000	Oscillation time for input 1
Threshold2	6 - 900	%VB	1	65	Threshold in percentage of station battery voltage for input 2
DebounceTime2	0.000 - 0.100	s	0.001	0.005	Debounce time for input 2
OscillationCount2	0 - 255	-	1	0	Oscillation count for input 2
OscillationTime2	0.000 - 600.000	s	0.001	0.000	Oscillation time for input 2
Threshold3	6 - 900	%VB	1	65	Threshold in percentage of station battery voltage for input 3
DebounceTime3	0.000 - 0.100	s	0.001	0.005	Debounce time for input 3

Table continues on next page

Name	Values (Range)	Unit	Step	Default	Description
OscillationCount3	0 - 255	-	1	0	Oscillation count for input 3
OscillationTime3	0.000 - 600.000	s	0.001	0.000	Oscillation time for input 3
Threshold4	6 - 900	%VB	1	65	Threshold in percentage of station battery voltage for input 4
DebounceTime4	0.000 - 0.100	s	0.001	0.005	Debounce time for input 4
OscillationCount4	0 - 255	-	1	0	Oscillation count for input 4
OscillationTime4	0.000 - 600.000	s	0.001	0.000	Oscillation time for input 4
Threshold5	6 - 900	%VB	1	65	Threshold in percentage of station battery voltage for input 5
DebounceTime5	0.000 - 0.100	s	0.001	0.005	Debounce time for input 5
OscillationCount5	0 - 255	-	1	0	Oscillation count for input 5
OscillationTime5	0.000 - 600.000	s	0.001	0.000	Oscillation time for input 5
Threshold6	6 - 900	%VB	1	65	Threshold in percentage of station battery voltage for input 6
DebounceTime6	0.000 - 0.100	s	0.001	0.005	Debounce time for input 6
OscillationCount6	0 - 255	-	1	0	Oscillation count for input 6
OscillationTime6	0.000 - 600.000	s	0.001	0.000	Oscillation time for input 6
Threshold7	6 - 900	%VB	1	65	Threshold in percentage of station battery voltage for input 7
DebounceTime7	0.000 - 0.100	s	0.001	0.005	Debounce time for input 7
OscillationCount7	0 - 255	-	1	0	Oscillation count for input 7
OscillationTime7	0.000 - 600.000	s	0.001	0.000	Oscillation time for input 7
Threshold8	6 - 900	%VB	1	65	Threshold in percentage of station battery voltage for input 8
DebounceTime8	0.000 - 0.100	s	0.001	0.005	Debounce time for input 8
DebounceTime8	0 - 255	-	1	0	Oscillation count for input 8
OscillationTime8	0.000 - 600.000	s	0.001	0.000	Oscillation time for input 8
Threshold9	6 - 900	%VB	1	65	Threshold in percentage of station battery voltage for input 9
DebounceTime9	0.000 - 0.100	s	0.001	0.005	Debounce time for input 9
OscillationCount9	0 - 255	-	1	0	Oscillation count for input 9
OscillationTime9	0.000 - 600.000	s	0.001	0.000	Oscillation time for input 9
Threshold10	6 - 900	%VB	1	65	Threshold in percentage of station battery voltage for input 10
Threshold10	0.000 - 0.100	s	0.001	0.005	Debounce time for input 10
OscillationCount10	0 - 255	-	1	0	Oscillation count for input 10
OscillationTime10	0.000 - 600.000	s	0.001	0.000	Oscillation time for input 10
Threshold11	6 - 900	%VB	1	65	Threshold in percentage of station battery voltage for input 11

Table continues on next page

Name	Values (Range)	Unit	Step	Default	Description
DebounceTime11	0.000 - 0.100	s	0.001	0.005	Debounce time for input 11
OscillationCount11	0 - 255	-	1	0	Oscillation count for input 11
OscillationTime11	0.000 - 600.000	s	0.001	0.000	Oscillation time for input 11
Threshold12	6 - 900	%VB	1	65	Threshold in percentage of station battery voltage for input 12
DebounceTime12	0.000 - 0.100	s	0.001	0.005	Debounce time for input 12
OscillationCount12	0 - 255	-	1	0	Oscillation count for input 12
OscillationTime12	0.000 - 600.000	s	0.001	0.000	Oscillation time for input 12

Section 5 Local Human-Machine-Interface LHMI

5.1 Local HMI screen behaviour

5.1.1 Identification

Function description	IEC 61850 identification	IEC 60617 identification	ANSI/IEEE C37.2 device number
Local HMI screen behaviour	SCREEN	-	-

5.1.2 Settings

Table 10: SCREEN Non group settings (basic)

Name	Values (Range)	Unit	Step	Default	Description
DisplayTimeout	10 - 120	Min	10	60	Local HMI display timeout
ContrastLevel	-100 - 100	%	10	0	Contrast level for display
DefaultScreen	Main menu Events Measurements Diagnostics Disturbance records Single Line Diagram	-	-	Main menu	Default screen
EvListSrtOrder	Latest on top Oldest on top	-	-	Latest on top	Sort order of event list
AutoIndicationDRP	Disabled Enabled	-	-	Disabled	Automatic indication of disturbance report
SubstIndSLD	No Yes	-	-	No	Substitute indication on single line diagram
InterlockIndSLD	No Yes	-	-	No	Interlock indication on single line diagram
BypassCommands	No Yes	-	-	No	Enable bypass of commands

5.2 Local HMI signals

5.2.1 Identification

Function description	IEC 61850 identification	IEC 60617 identification	ANSI/IEEE C37.2 device number
Local HMI signals	LHMICTRL	-	-

5.2.2 Function block

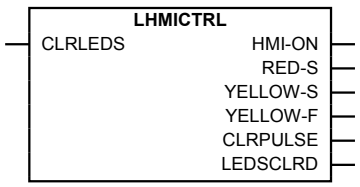

Figure 3: LHMICTRL function block

5.2.3 Signals

Table 11: LHMICTRL Input signals

Name	Type	Default	Description
CLRLEDS	BOOLEAN	0	Input to clear the LCD-HMI LEDs

Table 12: LHMICTRL Output signals

Name	Type	Description
HMI-ON	BOOLEAN	Backlight of the LCD display is active
RED-S	BOOLEAN	Red LED on the LCD-HMI is steady
YELLOW-S	BOOLEAN	Yellow LED on the LCD-HMI is steady
YELLOW-F	BOOLEAN	Yellow LED on the LCD-HMI is flashing
CLRPULSE	BOOLEAN	A pulse is provided when the LEDs on the LCD-HMI are cleared
LEDSCLRD	BOOLEAN	Active when the LEDs on the LCD-HMI are not active

5.3 Basic part for LED indication module

5.3.1 Identification

Function description	IEC 61850 identification	IEC 60617 identification	ANSI/IEEE C37.2 device number
Basic part for LED indication module	LEDGEN	-	-
Basic part for LED indication module	GRP1_LED1 - GRP1_LED15 GRP2_LED1 - GRP2_LED15 GRP3_LED1 - GRP3_LED15	-	-

5.3.2 Function block

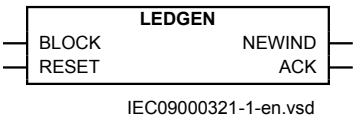

Figure 4: LEDGEN function block

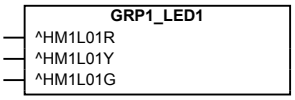

Figure 5: GRP1_LED1 function block

The GRP1_LED1 function block is an example, all 15 LED in each of group 1 - 3 has a similar function block.

5.3.3 Signals

Table 13: LEDGEN Input signals

Name	Type	Default	Description
BLOCK	BOOLEAN	0	Input to block the operation of the LEDs
RESET	BOOLEAN	0	Input to acknowledge/reset the indication LEDs

Table 14: GRP1_LED1 Input signals

Name	Type	Default	Description
HM1L01R	BOOLEAN	0	Red indication of LED1, local HMI alarm group 1
HM1L01Y	BOOLEAN	0	Yellow indication of LED1, local HMI alarm group 1
HM1L01G	BOOLEAN	0	Green indication of LED1, local HMI alarm group 1

Table 15: LEDGEN Output signals

Name	Type	Description
NEWIND	BOOLEAN	New indication signal if any LED indication input is set
ACK	BOOLEAN	A pulse is provided when the LEDs are acknowledged

5.3.4 Settings

Table 16: LEDGEN Non group settings (basic)

Name	Values (Range)	Unit	Step	Default	Description
Operation	Off On	-	-	Off	Operation Off/On
tRestart	0.0 - 100.0	s	0.1	0.0	Defines the disturbance length
tMax	0.0 - 100.0	s	0.1	0.0	Maximum time for the definition of a disturbance

Table 17: GRP1_LED1 Non group settings (basic)

Name	Values (Range)	Unit	Step	Default	Description
SequenceType	Follow-S Follow-F LatchedAck-F-S LatchedAck-S-F LatchedColl-S LatchedReset-S	-	-	Follow-S	Sequence type for LED 1, local HMI alarm group 1
LabelOff	0 - 18	-	1	G1L01_OFF	Label string shown when LED 1, alarm group 1 is off
LabelRed	0 - 18	-	1	G1L01_RED	Label string shown when LED 1, alarm group 1 is red
LabelYellow	0 - 18	-	1	G1L01_YELLOW	Label string shown when LED 1, alarm group 1 is yellow
LabelGreen	0 - 18	-	1	G1L01_GREEN	Label string shown when LED 1, alarm group 1 is green

5.4 LCD part for HMI function keys control module

5.4.1 Identification

Function description	IEC 61850 identification	IEC 60617 identification	ANSI/IEEE C37.2 device number
LCD part for HMI Function Keys Control module	FNKEYMD1 - FNKEYMD5	-	-

5.4.2 Function block

Figure 6: FNKEYMD1 function block

Only the function block for the first button is shown above. There is a similar block for every function button.

5.4.3 Signals

Table 18: FNKEYMD1 Input signals

Name	Type	Default	Description
LEDCTL1	BOOLEAN	0	LED control input for function key

Table 19: FNKEYMD1 Output signals

Name	Type	Description
FKEYOUT1	BOOLEAN	Output controlled by function key

5.4.4 Settings

Table 20: FNKEYMD1 Non group settings (basic)

Name	Values (Range)	Unit	Step	Default	Description
Mode	Off Toggle Pulsed	-	-	Off	Output operation mode
PulseTime	0.001 - 60.000	s	0.001	0.200	Pulse time for output controlled by LCDFn1
LabelOn	0 - 18	-	1	LCD_FN1_ON	Label for LED on state
LabelOff	0 - 18	-	1	LCD_FN1_OFF	Label for LED off state

Table 21: FNKEYTY1 Non group settings (basic)

Name	Values (Range)	Unit	Step	Default	Description
Type	Disabled Menu shortcut Control	-	-	Disabled	Function key type
MenuShortcut	Main menu Events Measurements Diagnostics Disturbance records Clear Single Line Diagram	-	-	Main menu	

5.5 Operation principle

5.5.1 Local HMI

Figure 7: Local human-machine interface

The LHMI of the IED contains the following elements:

- Display (LCD)
- Buttons
- LED indicators
- Communication port

The LHMI is used for setting, monitoring and controlling.

5.5.1.1 Display

The LHMI includes a graphical monochrome display with a resolution of 320 x 240 pixels. The character size can vary.

The display view is divided into four basic areas.

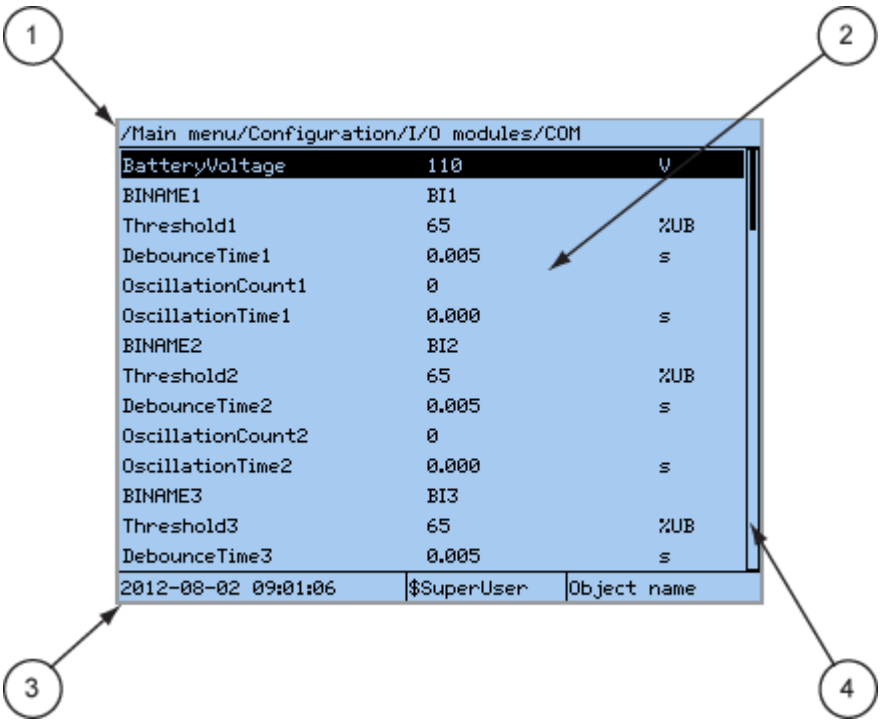

Figure 8: Display layout

1 Path
2 Content
3 Status
4 Scroll bar (appears when needed)

- The path shows the current location in the menu structure. If the path is too long to be shown, it is truncated from the beginning, and the truncation is indicated with three dots.
- The content area shows the menu content.
- The status area shows the current IED time, the user that is currently logged in and the object identification string which is settable via the LHMI or with PCM600.
- If text, pictures or other items do not fit in the display, a vertical scroll bar appears on the right. The text in content area is truncated from the beginning if it does not fit in the display horizontally. Truncation is indicated with three dots.

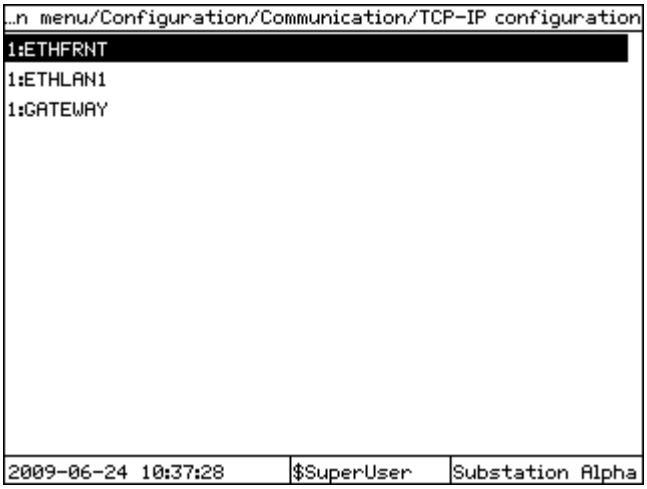

Figure 9: Truncated path

The number before the function instance, for example `1:ETHFRNT`, indicates the instance number.

The function button panel shows on request what actions are possible with the function buttons. Each function button has a LED indication that can be used as a feedback signal for the function button control action. The LED is connected to the required signal with PCM600.

Figure 10: Function button panel

The alarm LED panel shows on request the alarm text labels for the alarm LEDs.

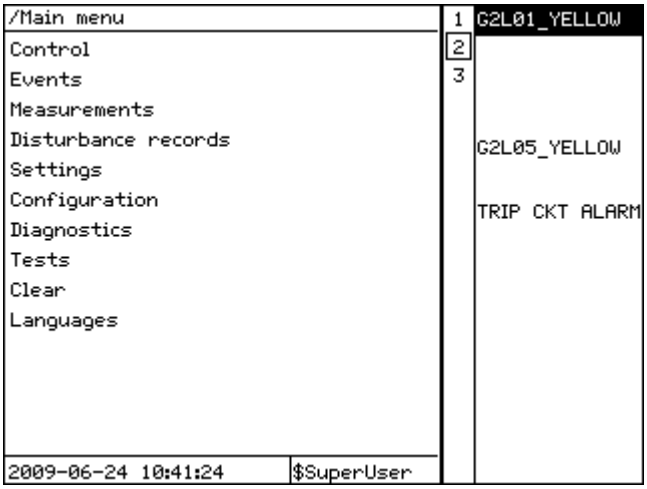

Figure 11: Alarm LED panel

The function button and alarm LED panels are not visible at the same time. Each panel is shown by pressing one of the function buttons or the Multipage button. Pressing the ESC button clears the panel from the display. Both the panels have dynamic width that depends on the label string length that the panel contains.

5.5.1.2 LEDs

The LHMI includes three protection status LEDs above the display: Normal, Pickup and Trip.

There are 15 programmable alarm LEDs on the front of the LHMI. Each LED can indicate three states with the colors: green, yellow and red. The alarm texts related to each three-color LED are divided into three pages.

There are 3 separate pages of LEDs available. The 15 physical three-color LEDs in one LED group can indicate 45 different signals. Altogether, 135 signals can be indicated since there are three LED groups. The LEDs can be configured with PCM600 and the operation mode can be selected with the LHMI or PCM600.

There are two additional LEDs which are embedded into the control buttons Close and Open. They represent the status of the circuit breaker.

5.5.1.3 Keypad

The LHMI keypad contains push-buttons which are used to navigate in different views or menus. The push-buttons are also used to acknowledge alarms, reset indications, provide help and switch between local and remote control mode.

The keypad also contains programmable push-buttons that can be configured either as menu shortcut or control buttons.

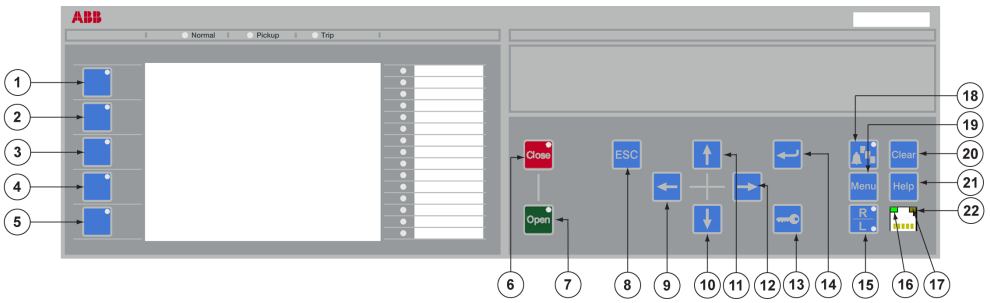

Figure 12: LHMI keypad with object control, navigation and command push buttons and RJ-45 communication port

1...5	Function button
6	Close
7	Open
8	Escape
9	Left
10	Down
11	Up
12	Right
13	Key
14	Enter
15	Remote/Local
16	Uplink LED
17	Not in use
18	Multipage
19	Menu
20	Clear
21	Help
22	Communication port

5.5.2 LED

5.5.2.1 Functionality

The function blocks LEDGEN and GRP1_LEDx, GRP2_LEDx and GRP3_LEDx (x=1-15) controls and supplies information about the status of the indication LEDs. The input and output signals of the function blocks are configured with PCM600. The input signal for each LED is selected individually using SMT or ACT. Each LED is controlled by a GRP1_LEDx function block, that controls the color and the operating mode.

Each indication LED on local HMI can be set individually to operate in 6 different sequences; two as follow type and four as latch type. Two of the latching sequence types are intended to be used as a protection indication system, either in collecting or restarting mode, with reset functionality. The other two are intended to be used as signalling system in collecting mode with acknowledgment functionality.

5.5.2.2 Status LEDs

There are three status LEDs above the LCD in the front of the IED, green, yellow and red.

The green LED has a fixed function, while the yellow and red LEDs are user configured. The yellow LED can be used to indicate that a disturbance report is created (steady) or that the IED is in test mode (flashing). The red LED can be used to indicate a trip command.

5.5.2.3 Indication LEDs

Operating modes

Collecting mode

- LEDs, which are used in collecting mode of operation, are accumulated continuously until the unit is acknowledged manually. This mode is suitable when the LEDs are used as a simplified alarm system.

Re-starting mode

- In the re-starting mode of operation each new start resets all previous active LEDs and activates only those, which appear during one disturbance. Only LEDs defined for re-starting mode with the latched sequence type 6 (LatchedReset-S) will initiate a reset and a restart at a new disturbance. A disturbance is defined to end a settable time after the reset of the activated input signals or when the maximum time limit has elapsed.

Acknowledgment/reset

- From local HMI
  - The active indications can be acknowledged/reset manually. Manual acknowledgment and manual reset have the same meaning and is a common signal for all the operating sequences and LEDs. The function is positive edge triggered, not level triggered. The acknowledgment/reset is performed via the

button and menus on the LHMI.

- From function input
  - The active indications can also be acknowledged/reset from an input, ACK_RST, to the function. This input can for example be configured to a binary input operated from an external push button. The function is positive edge triggered, not level triggered. This means that even if the button is continuously pressed, the acknowledgment/reset only affects indications active at the moment when the button is first pressed.

- Automatic reset
  - The automatic reset can only be performed for indications defined for re-starting mode with the latched sequence type 6 (LatchedReset-S). When the automatic reset of the LEDs has been performed, still persisting indications will be indicated with a steady light.

Operating sequence

The sequences can be of type Follow or Latched. For the Follow type the LED follow the input signal completely. For the Latched type each LED latches to the corresponding input signal until it is reset.

The figures below show the function of available sequences selectable for each LED separately. For sequence 1 and 2 (Follow type), the acknowledgment/reset function is not applicable. Sequence 3 and 4 (Latched type with acknowledgement) are only working in collecting mode. Sequence 5 is working according to Latched type and collecting mode while sequence 6 is working according to Latched type and re-starting mode. The letters S and F in the sequence names have the meaning S = Steady and F = Flash.

At the activation of the input signal, the indication obtains corresponding color corresponding to the activated input and operates according to the selected sequence diagrams below.

In the sequence diagrams the LEDs have the following characteristics:

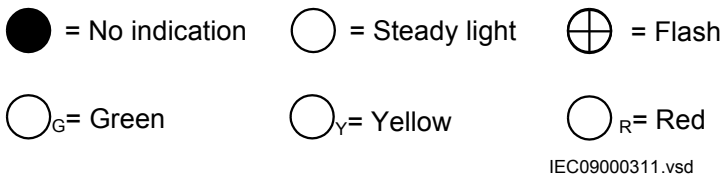

Figure 13: Symbols used in the sequence diagrams

Sequence 1 (Follow-S)

This sequence follows all the time, with a steady light, the corresponding input signals. It does not react on acknowledgment or reset. Every LED is independent of the other LEDs in its operation.

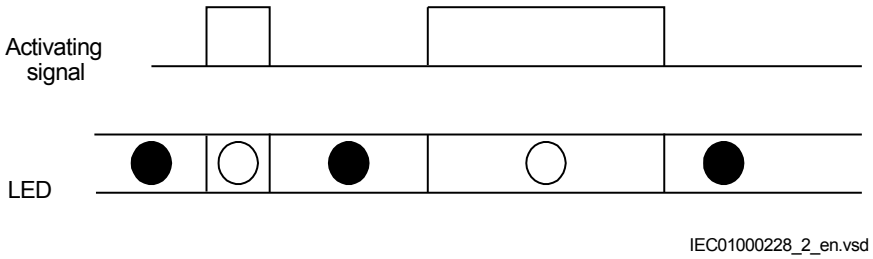

Figure 14: Operating sequence 1 (Follow-S)

If inputs for two or more colors are active at the same time to one LED the priority is as described above. An example of the operation when two colors are activated in parallel is shown in Figure 15.

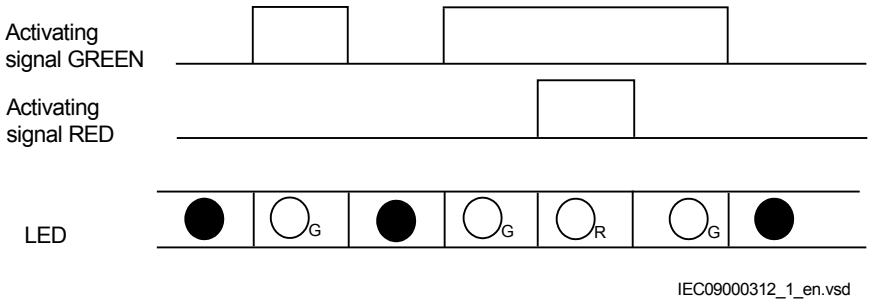

Figure 15: Operating sequence 1, two colors

Sequence 2 (Follow-F)

This sequence is the same as sequence 1, Follow-S, but the LEDs are flashing instead of showing steady light.

Sequence 3 (LatchedAck-F-S)

This sequence has a latched function and works in collecting mode. Every LED is independent of the other LEDs in its operation. At the activation of the input signal, the indication starts flashing. After acknowledgment the indication disappears if the signal is not present any more. If the signal is still present after acknowledgment it gets a steady light.

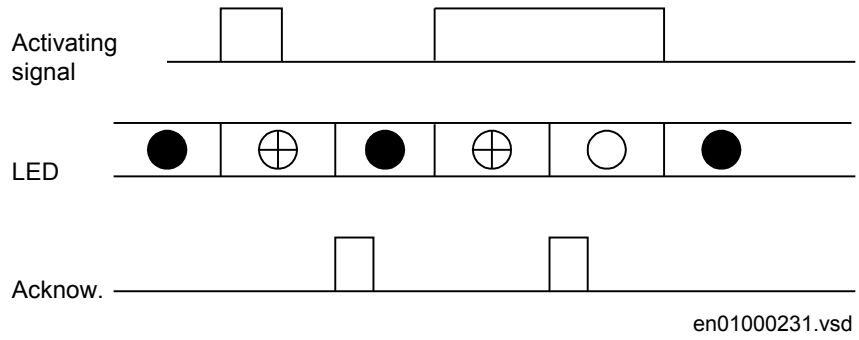

Figure 16: Operating sequence 3 (LatchedAck-F-S)

When an acknowledgment is performed, all indications that appear before the indication with higher priority has been reset, will be acknowledged, independent of if the low priority indication appeared before or after acknowledgment. In Figure 17 it is shown the sequence when a signal of lower priority becomes activated after acknowledgment has been performed on a higher priority signal. The low priority signal will be shown as acknowledged when the high priority signal resets.

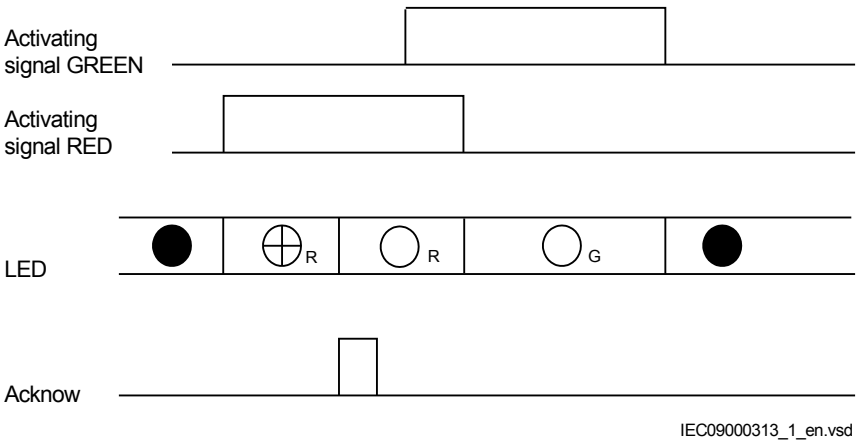

Figure 17: Operating sequence 3, 2 colors involved

If all three signals are activated the order of priority is still maintained. Acknowledgment of indications with higher priority will acknowledge also low priority indications, which are not visible according to Figure 18.

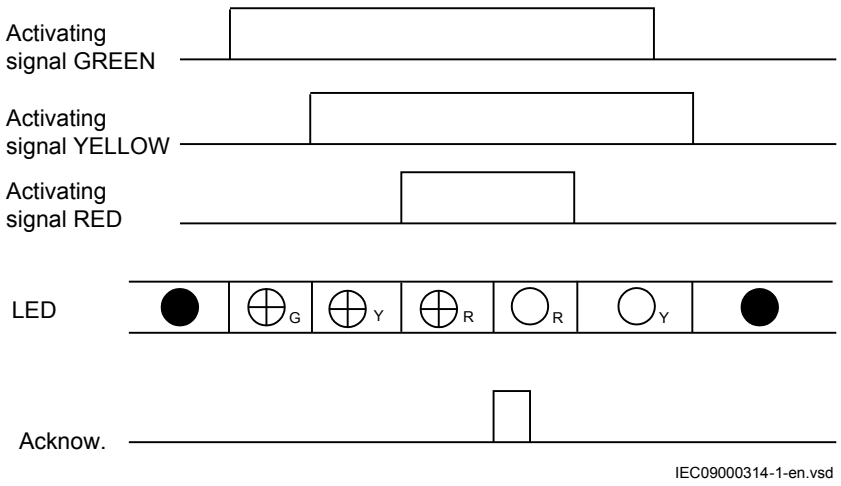

Figure 18: Operating sequence 3, three colors involved, alternative 1

If an indication with higher priority appears after acknowledgment of a lower priority indication the high priority indication will be shown as not acknowledged according to Figure 19.

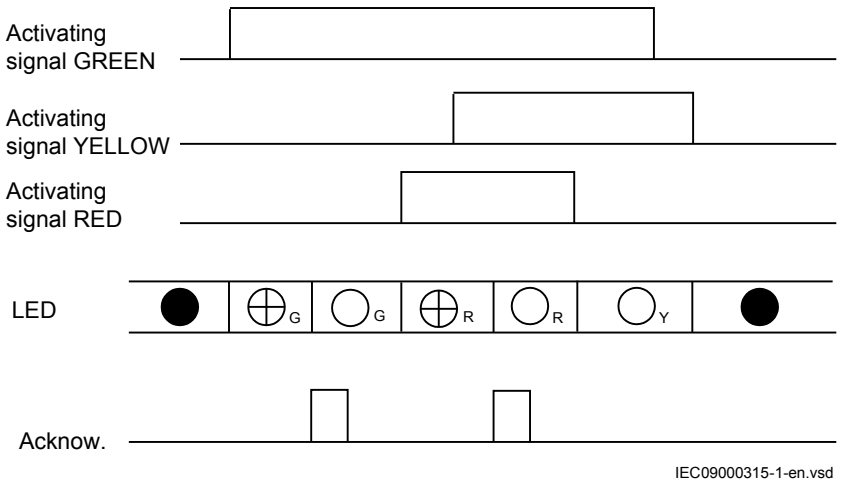

Figure 19: Operating sequence 3, three colors involved, alternative 2

Sequence 4 (LatchedAck-S-F)

This sequence has the same functionality as sequence 3, but steady and flashing light have been alternated.

Sequence 5 (LatchedColl-S)

This sequence has a latched function and works in collecting mode. At the activation of the input signal, the indication will light up with a steady light. The difference to

sequence 3 and 4 is that indications that are still activated will not be affected by the reset that is, immediately after the positive edge of the reset has been executed a new reading and storing of active signals is performed. Every LED is independent of the other LEDs in its operation.

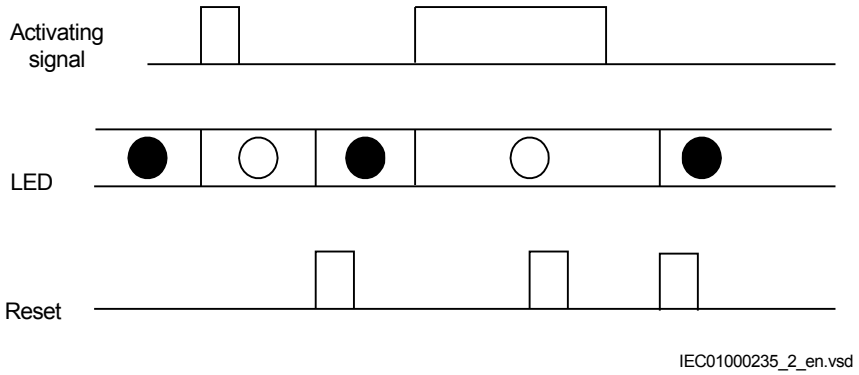

Figure 20: Operating sequence 5 (LatchedColl-S)

That means if an indication with higher priority has reset while an indication with lower priority still is active at the time of reset, the LED will change color according to Figure 21.

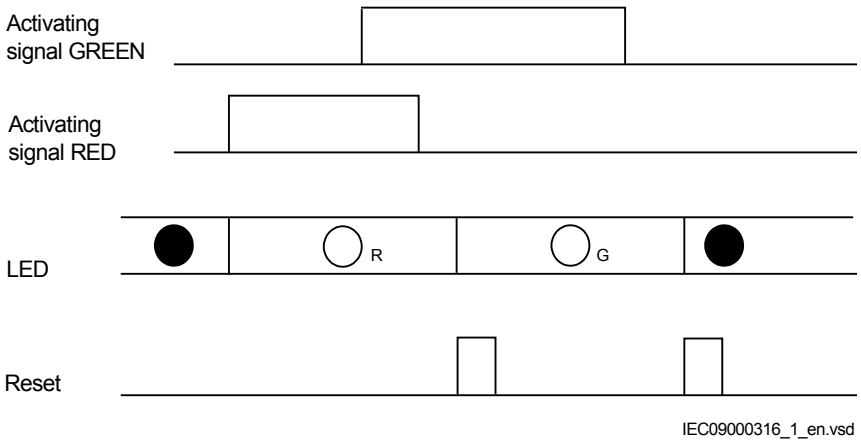

Figure 21: Operating sequence 5, two colors

Sequence 6 (LatchedReset-S)

In this mode all activated LEDs, which are set to sequence 6 (LatchedReset-S), are automatically reset at a new disturbance when activating any input signal for other LEDs set to sequence 6 (LatchedReset-S). Also in this case indications that are still activated will not be affected by manual reset, that is, immediately after the positive edge of that the manual reset has been executed a new reading and storing of active

signals is performed. LEDs set for sequence 6 are completely independent in its operation of LEDs set for other sequences.

Timing diagram for sequence 6

Figure 22 shows the timing diagram for two indications within one disturbance.

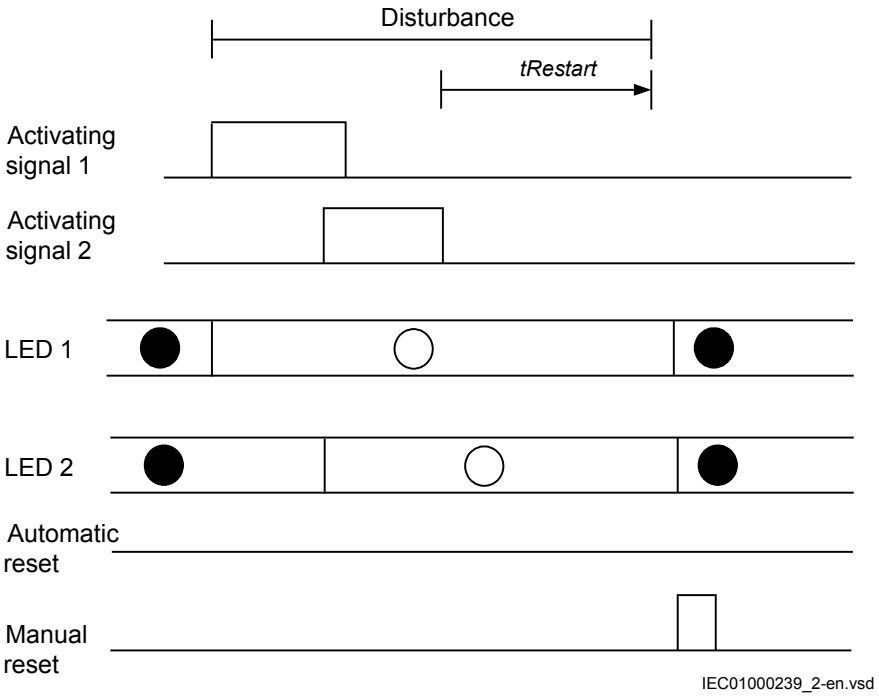

Figure 22: Operating sequence 6 (LatchedReset-S), two indications within same disturbance

Figure 23 shows the timing diagram for a new indication after *tRestart* time has elapsed.

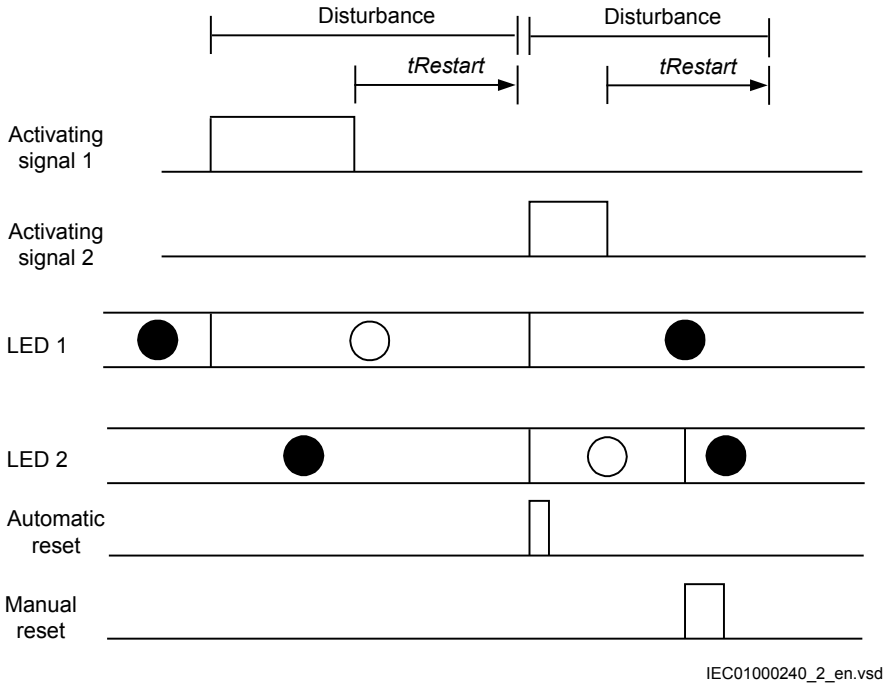

Figure 23: Operating sequence 6 (LatchedReset-S), two different disturbances

Figure 24 shows the timing diagram when a new indication appears after the first one has reset but before *tRestart* has elapsed.

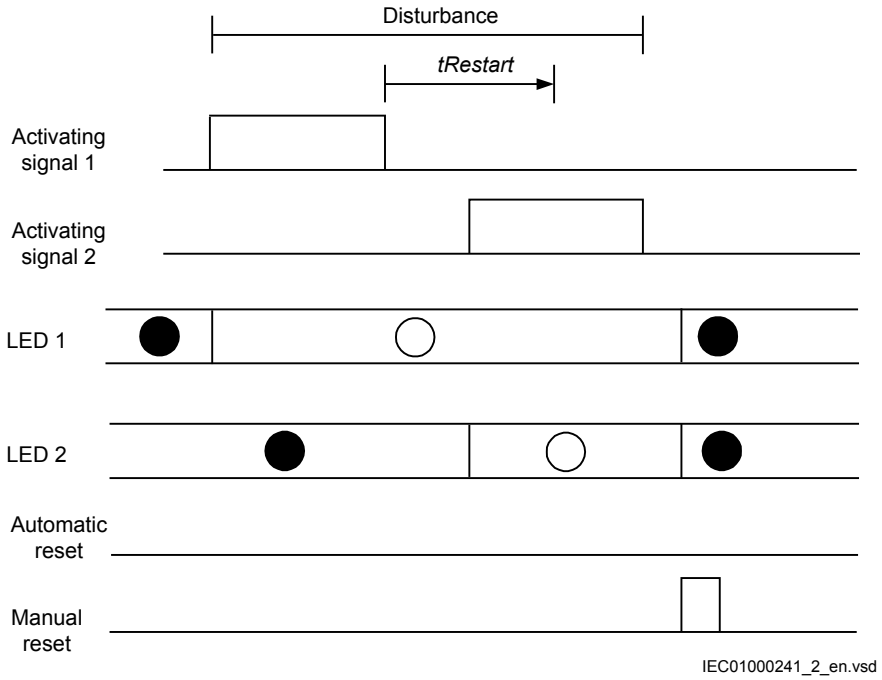

Figure 24: Operating sequence 6 (LatchedReset-S), two indications within same disturbance but with reset of activating signal between

Figure 25 shows the timing diagram for manual reset.

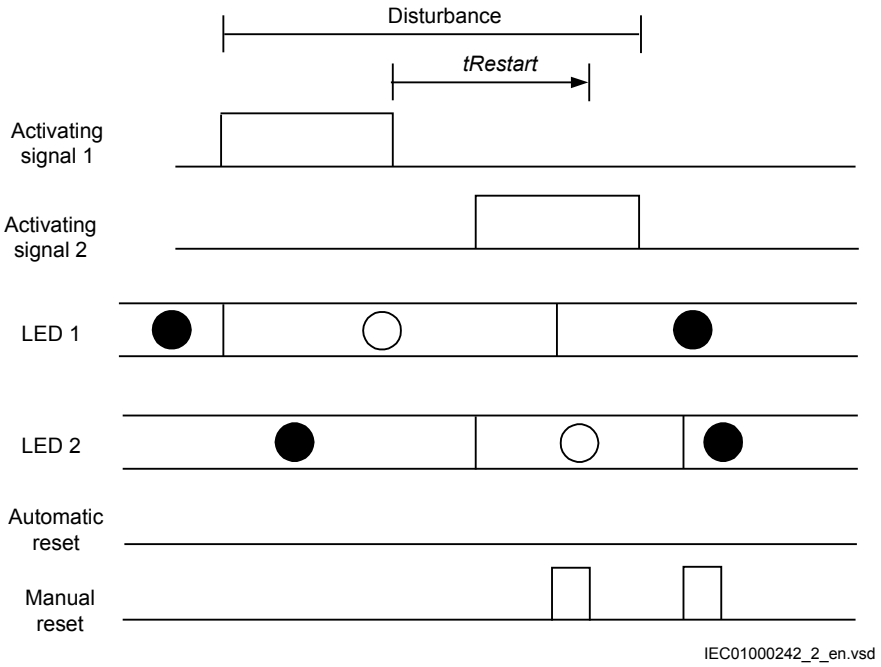

Figure 25: Operating sequence 6 (LatchedReset-S), manual reset

5.5.3 Function keys

5.5.3.1 Functionality

Local Human-Machine-Interface (LHMI) has five function buttons, directly to the left of the LCD, that can be configured either as menu shortcut or control buttons. Each button has an indication LED that can be configured in the application configuration.

When used as a menu shortcut, a function button provides a fast way to navigate between default nodes in the menu tree. When used as a control, the button can control a binary signal.

5.5.3.2 Operation principle

Each output on the FNKEYMD1 - FNKEYMD5 function blocks can be controlled from the LHMI function keys. By pressing a function button on the LHMI, the output status of the actual function block will change. These binary outputs can in turn be used to control other function blocks, for example, switch control blocks, binary I/O outputs etc.

FNKEYMD1 - FNKEYMD5 function block also has a number of settings and parameters that control the behavior of the function block. These settings and parameters are normally set using the PST.

Operating sequence

The operation mode is set individually for each output, either OFF, TOGGLE or PULSED.

Mode 0 (OFF)

This mode always gives the output the value 0 (FALSE). Changes on the IO attribute (changes in the input value does not affect the output value) are ignored.

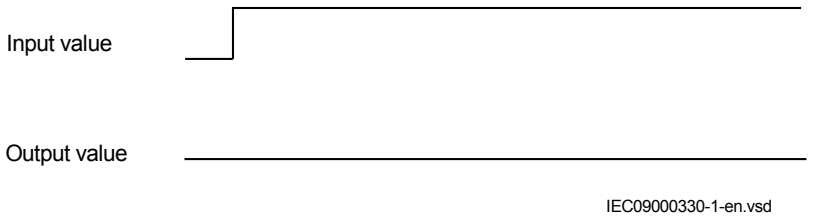

Figure 26: Sequence diagram for Mode 0

Mode 1 (TOGGLE)

In this mode the output toggles each time the function block detects that the input has been written (the input has completed a pulse). Note that the input attribute is reset each time the function block executes. The function block execution is marked with a dotted line below.

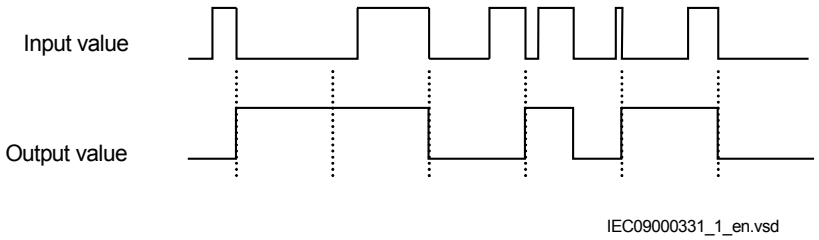

Figure 27: Sequence diagram for Mode 1

Mode 2 (PULSED)

In this mode the output will be high for as long as the setting *pulse time*. After this time the output will go back to 0. The input attribute is reset when the function block detects it being high and there is no output pulse.

Note that the third positive edge on the input attribute does not cause a pulse, since the edge was applied during pulse output. A new pulse can only begin when the output is zero; else the trigger edge is lost.

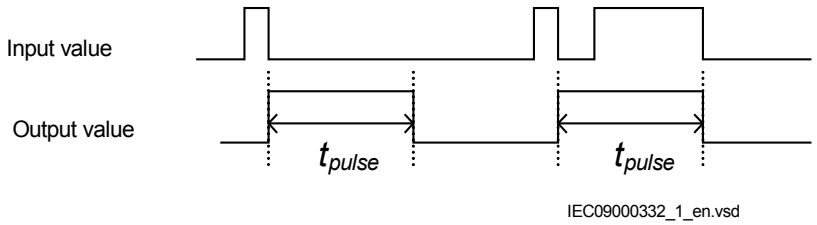

Figure 28: Sequence diagram for Mode 2

Input function

All inputs work the same way: When the LHMI is configured so that a certain function button is of type CONTROL, then the corresponding input on this function block becomes active, and will light the yellow function button LED when high. This functionality is active even if the function block operation setting is set to off.

There is an exception for the optional extension EXT1 function keys 7 and 8, since they are tri-color (they can be red, yellow or green). Each of these LEDs are controlled by three inputs, which are prioritized in the following order: Red - Yellow - Green

INPUT			OUTPUT
RED	YELLOW	GREEN	Function key LED color
1	0/1	0/1	red
-	1	0/1	yellow
-	-	1	green
0	0	0	off

Section 6 Differential protection

6.1 Transformer differential protection

6.1.1 Functionality

The function can be provided with two or three three-phase sets of current inputs. All current inputs are provided with percentage bias restraint features, making the IED suitable for two- or three-winding transformer arrangements.

Two-winding applications

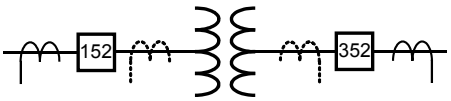

xx05000048_ansi.vsd

Three-winding applications

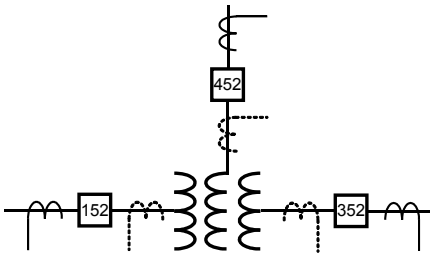

xx05000052_ansi.vsd

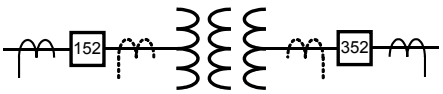

xx05000049_ansi.vsd

Figure 29: CT group arrangement for differential protection and other protections

The available settings of this function allow the RET650 to cover various differential protection applications such as power transformers and auto-transformers with or without load tap changer as well as for shunt reactors including local feeders within the station. An adaptive stabilizing feature is included to avoid misoperations during for heavy through-faults.

Harmonic restraint is included for inrush currents as well as for overexcitation conditions. Adaptive harmonic restraint is also included for system recovery inrush and CT saturation during external faults. A high set unrestrained differential current protection element is included for a very high speed tripping at a high internal fault currents.

An innovative sensitive differential protection feature, based on the theory of symmetrical components, offers the best possible coverage for power transformer winding turn-to-turn faults.

6.1.2 Transformer differential protection, two winding T2WPDIF (87T)

6.1.2.1 Identification

Function description	IEC 61850 identification	IEC 60617 identification	ANSI/IEEE C37.2 device number
Transformer differential protection, two-winding	T2WPDIF	*3Id/I*	87T

6.1.2.2 Function block

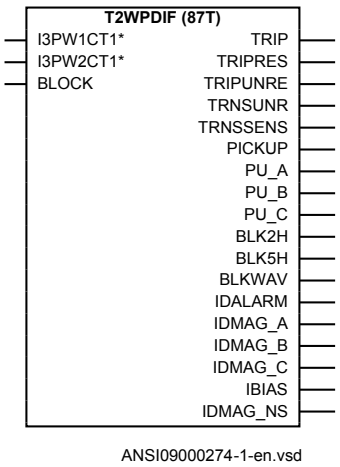

Figure 30: T2WPDIF (87T) function block

6.1.2.3 Signals

Table 22: T2WPDIF (87T) Input signals

Name	Type	Default	Description
I3PW1CT1	GROUP SIGNAL	-	Three phase current connection winding 1 (W1) CT1
I3PW2CT1	GROUP SIGNAL	-	Three phase current connection winding 2 (W2) CT1
BLOCK	BOOLEAN	0	Block of function

Table 23: T2WPDIF (87T) Output signals

Name	Type	Description
TRIP	BOOLEAN	Common trip signal
TRIPRES	BOOLEAN	Trip signal from restrained differential protection
TRIPUNRE	BOOLEAN	Trip signal from unrestrained differential protection
TRNSUNR	BOOLEAN	Trip signal from unrestrained negative sequence differential protection
TRNSSENS	BOOLEAN	Trip signal from sensitive negative sequence differential protection
PICKUP	BOOLEAN	General pickup signal
PU_A	BOOLEAN	Pickup signal from phase A
PU_B	BOOLEAN	Pickup signal from phase B
Table continues on next page		

Name	Type	Description
PU_C	BOOLEAN	Pickup signal from phase C
BLK2H	BOOLEAN	General second harmonic block signal
BLK5H	BOOLEAN	General fifth harmonic block signal
BLKWAV	BOOLEAN	General block signal from waveform criteria
IDALARM	BOOLEAN	General alarm for sustained differential currents
IDMAG_A	REAL	Magnitude of fundamental frequency differential current, phase A
IDMAG_B	REAL	Magnitude of fundamental frequency differential current, phase B
IDMAG_C	REAL	Magnitude of fundamental frequency differential current, phase C
IBIAS	REAL	Magnitude of the bias current, which is common to all phases
IDMAG_NS	REAL	Magnitude of the negative sequence differential current

6.1.2.4 Settings

Table 24: T2WPDIF (87T) Group settings (basic)

Name	Values (Range)	Unit	Step	Default	Description
Operation	Disabled Enabled	-	-	Disabled	Operation Disable / Enable
IdMin	0.10 - 0.60	IB	0.01	0.30	Section 1 sensitivity current, usually W1 current
EndSection1	0.20 - 1.50	IB	0.01	1.25	End of section 1, multiple of W1 rated current
EndSection2	1.00 - 10.00	IB	0.01	3.00	End of section 2, multiple of W1 rated current
SlopeSection2	10.0 - 50.0	%	0.1	40.0	Slope in section 2 of operate-restrain characteristics
SlopeSection3	30.0 - 100.0	%	0.1	80.0	Slope in section 3 of operate-restrain characteristics
IdUnre	1.00 - 50.00	IB	0.01	10.00	Unrestrained protection limit, multiple of W1 rated current
I2/I1Ratio	5.0 - 100.0	%	0.1	15.0	Maximum ratio of 2nd harmonic to fundamental harmonic differential current
I5/I1Ratio	5.0 - 100.0	%	0.1	25.0	Maximum ratio of 5th harmonic to fundamental harmonic differential current
CrossBlockEn	Disabled Enabled	-	-	Enabled	Operation Off/On for cross-block logic between phases
NegSeqDiffEn	Disabled Enabled	-	-	Enabled	Operation Off/On for negative sequence differential protections
IMinNegSeq	0.02 - 0.20	IB	0.01	0.04	Minimum negative sequence current

Table continues on next page

Name	Values (Range)	Unit	Step	Default	Description
NegSeqROA	30.0 - 90.0	Deg	0.1	60.0	Operate angle for internal/external negative sequence fault discriminator
SOTFMode	Disabled Enabled	-	-	Enabled	Operation mode for switch onto fault
IDiffAlarm	0.05 - 1.00	IB	0.01	0.20	Differential curreent alarm, multiple of base current, usually W1 current
tAlarmDelay	0.000 - 60.000	s	0.001	10.000	Time delay for differential current alarm

Table 25: T2WPDIF (87T) Non group settings (basic)

Name	Values (Range)	Unit	Step	Default	Description
GlobalBaseSelW1	1 - 6	-	1	1	Selection of one of the Global Base Value groups, winding 1
GlobalBaseSelW2	1 - 6	-	1	1	Selection of one of the Global Base Value groups, winding 2
ConnectTypeW1	WYE (Y) Delta (D)	-	-	WYE (Y)	Connection type of winding 1: Y-wye or D-delta
ConnectTypeW2	WYE (Y) Delta (D)	-	-	WYE (Y)	Connection type of winding 2: Y-wye or D-delta
ClockNumberW2	0 [0 deg] 1 [30 deg lag] 2 [60 deg lag] 3 [90 deg lag] 4 [120 deg lag] 5 [150 deg lag] 6 [180 deg] 7 [150 deg lead] 8 [120 deg lead] 9 [90 deg lead] 10 [60 deg lead] 11 [30 deg lead]	-	-	0 [0 deg]	Phase displacement between W2 & W1=HV winding, hour notation
ZSCurrSubtrW1	Disabled Enabled	-	-	Enabled	Enable zero sequence subtration for W1 side, Off/On
ZSCurrSubtrW2	Disabled Enabled	-	-	Enabled	Enable zero sequence subtration for W2 side, Off/On

6.1.2.5 Monitored data

Table 26: T2WPDIF (87T) Monitored data

Name	Type	Values (Range)	Unit	Description
IDMAG_A	REAL	-	A	Magnitude of fundamental frequency differential current, phase A
IDMAG_B	REAL	-	A	Magnitude of fundamental frequency differential current, phase B
IDMAG_C	REAL	-	A	Magnitude of fundamental frequency differential current, phase C
IBIAS	REAL	-	A	Magnitude of the bias current, which is common to all phases
IDMAG_NS	REAL	-	A	Magnitude of the negative sequence differential current

6.1.3 Transformer differential protection, three winding T3WPDIF (87T)

6.1.3.1 Identification

Function description	IEC 61850 identification	IEC 60617 identification	ANSI/IEEE C37.2 device number
Transformer differential protection, three-winding	T3WPDIF	*3Id/I*	87T

6.1.3.2 Function block

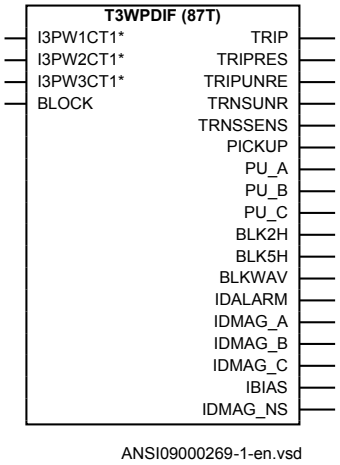

Figure 31: T3WPDIF (87T) function block

6.1.3.3 Signals

Table 27: T3WPDIF (87T) Input signals

Name	Type	Default	Description
I3PW1CT1	GROUP SIGNAL	-	Three phase current connection winding 1 (W1) CT1
I3PW2CT1	GROUP SIGNAL	-	Three phase current connection winding 2 (W2) CT1
I3PW3CT1	GROUP SIGNAL	-	Three phase current connection winding 3 (W3) CT1
BLOCK	BOOLEAN	0	Block of function

Table 28: T3WPDIF (87T) Output signals

Name	Type	Description
TRIP	BOOLEAN	Common trip signal
TRIPRES	BOOLEAN	Trip signal from restrained differential protection
TRIPUNRE	BOOLEAN	Trip signal from unrestrained differential protection
TRNSUNR	BOOLEAN	Trip signal from unrestrained negative sequence differential protection
TRNSSENS	BOOLEAN	Trip signal from sensitive negative sequence differential protection
PICKUP	BOOLEAN	General pickup signal
PU_A	BOOLEAN	Pickup signal from phase A

Table continues on next page

Name	Type	Description
PU_B	BOOLEAN	Pickup signal from phase B
PU_C	BOOLEAN	Pickup signal from phase C
BLK2H	BOOLEAN	General second harmonic block signal
BLK5H	BOOLEAN	General fifth harmonic block signal
BLKWAV	BOOLEAN	General block signal from waveform criteria
IDALARM	BOOLEAN	General alarm for sustained differential currents
IDMAG_A	REAL	Magnitude of fundamental frequency differential current, phase A
IDMAG_B	REAL	Magnitude of fundamental frequency differential current, phase B
IDMAG_C	REAL	Magnitude of fundamental frequency differential current, phase C
IBIAS	REAL	Magnitude of the bias current, which is common to all phases
IDMAG_NS	REAL	Magnitude of the negative sequence differential current

6.1.3.4 Settings

Table 29: T3WPDIF (87T) Group settings (basic)

Name	Values (Range)	Unit	Step	Default	Description
Operation	Disabled Enabled	-	-	Disabled	Operation Disable / Enable
IdMin	0.10 - 0.60	IB	0.01	0.30	Section 1 sensitivity current, usually W1 current
EndSection1	0.20 - 1.50	IB	0.01	1.25	End of section 1, multiple of W1 rated current
EndSection2	1.00 - 10.00	IB	0.01	3.00	End of section 2, multiple of W1 rated current
SlopeSection2	10.0 - 50.0	%	0.1	40.0	Slope in section 2 of operate-restrain characteristics
SlopeSection3	30.0 - 100.0	%	0.1	80.0	Slope in section 3 of operate-restrain characteristics
IdUnre	1.00 - 50.00	IB	0.01	10.00	Unrestrained protection limit, multiple of W1 rated current
I2/I1Ratio	5.0 - 100.0	%	0.1	15.0	Maximum ratio of 2nd harmonic to fundamental harmonic differential current
I5/I1Ratio	5.0 - 100.0	%	0.1	25.0	Maximum ratio of 5th harmonic to fundamental harmonic differential current
CrossBlockEn	Disabled Enabled	-	-	Enabled	Operation Off/On for cross-block logic between phases
NegSeqDiffEn	Disabled Enabled	-	-	Enabled	Operation Off/On for negative sequence differential function
IMinNegSeq	0.02 - 0.20	IB	0.01	0.04	Minimum negative sequence current

Table continues on next page

Name	Values (Range)	Unit	Step	Default	Description
NegSeqROA	30.0 - 90.0	Deg	0.1	60.0	Operate angle for internal/external negative sequence fault discriminator
SOTFMode	Disabled Enabled	-	-	Enabled	Operation mode for switch onto fault function
IDiffAlarm	0.05 - 1.00	IB	0.01	0.20	Differential current alarm, multiple of base current, usually W1 current
tAlarmDelay	0.000 - 60.000	s	0.001	10.000	Time delay for differential current alarm

Table 30: T3WPDIF (87T) Non group settings (basic)

Name	Values (Range)	Unit	Step	Default	Description
GlobalBaseSelW1	1 - 6	-	1	1	Selection of one of the Global Base Value groups, winding 1
GlobalBaseSelW2	1 - 6	-	1	1	Selection of one of the Global Base Value groups, winding 2
GlobalBaseSelW3	1 - 6	-	1	1	Selection of one of the Global Base Value groups, winding 3
ConnectTypeW1	WYE (Y) Delta (D)	-	-	WYE (Y)	Connection type of winding 1: Y-wye or D-delta
ConnectTypeW2	WYE (Y) Delta (D)	-	-	WYE (Y)	Connection type of winding 2: Y-wye or D-delta
ConnectTypeW3	WYE (Y) Delta (D)	-	-	Delta (D)	Connection type of winding 3: Y-wye or D-delta
ClockNumberW2	0 [0 deg] 1 [30 deg lag] 2 [60 deg lag] 3 [90 deg lag] 4 [120 deg lag] 5 [150 deg lag] 6 [180 deg] 7 [150 deg lead] 8 [120 deg lead] 9 [90 deg lead] 10 [60 deg lead] 11 [30 deg lead]	-	-	0 [0 deg]	Phase displacement between W2 & W1=HV winding, hour notation
ClockNumberW3	0 [0 deg] 1 [30 deg lag] 2 [60 deg lag] 3 [90 deg lag] 4 [120 deg lag] 5 [150 deg lag] 6 [180 deg] 7 [150 deg lead] 8 [120 deg lead] 9 [90 deg lead] 10 [60 deg lead] 11 [30 deg lead]	-	-	5 [150 deg lag]	Phase displacement between W3 & W1=HV winding, hour notation

Table continues on next page

Name	Values (Range)	Unit	Step	Default	Description
ZSCurrSubtrW1	Disabled Enabled	-	-	Enabled	Enable zero sequence subtraction for W1 side, Off/On
ZSCurrSubtrW2	Disabled Enabled	-	-	Enabled	Enable zero sequence subtraction for W2 side, Off/On
ZSCurrSubtrW3	Disabled Enabled	-	-	Enabled	Enable zero sequence subtraction for W3 side, Off/On

6.1.3.5 Monitored data

Table 31: T3WPDIF (87T) Monitored data

Name	Type	Values (Range)	Unit	Description
IDMAG_A	REAL	-	A	Magnitude of fundamental frequency differential current, phase A
IDMAG_B	REAL	-	A	Magnitude of fundamental frequency differential current, phase B
IDMAG_C	REAL	-	A	Magnitude of fundamental frequency differential current, phase C
IBIAS	REAL	-	A	Magnitude of the bias current, which is common to all phases
IDMAG_NS	REAL	-	A	Magnitude of the negative sequence differential current

6.1.4 Operation principle

The task of the power transformer differential protection is to determine whether a fault is within the protected zone, or outside the protected zone. The protected zone is limited by the position of current transformers (see figure 32), and in principle can include more objects than just transformer. If the fault is found to be internal, the faulty power transformer must be quickly disconnected.

The main CTs are normally supposed to be Wye connected and can be grounded in any direction (that is, either "ToObject" or "FromObject"). Internally the IED will always measure the currents on all sides of the power transformer with the same reference direction towards the power transformer windings as shown in figure 32.

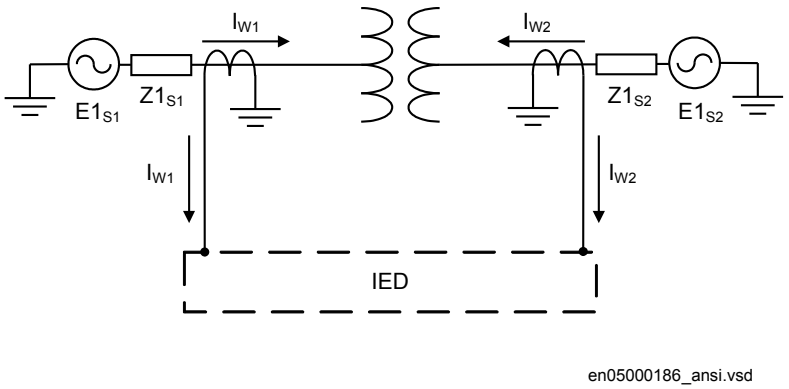

Figure 32: Typical CT location and definition of positive current direction

Due to the ratio of the number of turns of the windings and the connection group of the protected transformer, the current between two windings can not be directly compared to each other. Therefore the differential protection must first correlate all currents to each other before any calculation can be performed.

In numerical differential protections this correlation and comparison is performed mathematically. First, compensation for the protected transformer transformation ratio and connection group is made, and only then the currents are compared phase-wise. This makes external auxiliary (interposing) current transformers unnecessary.

Conversion of all currents to the common reference side of the power transformer is performed by pre-programmed coefficient matrices, which depends on the protected power transformer transformation ratio and connection group. Once the power transformer phase shift, rated currents and voltages have been entered by the user, the differential protection is capable to calculate the matrix coefficients required in order to perform the on-line current comparison by means of a fixed equation.

6.1.4.1 Function calculation principles

To make a differential IED as sensitive and stable as possible, restrained differential characteristic have been developed and are now adopted as the general practice in the protection of power transformers. The protection should be provided with a proportional bias, which makes the protection operate for a certain percentage differential current related to the current through the transformer. This stabilizes the protection under through fault conditions while still permitting the system to have good basic sensitivity. The following chapters explain how these quantities are calculated.

6.1.4.2 Fundamental frequency differential currents

The fundamental frequency differential current is a vectorial sum (sum of fundamental frequency phasors) of the individual phase currents from different side of the protected power transformer.

Before any differential current can be calculated, the power transformer phase shift, and its transformation ratio, must be allowed for. Conversion of all currents to a common reference is performed in two steps:

- all current phasors are phase-shifted to (referred to) the phase-reference side, (whenever possible a first winding with wye connection)
- all currents magnitudes are always referred to the first winding of the power transformer (typically transformer high-voltage side)

The two steps of conversion are made simultaneously on-line by the pre-programmed coefficient matrices, as shown in equation 1 for a two-winding power transformer, and in equation 2 for a three-winding power transformer.

These are internal compensation algorithms within the differential function. The protected power transformer data are always entered as they are given on the nameplate. Differential function will by it self adapt nameplate data and select proper reference windings.

$$\underbrace{\begin{bmatrix} IDA \\ IDB \\ IDC \end{bmatrix}}_{1} = \underbrace{A \cdot \begin{bmatrix} I\_A\_W1 \\ I\_B\_W1 \\ I\_C\_W1 \end{bmatrix}}_{2} + \underbrace{\frac{Vn\_W2}{Vn\_W1} \cdot B \cdot \begin{bmatrix} I\_A\_W2 \\ I\_B\_W2 \\ I\_C\_W2 \end{bmatrix}}_{3}$$

(Equation 1)

where:

1. is the resulting Differential Currents
2. is Differential current contribution from W1 side
3. is Differential current contribution from W2 side

$$\underbrace{\begin{bmatrix} IDA \\ IDB \\ IDC \end{bmatrix}}_{1} = \underbrace{A \cdot \begin{bmatrix} I\_A\_W1 \\ I\_B\_W1 \\ I\_C\_W1 \end{bmatrix}}_{2} + \underbrace{\frac{Vn\_W2}{Vn\_W1} \cdot B \cdot \begin{bmatrix} I\_A\_W2 \\ I\_B\_W2 \\ I\_C\_W2 \end{bmatrix}}_{3} + \underbrace{\frac{Vn\_W3}{Vn\_W1} \cdot C \cdot \begin{bmatrix} IL\_A\_W3 \\ IL\_B\_W3 \\ IL\_C\_W3 \end{bmatrix}}_{4}$$

(Equation 2)

where:

1. is the resulting Differential Currents
2. is Differential current contribution from W1 side
3. is Differential current contribution from W2 side
4. is Differential current contribution from W3 side

and where, for equation 1 and equation 2:

ID_A	is the fundamental frequency differential current in phaseA (in W1 side primary amperes)
ID_B	is the fundamental frequency differential current in phase B (in W1 side primary amperes)
ID_C	is the fundamental frequency differential current in phaseC (in W1 side primary amperes)
I_A_W1	is the fundamental frequency phase current in phaseA on W1 side
I_B_W1	is the fundamental frequency phase current in phaseB on W1 side
I_C_W1	is the fundamental frequency phase current in phaseC on W1 side
I_A_W2	is the fundamental frequency phase current in phaseA on W2 side
I_B_W2	is the fundamental frequency phase current in phase B on W2 side
I_C_W2	is the fundamental frequency phase current in phase C on W2 side
I_A_W3	is the fundamental frequency phase current in phase A on W3 side
I_B_W3	is the fundamental frequency phase current in phaseB on W3 side
I_C_W3	is the fundamental frequency phase current in phaseC on W3 side
Vn_W1	is transformer rated phase-to-phase voltage on W1 side (setting parameter)
Vn_W2	is transformer rated phase-to-phase voltage on W2 side (setting parameter)
Vn_W3	is transformer rated phase-to-phase voltage on W3 side (setting parameter)
A, B and C	are three by three matrices with numerical coefficients

Values of the matrix A, B and C coefficients depend on:

1. Power transformer winding connection type, such as wye (Y/y) or delta (D/d)
   - **Note!** The capitalized letter Y or D is used to represent the high voltage (HV) side of the transformer and the smaller letter y or d to represent lower voltage(LV) level. When neutral bushing of a wye winding is brought out,

the same may be represented as YN or yn depending on whether the winding is HV or LV.

2. Transformer phase shift such as Yd1, Dy11, YNautod5, Yy0d5 and so on, which introduce phase displacement between individual windings currents in multiples of 30°. Since the HV and LV winding voltages are in phase for wye/wye or Delta/Delta transformers, the same is represented in IEC as represented as Dd0, Yy0. Polarity reversal in one of the windings would give 180 degree phase displacement which can be represented by clock position 6. Such transformers can thus be represented as Dd6, Yy6. It is also possible to rename the phases ABC to CAB or BCA, giving 120 or 240 degree displacements, represented by clock positions 4 & 8 . Polarity reversals in one of the windings would provide clock positions 10 & 2. These can all be represented for example: Yy0, Yy2, Yy4, Dd0, Dd6. ANSI wye/Delta or Delta/wye transformers have the HV winding leading the LV winding by 30degrees. This can be represented by Yd1 or Dy1. Again considering polarity reversals and renaming of phases gives rise to other clock positions 4,7,5,11
3. Settings for elimination of zero sequence currents for individual windings.

When the end user enters all these parameters, transformer differential function automatically determines the matrix coefficients based on the following rules:

For the phase reference, the highest voltage wye (Y) connected winding is used. For example, if the power transformer is a Yd1 power transformer, the HV winding (Y) is taken as the phase reference winding. If the power transformer is a Yy0 power transformer the HV winding (Y) is taken as the phase reference winding. If the power transformer is a Dy1, then the LV winding (y) is taken for the phase reference. If there is no wye connected winding, such as in Dd0 type of power transformers, then the HV delta winding (D) is automatically chosen as the phase reference winding.

The fundamental frequency differential currents are in general composed of currents of all sequences, that is, the positive-, the negative-, and the zero-sequence currents. If the zero-sequence currents are eliminated (see section "Elimination of zero sequence currents"), then the differential currents can consist only of the positive-, and the negative-sequence currents. When the zero-sequence current is subtracted on one power transformer side, then it is subtracted from each individual phase current.

Table 32 summarizes the values of the matrices for all standard phase shifts between windings.

Table 32: Matrices for differential current calculation

	Matrix with Zero Sequence Reduction set to On	Matrix with Zero Sequence Reduction set to Off
Matrix for Reference Winding	$\frac{1}{3}\cdot\begin{bmatrix} 2 & -1 & -1 \\ -1 & 2 & -1 \\ -1 & -1 & 2 \end{bmatrix}$ (Equation 3)	$\begin{bmatrix} 1 & 0 & 0 \\ 0 & 1 & 0 \\ 0 & 0 & 1 \end{bmatrix}$ (Equation 4)
Matrix for winding with 30° lagging	$\frac{1}{\sqrt{3}}\cdot\begin{bmatrix} 1 & -1 & 0 \\ 0 & 1 & -1 \\ -1 & 0 & 1 \end{bmatrix}$ (Equation 5)	Not applicable. Matrix on the left used.
Matrix for winding with 60° lagging	$\frac{1}{3}\cdot\begin{bmatrix} 1 & -2 & 1 \\ 1 & 1 & -2 \\ -2 & 1 & 1 \end{bmatrix}$ (Equation 6)	$\begin{bmatrix} 0 & -1 & 0 \\ 0 & 0 & -1 \\ -1 & 0 & 0 \end{bmatrix}$ (Equation 7)
Matrix for winding with 90° lagging	$\frac{1}{\sqrt{3}}\cdot\begin{bmatrix} 0 & -1 & 1 \\ 1 & 0 & -1 \\ -1 & 1 & 0 \end{bmatrix}$ (Equation 8)	Not applicable. Matrix on the left used.
Matrix for winding with 120° lagging	$\frac{1}{3}\cdot\begin{bmatrix} -1 & -1 & 2 \\ 2 & -1 & -1 \\ -1 & 2 & -1 \end{bmatrix}$ (Equation 9)	$\begin{bmatrix} 0 & 0 & 1 \\ 1 & 0 & 0 \\ 0 & 1 & 0 \end{bmatrix}$ (Equation 10)
Matrix for winding with 150° lagging	$\frac{1}{\sqrt{3}}\cdot\begin{bmatrix} -1 & 0 & 1 \\ 1 & -1 & 0 \\ 0 & 1 & -1 \end{bmatrix}$ (Equation 11)	Not applicable. Matrix on the left used.
Matrix for winding which is in opposite phase	$\frac{1}{3}\cdot\begin{bmatrix} -2 & 1 & 1 \\ 1 & -2 & 1 \\ 1 & 1 & -2 \end{bmatrix}$ (Equation 12)	$\begin{bmatrix} -1 & 0 & 0 \\ 0 & -1 & 0 \\ 0 & 0 & -1 \end{bmatrix}$ (Equation 13)
Matrix for winding with 150° leading	$\frac{1}{\sqrt{3}}\cdot\begin{bmatrix} -1 & 1 & 0 \\ 0 & -1 & 1 \\ 1 & 0 & -1 \end{bmatrix}$ (Equation 14)	Not applicable. Matrix on the left used.
Table continues on next page		

	Matrix with Zero Sequence Reduction set to On	Matrix with Zero Sequence Reduction set to Off
Matrix for winding with 120° leading	$\frac{1}{3}\cdot\begin{bmatrix}-1 & 2 & -1\\ -1 & -1 & 2\\ 2 & -1 & -1\end{bmatrix}$ (Equation 15)	$\begin{bmatrix}0 & 1 & 0\\ 0 & 0 & 1\\ 1 & 0 & 0\end{bmatrix}$ (Equation 16)
Matrix for winding with 90° leading	$\frac{1}{\sqrt{3}}\cdot\begin{bmatrix}0 & 1 & -1\\ -1 & 0 & 1\\ 1 & -1 & 0\end{bmatrix}$ (Equation 17)	Not applicable. Matrix on the left used.
Matrix for winding with 60° leading	$\frac{1}{3}\cdot\begin{bmatrix}1 & 1 & -2\\ -2 & 1 & 1\\ 1 & -2 & 1\end{bmatrix}$ (Equation 18)	$\begin{bmatrix}0 & 0 & -1\\ -1 & 0 & 0\\ 0 & -1 & 0\end{bmatrix}$ (Equation 19)
Matrix for winding with 30° leading	$\frac{1}{\sqrt{3}}\cdot\begin{bmatrix}1 & 0 & -1\\ -1 & 1 & 0\\ 0 & -1 & 1\end{bmatrix}$ (Equation 20)	Not applicable. Matrix on the left used.

By using this table we can derive a complete calculation for all common transformer configuration. For example when considering a YNd5 power transformer the following can be concluded:

1. HV wye (Y) connected winding will be used as reference winding and zero sequence currents shall be subtracted on that side
2. LV winding is lagging for 150°

With help of table 32, the following matrix equation can be written for this power transformer:

$$\begin{bmatrix}ID\_A\\ ID\_B\\ ID\_C\end{bmatrix}=\frac{1}{3}\cdot\begin{bmatrix}2 & -1 & -1\\ -1 & 2 & -1\\ -1 & -1 & 2\end{bmatrix}\cdot\begin{bmatrix}I\_A\_W1\\ I\_B\_W1\\ I\_C\_W1\end{bmatrix}+\frac{Vr\_W2}{Vr\_W1}\cdot\frac{1}{\sqrt{3}}\cdot\begin{bmatrix}-1 & 0 & 1\\ 1 & -1 & 0\\ 0 & 1 & -1\end{bmatrix}\cdot\begin{bmatrix}I\_A\_W2\\ I\_B\_W2\\ I\_C\_W2\end{bmatrix}$$

(Equation 21)

where:

ID_A is the fundamental frequency differential current in phase A (in W1 side primary amperes)

ID_B is the fundamental frequency differential current in phase B (in W1 side primary amperes)

Table continues on next page

ID_C	is the fundamental frequency differential current in phase C (in W1 side primary amperes)
I_A_W1	is the fundamental frequency phase current in phase A on W1 side
I_B_W1	is the fundamental frequency phase current in phase B on W1 side
I_C_W1	is the fundamental frequency phase current in phaseC on W1 side
I_A_W2	is the fundamental frequency phase current in phase A on W2 side
I_B_W2	is the fundamental frequency phase current in phase B on W2 side
I_C_W2	is the fundamental frequency phase current in phaseC on W2 side
Vn_W1	is transformer rated phase-to-phase voltage on W1 side (setting parameter)
Vn_W2	is transformer rated phase-to-phase voltage on W2 side (setting parameter)

As marked in equation 1 and equation 2, the first term on the right hand side of the equation, represents the total contribution from the individual phase currents from W1 side to the fundamental frequency differential currents compensated for eventual power transformer phase shift. The second term on the right hand side of the equation, represents the total contribution from the individual phase currents from W2 side to the fundamental frequency differential currents compensated for eventual power transformer phase shift and transferred to the power transformer reference side. The third term on the right hand side of the equation, represents the total contribution from the individual phase currents from W3 side to the fundamental frequency differential currents compensated for eventual power transformer phase shift and transferred to the power transformer reference side. .

The fundamental frequency differential currents are the magnitudes which are applied in a phase segregated manner to the operate - restrain characteristic of the differential protection. The magnitudes of the differential currents can be read as service values from the function and they are available as outputs IDMAG_A, IDMAG_B, IDMAG_C from the differential protection function block. Thus they can be connected to the disturbance recorder and automatically recorded during any external or internal fault condition.

6.1.4.3 Differential current alarm

Fundamental frequency differential current level is monitored all the time within the differential function. As soon as all three fundamental frequency differential currents are set above the set alarm level (*IDiffAlarm*), a threshold defined by setting parameter *IDiffAlarm* a delay on pickup timer is started. When the pre-set time, defined by setting parameter *tAlarmDelay*, has expired the differential current alarm is generated and output signal IDALARM is set to logical value one.

6.1.4.4 Bias current

The bias current is calculated as the highest current amongst all individual winding current contributions, compensated for eventual power transformer phase shift and transferred to the power transformer reference side. All individual winding current contributions are already referred to the power transformer winding one side (power transformer HV winding) and therefore they can be compared regarding their magnitudes. There are six (or nine in case of three-winding transformer) contributions to the total fundamental differential currents, which are the candidates for the common bias current. The highest individual current contribution is taken as a common bias (restrain) current for all three phases. This "maximum principle" makes the differential protection more secure, with less risk to operate for external faults and in the same time brings more meaning to the breakpoint settings of the operate - restrain characteristic.

The magnitudes of the common bias (restrain) current expressed in the reference side amperes can be read as service values from the function. At the same time it is available as outputs IBIAS from the differential protection function block. Thus, it can be connected to the disturbance recorder and automatically recorded during any external or internal fault condition.

6.1.4.5 Elimination of zero sequence currents

The zero sequence currents can be eliminated from the differential bias current on a per winding basis via a parameter.

Elimination of the zero sequence current component is necessary whenever:

- the protected power transformer cannot transform the zero sequence currents to the other side, for any reason.
- the zero sequence currents can only flow on one side of the protected power transformer.

In most cases, power transformers do not properly transform the zero sequence current to the other side. A typical example is a power transformer of the wye-delta type, for example YNd1. Transformers of this type do not transform the zero sequence quantities, but zero sequence currents can flow in the grounded wye connected winding. In such cases, an external ground-fault on the wye-side causes the zero sequence currents to flow on the wye-side of the power transformer, but not on the delta side. This results in false differential currents - consisting exclusively of the zero sequence currents. If high enough, these false differential currents can cause an unwanted disconnection of the healthy power transformer. They must therefore be subtracted from the fundamental frequency differential currents if an unwanted trip is to be avoided.

For delta windings this feature shall be enabled only if an grounding transformer exist within differential zone on the delta side of the protected power transformer.

Removing the zero sequence current from the differential currents decreases to some extent sensitivity of the differential protection for internal ground-faults. In order to counteract this effect to some degree, the zero sequence currents are subtracted not only from the three fundamental frequency differential currents, but automatically from the bias current as well.

6.1.4.6 Restrained and unrestrained limits of the differential protection

Power transformer differential protection function uses two limits, to which actual magnitudes of the three fundamental frequency differential currents are compared at each execution of the function.

The unrestrained (that is, non-stabilized, "instantaneous") part of the differential protection is used for very high differential currents, where it should be beyond any doubt, that the fault is internal. This settable limit is constant (that is, not proportional to the bias current). Neither harmonic, nor any other restrain is applied to this limit, which is therefore capable to trip power transformer instantaneously.

The restrained (that is, stabilized) part of the differential protection compares the calculated fundamental differential (that is, operating) currents, and the bias (that is, restrain) current, by applying them to the operate - restrain characteristic. The operate - restrain characteristic is represented by a double-slope, double-breakpoint diagram, where the operating current is set against the bias current, as shown in figure 33 The characteristic is determined by the following 5 settings:

1. *IdMin* (Sensitivity in section 1, multiple of trans. Reference side rated current set under the parameter *IBase in GlobalbaseSelW1*)
2. *EndSection1* (End of section 1, as multiple of transformer reference side rated current set under the parameter *IBase in GlobalbaseSelW1*)
3. *EndSection2* (End of section 2, as multiple of transformer reference side rated current set under the parameter *IBase in GlobalbaseSelW1*)
4. *SlopeSection2* (Slope in section 2, as multiple of transformer reference side rated current set under the parameter *IBase in GlobalbaseSelW1*)
5. *SlopeSection3* (Slope in section 2, as multiple of transformer reference side rated current set under the parameter *IBase in GlobalbaseSelW1*)

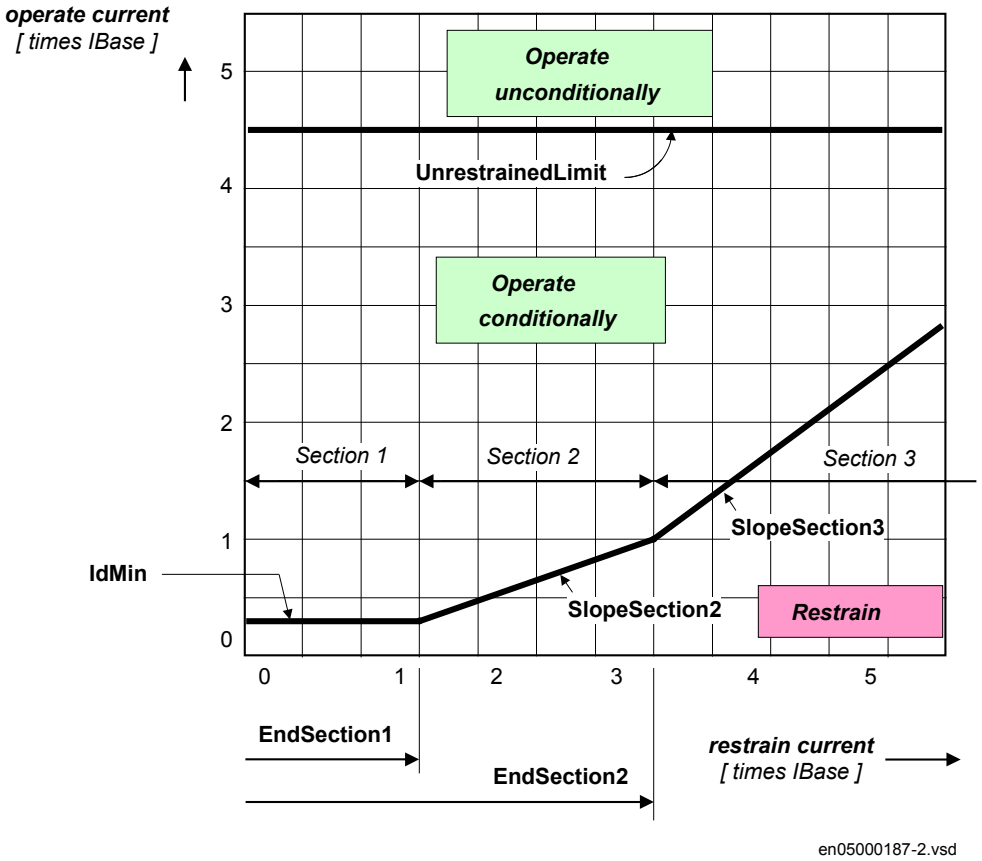

Figure 33: Description of the restrained, and the unrestrained operate characteristics

where:

$$slope = \frac{\Delta Ioperate}{\Delta Irestrain} \cdot 100\%$$

The operate - restrain characteristic is tailor-made and can be designed freely by the user after his needs. The default characteristic is recommended to be used. It gives good results in a majority of applications. The reset ratio is in all parts of the characteristic is equal to 0.95.

Section 1: This is the most sensitive part on the characteristic. In section 1, normal currents flow through the protected object and its current transformers, and risk for higher false differential currents is relatively low. Un-compensated on-load tap-

changer is a typical reason for existence of the false differential currents in this section. Slope in section 1 is always zero percent.

Section 2: In section 2, a certain minor slope is introduced which is supposed to cope with false differential currents due to higher than normal currents through the current transformers, such as during a transformer overloading situation.

Section 3: The more pronounced slope in section 3 is designed to result in a higher tolerance to substantial current transformer saturation at high through-fault currents, which may be expected in this section.

The operate - restrain characteristic should be designed so that it can be expected that:

- for internal faults, the operate (differential) currents are always safely, that is, with a good margin, above the operate - restrain characteristic
- for external faults, the false (spurious) operate currents are safely, that is, with a good margin, below the operate - restrain characteristic

6.1.4.7 Fundamental frequency negative sequence differential currents

Existence of relatively high negative sequence currents is in itself a proof of a disturbance on the power system, possibly a fault in the protected power transformer. The negative-sequence currents are measurable indications of abnormal conditions, similar to the zero sequence currents. One of the several advantages of the negative sequence currents compared to the zero sequence currents is however that they provide coverage for phase-to-phase and power transformer turn-to-turn faults as well, not only for ground-faults. Theoretically the negative sequence currents do not exist during symmetrical three-phase faults, however they do appear during initial stage of such faults (due to the DC offset) for long enough time (in most cases) for the IED to make proper decision. Further, the negative sequence currents are not stopped at a power transformer of the Yd, or Dy connection type. The negative sequence currents are always properly transformed to the other side of any power transformer for any external disturbance. Finally, the negative sequence currents are not affected by symmetrical through-load currents.

For power transformer differential protection application, the negative sequence based differential currents are calculated by using exactly the same matrix equations, which are used to calculate the traditional phase-wise fundamental frequency differential currents. However, the same equation shall be fed by the negative sequence currents from the two power transformer sides instead of individual phase currents, as shown in matrix equation 23 for a case of two-winding, YNd5 power transformer.

$$\underbrace{\begin{bmatrix} IDNS\_A \\ IDNS\_B \\ IDNS\_C \end{bmatrix}}_{1} = \underbrace{\frac{1}{3} \cdot \begin{bmatrix} 2 & -1 & -1 \\ -1 & 2 & -1 \\ -1 & -1 & 2 \end{bmatrix} \cdot \begin{bmatrix} INS\_W1 \\ a \cdot INS\_W1 \\ a^2 \cdot INS\_W1 \end{bmatrix}}_{2} + \underbrace{\frac{Vn\_W2}{Vn\_W1} \cdot \frac{1}{\sqrt{3}} \cdot \begin{bmatrix} -1 & 0 & 1 \\ 1 & -1 & 0 \\ 0 & 1 & -1 \end{bmatrix} \cdot \begin{bmatrix} INS\_W2 \\ a \cdot INS\_W2 \\ a^2 \cdot INS\_W2 \end{bmatrix}}_{3}$$

(Equation 23)

where:

1. is Negative Sequence Differential Current per phase
2. is Negative Sequence current contribution from W1 side
3. is Negative Sequence current contribution from W2 side

and where:

IDNS_A	is the negative sequence differential current in phase A (in W1 side primary amperes)
IDNS_B	is the negative sequence differential current in phase B (in W1 side primary amperes)
IDNS_C	is the negative sequence differential current in phase C (in W1 side primary amperes)
INS_W1	is negative sequence current on W1 side in primary amperes (phase A reference)
INS_W2	is negative sequence current on W1 side in primary amperes (phase A reference)
Vn_W1	is transformer rated phase-to-phase voltage on W1 side (setting parameter)
Vn_W2	is transformer rated phase-to-phase voltage on W2 side (setting parameter)
a	is the complex operator for sequence quantities, for example,

$$a = e^{j \cdot 120^\circ} = -\frac{1}{2} + j \cdot \frac{\sqrt{3}}{2}$$

(Equation 24)

Because the negative sequence currents always form the symmetrical three phase system (negative sequence currents in every phase will always have the same magnitude and a 120 degrees phase rotation compared to each other), it is only necessary to calculate the first negative sequence differential current that is, IDNS_A. This value is then reported as IDNSMAG.

As marked in equation 23, the first term on the right hand side of the equation, represents the total contribution of the negative sequence current from W1 side compensated for eventual power transformer phase shift. The second term on the right hand side of the equation, represents the total contribution of the negative sequence current from W2 side compensated for eventual power transformer phase shift and transferred to the power transformer W1 side. These negative sequence current contributions are phasors, which are further used in directional comparisons, made in order to characterize a fault as internal or external. See section "Internal/external fault discriminator" for more information.

The magnitudes of the negative sequence differential current (IDNSMAG) can be read as service values from the function. In the same time it is available as outputs from the differential protection function block. Thus, it can be connected to the disturbance recorder and automatically recorded during any external or internal fault condition.

6.1.4.8 Internal/external fault discriminator

The internal/external fault discriminator is a very powerful and reliable supplementary criterion to the traditional differential protection. It is recommended that this feature shall be always used (that is, *enabled*) when protecting three-phase power transformers. The internal/external fault discriminator detects even minor faults, with a high sensitivity and at high speed, and at the same time discriminates with a high degree of dependability between internal and external faults.

The algorithm of the internal/external fault discriminator is based on the theory of symmetrical components. Already in 1933, Wagner and Evans in their famous book "Symmetrical Components" have stated that:

1. Source of the negative-sequence currents is at the point of fault,

$$E_{NS} = -I_{NS} \cdot Z_{NS}$$

(Equation 25)

2. Negative-sequence currents distribute through the negative-sequence network
3. Negative-sequence currents obey the first Kirchhoff"s law

The internal/external fault discriminator responds to magnitudes and the relative phase angles of the negative-sequence fault currents at different windings (that is, sides) of the protected power transformer. The negative sequence fault currents must of course first be referred to the same phase reference side, and put to the same magnitude reference. This is done by the matrix expression (see equation 23).

Operation of the internal/external fault discriminator is based on the relative position of the two phasors representing winding one (W1) and winding two (W2) negative

sequence current contributions, respectively, defined by expression shown in equation 23. It performs a directional comparison between these two phasors. Taking into account the phase rotation transformation the relative phase displacement between the two negative sequence current phasors is calculated. In case of three-winding power transformers, a little more complex algorithm is applied, with two directional tests. The overall directional characteristic of the internal/external fault discriminator is shown in figure 34, where the directional characteristic is defined by two setting parameters:

1. *IMinNegSeq*
2. *NegSeqROA*

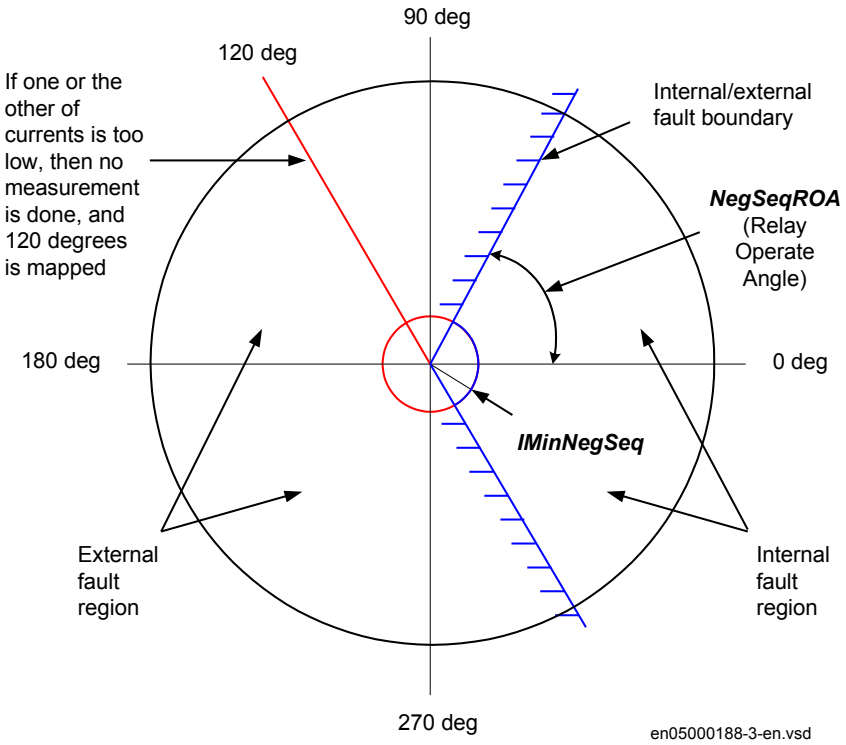

Figure 34: Operating characteristic of the internal/external fault discriminator

In order to perform directional comparison of the two phasors their magnitudes must be high enough so that one can be sure that they are due to a fault. On the other hand, in order to guarantee a good sensitivity of the internal/external fault discriminator, the value of this minimum limit must not be too high. Note that, in order to enhance stability at higher fault currents, the relatively very low threshold value *IminNegSeq* is dynamically increased at currents higher than normal currents: if the bias current is higher than 110% of *IBase* current, then 10% of the bias current is added to the *IminNegSeq*. Only if magnitudes of both negative sequence current contributions are

above the limit, the phase angle between these two phasors is checked. If any of the negative sequence current contributions are too small (less than the set value for *IminNegSeq*), no directional comparison is made in order to avoid the possibility to produce a wrong decision. The setting *NegSeqROA* represents the Relay Operate Angle, which determines the boundary between the internal and external fault regions. It can be selected in the range from ±30 degrees to ±90 degrees, with a step of 0.1 degree. The default value is ±60 degrees. The default setting ±60 degree favours somewhat security in comparison to dependability.

If the above condition concerning magnitudes is fulfilled, the internal/external fault discriminator compares the relative phase angle between the negative sequence current contributions from the W1 and W2 sides of the power transformer using the following two rules:

- If the negative sequence currents contributions from W1 and W2 sides are in phase, the fault is internal
- If the negative sequence currents contributions from W1 and W2 sides are 180 degrees out of phase, the fault is external

For example, for any unsymmetrical external fault, ideally the respective negative sequence current contributions from the W1 and W2 power transformer sides will be exactly 180 degrees apart and equal in magnitude. One such example is shown in figure 35, which shows trajectories of the two separate phasors representing the negative sequence current contributions from HV and LV sides of an Yd5 power transformer (for example, after the compensation of the transformer turns ratio and phase displacement for an unsymmetrical external fault. Observe that the relative phase angle between these two phasors is 180 electrical degrees at any point in time. No current transformer saturation was assumed for this case.

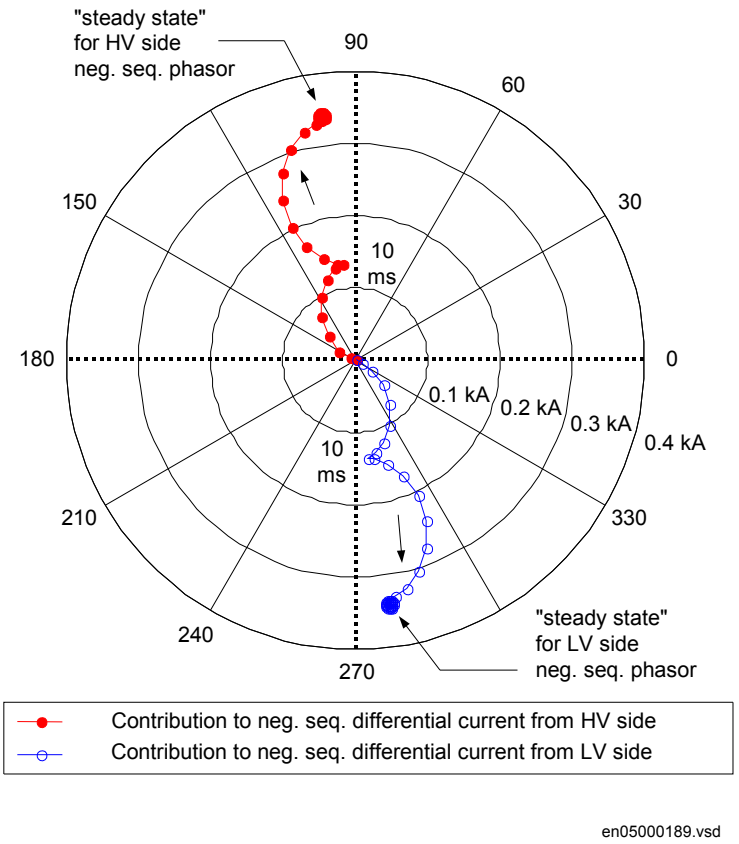

Figure 35: Trajectories of Negative Sequence Current Contributions from HV and LV sides of Yd5 power transformer during external fault

Therefore, under all external fault condition, the relative angle between the phasors is theoretically equal to 180 degrees. During internal fault, the angle shall ideally be 0 degrees, but due to possible different negative sequence source impedance angles on W1 and W2 sides of the protected power transformer, it may differ somewhat from the ideal zero value. However, during heavy faults, CT saturation might cause the measured phase angle to differ from 180 degrees for external, and from about 0 degrees for internal fault. See figure 36 for an example of a heavy internal fault with transient CT saturation.

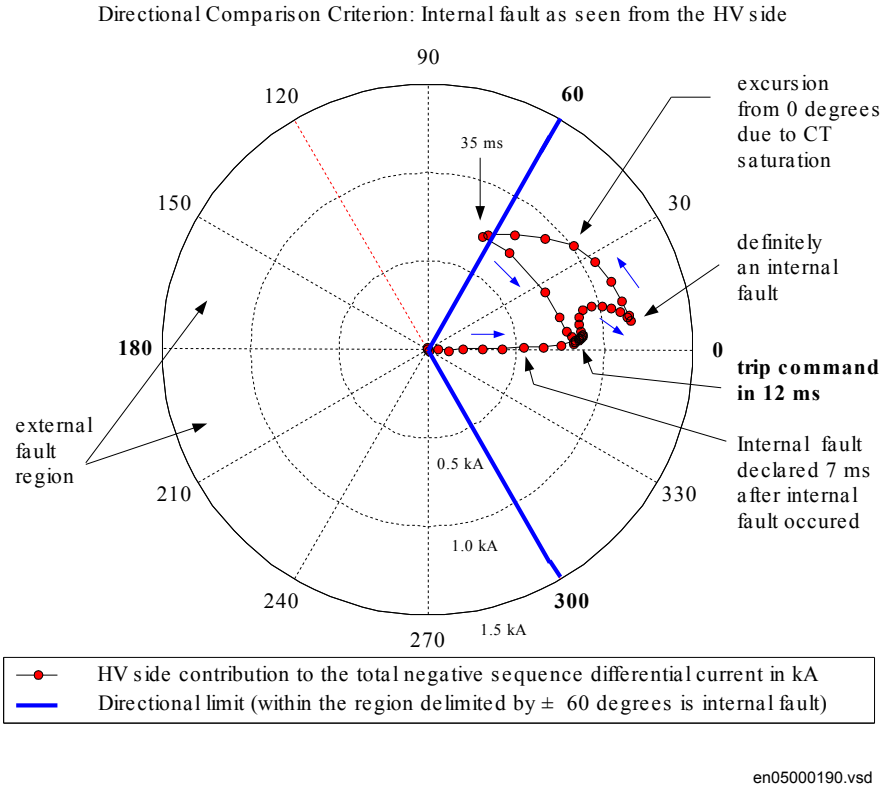

Figure 36: Operation of the internal/external fault discriminator for internal fault with CT saturation

However, it shall be noted that additional security measures are implemented in the internal/external fault discriminator algorithm in order to guarantee proper operation with heavily saturated current transformers. The trustworthy information on whether a fault is internal or external is typically obtained in about 10ms after the fault inception, depending on the setting *IminNegSeq*, and the magnitudes of the fault currents. During heavy faults, approximately 5ms time to full saturation of the main CT is sufficient in order to produce a correct discrimination between internal and external faults.

6.1.4.9 Unrestrained, and sensitive negative sequence protections

Two sub functions are based on the internal/external fault discriminator and have the ability to trip a faulty power transformer, are parts to the traditional power transformer differential protection.

The unrestrained negative sequence differential protection

The unrestrained negative sequence protection is activated if one or more pickup signals have been set by the traditional differential protection algorithm. This happens because one or more of the fundamental frequency differential currents entered the

operate region on the operate - restrain characteristic. So, this protection is not independent of the traditional restrained differential protection - it is activated after the first start signal has been placed.

If the fault is positively recognized as internal, then the unrestrained negative sequence differential protection places its own trip request.

If the bias current is higher than 110% of *IBase* of the power transformer winding W1, then any block signals by the harmonic and/or waveform blocking criteria are overridden, and the differential protection operates quickly without any further delay. If the bias current is lower than 110% of *IBase*, the negative sequence differential protection is restrained by any harmonic block signal.

This logic guarantees a fast disconnection of a faulty power transformer for any heavy faults.

If a fault is classified as external, the further analysis of the fault conditions is initiated. If all the instantaneous differential currents in phases where pickup signals have been issued are free of harmonic pollution, then a (minor) internal fault, simultaneous with a predominant external fault can be suspected. If the differential current is above the restrain limit a trip will be issued.

During external faults, major false differential currents can only exist when one or more current transformers saturate. In this case, the false instantaneous differential currents are polluted by higher harmonic components, the 2nd, the 5th and so on and the differential protection will block the trip operation based on the blocking criteria.

Sensitive negative sequence based turn-to-turn fault protection

The sensitive, negative sequence current based turn-to-turn fault protection detects the low level faults, which are not detected by the traditional differential protection until they develop into more severe faults, including power transformer iron core. The sensitive protection is independent from the traditional differential protection and is a very good complement to it. The essential part of this sensitive protection is the internal/external fault discriminator. In order to be activated, the sensitive protection requires no pickup signal from the traditional power transformer biased differential protection. If magnitudes of HV and LV negative sequence current contributions are above the set limit for *IminNegSeq*, then their relative positions are determined. If the disturbance is characterized as an internal fault, then a separate trip request will be placed. Any decision on the way to the final trip request must be confirmed several times in succession in order to cope with eventual CT transients. This causes a short additional operating time delay due to this security count. For very low level turn-to-turn faults the overall response time of this protection is about 30ms. The sensitive negative sequence differential protection is automatically deactivated if the bias current becomes higher than 150 % *IBase*. Further, this protection can always be restrained by any harmonic block signal. This because at rather low fault currents, which are to be detected by this protection, harmonic pollution is not likely.

6.1.4.10 Instantaneous differential currents

The instantaneous differential currents are calculated from the instantaneous values of the input currents in order to perform the harmonic analysis and waveform analysis upon each one of them (see section "Harmonic and waveform block criteria" for more information).

6.1.4.11 Harmonic and waveform block criteria

The two blocking criteria are the harmonic restrain and the waveform restrain. These two criteria have the power to block a trip command by the restrained differential protection and sensitive negative sequence based turn-to-turn fault protection.

Harmonic restrain

The harmonic restrain is the classical restrain method traditionally used with power transformer differential protections. The goal is to prevent an unwanted trip command due to magnetizing inrush currents at switching operations, or due to magnetizing currents at over-voltages.

The magnetizing currents of a power transformer flow only on one side of the power transformer (one or the other) and are therefore always the cause of false differential currents. The harmonic analysis (the 2nd and the 5th harmonic) is applied to instantaneous differential currents. Typical instantaneous differential currents during power transformer energizing are shown in figure 37. The harmonic analysis is only applied in those phases, where pickup signals have been set. For example, if the content of the 2nd harmonic in the instantaneous differential current of phase A is above the setting *I2/I1Ratio*, then a block signal is set for that phase.

Waveform restrain

The waveform restrain criterion is a good complement to the harmonic analysis. The waveform restrain is a pattern recognition algorithm, which looks for intervals within each fundamental power system cycle with low instantaneous differential current. This interval is often called current gap in protection literature. However, within differential function this criterion actually searches for long-lasting intervals with low rate-of-change in instantaneous differential current, which are typical for the power transformer inrush currents. Block signal BLKWAV is set in those phases where such behavior is detected. The algorithm does not require any end user settings. The waveform algorithm is automatically adapted dependent only on the power transformer rated data.

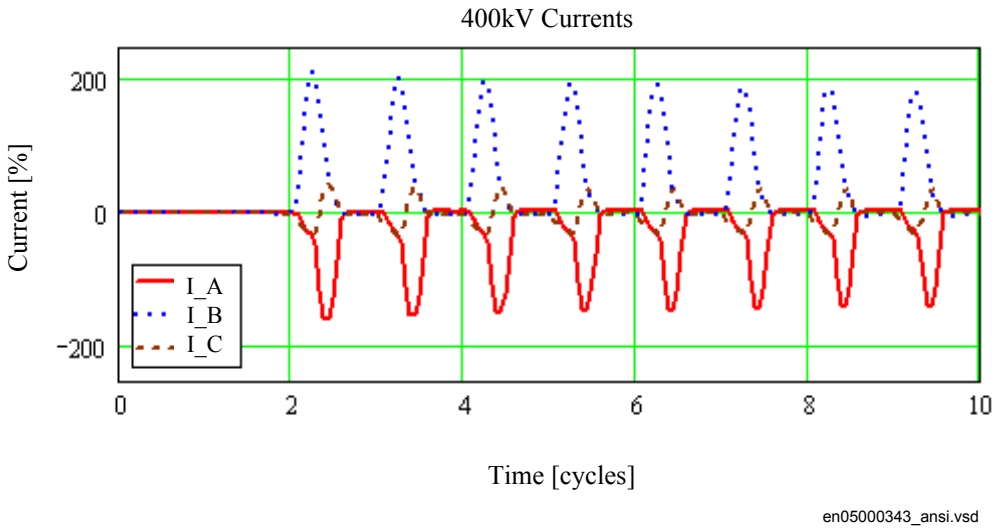

Figure 37: Inrush currents to a transformer as seen by a protection IED. Typical is a high amount of the 2nd harmonic, and intervals of low current, and low rate-of-change of current within each period.

Cross-blocking between phases

With the cross-blocking function, one of the three phases can block operation of the other two phases due to the harmonic pollution of the differential current in that phase (that is, waveform, 2nd or 5th harmonic content). In differential algorithm the user can control the cross-blocking between the phases via the setting parameter *CrossBlockEn*.

When parameter *CrossBlockEn=Enabled* cross blocking between phases is introduced. There is no time settings involved, but the phase with the operating point above the set bias characteristic (in the operate region) will be able to cross-block other two phases if it is itself blocked by any of the previously explained restrained criteria. If the start signal in this phase is removed, that is, reset from TRUE to FALSE, cross blocking from that phase will be inhibited. In this way cross-blocking of the temporary nature is achieved. It should be noted that this is the default (recommended) setting value for this parameter.

When parameter *CrossBlockEn=Disabled*, any cross blocking between phases will be disabled. It is recommended to use the value *Disabled* with caution in order to avoid the unwanted tripping during initial energizing of the power transformer.

6.1.4.12 Switch onto fault feature

Transformer differential function in the IED has a built-in, advanced switch onto fault feature. This feature can be enabled or disabled by a setting parameter *SOTFMode*. When enabled this feature ensures quick differential protection tripping in cases where

a transformer is energized with a more severe (minor faults cannot be discovered) internal fault (for example, forgotten grounding on transformer LV side for example, after a regular service). The feature is based on the waveform check. If a severe internal fault exists, then, during energization the magnetic density in the iron core will be low and high sinusoidal currents will flow from the very beginning. In this case the waveform block algorithm removes all its three block signals in a very short interval of time. This quick reset of the waveblock criterion will temporarily disable the second harmonic blocking feature of the differential protection function. This consequently ensures fast operation of the transformer differential function for a switch onto a fault condition. It shall be noted that this feature is only active during initial power transformer energizing, more exactly, under the first 50 ms. When the switch onto fault feature is disabled by the setting parameter *SOTFMode*, the waveblock and second harmonic blocking features work in parallel and are completely independent from each other.

6.1.4.13 Logic diagram

The simplified internal logics, for transformer differential protection are shown in the following figures.

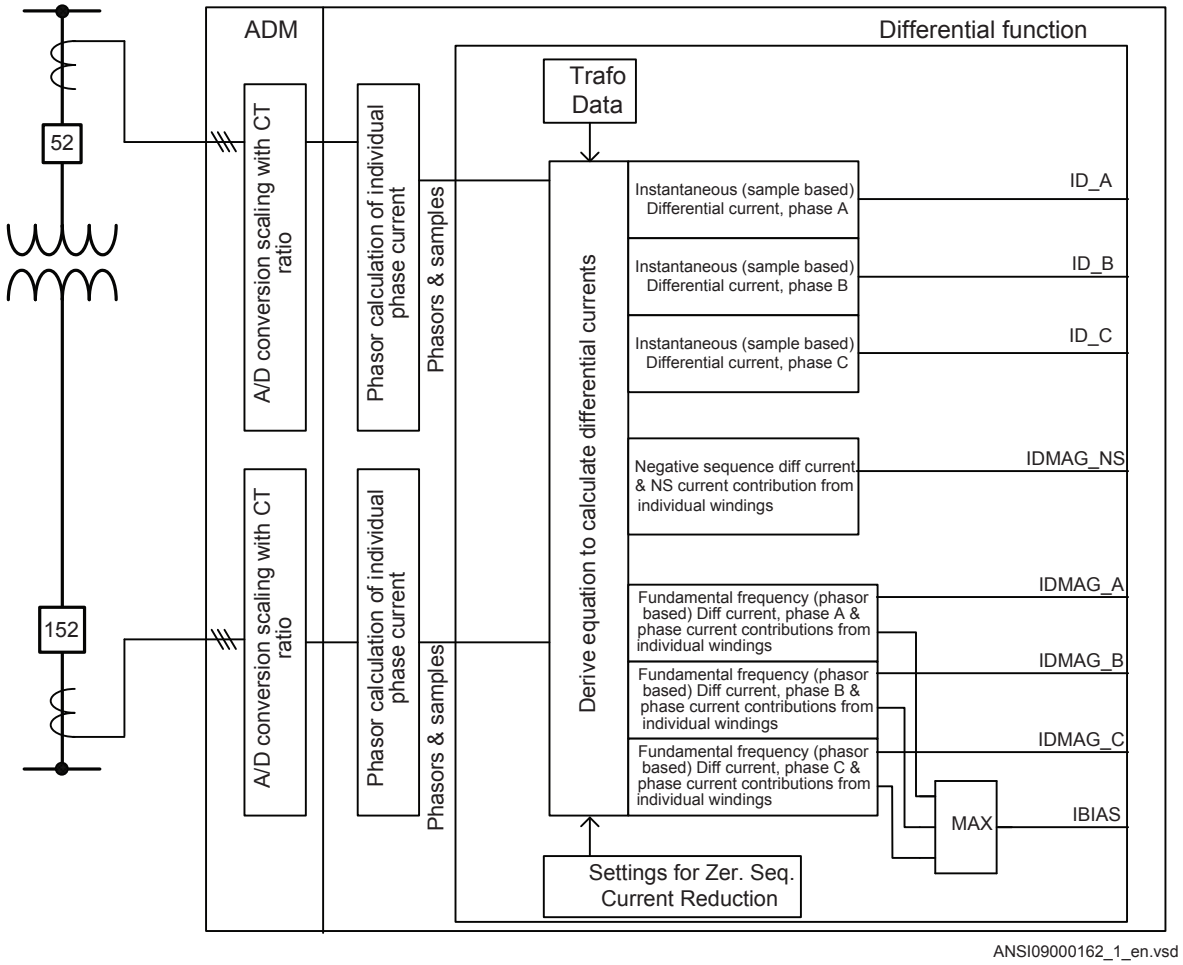

Figure 38: Treatment of measured currents within IED for transformer differential function

Figure 38 shows how internal treatment of measured currents is done in case of two-winding transformer.

The following currents are inputs to the power transformer differential protection function. They must all be expressed in true power system (primary) A.

1. Instantaneous values of currents (samples) from HV, and LV sides for two-winding power transformers, and from the HV, the first LV, and the second LV sides for three-winding power transformers.
2. Currents from all power transformer sides expressed as fundamental frequency phasors, with their real, and imaginary parts. These currents are calculated within the protection function by the fundamental frequency Fourier filters.
3. Negative sequence currents from all power transformer sides expressed as phasors. These currents are calculated within the protection function by the symmetrical components module.

The power transformer differential protection:

1. Calculates three fundamental frequency differential currents, and one common bias current. The zero-sequence component can optionally be eliminated from each of the three fundamental frequency differential currents, and at the same time from the common bias current.
2. Calculates three instantaneous differential currents. They are used for harmonic, and waveform analysis. Instantaneous differential currents are useful for post-fault analysis using disturbance recording
3. Calculates negative-sequence differential current. Contributions to it from all power transformer sides are used by the internal/external fault discriminator to detect and classify a fault as internal or external.

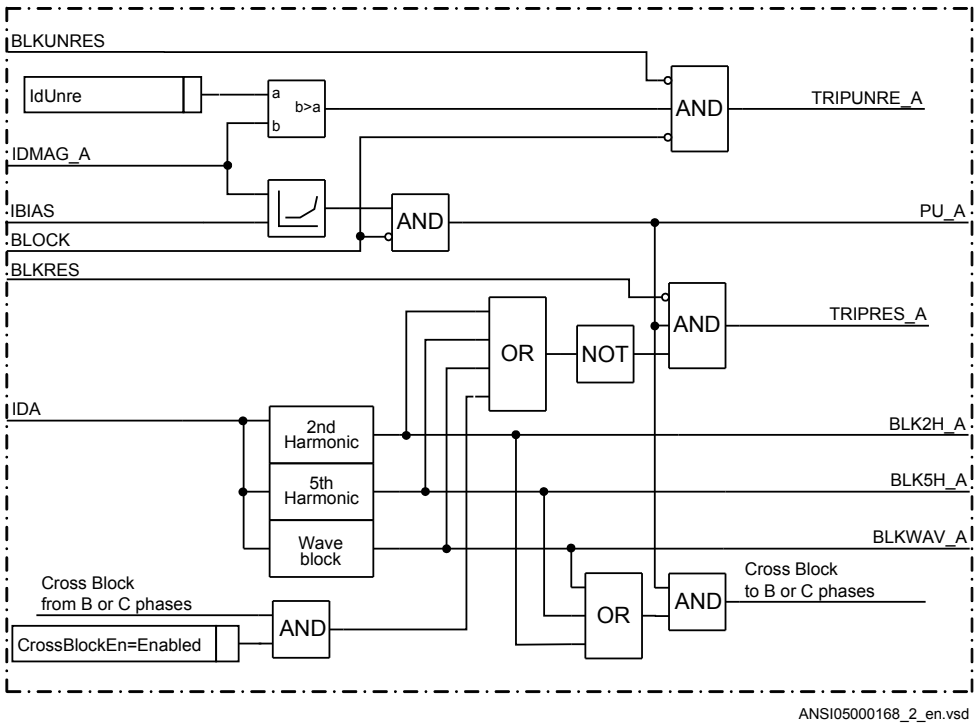

Figure 39: Transformer differential protection simplified logic diagram for Phase A

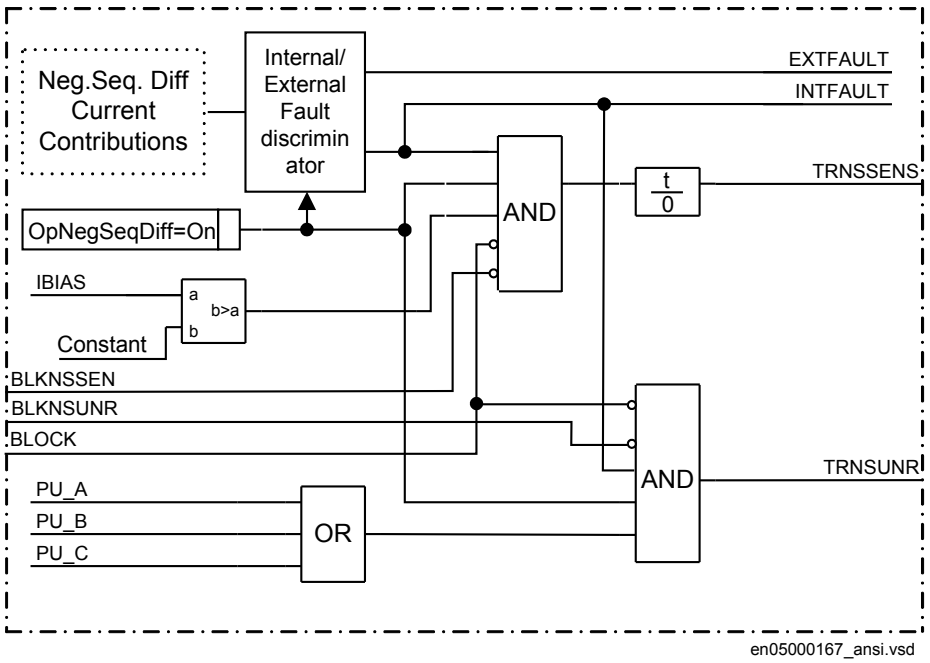

Figure 40: Transformer differential protection simplified logic diagram for internal/ external fault discriminator

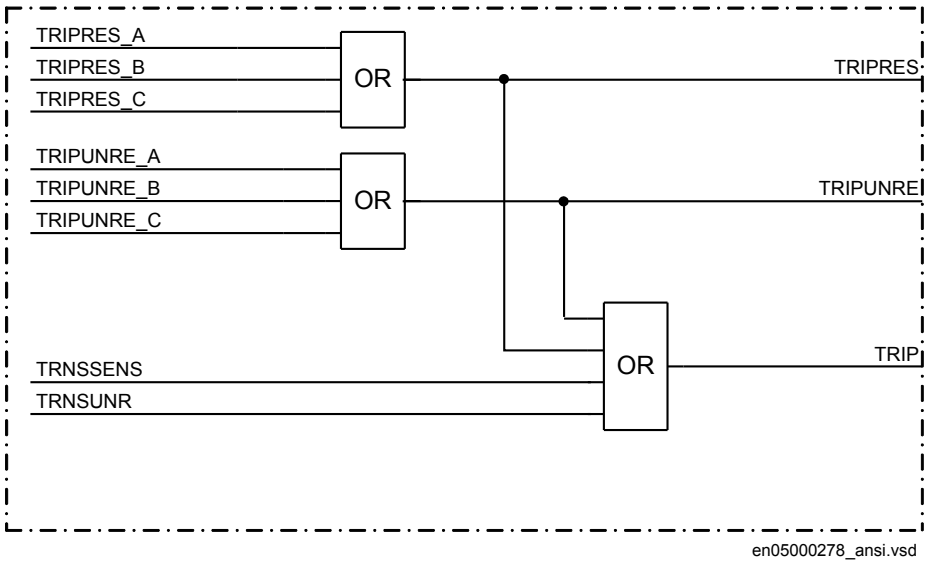

Figure 41: Transformer differential protection internal grouping of tripping signals

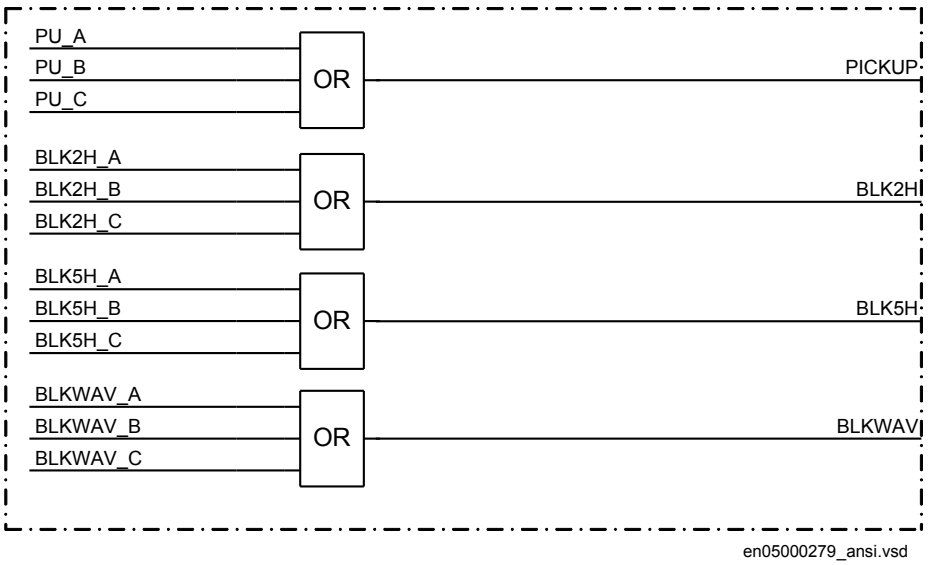

Figure 42: Transformer differential protection internal grouping of logical signals

Logic in figures 39, 40, 41 and 42 can be summarized as follows:

1. The three fundamental frequency differential currents are applied in a phase segregated manner to two limits. The first limit is the operate-restrain characteristic, while the other is the high-set unrestrained limit. If the first limit is exceeded, a pickup signal PICKUP is set. If the unrestrained limit is exceeded, an immediate unrestrained trip TRIPUNRE and common trip TRIP are issued.
2. If a pickup signal is issued in a phase, then the harmonic-, and the waveform block signals are checked. Only a pickup signal, which is free of all of its respective blocking signals, can result in a trip command. If the cross-block logic scheme is applied, then only if all phases with set pickup signal are free of their respective block signals, a restrained trip TRIPRES and common trip TRIP are issued
3. If a pickup signal is issued in a phase, and the fault has been classified as internal, then any eventual block signals are overridden and a unrestrained negative-sequence trip TRNSUNR and common trip TRIP are issued without any further delay. This feature is called the unrestrained negative-sequence protection 110% bias.
4. The sensitive negative sequence differential protection is independent of any pickup signals. It is meant to detect smaller internal faults, such as turn-to-turn faults, which are often not detected by the traditional differential protection. The sensitive negative sequence differential protection pickup whenever both contributions to the total negative sequence differential current (that must be compared by the internal/external fault discriminator) are higher than the value of the setting *IMinNegSeq*. If a fault is positively recognized as internal, and the condition is stable with no interruption for at least one fundamental frequency cycle the sensitive negative sequence differential protection TRNSSENS and

common trip TRIP are issued. This feature is called the sensitive negative sequence differential protection.

5. If a pickup signal is issued in a phase (see signal PU_A), even if the fault has been classified as an external fault, then the instantaneous differential current of that phase (see signal ID_A) is analyzed for the 2nd and the 5th harmonic contents (see the blocks with the text inside: 2nd Harmonic; Wave block and 5th Harmonic). If there is less harmonic pollution, than allowed by the settings *I2/I1Ratio*, and *I5/I1Ratio*, (then the outputs from the blocks 2nd harmonic and 5th harmonic is 0) then it is assumed that a minor simultaneous internal fault must have occurred. Only under these conditions a trip command is allowed (the signal TRIPRES_A is = 1). The cross-block logic scheme is automatically applied under such circumstances. (This means that the cross block signals from the other two phases B and C is not activated to obtain a trip on the TRIPRES_A output signal in figure 39)
6. All pickup and blocking conditions are available as phase segregated as well as common signals.

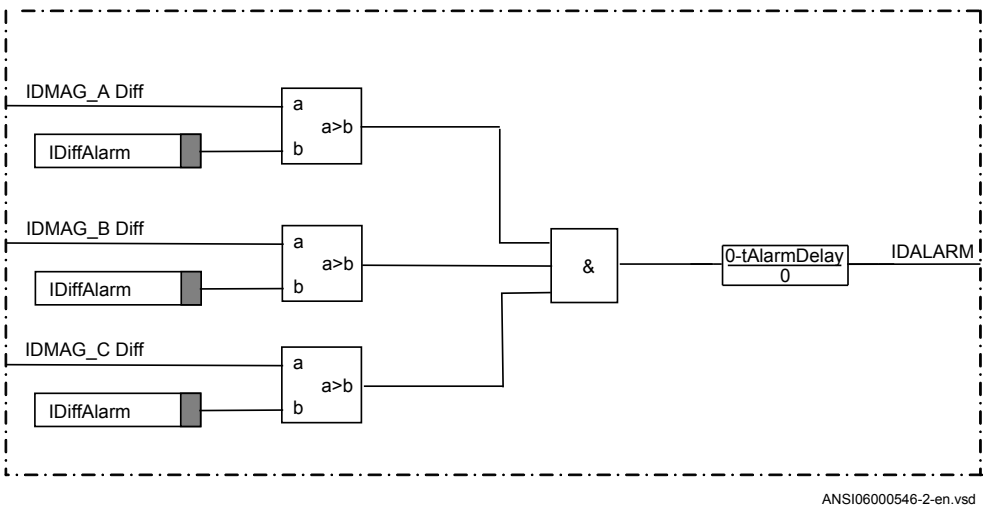

Figure 43: Differential current alarm logic

6.1.5 Technical data

Table 33: T2WPDIF, T3WPDIF (87T) technical data

Function	Range or value	Accuracy
Operating characteristic	Adaptable	± 1.0% of In for I < In ± 1.0% of I for I > In
Reset ratio	>94%	-
Unrestrained differential current limit	(1.00-50.00)x*IBase* on high voltage winding	± 1.0% of set value
Base sensitivity function	(0.05 - 0.60) x *IBase*	± 1.0% of In
Minimum negative sequence current	(0.02 - 0.20) x *IBase*	± 1.0% of In
Operate angle, negative sequence	(30.0 - 90.0) degrees	± 1.0 degrees
Second harmonic blocking	(5.0-100.0)% of fundamental differential current	± 2.0% of applied harmonic magnitude
Fifth harmonic blocking	(5.0-100.0)% of fundamental differential current	± 12.0% of applied harmonic magnitude
Connection type for each of the windings	Wye or delta	-
Phase displacement between high voltage winding, W1 and each of the windings, W2 and W3. Hour notation	0–11	-
Operate time, restrained function	25 ms typically at 0 to 5 x set level	-
Reset time, restrained function	25 ms typically at 5 to 0 x set level	-
Operate time, unrestrained function	20 ms typically at 0 to 5 x set level	-
Reset time, unrestrained function	25 ms typically at 5 to 0 x set level	-

6.2 Restricted earth fault protection, low impedance REFPDIF (87N)

6.2.1 Identification

Function description	IEC 61850 identification	IEC 60617 identification	ANSI/IEEE C37.2 device number
Restricted earth fault protection, low impedance	REFPDIF	*IdN/I*	87N

6.2.2 Functionality

Restricted earth-fault protection, low-impedance function (REFPDIF, 87N) can be used on all solidly or low-impedance grounded windings. The REFPDIF (87N) function provides high sensitivity and high speed tripping as it protects each winding separately and thus does not need inrush stabilization.

The low-impedance function is a percentage biased function with an additional zero sequence current directional comparison criterion. This gives excellent sensitivity and stability during through faults. The function allows the use of different CT ratios and magnetizing characteristics on the phase and neutral CT cores. Unlike high impedance restricted ground fault it allows for mixing with other functions and protection IEDs on the same CT cores.

6.2.3 Function block

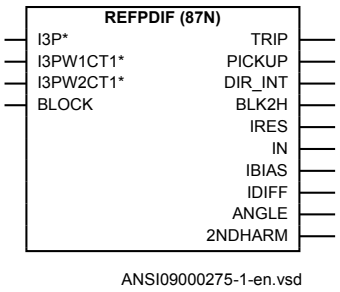

Figure 44: REFPDIF (87N) function block

6.2.4 Signals

Table 34: Input signals for the function block REFPDIF (REF1-)

Signal	Description
I3P	Group signal for neutral current input
I3PW1CT1	Group signal for primary CT1 current input
I3PW2CT1	Group signal for secondary CT1 current input
BLOCK	Block of function

Table 35: Output signals for the function block REFPDIF (REF1-)

Signal	Description
TRIP	General trip signal
START	General start signal
DIROK	Directional criteria has operated for internal fault
BLK2H	Block due to 2-nd harmonic
IRES	Magnitude of fundamental frequency residual current
IN	Magnitude of fundamental frequency neutral current
IBIAS	Magnitude of the bias current
IDIFF	Magnitude of fundamental frequency differential current
ANGLE	Direction angle from zero sequence feature
I2RATIO	Second harmonic ratio

6.2.5 Settings

Table 36: Basic general settings for the function REFPDIF (REF1-)

Parameter	Range	Step	Default	Unit	Description
GlobalBaseSel	1 - 6	1	1	-	Selection of one of the Global Base Value groups

Table 37: Basic parameter group settings for the function REFPDIF (REF1-)

Parameter	Range	Step	Default	Unit	Description
Operation	Off On	-	Off	-	Operation Off / On
IdMin	4.0 - 100.0	0.1	10.0	%IB	Maximum sensitivity in % of IBase

Table 38: Advanced parameter group settings for the function REFPDIF (REF1-)

Parameter	Range	Step	Default	Unit	Description
ROA	60 - 90	1	60	Deg	Relay operate angle for zero sequence directional feature

6.2.6 Monitored data

Table 39: REFPDIF (87N) Monitored data

Name	Type	Values (Range)	Unit	Description
IRES	REAL	-	A	Magnitude of fundamental frequency residual current
IN	REAL	-	A	Magnitude of fundamental frequency neutral current
IBIAS	REAL	-	A	Magnitude of the bias current
IDIFF	REAL	-	A	Magnitude of fundamental frequency differential current
ANGLE	REAL	-	deg	Direction angle from zero sequence feature
2NDHARM	REAL	-	-	Second harmonic ratio

6.2.7 Principle of operation

6.2.7.1 Fundamental principles of the restricted ground fault protection

Restricted earth-fault protection, low impedance function (REFPDIF, 87N) detects ground faults on grounded power transformer windings, most often an groundedwye winding. REFPDIF (87N) is a winding protection of the differential type. Since REFPDIF (87N) is based on the zero sequence currents, which theoretically only exist in case of a ground-fault, REFPDIF (87N) can be made very sensitive, regardless of normal load currents. It is the fastest protection a power transformer winding can have. Remember that the high sensitivity and the high speed tend to make such a protection unstable. Special measures must be taken to make it insensitive to conditions for which it should not operate, for example, heavy through faults of phase-to-phase type, or heavy external ground faults.

REFPDIF(87N) is of the low impedance type. All three-phase currents, and the neutral point current, must be fed separately to REFPDIF(87N). Fundamental frequency components of all currents are extracted from all input currents, while other eventual zero sequence components, such as the 3rd harmonic currents, are fully suppressed. Then the residual current phasor is calculated from the three line current phasors. This zero sequence current phasor is then added to the neutral current vectorially, in order to obtain differential current.

The following facts may be observed from figure 45 and figure 46, where the three line CTs are shown as connected together in order to measure the residual $3I_o$ current, for the sake of simplicity.

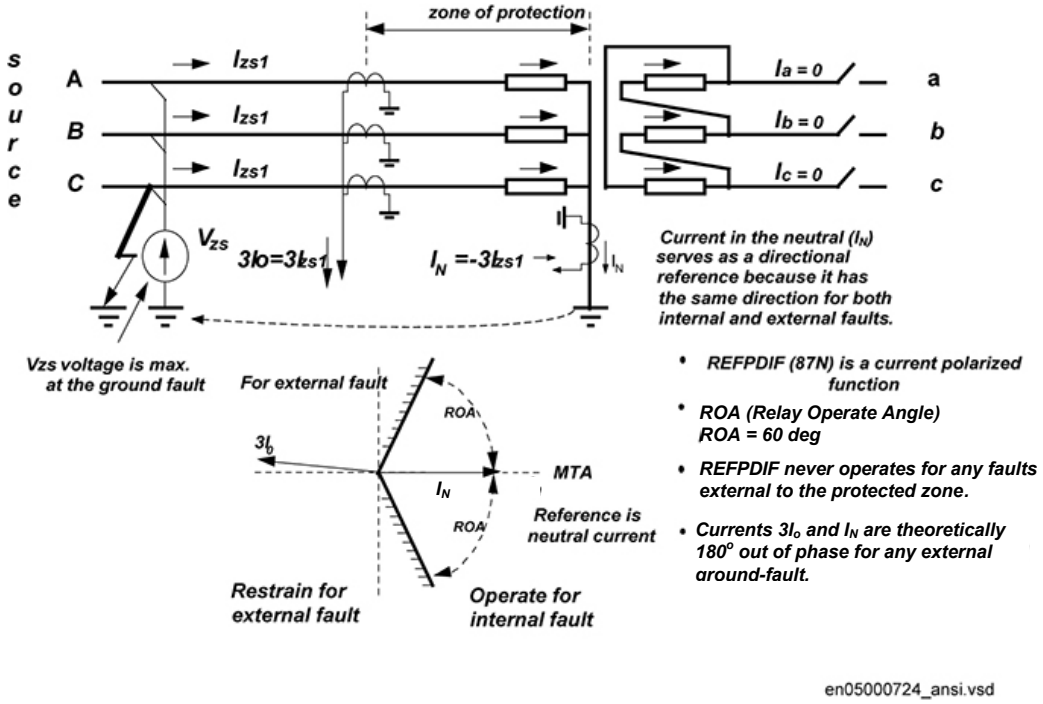

Figure 45: Zero sequence currents at an external ground fault

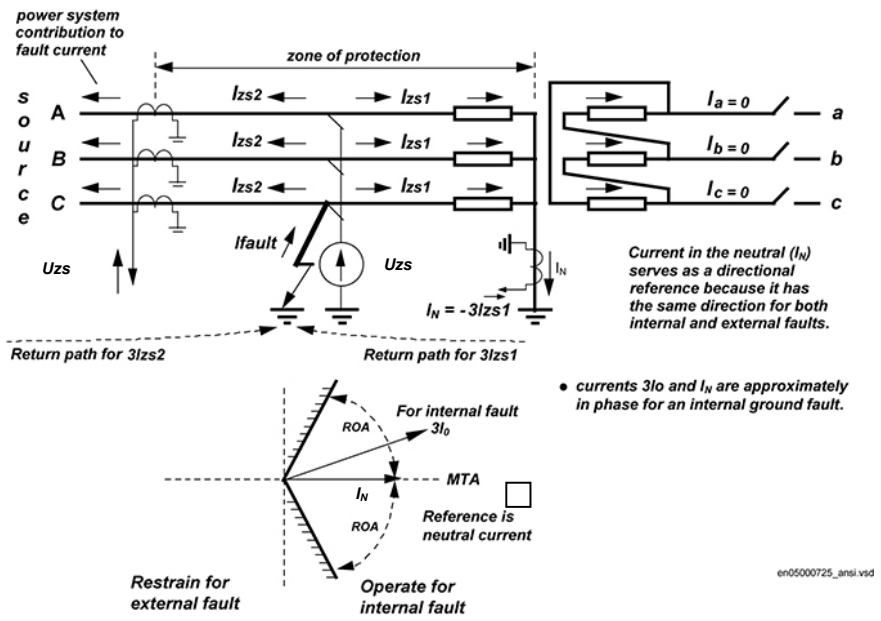

Figure 46: Zero sequence currents at an internal ground fault

1. For an external ground fault (figure 45), the residual current $3I_0$ and the neutral current I_N have equal magnitude, but they are seen by the IED as 180 degrees out-of-phase if the current transformers are connected as in figure 45, which is the ABB recommended connection. The differential current becomes zero as both CTs ideally measure exactly the same component of the ground fault current.
2. For an internal fault, the total ground-fault current is composed generally of two zero sequence current. One zero sequence current IN flows towards the power transformer neutral point and into the ground, while the other zero sequence current $3I_0$ flows out into the connected power system. These two primary currents can be expected to be of approximately opposite directions (about the same zero sequence impedance angle is assumed on both sides of the ground fault). However, on the secondary CT sides of the current transformers, they will be approximately in phase if the current transformers are oriented as in figure 2, which is by ABB recommended orientation. The magnitudes of the two currents may be different, dependent on the magnitudes of zero sequence impedances of both sides. No current can flow towards the power system, if the only point where the system is grounded, is at the protected power transformer. Likewise, no current can flow into the power system, if the winding is not connected to the power system (circuit breaker open and power transformer energized from the other side).
3. For both internal and external ground faults, the current in the neutral connection I_N has always the same direction, that is, towards the ground (This is not valid in case of autotransformers).
4. The two internally processed zero sequence currents are $3I_0$ and I_N. The vectorial sum between them is the REFPDIF (87N) differential current, which is equal to $Idiff = I_N + 3I_0$.

REFPDIF (87N) is a differential protection where the line zero sequence (residual) current is calculated from 3 line (terminal) currents, a bias quantity must give stability against false operations due to high through fault currents. To stabilize REFPDIF at external faults, a fixed bias characteristic is implemented.

REFPDIF (87N) should also be stable against heavy phase-to-phase internal faults, not including ground. These faults may also give false zero sequence currents due to saturated line CTs. Such faults, however are without neutral current, and can thus be eliminated as a source of danger.

As an additional measure against unwanted operation, a directional check is made in agreement with the above points 1 and 2. Operation is only allowed if the currents $3I_0$ and I_N (as shown in figure 45 and figure 46) are both within the operating region. By taking a smaller ROA, REFPDIF (87N) can be made more stable under heavy external fault conditions, as well as under the complex conditions, when external faults are cleared by other protections.

6.2.7.2 Operate and restrain characteristic

Restricted earth-fault protection, low impedance (REFPDIF, 87N) is a winding protection of differential type, whose settings are independent of any other protection. Compared to the transformer differential protection it has some advantages. It is less complicated as no current phase correction and magnitude correction are needed, not even in the case of an On-Load Tap-Changer (OLTC). REFPDIF (87N) is not sensitive to inrush and overexcitation currents. The only danger is current transformer saturation.

REFPDIF (87N) has a fixed operate-restrain characteristic, which is described in table 40, and shown in figure 47.

Table 40: Data of the operate-restrain characteristic of REFPDIF(87N)

Default sensitivity Idmin (zone 1)	Max. base sensitivity Idmin (zone 1)	Min. base sensitivity Idmin (zone 1)	End of zone 1	First slope	Second slope
% IBase	% IBase	% IBase	% IBase	%	%
30	5	100	125	70	100

The bias (restrain) current is supposed to give stability to REFPDIF(87N). The bias current is a measure of how difficult the conditions are under which the CTs operate. The higher the bias current, the more difficult conditions can be suspected, and the more likely that the calculated differential current has a component of a false current, primarily due to CT saturation. This "law" is formulated by the operate-bias characteristic. The restrained part of the differential protection compares the calculated fundamental differential currents, and the bias current, by applying them to the operate-restrain characteristic. The operate-restrain characteristic is represented by a double-slope, doublebreakpoint characteristic, as shown in 47. The restrained characteristic is only determined by *IdMin*, all other parameters are fixed.

Figure 47: Operate - bias characteristic of the Restricted ground-fault protection, low impedance REFPDIF (87N)

6.2.7.3 Calculation of differential current and bias current

The differential current (operate current), as a fundamental frequency phasor, is calculated as (with designations as in figure 45 and figure 46):

$$Idiff = IN + 3I_0$$

(Equation 26)

where:

I_N current in the power transformer neutral as a fundamental frequency phasor,

$3I_0$ residual current of the power transformer line (terminal) currents as a phasor.

The bias current is a measure (expressed internally as a true fundamental frequency current in Amperes) of how difficult the conditions are under which the instrument current transformers operate. Dependent on the magnitude of the bias current, the corresponding zone (section) of the operate - bias characteristic is applied, when deciding whether to trip, or not to trip. In general, the higher the bias current, the higher the differential current required to produce a trip.

The bias current is the highest current of all separate input currents to REFPDIF (87N), that is, of current in phase A, phase B, phase C, and the current in the neutral point (designated as IN in figure 45 and in figure 46).

If there are two feeders included in the zone of protection of REFPDIF (87N), then the respective bias current is found as the relatively highest of the following currents, that is, those which are connected in an application:

$$current[1] = \max(I3PW1CT1) \cdot \frac{1}{CTFactorPri1}$$

(Equation 27)

$$current[3] = \max(I3PW2CT1) \cdot \frac{1}{CTFactorSec1}$$

(Equation 28)

$$current[5] = IN$$

(Equation 29)

The bias current is thus generally equal to none of the input currents. If all primary ratings of the CTs were equal to IBase, then the bias current would be equal to the highest current in Amperes. IBase shall be set equal to the rated current of the protected winding where REFPDIF (87N) function is applied.

6.2.7.4 Detection of external ground faults

External faults are more common than internal ground faults for which the restricted ground fault protection should operate. It is important that the restricted ground fault protection remains stable during heavy external ground and phase-to-phase faults, and also when such a heavy external fault is cleared by some other protection such as overcurrent, or ground-fault protection, and so on. The conditions during a heavy external fault, and particularly immediately after the clearing of such a fault may be

complex. The circuit breaker's poles may not open exactly at the same moment, some of the CTs may still be highly saturated, and so on.

The detection of external ground faults is based on the fact that for such a fault a high neutral current appears first, while a false differential current only appears if one or more current transformers saturate.

For an internal ground fault, a true differential current develops immediately, while for an external fault it only develops if a CT saturates. If a trip request comes first, before an external fault could be positively established, then it must be an internal fault.

If an external ground fault has been detected, then the REFPDIF (87N) is temporarily desensitized.

Directional criterion

The directional criterion is applied in order to positively distinguish between internal and external ground faults. This check is an additional criterion, which should prevent malfunctions at heavy external ground faults, and during the disconnection of such faults by other protections. Ground faults on lines connecting the power transformer occur much more often than ground faults on a power transformer winding. It is important therefore that the Restricted ground fault protection, low impedance (REFPDIF87N) must remain stable during an external fault, and immediately after the fault has been cleared by some other protection.

For an external ground faults with no CT saturation, the residual current in the lines ($3I_o$) and the neutral current (I_N in figure 45) are theoretically equal in magnitude and are 180 degrees out-of-phase. The current in the neutral (I_N) serves as a directional reference because it has the same direction for both internal and external ground faults. The directional criterion in REFPDIF (87N) protection makes it a current-polarized protection.

Second harmonic analysis

On energizing a transformer, a false differential current may appear in the restricted earth-fault protection, low impedance function (REFPDIF 87N). The phase CTs may saturate due to a high DC component with long duration, but the current through the neutral CT does not have either the same DC component or the same magnitude and the risk for saturation in this CT is not as high. The differential current due to the saturation may be so high that it reaches the operate characteristic. A calculation of the content of 2nd harmonic in the neutral current is made when neutral current, residual current and bias current are within some windows and some timing criteria are fulfilled. If the ratio between second and fundamental harmonic exceeds 60%, REFPDIF (87N) is blocked.

6.2.7.5 Algorithm of the restricted ground fault protection

1. Check if the current in the neutral (IN) is less than 50% of the base sensitivity Idmin. If yes, only service values are calculated, and REFPDIF (87N) algorithm is blocked.
2. If the current in the neutral (IN) is more than 50% of Idmin, then determine the bias current Ibias.
3. The differential current phasor (IDIFF) is determined.
4. Check if the point P(Ibias, Idiff) is above the operate - restrain characteristic. If yes, increment the trip request counter by 1. If the point P(Ibias, Idiff) is found to be below the operate - restrain characteristic, then the trip request counter is reset to 0.
5. If the trip request counter is still 0, search for an eventual heavy external ground fault. The search is only made if the neutral current is at least 50% of the *Idmin* current. If an external ground fault has been detected, a flag is set which remains set until the external fault has been cleared. The external fault flag is reset to 0 when IN falls below 50% of the base sensitivity Idmin. Any search for an external fault is aborted if the trip request counter is more than 0.
6. For as long as the external fault persists an additional temporary trip condition is introduced. That means that REFPDIF (87N) is temporarily desensitized.
7. If point P(Ibias, Idiff) is found to be above the operate - restrain characteristic), a directional check can be made. The directional check is made only if (3I0) is more than 3% of the *IBase*. If the result is an external fault the internal trip request is reset. If the directional check cannot be executed, then direction is no longer a condition for a trip.
8. When neutral current, residual current and bias current are within some windows and some timing criteria are fulfilled, the ratio of 2nd to fundamental tone is calculated. If it is found to be above 60% the trip request counter is reset and TRIP remains zero.
9. Finally, a check is made if the trip request counter is equal to, or higher than 2. If it is, and that at the same instance of time $t_{REFtrip}$, the actual bias current at this instance of time $t_{REFtrip}$ is at least 50% of the highest bias current Ibiasmax (Ibiasmax is the highest recording of any of the three phase currents measured during the disturbance) then REFPDIF (87N) sets output TRIP to 1. If the counter is less than 2, TRIP signal remains 0.

6.2.8 Technical data

Table 41: REFPDIF (87N) technical data

Function	Range or value	Accuracy
Operate characteristic	Adaptable	± 1% of IBase if Ibias < 1.25 IBase (i.e. base sensitivity in section 1 of the operate - restrain characteristic) ± 2% of theoretical operate value (Idiff) if Ibias >= 1.25 IBase (i.e. sections 2 and 3) (The above is valid if IBase is equal to the protected winding rated current.)
Reset ratio	0.95	-
Directional characteristic, for zero sequence directional function	ROA ± 60 to ± 90 degrees	± 1 degrees at Ibias = IBase ± 2 degrees at Ibias = 2 * IBase ± 3 degrees at Ibias = 4 * IBase (The above is valid if IBase is equal to the protected winding rated current.)
Operate time, trip function	25 ms typically at 0 to 10 x IdMin	-
Reset time, trip function	30 ms typically at 10 to 0 x IdMin	-

6.3 1Ph High impedance differential protection HZPDIF (87)

6.3.1 Identification

Function description	IEC 61850 identification	IEC 60617 identification	ANSI/IEEE C37.2 device number
1Ph High impedance differential protection	HZPDIF	*Id*	87

6.3.2 Introduction

The 1Ph High impedance differential protection (HZPDIF, 87) function can be used when the involved CTs have the same turns ratio and similar magnetizing characteristics. It utilizes an external summation of the currents in the interconnected

CTs, a series resistor, and a voltage dependent resistor which are mounted externally connected to the IED.

HZPDIF (87) can be used as high impedance REF protection.

6.3.3 Function block

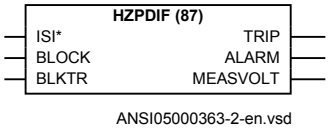

Figure 48: HZPDIF (87) function block

6.3.4 Signals

Table 42: HZPDIF (87) Input signals

Name	Type	Default	Description
ISI	GROUP SIGNAL	-	Group signal for current input
BLOCK	BOOLEAN	0	Block of function
BLKTR	BOOLEAN	0	Block of trip

Table 43: HZPDIF (87) Output signals

Name	Type	Description
TRIP	BOOLEAN	Trip signal
ALARM	BOOLEAN	Alarm signal
MEASVOLT	REAL	Measured RMS voltage on CT secondary side

6.3.5 Settings

Table 44: HZPDIF (87) Group settings (basic)

Name	Values (Range)	Unit	Step	Default	Description
Operation	Disabled Enabled	-	-	Disabled	Disable/Enable Operation
AlarmPickup	2 - 500	V	1	10	Alarm voltage level on CT secondary
tAlarm	0.000 - 60.000	s	0.001	5.000	Time delay to activate alarm
TripPickup	5 - 900	V	1	100	Pickup voltage level in volts on CT secondary side
R series	10 - 20000	ohm	1	1800	Value of series resistor in Ohms

6.3.6 Monitored data

Table 45: HZPDIF (87) Monitored data

Name	Type	Values (Range)	Unit	Description
MEASVOLT	REAL	-	kV	Measured RMS voltage on CT secondary side

6.3.7 Operation principle

The 1Ph High impedance differential protection (HZPDIF, 87) function is based on one current input with external stabilizing resistor and voltage dependent resistor. The stabilizing resistor value is calculated from the function operating value V TripPickup calculated to achieve through fault stability. The used stabilizing resistor value is set by the setting *R series*.

See the application manual for operating voltage and sensitivity calculation.

6.3.7.1 Logic diagram

The logic diagram shows the operation principles for the 1Ph High impedance differential protection function HZPDIF (87), see figure 49. It is a simple one step function with an additional lower alarm level. By activating inputs, the HZPDIF (87) function can either be blocked completely, or only the trip output.

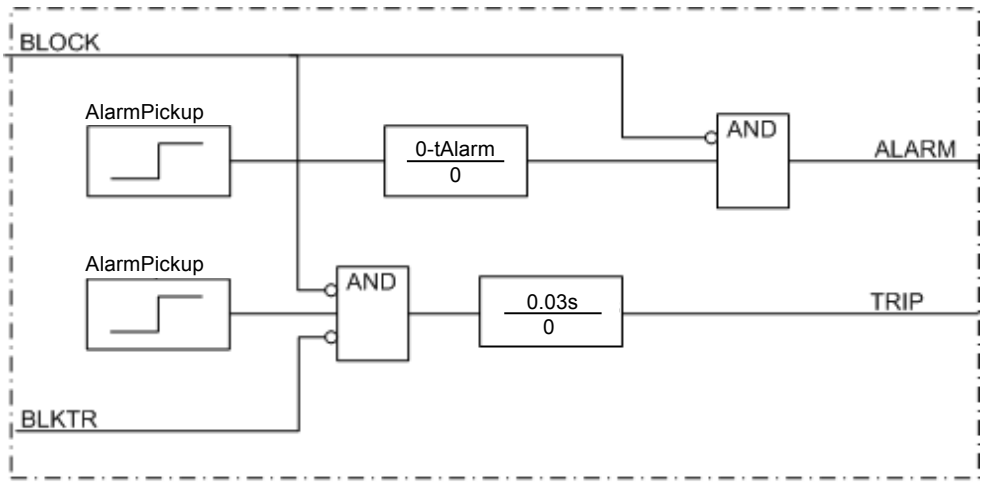

en05000301_ansi.vsd

Figure 49: Logic diagram for 1Ph High impedance differential protection HZPDIF (87)

6.3.8 Technical data

Table 46: HZPDIF (87)technical data

Function	Range or value	Accuracy
Operate voltage	(20-400) V I=V/R	± 1.0% of I_n
Reset ratio	>95%	-
Maximum continuous power	V>Pickup^2/SeriesResistor ≤200 W	-
Operate time	10 ms typically at 0 to 10 x V_d	-
Reset time	105 ms typically at 10 to 0 x V_d	-
Critical impulse time	2 ms typically at 0 to 10 x V_d	-

Section 7 Current protection

7.1 Instantaneous phase overcurrent protection 3-phase output PHPIOC (50)

7.1.1 Identification

Function description	IEC 61850 identification	IEC 60617 identification	ANSI/IEEE C37.2 device number
Instantaneous phase overcurrent protection 3-phase output	PHPIOC	*3I>>*	50

7.1.2 Functionality

The instantaneous three phase overcurrent function has a low transient overreach and short tripping time to allow use as a high set short-circuit protection function.

7.1.3 Function block

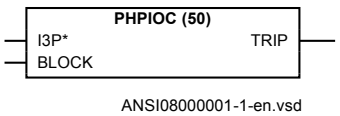

Figure 50: PHPIOC (50) function block

7.1.4 Signals

Table 47: PHPIOC (50) Input signals

Name	Type	Default	Description
I3P	GROUP SIGNAL	-	Three phase group signal for current inputs
BLOCK	BOOLEAN	0	Block of function

Table 48: PHPIOC (50) Output signals

Name	Type	Description
TRIP	BOOLEAN	Common trip signal

7.1.5 Settings

Table 49: PHPIOC (50) Group settings (basic)

Name	Values (Range)	Unit	Step	Default	Description
Operation	Disabled Enabled	-	-	Disabled	Disable/Enable Operation
Pickup	5 - 2500	%IB	1	200	Phase current pickup in % of IBase

Table 50: PHPIOC (50) Non group settings (basic)

Name	Values (Range)	Unit	Step	Default	Description
GlobalBaseSel	1 - 6	-	1	1	Selection of one of the Global Base Value groups

7.1.6 Monitored data

Table 51: PHPIOC (50) Monitored data

Name	Type	Values (Range)	Unit	Description
I_A	REAL	-	A	Current in phase A
I_B	REAL	-	A	Current in phase B
I_C	REAL	-	A	Current in phase C

7.1.7 Operation principle

The sampled analog phase currents are pre-processed in a discrete Fourier filter (DFT) block. The RMS value of each phase current is derived from the fundamental frequency components, as well as sampled values of each phase current. These phase current values are fed to the instantaneous phase overcurrent protection 3-phase output function PHPIOC (50). In a comparator the RMS values are compared to the set operation current value of the function *Pickup*. If a phase current is larger than the set operation current a signal from the comparator for this phase is set to true. This signal will, without delay, activate the TRIP signal that is common for all three phases.

PHPIOC (50) can be blocked from the binary input BLOCK.

7.1.8 Technical data

Table 52: PHPIOC (50) technical data

Function	Range or value	Accuracy
Operate current	(5-2500)% of IBase	± 1.0% of I_n at $I \leq I_n$ ± 1.0% of I at $I > I_n$
Reset ratio	> 95%	-
Operate time	20 ms typically at 0 to 2 x I_{set}	-
Reset time	30 ms typically at 2 to 0 x I_{set}	-
Critical impulse time	10 ms typically at 0 to 2 x I_{set}	-
Operate time	10 ms typically at 0 to 5 x I_{set}	-
Reset time	40 ms typically at 5 to 0 x I_{set}	-
Critical impulse time	2 ms typically at 0 to 5 x I_{set}	-
Dynamic overreach	< 5% at τ = 100 ms	-

7.2 Four step phase overcurrent protection 3-phase output OC4PTOC (51/67)

7.2.1 Identification

Function description	IEC 61850 identification	IEC 60617 identification	ANSI/IEEE C37.2 device number
Four step phase overcurrent protection 3-phase output	OC4PTOC	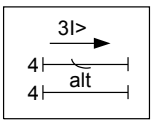	51/67

7.2.2 Functionality

The four step phase overcurrent protection function, 3-phase output OC4PTOC (51/67) has independent inverse time delay settings for step 1 and 4. Step 2 and 3 are always definite time delayed.

All IEC and ANSI inverse time characteristics are available.

The directional function is voltage polarized with memory. The function can be set to be directional or non-directional independently for each of the steps.

A 2nd harmonic blocking can be set individually for each step.

7.2.3 Function block

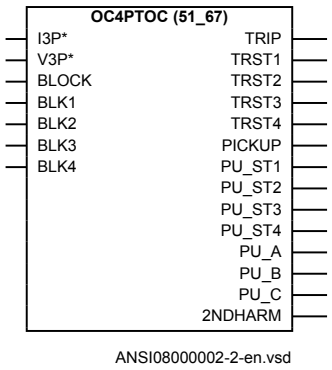

Figure 51: OC4PTOC (51/67) function block

7.2.4 Signals

Table 53: OC4PTOC (51_67) Input signals

Name	Type	Default	Description
I3P	GROUP SIGNAL	-	Three phase group signal for current inputs
V3P	GROUP SIGNAL	-	Three phase group signal for voltage inputs
BLOCK	BOOLEAN	0	Block of function
BLK1	BOOLEAN	0	Block of step 1
BLK2	BOOLEAN	0	Block of step 2
BLK3	BOOLEAN	0	Block of step 3
BLK4	BOOLEAN	0	Block of step 4

Table 54: OC4PTOC (51_67) Output signals

Name	Type	Description
TRIP	BOOLEAN	Common trip signal
TRST1	BOOLEAN	Trip signal from step 1
TRST2	BOOLEAN	Trip signal from step 2
TRST3	BOOLEAN	Trip signal from step 3

Table continues on next page

Name	Type	Description
TRST4	BOOLEAN	Trip signal from step 4
PICKUP	BOOLEAN	General pickup signal
PU_ST1	BOOLEAN	Start signal from step 1
PU_ST2	BOOLEAN	Start signal from step 2
PU_ST3	BOOLEAN	Start signal from step 3
PU_ST4	BOOLEAN	Start signal from step 4
PU_A	BOOLEAN	Pickup signal from phase A
PU_B	BOOLEAN	Pickup signal from phase B
PU_C	BOOLEAN	Pickup signal from phase C
2NDHARM	BOOLEAN	Block from second harmonic detection

7.2.5 Settings

Table 55: OC4PTOC (51_67) Group settings (basic)

Name	Values (Range)	Unit	Step	Default	Description
Operation	Disabled Enabled	-	-	Disabled	Disable/Enable Operation
DirModeSel1	Disabled Non-directional Forward Reverse	-	-	Non-directional	Directional mode of step 1 off / non-directional / forward / reverse
Characterist1	ANSI Ext. inv. ANSI Very inv. ANSI Norm. inv. ANSI Mod. inv. ANSI Def. Time L.T.E. inv. L.T.V. inv. L.T. inv. IEC Norm. inv. IEC Very inv. IEC inv. IEC Ext. inv. IEC S.T. inv. IEC L.T. inv. IEC Def. Time Reserved RI type RD type	-	-	ANSI Def. Time	Selection of time delay curve type for step 1
Pickup1	5 - 2500	%IB	1	1000	Phase current operate level for step1 in % of IBase
t1	0.000 - 60.000	s	0.001	0.000	Definite time delay of step 1
TD1	0.05 - 999.00	-	0.01	0.05	Time multiplier for the inverse time delay for step 1
IMin1	5 - 10000	%IB	1	100	Minimum operate current for step1in% of IBase

Table continues on next page

Name	Values (Range)	Unit	Step	Default	Description
t1Min	0.000 - 60.000	s	0.001	0.000	Minimum operate time for inverse curves for step 1
DirModeSel2	Disabled Non-directional Forward Reverse	-	-	Non-directional	Directional mode of step 2 off / non-directional / forward / reverse
Pickup2	5 - 2500	%IB	1	500	Phase current operate level for step 2 in % of IBase
t2	0.000 - 60.000	s	0.001	0.400	Definite time delay of step 2
DirModeSel3	Disabled Non-directional Forward Reverse	-	-	Non-directional	Directional mode of step 3 off / non-directional / forward / reverse
Pickup3	5 - 2500	%IB	1	250	Phase current operate level for step3 in % of IBase
t3	0.000 - 60.000	s	0.001	0.800	Definite time delay of step 3
DirModeSel4	Disabled Non-directional Forward Reverse	-	-	Non-directional	Directional mode of step 4 off / non-directional / forward / reverse
Characterist4	ANSI Ext. inv. ANSI Very inv. ANSI Norm. inv. ANSI Def. Time L.T.E. inv. L.T.V. inv. L.T. inv. IEC Norm. inv. IEC Very inv. IEC inv. IEC Ext. inv. IEC S.T. inv. IEC L.T. inv. IEC Def. Time Reserved RI type RD type	-	-	ANSI Def. Time	Selection of time delay curve type for step 4
Pickup4	5 - 2500	%IB	1	175	Phase current operate level for step 4 in % of IBase
t4	0.000 - 60.000	s	0.001	2.000	Definite time delay of step 4
TD4	0.05 - 999.00	-	0.01	0.05	Time multiplier for the inverse time delay for step 4
IMin4	5 - 10000	%IB	1	100	Minimum operate current for step4 in % of IBase
t4Min	0.000 - 60.000	s	0.001	0.000	Minimum operate time for inverse curves for step 4

Table 56: OC4PTOC (51_67) Group settings (advanced)

Name	Values (Range)	Unit	Step	Default	Description
2ndHarmStab	5 - 100	%IB	1	20	Pickup of second harm restraint in % of Fundamental
HarmRestrain1	Disabled Enabled	-	-	Disabled	Enable block of step 1 from harmonic restrain
HarmRestrain2	Disabled Enabled	-	-	Disabled	Enable block of step 2 from harmonic restrain
HarmRestrain3	Disabled Enabled	-	-	Disabled	Enable block of step3 from harmonic restrain
HarmRestrain	Disabled Enabled	-	-	Disabled	Enable block from harmonic restrain
PUMinFund	5 - 100	%IB	1	7	Fundamental frequency current level in % of IBase
HarmRestrain4	Disabled Enabled	-	-	Disabled	Enable block of step 4 from harmonic restrain

Table 57: OC4PTOC (51_67) Non group settings (basic)

Name	Values (Range)	Unit	Step	Default	Description
GlobalBaseSel	1 - 6	-	1	1	Selection of one of the Global Base Value groups
MeasType	DFT RMS	-	-	DFT	Selection between DFT and RMS measurement

7.2.6 Monitored data

Table 58: OC4PTOC (51_67) Monitored data

Name	Type	Values (Range)	Unit	Description
DIR_A	INTEGER	0=No direction 1=Forward 2=Reverse	-	Direction for phase A
DIR_B	INTEGER	0=No direction 1=Forward 2=Reverse	-	Direction for phase B
DIR_C	INTEGER	0=No direction 1=Forward 2=Reverse	-	Direction for phase C
I_A	REAL	-	A	Current in phase A
I_B	REAL	-	A	Current in phase B
I_C	REAL	-	A	Current in phase C

7.2.7 Operation principle

The protection design can be decomposed in four parts:

- The direction element
- The harmonic Restraint Blocking function
- The four step over current function
- The mode selection

If VT inputs are not available or not connected, setting parameter *DirModeSelx* shall be left to default value, *Non-directional*.

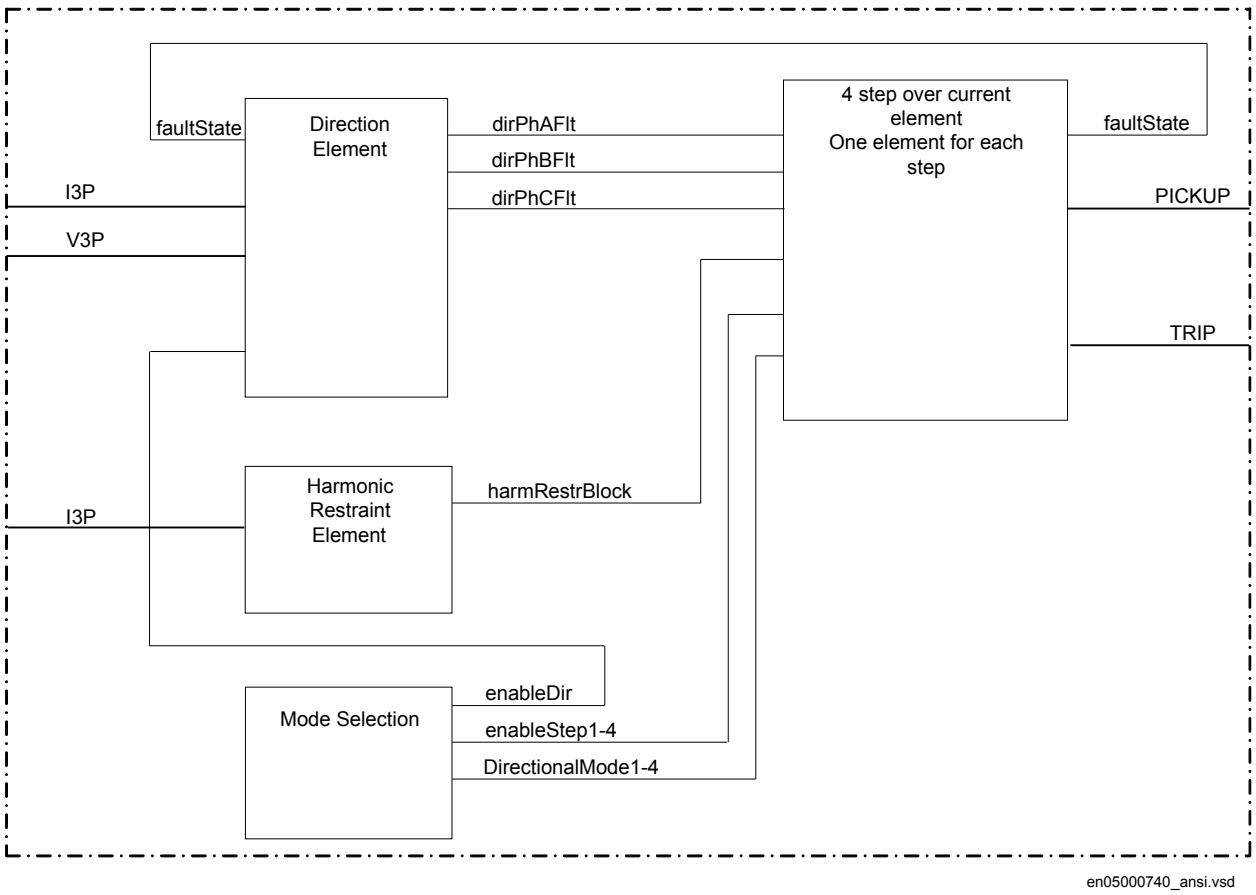

Figure 52: Functional overview of OC4PTOC (51/67)

The sampled analog phase currents are processed in a pre-processing function block. Using a parameter setting *MeasType* within the general settings for the four step phase

overcurrent protection 3-phase output function OC4PTOC (51/67), it is possible to select the type of the measurement used for all overcurrent stages. It is possible to select either discrete Fourier filter (DFT) or true RMS filter (RMS).

If DFT option is selected then only the RMS value of the fundamental frequency components of each phase current is derived. Influence of DC current component and higher harmonic current components are almost completely suppressed. If RMS option is selected then the true RMS values is used. The true RMS value in addition to the fundamental frequency component includes the contribution from the current DC component as well as from higher current harmonic. The selected current values are fed to OC4PTOC (51/67).

In a comparator, for each phase current, the DFT or RMS values are compared to the set operation current value of the function *(Pickup1, Pickup2, Pickup3, Pickup4)*. If a phase current is larger than the set operation current, outputs PICKUP, PU_STx, PU_A, PU_B and PU_C are, without delay, activated. Output signals PU_A, PU_B and PU_C are common for all steps. This means that the lowest set step will initiate the activation. The PICKUP signal is common for all three phases and all steps. It shall be noted that the selection of measured value (DFT or RMS) do not influence the operation of directional part of OC4PTOC (51/67) .

Service value for individually measured phase currents are also available on the local HMI for OC4PTOC (51/67) function, which simplifies testing, commissioning and in service operational checking of the function.

A harmonic restrain of the function can be chosen. A set 2nd harmonic current in relation to the fundamental current is used. The 2nd harmonic current is taken from the pre-processing of the phase currents and the relation is compared to a set restrain current level.

The function can be directional. The direction of the fault current is given as current angle in relation to the voltage angle. The fault current and fault voltage for the directional function is dependent of the fault type. To enable directional measurement at close in faults, causing low measured voltage, the polarization voltage is a combination of the apparent voltage (85%) and a memory voltage (15%). The following combinations are used.

Phase-phase short circuit:

$$V_{ref\_AB} = V_A - V_B \quad I_{dir\_AB} = I_A - I_B$$

(Equation 30)

$$V_{ref\_BC} = V_B - V_C \quad I_{dir\_BC} = I_B - I_C$$

(Equation 31)

Table continues on next page

$$V_{ref\_CA} = V_C - V_A \quad I_{dir\_CA} = I_C - I_A$$

(Equation 32)

Phase-ground short circuit:

$$V_{ref\_A} = V_A \quad I_{dir\_A} = I_A$$

(Equation 33)

$$V_{ref\_B} = V_B \quad I_{dir\_B} = I_B$$

(Equation 34)

$$V_{ref\_C} = V_C \quad I_{dir\_C} = I_C$$

(Equation 35)

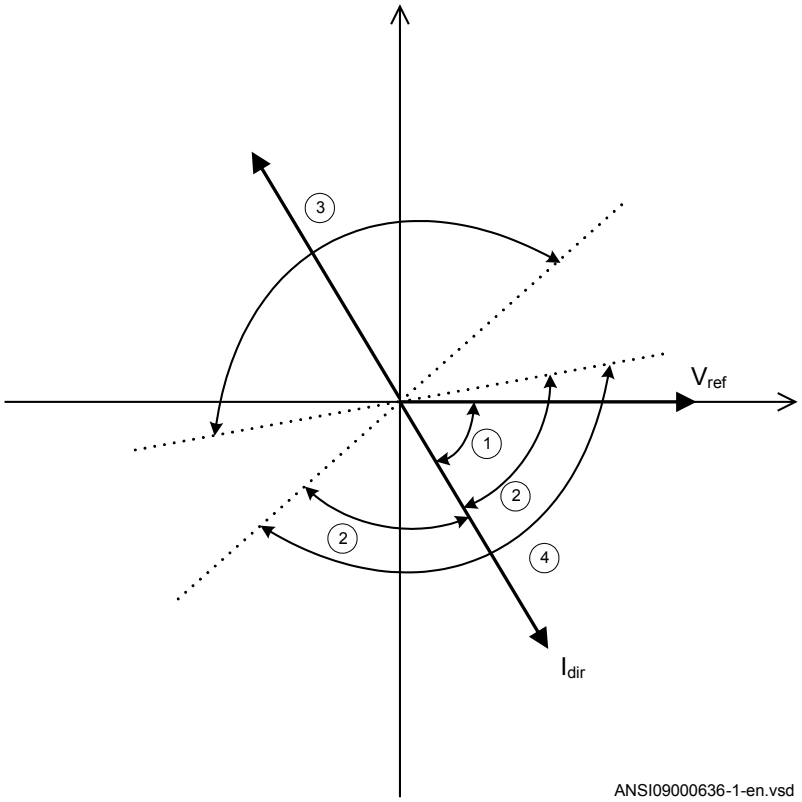

Figure 53: Directional characteristic of the phase overcurrent protection

1 RCA = Relay characteristic angle 55°
2 ROA = Relay operating angle 80°
3 Reverse
4 Forward

If no blockings are given the pickup signals will start the timers of the step. The time characteristic for step 1 and 4 can be chosen as definite time delay or inverse time characteristic. Step 2 and 3 are always definite time delayed. A wide range of standardized inverse time characteristics is available. The possibilities for inverse time characteristics are described in section "Inverse time characteristics".

All four steps in OC4PTOC (51/67) can be blocked from the binary input BLOCK. The binary input BLKx (x=1, 2, 3 or 4) blocks the operation of respective step.

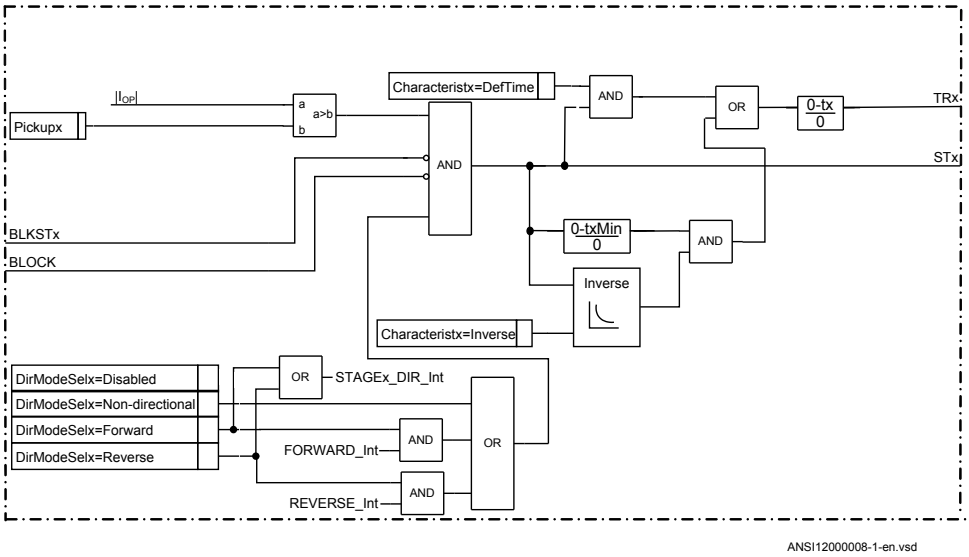

Figure 54: Simplified logic diagram for OC4PTOC

7.2.8 Technical data

Table 59: OC4PTOC (51/67) technical data

Function	Setting range	Accuracy
Operate current	(5-2500)% of *IBase*	± 1.0% of I_n at I ≤ I_n ± 1.0% of I at I > I_n
Reset ratio	> 95%	-
Min. operating current	(1-10000)% of *IBase*	± 1.0% of I_n at I ≤ I_n ±1.0% of I at I > I_n
2nd harmonic blocking	(5–100)% of fundamental	± 2.0% of I_n
Independent time delay	(0.000-60.000) s	± 0.5% ±25 ms
Minimum operate time for inverse characteristics	(0.000-60.000) s	± 0.5% ±25 ms
Inverse characteristics, see table 480, table 481 and table 482	17 curve types	1) ANSI/IEEE C37.112 IEC 60255–151 ±3% or ±40 ms 0.10 ≤ k ≤ 3.00 1.5 x I_{set} ≤ I ≤ 20 x I_{set}
Operate time, nondirectional pickup function	25 ms typically at 0 to 2 x I_{set}	-
Reset time, pickup function	30 ms typically at 2 to 0 x I_{set}	-
Operate time, directional pickup function	50 ms typically at 0 to 2 x I_{set}	-
Table continues on next page		

Function	Setting range	Accuracy
Reset time, directional pickup function	35 ms typically at 2 to 0 x I_{set}	-
Critical impulse time	10 ms typically at 0 to 2 x I_{set}	-
Impulse margin time	15 ms typically	-
[1] **Note:** Timing accuracy only valid when 2nd harmonic blocking is turned off		

7.3 Instantaneous residual overcurrent protection EFPIOC (50N)

7.3.1 Identification

Function description	IEC 61850 identification	IEC 60617 identification	ANSI/IEEE C37.2 device number
Instantaneous residual overcurrent protection	EFPIOC	*IN>>*	50N

7.3.2 Functionality

The Instantaneous residual overcurrent protection EFPIOC (50N) has a low transient overreach and short tripping times to allow use for instantaneous ground-fault protection, with the reach limited to less than typical eighty percent of the transformer impedance at minimum source impedance. EFPIOC (50N) can be configured to measure the residual current from the three-phase current inputs or the current from a separate current input. EFPIOC (50N) can be blocked by activating the input BLOCK.

7.3.3 Function block

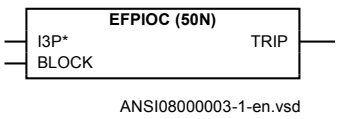

Figure 55: EFPIOC (50N) function block

7.3.4 Signals

Table 60: EFPIOC (50N) Input signals

Name	Type	Default	Description
I3P	GROUP SIGNAL	-	Three phase group signal for current inputs
BLOCK	BOOLEAN	0	Block of function

Table 61: EFPIOC (50N) Output signals

Name	Type	Description
TRIP	BOOLEAN	Trip signal

7.3.5 Settings

Table 62: EFPIOC (50N) Group settings (basic)

Name	Values (Range)	Unit	Step	Default	Description
Operation	Disabled Enabled	-	-	Disabled	Disable/Enable Operation
Pickup	1 - 2500	%IB	1	200	Operate residual current level in % of IBase

Table 63: EFPIOC (50N) Non group settings (basic)

Name	Values (Range)	Unit	Step	Default	Description
GlobalBaseSel	1 - 6	-	1	1	Selection of one of the Global Base Value groups

7.3.6 Monitored data

Table 64: EFPIOC (50N) Monitored data

Name	Type	Values (Range)	Unit	Description
IN	REAL	-	A	Residual current

7.3.7 Operation principle

The sampled analog residual currents are pre-processed in a discrete Fourier filter (DFT) block. From the fundamental frequency components of the residual current, as well as from the sample values the equivalent RMS value is derived. This current value is fed to the Instantaneous residual overcurrent protection (EFPIOC,50N). In a

comparator the RMS value is compared to the set operation current value of the function (*Pickup*). If the residual current is larger than the set operation current a signal from the comparator is set to true. This signal will, without delay, activate the output signal TRIP.

7.3.8 Technical data

Table 65: EFPIOC (50N) technical data

Function	Range or value	Accuracy
Operate current	(1-2500)% of IBase	± 1.0% of I_n at $I \leq I_n$ ± 1.0% of I at $I > I_n$
Reset ratio	> 95%	-
Operate time	20 ms typically at 0 to 2 x I_{set}	-
Reset time	30 ms typically at 2 to 0 x I_{set}	-
Critical impulse time	10 ms typically at 0 to 2 x I_{set}	-
Operate time	10 ms typically at 0 to 5x I_{set}	-
Reset time	40 ms typically at 5 to 0x I_{set}	-
Critical impulse time	2 ms typically at 0 to 5 x I_{set}	-
Dynamic overreach	< 5% at τ = 100 ms	-

7.4 Four step residual overcurrent protection, zero, negative sequence direction EF4PTOC (51N/67N)

7.4.1 Identification

Function description	IEC 61850 identification	IEC 60617 identification	ANSI/IEEE C37.2 device number
Four step residual overcurrent protection, zero or negative sequence direction	EF4PTOC	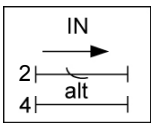	51N/67N

7.4.2 Functionality

The four step residual overcurrent protection, zero or negative sequence direction (EF4PTOC, 51N/67N) has independent inverse time delay settings for step 1 and 4. Step 2 and 3 are always definite time delayed.

All IEC and ANSI inverse time characteristics are available.

EF4PTOC (51N/67N) can be set directional or non-directional independently for each of the steps.

The directional part of the function can be set to operate on following combinations:

- Directional current (I3PDir) versus Polarizing voltage (V3PPol)
- Directional current (I3PDir) versus Polarizing current (I3PPol)
- Directional current (I3PDir) versus Dual polarizing (VPol+ZPol x IPol) where ZPol = RPol + jXPol

IDir, VPol and IPol can be independently selected to be either zero sequence or negative sequence.

Other setting combinations are possible, but not recommended.

Second harmonic blocking restraint level can be set for the function and can be used to block each step individually.

7.4.3 Function block

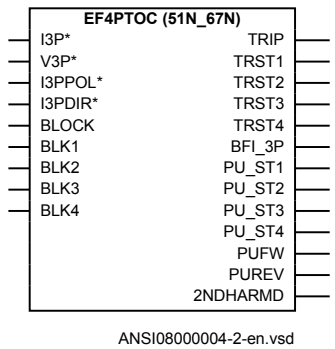

Figure 56: EF4PTOC (51N/67N) function block

7.4.4 Signals

Table 66: EF4PTOC (51N_67N) Input signals

Name	Type	Default	Description
I3P	GROUP SIGNAL	-	Three phase group signal for current inputs
V3P	GROUP SIGNAL	-	Three phase group signal for polarizing voltage inputs
I3PPOL	GROUP SIGNAL	-	Three phase group signal for polarizing current inputs
I3PDIR	GROUP SIGNAL	-	Three phase group signal for operating directional inputs
BLOCK	BOOLEAN	0	Block of function
BLK1	BOOLEAN	0	Block of step 1 (start and trip)
BLK2	BOOLEAN	0	Block of step 2 (start and trip)
BLK3	BOOLEAN	0	Block of step 3 (start and trip)
BLK4	BOOLEAN	0	Block of step 4 (start and trip)

Table 67: EF4PTOC (51N_67N) Output signals

Name	Type	Description
TRIP	BOOLEAN	Common trip signal
TRST1	BOOLEAN	Trip signal from step 1
TRST2	BOOLEAN	Trip signal from step 2
TRST3	BOOLEAN	Trip signal from step 3
TRST4	BOOLEAN	Trip signal from step 4
PICKUP	BOOLEAN	General pickup signal
PU_ST1	BOOLEAN	Pickup signal step 1
PU_ST2	BOOLEAN	Pickup signal step 2
PU_ST3	BOOLEAN	Pickup signal step 3
PU_ST4	BOOLEAN	Pickup signal step 4
PUFW	BOOLEAN	Forward directional pickup signal
PUREV	BOOLEAN	Reverse directional pickup signal
2NDHARMD	BOOLEAN	2nd harmonic block signal

7.4.5 Settings

Table 68: EF4PTOC (51N_67N) Group settings (basic)

Name	Values (Range)	Unit	Step	Default	Description
Operation	Disabled Enabled	-	-	Disabled	Operation Disable / Enable
EnaDir	Disable Enable	-	-	Enable	Enabling the Directional calculation
AngleRCA	-180 - 180	Deg	1	65	Relay characteristic angle (RCA)
polMethod	Voltage Current Dual	-	-	Voltage	Type of polarization
VPolMin	1 - 100	%VB	1	1	Minimum voltage level for polarization (UN or U2) in % of UBase
IPolMin	2 - 100	%IB	1	5	Minimum current level for polarization (IN or I2) in % of IBase
RPol	0.50 - 1000.00	ohm	0.01	5.00	Real part of source Z to be used for current polarisation
XPol	0.50 - 3000.00	ohm	0.01	40.00	Imaginary part of source Z to be used for current polarisation
I>Dir	1 - 100	%IB	1	10	Current level (IN or I2) for direction release in % of IBase
2ndHarmStab	5 - 100	%	1	20	Second harmonic restrain operation in % of IN magnitude
DirModeSel1	Disabled Non-directional Forward Reverse	-	-	Non-directional	Directional mode of step 1 (off, non-directional, forward, reverse)
Characterist1	ANSI Ext. inv. ANSI Very inv. ANSI Norm. inv. ANSI Mod. inv. ANSI Def. Time L.T.E. inv. L.T.V. inv. L.T. inv. IEC Norm. inv. IEC Very inv. IEC inv. IEC Ext. inv. IEC S.T. inv. IEC L.T. inv. IEC Def. Time Reserved RI type RD type	-	-	ANSI Def. Time	Time delay curve type for step 1
Pickup1	1 - 2500	%IB	1	100	Residual current pickup for step 1 in % of IBase
t1	0.000 - 60.000	s	0.001	0.000	Independent (definite) time delay of step 1

Table continues on next page

Name	Values (Range)	Unit	Step	Default	Description
TD1	0.05 - 999.00	-	0.01	0.05	Time multiplier for the dependent time delay for step 1
IMin1	1 - 10000	%IB	1	100	Minimum operate current for step1in% of IBase
t1Min	0.000 - 60.000	s	0.001	0.000	Minimum operate time for inverse curves for step 1
HarmRestrain1	Disabled Enabled	-	-	Enabled	Enable block of step 1 from harmonic restrain
DirModeSel2	Disabled Non-directional Forward Reverse	-	-	Non-directional	Directional mode of step 2 (off, non-directional, forward, reverse)
Pickup2	1 - 2500	%IB	1	50	Residual current pickup for step 2 in % of IBase
t2	0.000 - 60.000	s	0.001	0.400	Independent (definite) time delay of step 2
IMin2	1 - 10000	%IB	1	50	Minimum operate current for step 2 in % of IBase
HarmRestrain2	Disabled Enabled	-	-	Enabled	Enable block of step 2 from harmonic restrain
DirModeSel3	Disabled Non-directional Forward Reverse	-	-	Non-directional	Directional mode of step 3 (off, non-directional, forward, reverse)
Pickup3	1 - 2500	%IB	1	33	Residual current pickup for step 3 in % of IBase
t3	0.000 - 60.000	s	0.001	0.800	Independent (definite) time delay of step 3
IMin3	1 - 10000	%IB	1	33	Minimum operate current for step 3 in % of IBase
HarmRestrain3	Disabled Enabled	-	-	Enabled	Enable block of step 3 from harmonic restrain
DirModeSel4	Disabled Non-directional Forward Reverse	-	-	Non-directional	Directional mode of step 4 (off, non-directional, forward, reverse)
Characterist4	ANSI Ext. inv. ANSI Very inv. ANSI Norm. inv. ANSI Mod. inv. ANSI Def. Time L.T.E. inv. L.T.V. inv. L.T. inv. IEC Norm. inv. IEC Very inv. IEC inv. IEC Ext. inv. IEC S.T. inv. IEC L.T. inv. IEC Def. Time Reserved RI type RD type	-	-	ANSI Def. Time	Time delay curve type for step 4

Table continues on next page

Name	Values (Range)	Unit	Step	Default	Description
Pickup4	1 - 2500	%IB	1	17	Residual current pickup for step 4 in % of IBase
t4	0.000 - 60.000	s	0.001	1.200	Independent (definite) time delay of step 4
TD4	0.05 - 999.00	-	0.01	0.05	Time multiplier for the dependent time delay for step 4
IMin4	1 - 10000	%IB	1	17	Minimum operate current for step 4 in % of IBase
t4Min	0.000 - 60.000	s	0.001	0.000	Minimum operate time in inverse curves step 4
HarmRestrain4	Disabled Enabled	-	-	Enabled	Enable block of step 4 from harmonic restrain

Table 69: EF4PTOC (51N_67N) Non group settings (basic)

Name	Values (Range)	Unit	Step	Default	Description
GlobalBaseSel	1 - 6	-	1	1	Selection of one of the Global Base Value groups
SeqTypeUPol	ZeroSeq NegSeq	-	-	ZeroSeq	Choice of measurand for polarizing voltage
SeqTypeIPol	ZeroSeq NegSeq	-	-	ZeroSeq	Choice of measurand for polarizing current
SeqTypeIDir	ZeroSeq NegSeq	-	-	ZeroSeq	Choice of measurand for directional current

7.4.6 Monitored data

Table 70: EF4PTOC (51N_67N) Monitored data

Name	Type	Values (Range)	Unit	Description
STDIR	INTEGER	0=No direction 1=Forward 2=Reverse 3=Both	-	Fault direction coded as integer
IOp	REAL	-	A	Operating current level
VPol	REAL	-	kV	Polarizing voltage level
IPol	REAL	-	A	Polarizing current level
VPolIang	REAL	-	deg	Angle between polarizing voltage and operating current
IPOLIANG	REAL	-	deg	Angle between polarizing current and operating current
IOPDIR	REAL	-	A	Amplitude of the directional operating quantity

7.4.7 Operation principle

Four step residual overcurrent protection, zero or negative sequence direction EF4PTOC (51N/67N) function has the following four “Analog Inputs” on its function block in the configuration tool:

1. I3P, input used for “Operating Quantity”.
2. V3P, input used for “Voltage Polarizing Quantity”.
3. I3PPOL, input used for “Current Polarizing Quantity”.
4. I3PDIR, input used for “Operating Directional Quantity”.

These inputs are connected from the corresponding pre-processing function blocks in the Configuration Tool within PCM600.

7.4.7.1 Operating quantity within the function

If the function is set to measure zero sequence, it uses Residual Current ($3I_0$) for its operating quantity. The residual current can be:

1. directly measured (when a dedicated CT input of the IED is connected in PCM600 to the fourth analog input of the pre-processing block connected to EF4PTOC (51N/67N) function input I3P). This dedicated IED CT input can be for example, connected to:
   - parallel connection of current instrument transformers in all three phases (Holm-Green connection).
   - one single core balance, current instrument transformer (cable CT).
   - one single current instrument transformer located between power system WYE point and ground (that is, current transformer located in the neutral grounding of a WYE connected transformer winding).
   - one single current instrument transformer located between two parts of a protected object (that is, current transformer located between two WYE points of double WYE shunt capacitor bank).
2. calculated from three-phase current input within the IED (when the fourth analog input into the pre-processing block connected to EF4PTOC (51N/67N) function Analog Input I3P is not connected to a dedicated CT input of the IED in PCM600). In such case the pre-processing block will calculate $3I_0$ from the first three inputs into the pre-processing block by using the following formula (will take I2 from same SMAI AI3P connected to I3PDIR input (same SMAI AI3P connected to I3P input)):

If zero sequence current is selected,

$$I_{op} = 3 \cdot Io = IA + IB + IC$$

(Equation 36)

where:

IA, IB, IC are fundamental frequency phasors of three individual phase currents.

The residual current is pre-processed by a discrete Fourier filter. Thus the phasor of the fundamental frequency component of the residual current is derived. The phasor magnitude is used within the EF4PTOC (51N/67N) protection to compare it with the set operation current value of the four steps (*Pickup1*, *Pickup2*, *Pickup3* or *Pickup4*). If the residual current is larger than the set operation current and the step is used in non-directional mode a signal from the comparator for this step is set to true. This signal will, without delay, activate the output signal PU_STx (x=step 1-4) for this step and a common PICKUP signal.

7.4.7.2 Internal polarizing

A polarizing quantity is used within the protection in order to determine the direction to the ground fault (Forward/Reverse).

The function can be set to use voltage polarizing, current polarizing or dual polarizing.

Voltage polarizing

When voltage polarizing is selected the protection will use either the residual voltage $3V_0$ or the negative sequence voltage V_2 as polarizing quantity V3P.

The residual voltage can be:

1. directly measured (when a dedicated VT input of the IED is connected in PCM600 to the fourth analog input of the pre-processing block connected to EF4PTOC (51N/67N) function input V3P). This dedicated IED VT input shall be then connected to open delta winding of a three phase main VT.
2. calculated from three phase voltage input within the IED (when the fourth analog input into the pre-processing block connected to EF4PTOC (51N/67N) analog function input V3P is NOT connected to a dedicated VT input of the IED in PCM600). In such case the pre-processing block will calculate $3V_0$ from the first three inputs into the pre-processing block by using the following formula:

$$VPol=3V0=(VA+VB+VC)$$

(Equation 38)

where:

VA, VB, VC — are fundamental frequency phasors of three individual phase voltages.

In order to use this, all three phase-to-ground voltages must be connected to three IED VT inputs.

The residual voltage is pre-processed by a discrete fourier filter. Thus, the phasor of the fundamental frequency component of the residual voltage is derived.

The negative sequence voltage is calculated from the three-phase voltage input within the IED by using the pre-processing block. The preprocessing block will calculate the negative sequence voltage from the three inputs into the pre-processing block by using the following formula:

$$VPol = (VA + alpha \cdot VB + alpha \cdot VC)/3$$

(Equation 39)

where:

VA, VB, VC — are fundamental frequency phasors of three individual phase voltages.

alpha — unit phasor with an angle of 120 degrees.

The polarizing phasor is used together with the phasor of the operating directional current, in order to determine the direction to the ground fault (Forward/Reverse). In order to enable voltage polarizing the magnitude of polarizing voltage shall be bigger than a minimum level defined by setting parameter *VpolMin*.

It shall be noted that residual voltage (V_n) or negative sequence voltage (V_2) is used to determine the location of the ground fault. This insures the required inversion of the polarizing voltage within the ground-fault function.

Current polarizing

When current polarizing is selected the function will use an external residual current ($3I_0$) or the calculated negative sequence current (I_2) as polarizing quantity IPol. The user can select the required current.

The residual current can be:

1. directly measured (when a dedicated CT input of the IED is connected in PCM600 to the fourth analog input of the pre-processing block connected to EF4PTOC (51N/67N) function input I3PPOL). This dedicated IED CT input is then typically connected to one single current transformer located between power system WYE

point and ground (current transformer located in the WYE point of a WYE connected transformer winding).

- For some special line protection applications this dedicated IED CT input can be connected to parallel connection of current transformers in all three phases (Holm-Green connection).

2. calculated from three phase current input within the IED (when the fourth analog input into the pre-processing block connected to EF4PTOC (51N/67N) function analog input I3PPOL is NOT connected to a dedicated CT input of the IED in PCM600). In such case the pre-processing block will calculate $3I_0$ from the first three inputs into the pre-processing block by using the following formula:

$$I_{Pol} = 3 \cdot Io = IA + IB + IC$$

(Equation 40)

where:

IA, IB and IC are fundamental frequency phasors of three individual phase currents.

The negative sequence current can be calculated from the three-phase current input within the IED by using the pre-processing block. The pre-processing block will calculate the negative sequence current from the three inputs into the pre-processing block by using the following formula:

$$Ipol = (IA + alpha^2 \cdot IB + alpha \cdot IC)/3$$

(Equation 41)

where:

IA, IB and IC are fundamental frequency phasors of three individual phase currents.

alpha phasor with an angle of 120 degrees.

The polarizing current is pre-processed by a discrete fourier filter. Thus the phasor of the fundamental frequency component of the polarizing current is derived. This phasor is then multiplied with pre-set equivalent zero-sequence source Impedance in order to calculate equivalent polarizing voltage VIPol in accordance with the following formula:

$$V_{IPol} = Zo_S \cdot I_{Pol} = \left(RNPol + j \cdot XNPOL\right) \cdot I_{Pol}$$

(Equation 42)

which will be then used, together with the phasor of the operating directional current, in order to determine the direction to the ground fault (Forward/Reverse).

In order to enable current polarizing the magnitude of polarizing current shall be bigger than a minimum level defined by setting parameter *IPolMin*.

Dual polarizing

When dual polarizing is selected the function will use the vectorial sum of the voltage based and current based polarizing in accordance with the following formula:

$$VTotPol = VVPol + VIPol = VPol + Z_{0s} \cdot IPol = VPol + \left(RNPol + jXNPol\right) \cdot Ipol$$

(Equation 43)

Vpol and Ipol can be either zero sequence component or negative sequence component depending upon the user selection.

Then the phasor of the total polarizing voltage VTotPol will be used, together with the phasor of the operating current, to determine the direction of the ground fault (Forward/ Reverse).

7.4.7.3 Operating directional quantity within the function

The function can take either the residual current or the negative sequence current for its operating directional quantity. The residual current can be:

1. directly measured (when a dedicated CT input of the IED is connected in PCM600 to the fourth analog input of the pre-processing block connected to EF4PTOC (51N/ 67N) function input I3PPOL). This dedicated IED CT input is then typically connected to one single current transformer located between power system WYE point and ground (current transformer located in the WYE point of a WYE connected transformer winding).
   - For some special line protection applications this dedicated IED CT input can be connected to parallel connection of current transformers in all three phases (Holm-Green connection).
2. calculated from three phase current input within the IED (when the fourth analog input into the pre-processing block connected to EF4PTOC (51N/67N) function analog input I3PPOL is NOT connected to a dedicated CT input of the IED in PCM600). In such case the pre-processing block will calculate $3I_0$ from the first three inputs into the pre-processing block by using the following formula:

$$I_{Pol} = 3 \cdot Io = IA + IB + IC$$

(Equation 44)

where:

IA, IB and IC are fundamental frequency phasors of three individual phase currents.

The Negative sequence current can be calculated from the three-phase current input within the IED by using the pre-processing block. The pre-processing block will calculate the negative sequence current from the three inputs into the pre-processing block by using the following formula:

$$I2 = (IA+\alpha^2 \cdot IB+\alpha \cdot IC)/3$$

(Equation 45)

where:

IA, IB and IC	are fundamental frequency phasors of three individual phase currents.
alpha	is 1 with an angle of 120 degrees

This phasor is used together with the phasor of the polarizing quantity in order to determine the direction of the ground fault (Forward/Reverse).

7.4.7.4 External polarizing for ground-fault function

The individual steps within the protection can be set as non-directional. When this setting is selected it is then possible via function binary input BLKn(where x indicates the relevant step within the protection) to provide external directional control (that is, torque control) by for example using one of the following functions if available in the IED:

1. Distance protection directional function.
2. Negative sequence based overcurrent function.

7.4.7.5 Base quantities within the protection

The base quantities are entered as global settings for all functions in the IED. Base current (*IBase*) shall be entered as rated phase current of the protected object in primary amperes. Base voltage (*VBase*) shall be entered as rated phase-to-phase voltage of the protected object in primary kV.

7.4.7.6 Internal ground-fault protection structure

The protection is internally divided into the following parts:

1. Four residual overcurrent steps.
2. Directional supervision element for residual overcurrent steps with integrated directional comparison step for communication based ground-fault protection schemes (permissive or blocking).
3. Second harmonic blocking element with additional feature for sealed-in blocking during switching of parallel transformers.

Each part is described separately in the following sections.

7.4.7.7 Four residual overcurrent steps

Each overcurrent step uses operating quantity Iop (residual current) as measuring quantity. Each of the four residual overcurrent steps has the following built-in facilities:

- Directional mode can be set to *Disabled*/*Non-directional*/*Forward*/*Reverse*. By this parameter setting the directional mode of the step is selected. It shall be noted that the directional decision (Forward/Reverse) is not made within each residual overcurrent step itself. The direction of the fault is determined in a directional element common for all steps.
- Residual current pickup value.
- Type of operating characteristic. By this parameter setting it is possible to select inverse or definitive time delay for step 1 and 4 separately. Step 2 and 3 are always definite time delayed. All of the standard IEC and ANSI inverse characteristics are available. For the complete list of available inverse curves please refer to section "Inverse time characteristics".
- Time delay related settings. By these parameter settings the properties like definite time delay, minimum operating time for inverse curves and reset time delay are defined.
- Supervision by second harmonic blocking feature (*Enabled*/*Disabled*). By this parameter setting it is possible to prevent operation of the step if the second harmonic content in the residual current exceeds the preset level.

Simplified logic diagram for one residual overcurrent step is shown in figure 57.

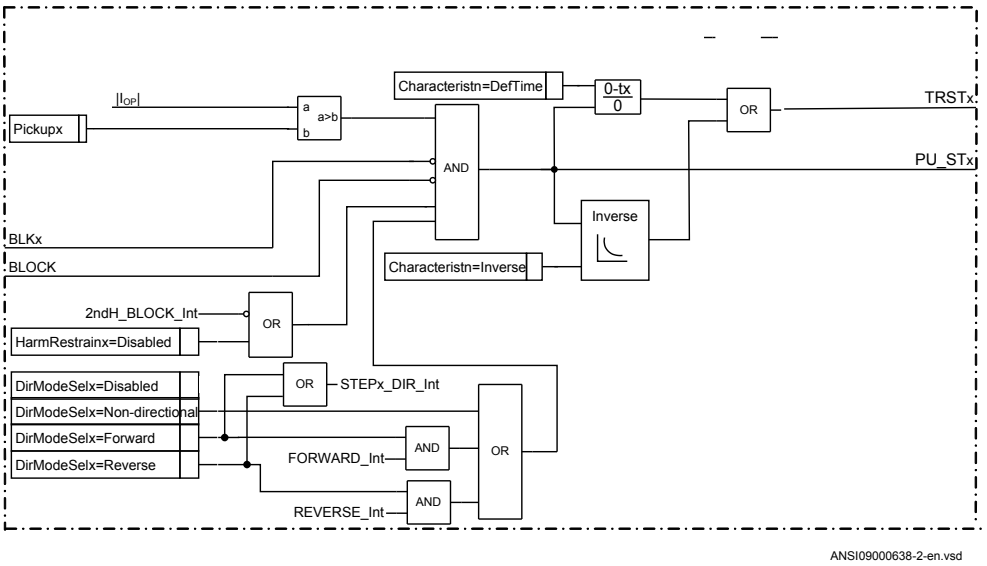

Figure 57: Simplified logic diagram for residual overcurrent

The protection can be completely blocked from the binary input BLOCK. Output signals for respective step, PU_STx and TRSTx and , can be blocked from the binary input BLKn.

7.4.7.8 Directional supervision element with integrated directional comparison function

It shall be noted that at least one of the four residual overcurrent steps shall be set as directional in order to enable execution of the directional supervision element and the integrated directional comparison function.

The protection has integrated directional feature. The operating quantity current `I3PDIR` is always used. The polarizinwcg method is determined by the parameter setting *polMethod*. The polarizing quantity will be selected by the function in one of the following three ways:

1. When *polMethod* = *Voltage*, VPol will be used as polarizing quantity.
2. When *polMethod* = *Current*, IPol will be used as polarizing quantity.
3. When*polMethod* = *Dual*, VPol + IPol · ZNPol will be used as polarizing quantity.

The operating and polarizing quantity are then used inside the directional element, as shown in figure 58, in order to determine the direction of the ground fault.

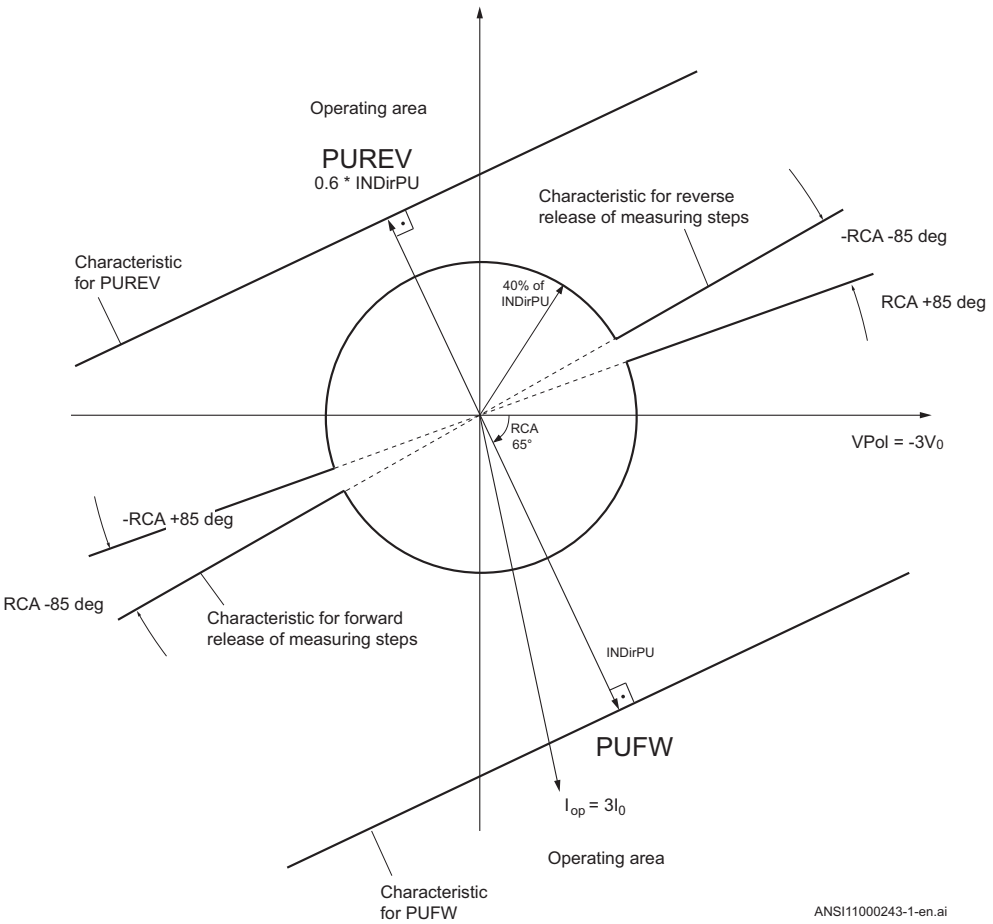

Figure 58: Operating characteristic for ground-fault directional element using the zero sequence components

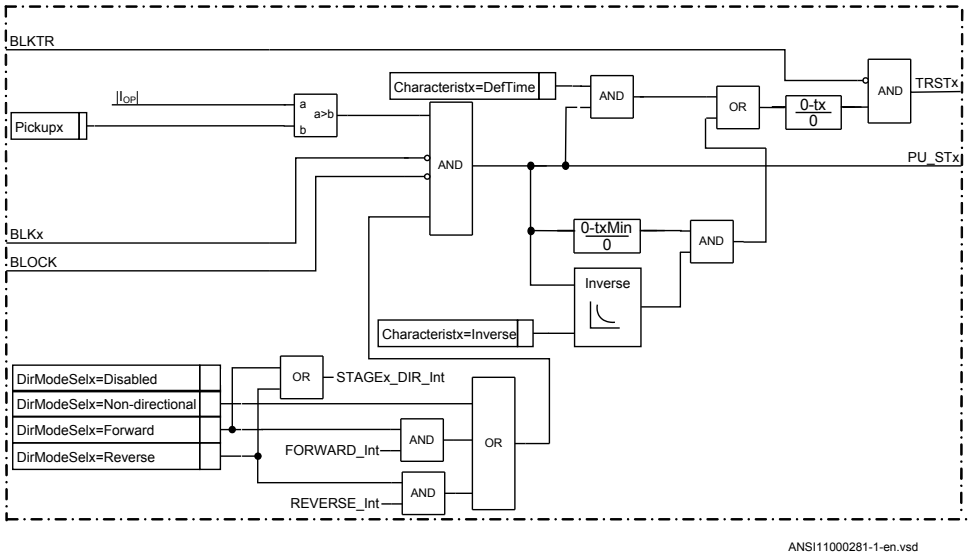

Figure 59: Operating characteristic for ground-fault directional element using the zero sequence components

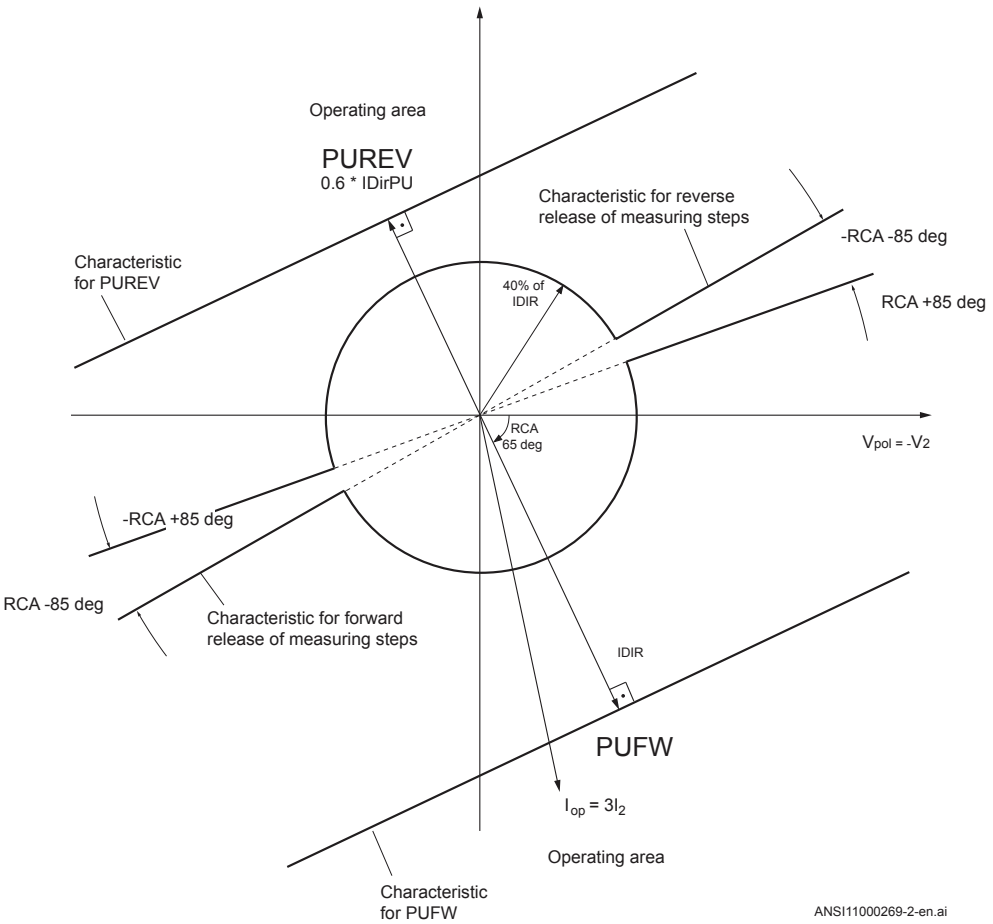

Figure 60: Operating characteristic for ground-fault directional element using the negative sequence components

Two relevant setting parameters for directional supervision element are:

- Directional element will be internally enabled to operate as soon as Iop is bigger than 40% of *IDirPU* and directional condition is fulfilled in set direction.
- Relay characteristic angle *AngleRCA*, which defines the position of forward and reverse areas in the operating characteristic.

Directional comparison step, built-in within directional supervision element, will set EF4PTOC (51N/67N) function output binary signals:

1. PUFW=1 when operating quantity magnitude Iop x cos(φ - *AngleRCA*) is bigger than setting parameter *IDirPU* and directional supervision element detects fault in forward direction.
2. PUREV=1 when operating quantity magnitude Iop x cos(φ - *AngleRCA*) is bigger than 60% of setting parameter *IDirPU* and directional supervision element detects fault in reverse direction.

These signals shall be used for communication based ground-fault teleprotection communication schemes (permissive or blocking).

Simplified logic diagram for directional supervision element with integrated directional comparison step is shown in figure 61:

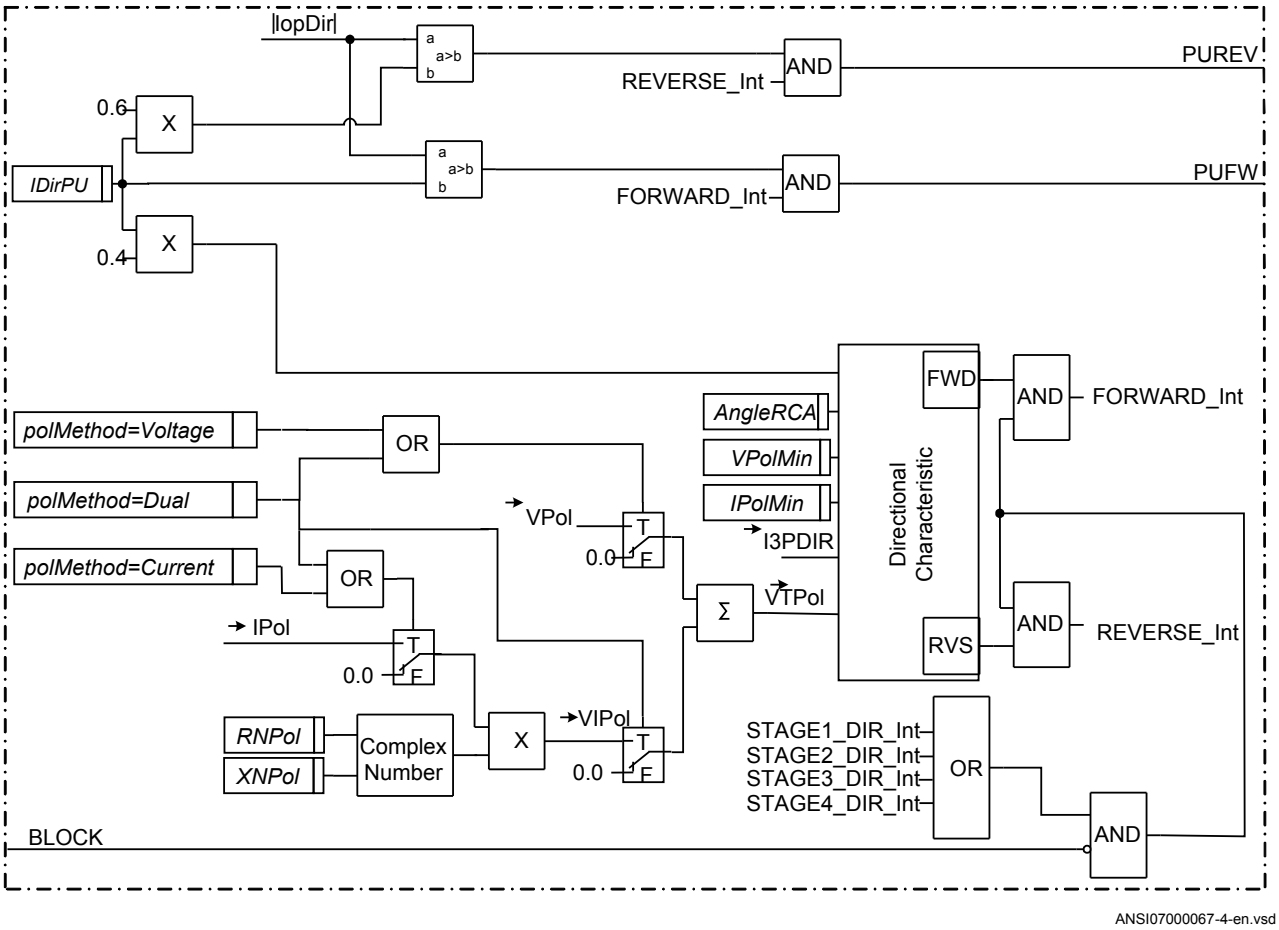

Figure 61: Simplified logic diagram for directional supervision element with integrated directional comparison step

7.4.8 Technical data

Table 71: EF4PTOC (51N/67N) technical data

Function	Range or value	Accuracy
Operate current	(1-2500)% of *IBase*	± 1.0% of I_n at $I < I_n$ ± 1.0% of I at $I > I_n$
Reset ratio	> 95%	-
Operate current for directional comparison, Zero sequence	(1–100)% of *IBase*	± 2.0% of I_n
Operate current for directional comparison, Negative sequence	(1–100)% of *IBase*	± 2.0% of I_n
Min. operating current	(1-10000)% of *IBase*	± 1.0% of I_n at $I < I_n$ ± 1.0% of I at $I > I_n$
Minimum operate time for inverse characteristics	(0.000-60.000) s	± 0.5% ± 25 ms
Timers	(0.000-60.000) s	± 0.5% ±25 ms
Inverse characteristics, see table 480, table 481 and table 482	17 curve types	1) ANSI/IEEE C37.112 IEC 60255–151 ±3% or ±40 ms 0.10 ≤ k ≤ 3.00 1.5 x I_{set} ≤ I ≤ 20 x I_{set}
Minimum polarizing voltage, Zero sequence	(1–100)% of *VBase*	± 0.5% of V_n
Minimum polarizing voltage, Negative sequence	(1–100)% of *VBase*	± 0.5% of V_n
Minimum polarizing current, Zero sequence	(2–100)% of *IBase*	±1.0% of I_n
Minimum polarizing current, Negative sequence	(2–100)% of *IBase*	±1.0% of I_n
Real part of source Z used for current polarization	(0.50-1000.00) Ω/phase	-
Imaginary part of source Z used for current polarization	(0.50–3000.00) Ω/phase	-
Operate time, non-directional pickup function	30 ms typically at 0.5 to 2 x I_{set}	-
Reset time, non-directional pickup function	30 ms typically at 2 to 0.5 x I_{set}	-
Operate time, directional pickup function	30 ms typically at 0,5 to 2 x I_N	-
Reset time, directional pickup function	30 ms typically at 2 to 0,5 x I_N	-
1) **Note:** Timing accuracy only valid when 2nd harmonic blocking is turned off.		

7.5 Thermal overload protection, two time constants TRPTTR (49)

7.5.1 Identification

Function description	IEC 61850 identification	IEC 60617 identification	ANSI/IEEE C37.2 device number
Thermal overload protection, two time constants	TRPTTR		49

7.5.2 Functionality

If a power transformer or generator reaches very high temperatures the equipment might be damaged. The insulation within the transformer/generator will have forced ageing. As a consequence of this the risk of internal phase-to-phase or phase-to-ground faults will increase. High temperature will degrade the quality of the transformer/generator insulation.

The thermal overload protection estimates the internal heat content of the transformer/generator (temperature) continuously. This estimation is made by using a thermal model of the transformer/generator with two time constants, which is based on current measurement.

Two warning pickup levels are available. This enables actions in the power system to be done before dangerous temperatures are reached. If the temperature continues to increase to the trip value, the protection initiates a trip of the protected transformer/generator.

7.5.3 Function block

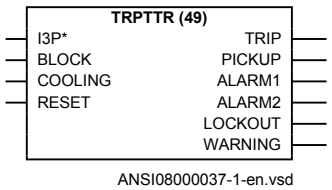

Figure 62: TRPTTR (49) function block

7.5.4 Signals

TRPTTR is not provided with external temperature sensor in first release of 650 series. The only input that influences the temperature measurement is the binary input COOLING.

Table 72: TRPTTR (49) Input signals

Name	Type	Default	Description
I3P	GROUP SIGNAL	-	Three phase group signal for current input
BLOCK	BOOLEAN	0	Block of function
COOLING	BOOLEAN	0	Cooling input changes IBase setting and time constant
RESET	BOOLEAN	0	Reset of function

Table 73: TRPTTR (49) Output signals

Name	Type	Description
TRIP	BOOLEAN	Trip Signal
PICKUP	BOOLEAN	Pickup signal
ALARM1	BOOLEAN	First level alarm signal
ALARM2	BOOLEAN	Second level alarm signal
LOCKOUT	BOOLEAN	Lockout signal
WARNING	BOOLEAN	Trip within set warning time

7.5.5 Settings

Table 74: TRPTTR (49) Group settings (basic)

Name	Values (Range)	Unit	Step	Default	Description
Operation	Disabled Enabled	-	-	Disabled	Disable/Enable Operation
IRef	10.0 - 1000.0	%IB	1.0	100.0	Reference current in % of IBase
IBase1	30.0 - 250.0	%IB	1.0	100.0	Base current IBase1 without cooling input in % of IBase
IBase2	30.0 - 250.0	%IB	1.0	100.0	Base current IBase2 with cooling input in % of IBase
Tau1	1.0 - 500.0	Min	1.0	60.0	Time constant without cooling input
Tau2	1.0 - 500.0	Min	1.0	60.0	Time constant with cooling input
IHighTau1	30.0 - 250.0	%IB1	1.0	100.0	Current setting for rescaling TC1 by TC1-IHIGH

Table continues on next page

Name	Values (Range)	Unit	Step	Default	Description
Tau1High	5 - 2000	%tC1	1	100	Multiplier to TC1 when current is >IHIGH-TC1
ILowTau1	30.0 - 250.0	%IB1	1.0	100.0	Current setting for rescaling TC1 by TC1-ILOW
Tau1Low	5 - 2000	%tC1	1	100	Multiplier to TC1 when current is <ILOW-TC1
IHighTau2	30.0 - 250.0	%IB2	1.0	100.0	Current setting for rescaling TC2 by TC2-IHIGH
Tau2High	5 - 2000	%tC2	1	100	Multiplier to TC2 when current is >TC2-IHIGH
ILowTau2	30.0 - 250.0	%IB2	1.0	100.0	Current setting for rescaling TC2 by TC2-ILOW
Tau2Low	5 - 2000	%tC2	1	100	Multiplier to TC2 when current is <ILOW-TC2
ITrip	50.0 - 250.0	%IBx	1.0	110.0	Steady state operate current level
Alarm1	50.0 - 99.0	%Itr	1.0	80.0	First alarm level
Alarm2	50.0 - 99.0	%Itr	1.0	90.0	Second alarm level
LockoutReset	10.0 - 95.0	%Itr	1.0	60.0	Lockout reset level
Warning	1.0 - 500.0	Min	0.1	30.0	Time setting, below which warning would be set

Table 75: TRPTTR (49) Non group settings (basic)

Name	Values (Range)	Unit	Step	Default	Description
GlobalBaseSel	1 - 6	-	1	1	Selection of one of the Global Base Value groups

7.5.6 Monitored data

Table 76: TRPTTR (49) Monitored data

Name	Type	Values (Range)	Unit	Description
TTRIP	REAL	-	-	Estimated time to trip (in min)
TTRIPCAL	INTEGER	-	-	Calculated time status to trip: not active/long time/active
TRESCAL	INTEGER	-	-	Calculated time status to reset: not active/long time/ active
TRESLO	REAL	-	-	Estimated time to reset of the function (in min)
HEATCONT	REAL	-	%	Percentage of the heat content of the transformer
I-MEASUR	REAL	-	%	Current measured by the function in % of the rated current

7.5.7 Operation principle

The sampled analog phase currents are pre-processed and for each phase current the true RMS value of each phase current is derived. These phase current values are fed to the Thermal overload protection, two time constants (TRPTTR, 49).

From the largest of the three phase currents a relative final temperature (heat content) is calculated according to the expression:

$$\Theta_{final} = \left(\frac{I}{I_{ref}} \right)^2$$

(Equation 46)

where:

I	is the largest phase current
I_{ref}	is a given reference current

If this calculated relative temperature is larger than the relative temperature level corresponding to the set operate (trip) current a pickup output signal PICKUP is activated.

The actual temperature at the actual execution cycle is calculated as:

If $\Theta_{final} > \Theta_n$

(Equation 47)

$$\Theta_n = \Theta_{n-1} + \left(\Theta_{final} - \Theta_{n-1} \right) \cdot \left(1 - e^{-\frac{\Delta t}{\tau}} \right)$$

(Equation 48)

If $\Theta_{final} < \Theta_n$

(Equation 49)

$$\Theta_n = \Theta_{final} - \left(\Theta_{final} - \Theta_{n-1} \right) \cdot e^{-\frac{\Delta t}{\tau}}$$

(Equation 50)

where:

Θ_n	is the calculated present temperature

Table continues on next page

Θ_{n-1}	is the calculated temperature at the previous time step
Θ_{final}	is the calculated final (steady state) temperature with the actual current
Δt	is the time step between calculation of the actual and final temperature
τ	is the set thermal time constant Tau1 or Tau2 for the protected transformer

The calculated transformer relative temperature can be monitored as it is exported from the function as a real figure HEATCONT.

When the transformer temperature reaches any of the set alarm levels *Alarm1* or *Alarm2* the corresponding output signals ALARM1 or ALARM2 are activated. When the temperature of the object reaches the set trip level which corresponds to continuous current equal to *ITrip* the output signal TRIP is activated.

There is also a calculation of the present time to operation with the present current. This calculation is only performed if the final temperature is calculated to be above the operation temperature:

$$t_{operate} = -\tau \cdot \ln\left(\frac{\Theta_{final} - \Theta_{operate}}{\Theta_{final} - \Theta_{n}}\right)$$

(Equation 51)

The calculated time to trip can be monitored as it is exported from the function as a real figure TTRIP.

After a trip, caused by the thermal overload protection, there can be a lockout to reconnect the tripped circuit. The output lockout signal LOCKOUT is activated when the temperature of the object is above the set lockout release temperature setting *ResLo*.

The time to lockout release is calculated, That is, a calculation of the cooling time to a set value.

$$t_{lockout\_release} = -\tau \cdot \ln\left(\frac{\Theta_{final} - \Theta_{lockout\_release}}{\Theta_{final} - \Theta_{n}}\right)$$

(Equation 52)

In the above equation, the final temperature is calculated according to equation 46. Since the transformer normally is disconnected, the current I is zero and thereby the Θ_{final} is also zero. The calculated component temperature can be monitored as it is exported from the function as a real figure, TRESLO.

When the current is so high that it has given a pickup signal PICKUP, the estimated time to trip is continuously calculated and given as analog output TTRIP. If this calculated time get less than the setting time Warning, set in minutes, the output WARNING is activated.

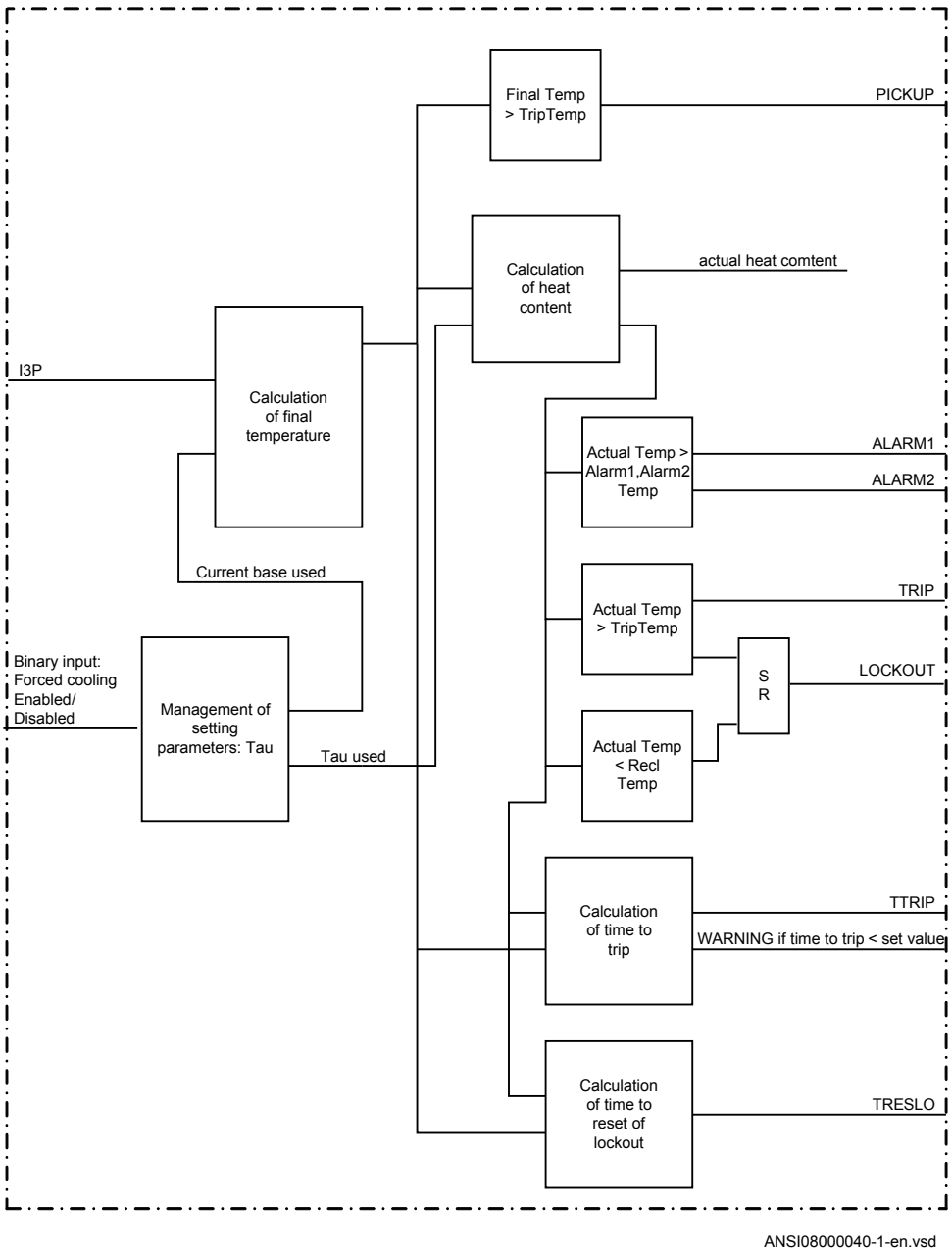

Figure 63: Functional overview of TRPTTR (49)

7.5.8 Technical data

Table 77: TRPTTR (49) technical data

Function	Range or value	Accuracy
Base current 1 and 2	(30–250)% of *IBase*	± 1.0% of I_n
Operate time: $t = \tau \cdot \ln\left(\frac{I^2 - I_p^{\,2}}{I^2 - I_b^{\,2}}\right)$ (Equation 53) I = $I_{measured}$	I_p = load current before overload occurs Time constant τ = (1–500) minutes	IEC 60255–8, ±5% + 200 ms
Alarm pickup 1 and 2	(50–99)% of heat content trip value	± 2.0% of heat content trip
Operate current	(50–250)% of *IBase*	± 1.0% of I_n
Reset level temperature	(10–95)% of heat content trip	± 2.0% of heat content trip

7.6 Breaker failure protection 3-phase activation and output CCRBRF (50BF)

7.6.1 Identification

Function description	IEC 61850 identification	IEC 60617 identification	ANSI/IEEE C37.2 device number
Breaker failure protection, 3-phase activation and output	CCRBRF	*3I>BF*	50BF

7.6.2 Functionality

CCRBRF (50BF) can be current based, contact based, or an adaptive combination of these two conditions.

Breaker failure protection (CCRBRF, 50BF) ensures fast back-up tripping of surrounding breakers in case the protected breaker fails to open. CCRBRF (50BF) can be current based, contact based, or an adaptive combination of these two conditions.

Current check with extremely short reset time is used as check criterion to achieve high security against unnecessary operation.

Contact check criteria can be used where the fault current through the breaker is small.

Breaker failure protection, 3-phase activation and output (CCRBRF, 50BF) current criteria can be fulfilled by one or two phase currents the residual current, or one phase current plus residual current. When those currents exceed the user defined settings, the function is triggered. These conditions increase the security of the back-up trip command.

CCRBRF (50BF) function can be programmed to give a three-phase re-trip of the protected breaker to avoid unnecessary tripping of surrounding breakers.

7.6.3 Function block

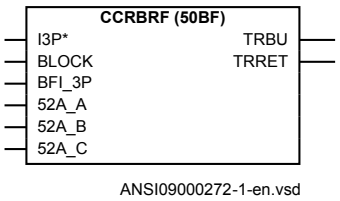

Figure 64: CCRBRF (50BF) function block

7.6.4 Signals

Table 78: CCRBRF (50BF) Input signals

Name	Type	Default	Description
I3P	GROUP SIGNAL	-	Three phase group signal for current inputs
BLOCK	BOOLEAN	0	Block of function
BFI_3P	BOOLEAN	0	Three phase breaker failure initiation
52a_A	BOOLEAN	1	Circuit breaker closed in phase A
52a_B	BOOLEAN	1	Circuit breaker closed in phase B
52a_C	BOOLEAN	1	Circuit breaker closed in phase C

Table 79: CCRBRF (50BF) Output signals

Name	Type	Description
TRBU	BOOLEAN	Back-up trip by breaker failure protection function
TRRET	BOOLEAN	Retrip by breaker failure protection function

7.6.5 Settings

Table 80: CCRBRF (50BF) Group settings (basic)

Name	Values (Range)	Unit	Step	Default	Description
Operation	Disabled Enabled	-	-	Disabled	Disable/Enable Operation
FunctionMode	Current Contact Current&Contact	-	-	Current	Detection principle for back-up trip
BuTripMode	2 out of 4 1 out of 3 1 out of 4	-	-	1 out of 3	Back-up trip mode
RetripMode	Retrip Off CB Pos Check No CBPos Check	-	-	Retrip Off	Operation mode of re-trip logic
Pickup_PH	5 - 200	%IB	1	10	Phase current pickup in % of IBase
Pickup_N	2 - 200	%IB	1	10	Operate residual current level in % of IBase
t1	0.000 - 60.000	s	0.001	0.000	Time delay of re-trip
t2	0.000 - 60.000	s	0.001	0.150	Time delay of back-up trip

Table 81: CCRBRF (50BF) Group settings (advanced)

Name	Values (Range)	Unit	Step	Default	Description
Pickup_BlkCont	5 - 200	%IB	1	20	Current for blocking of 52a operation in % of Ibase

Table 82: CCRBRF (50BF) Non group settings (basic)

Name	Values (Range)	Unit	Step	Default	Description
GlobalBaseSel	1 - 6	-	1	1	Selection of one of the Global Base Value groups

7.6.6 Monitored data

Table 83: CCRBRF (50BF) Monitored data

Name	Type	Values (Range)	Unit	Description
I_A	REAL	-	A	Measured current in phase A
I_B	REAL	-	A	Measured current in phase B
I_C	REAL	-	A	Measured current in phase C
IN	REAL	-	A	Measured residual current

7.6.7 Operation principle

Breaker failure protection, 3-phase activation and output CCRBRF (50BF) is initiated from protection trip command, either from protection functions within the IED or from external protection devices.

The initiate signal is general for all three phases. A re-trip attempt can be made after a set time delay. The re-trip function can be done with or without CB position check based on current and/or contact evaluation. With the current check the re-trip is only performed if the current through the circuit breaker is larger than the operate current level. With contact check the re-trip is only performed if breaker is indicated as closed.

The initiate signal can be an internal or external protection trip signal. This signal will initiate the back-up trip timer. If the opening of the breaker is successful this is detected by the function, by detection of either low current through RMS evaluation and a special adapted current algorithm or by open contact indication. The special algorithm enables a very fast detection of successful breaker opening, that is, fast resetting of the current measurement. If the current and/or contact detection has not detected breaker opening before the back-up timer has run its time a back-up trip is initiated.

Further the following possibilities are available:

- In the current detection it is possible to use three different options: *1 out of 3* where it is sufficient to detect failure to open (high current) in one pole, *1 out of 4* where it is sufficient to detect failure to open (high current) in one pole or high residual current and *2 out of 4* where at least two current (phase current and/or residual current) shall be high for breaker failure detection.
- The current detection level for the residual current can be set different from the setting of phase current detection.
- Back-up trip is always made with current or contact check. It is possible to have this option activated for small load currents only.

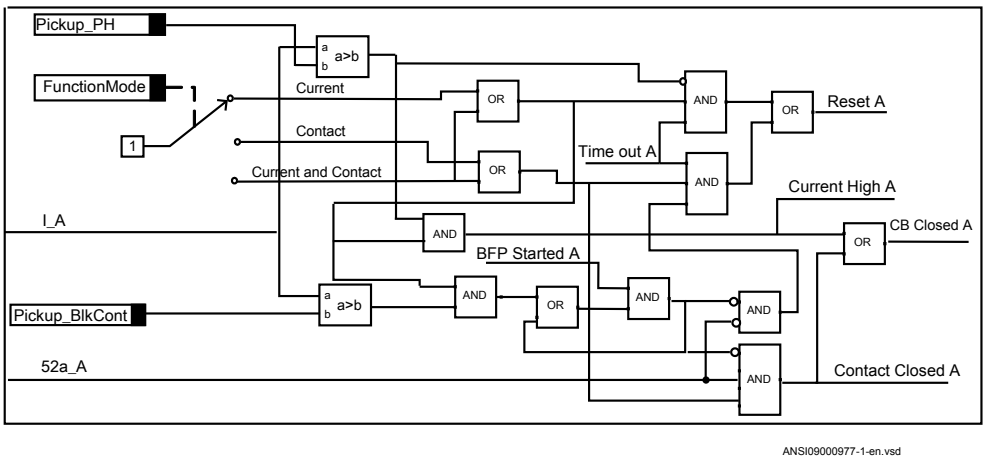

Figure 65: Simplified logic scheme of the CCRBRF (50BF), CB position evaluation

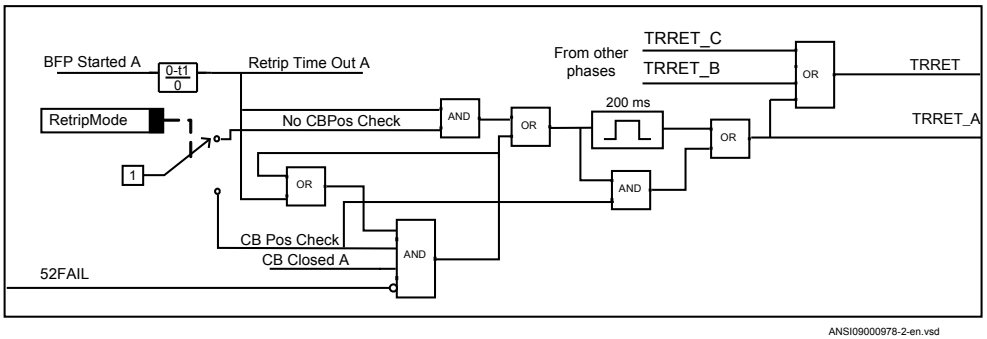

Figure 66: Simplified logic scheme of the retrip logic function

Internal logical signals PU_A, PU_B, PU_C have logical value 1 when current in respective phase has magnitude larger than setting parameter *Pickup_PH*.

7.6.8 Technical data

Table 84: CCRBRF (50BF) technical data

Function	Range or value	Accuracy
Operate phase current	(5-200)% of *IBase*	± 1.0% of I_n at $I \leq I_n$ ± 1.0% of I at $I > I_n$
Reset ratio, phase current	> 95%	-
Operate residual current	(2-200)% of *IBase*	± 1.0% of I_n at $I \leq I_n$ ± 1.0% of I at $I > I_n$
Reset ratio, residual current	> 95%	-
Table continues on next page		

Function	Range or value	Accuracy
Phase current pickup for blocking of contact function	(5-200)% of *IBase*	± 1.0% of I_n at $I \leq I_n$ ± 1.0% of I at $I > I_n$
Reset ratio	> 95%	-
Timers	(0.000-60.000) s	± 0.5% ±10 ms
Operate time for current detection	35 ms typically	-
Reset time for current detection	10 ms maximum	-

7.7 Pole discrepancy protection CCRPLD (52PD)

7.7.1 Identification

Function description	IEC 61850 identification	IEC 60617 identification	ANSI/IEEE C37.2 device number
Pole discrepancy protection	CCRPLD	*PD*	52PD

7.7.2 Functionality

Circuit breakers and disconnectors can end up with their phases in different positions (close-open), due to electrical or mechanical failures. An open phase can cause negative and zero sequence currents which cause thermal stress on rotating machines and can cause unwanted operation of zero sequence or negative sequence current functions.

Normally the affected breaker is tripped to correct such a situation. If the situation warrants the surrounding breakers should be tripped to clear the unsymmetrical load situation.

The pole discrepancy function operates based on information from the circuit breaker logic with additional criteria from unsymmetrical phase currents when required.

7.7.3 Function block

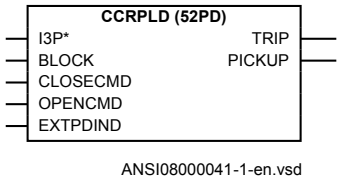

Figure 67: CCRPLD (52PD) function block

7.7.4 Signals

Table 85: CCRPLD (52PD) Input signals

Name	Type	Default	Description
I3P	GROUP SIGNAL	-	Three phase group signal for current inputs
BLOCK	BOOLEAN	0	Block of function
CLOSECMD	BOOLEAN	0	Close command to CB
OPENCMD	BOOLEAN	0	Open command to CB
EXTPDIND	BOOLEAN	0	Pole discrepancy signal from CB logic

Table 86: CCRPLD (52PD) Output signals

Name	Type	Description
TRIP	BOOLEAN	Trip signal to CB
PICKUP	BOOLEAN	Trip condition TRUE, waiting for time delay

7.7.5 Settings

Table 87: CCRPLD (52PD) Group settings (basic)

Name	Values (Range)	Unit	Step	Default	Description
Operation	Disabled Enabled	-	-	Disabled	Disable/Enable Operation
tTrip	0.000 - 60.000	s	0.001	0.300	Time delay between trip condition and trip signal
ContactSel	Disabled PD signal from CB	-	-	Disabled	Contact function selection

Table continues on next page

Name	Values (Range)	Unit	Step	Default	Description
CurrentSel	Disabled CB oper monitor Continuous monitor	-	-	Disabled	Current function selection
CurrUnsymPU	0 - 100	%	1	80	Unsym magn of lowest phase current compared to the highest.
CurrRelPU	0 - 100	%IB	1	10	Current magnitude for release of the function in % of IBase

Table 88: CCRPLD (52PD) Non group settings (basic)

Name	Values (Range)	Unit	Step	Default	Description
GlobalBaseSel	1 - 6	-	1	1	Selection of one of the Global Base Value groups

7.7.6 Monitored data

Table 89: CCRPLD (52PD) Monitored data

Name	Type	Values (Range)	Unit	Description
IMin	REAL	-	A	Lowest phase current
IMax	REAL	-	A	Highest phase current

7.7.7 Operation principle

The detection of pole discrepancy can be made in two different ways. If the contact based function is used an external logic can be made by connecting the auxiliary contacts of the circuit breaker so that a pole discrepancy is indicated, see figure 68.

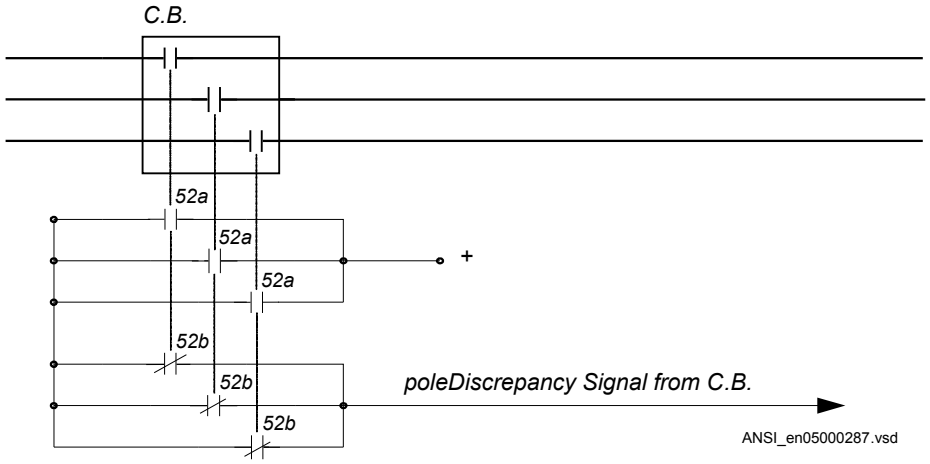

Figure 68: Pole discrepancy external detection logic

This binary signal is connected to a binary input of the IED. The appearance of this signal will start a timer that will give a trip signal after the set time delay.

Pole discrepancy can also be detected by means of phase selective current measurement. The sampled analog phase currents are pre-processed in a discrete Fourier filter (DFT) block. From the fundamental frequency components of each phase current the RMS value of each phase current is derived. The smallest and the largest phase current are derived. If the smallest phase current is lower than the setting *CurrUnsymPU* times the largest phase current the settable trip timer (*tTrip*) is started. The *tTrip* timer gives a trip signal after the set delay. The TRIP signal is a pulse 150 ms long. The current based pole discrepancy function can be set to be active either continuously or only directly in connection to breaker open or close command.

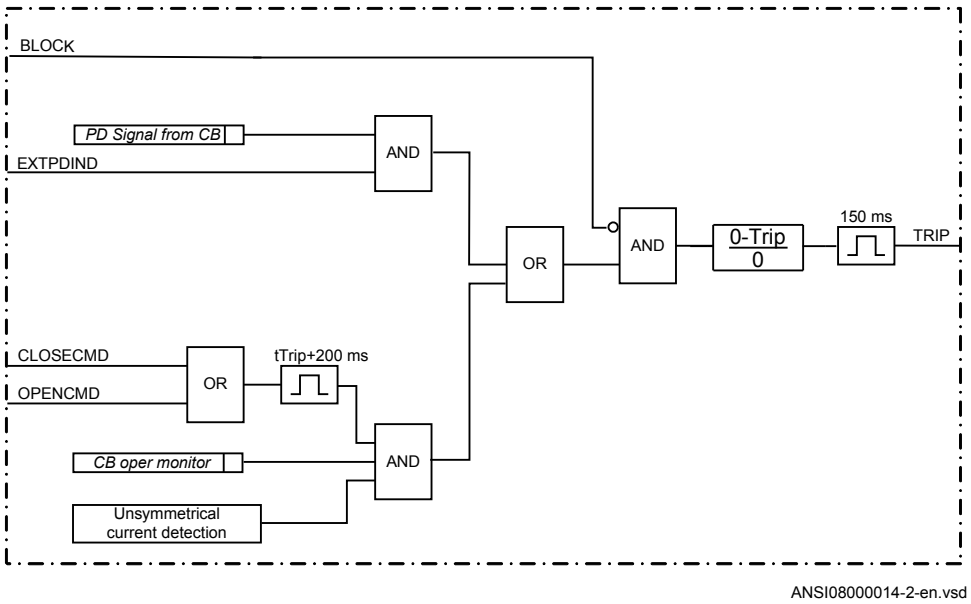

Figure 69: Simplified block diagram of pole discrepancy function - contact and current based

The pole discrepancy protection is blocked if the input signal BLOCK is high.

The BLOCK signal is a general purpose blocking signal of the pole discrepancy protection. It can be connected to a binary input in the IED in order to receive a block command from external devices or can be software connected to other internal functions in the IED itself in order to receive a block command from internal functions. Through OR gate it can be connected to both binary inputs and internal function outputs.

If the pole discrepancy protection is enabled, then two different criteria can generate a trip signal TRIP:

- Pole discrepancy signaling from the circuit breaker.
- Unsymmetrical current detection.

7.7.7.1 Pole discrepancy signaling from circuit breaker

If one or two poles of the circuit breaker have failed to open or to close (pole discrepancy status), then the function input EXTPDIND is activated from the pole discrepancy signal in figure 68. After a settable time *tTrip*, a 150 ms trip pulse command TRIP is generated by the pole discrepancy protection.

7.7.7.2 Unsymmetrical current detection

Unsymmetrical current indicated if:

- any phase current is lower than *CurrUnsymPU* of the highest current in the three phases.
- the highest phase current is greater than *CurrRelPU* of *IBase*.

If these conditions are true, an unsymmetrical condition is detected. This detection is enabled to generate a trip after a set time delay *tTrip* if the detection occurs in the next 200 ms after the circuit breaker has received a command to open trip or close and if the unbalance persists. The 200 ms limitation is for avoiding unwanted operation during unsymmetrical load conditions.

The pole discrepancy protection is informed that a trip or close command has been given to the circuit breaker through the inputs CLOSECMD (for closing command information) and OPENCMD (for opening command information). These inputs can be connected to terminal binary inputs if the information are generated from the field (that is from auxiliary contacts of the close and open push buttons) or may be software connected to the outputs of other integrated functions (that is close command from a control function or a general trip from integrated protections).

7.7.8 Technical data

Table 90: CCRPLD (52PD) technical data

Function	Range or value	Accuracy
Operate value, current asymmetry level	(0-100) %	± 1.0% of I_n
Reset ratio	>95%	-
Time delay	(0.000-60.000) s	± 0.5% ± 25 ms

7.8 Directional over-/under-power protection GOPPDOP/ GUPPDUP (32/37)

7.8.1 Functionality

The directional over-/under-power protection GOPPDOP (32)/GUPPDUP (37) can be used wherever a high/low active, reactive or apparent power protection or alarming is required. The functions can alternatively be used to check the direction of active or

reactive power flow in the power system. There are a number of applications where such functionality is needed. Some of them are:

- detection of reversed active power flow
- detection of high reactive power flow

Each function has two steps with definite time delay. Reset times for both steps can be set as well.

7.8.2 Directional overpower protection GOPPDOP (32)

7.8.2.1 Identification

Function description	IEC 61850 identification	IEC 60617 identification	ANSI/IEEE C37.2 device number
Directional overpower protection	GOPPDOP	P > →	32

7.8.2.2 Function block

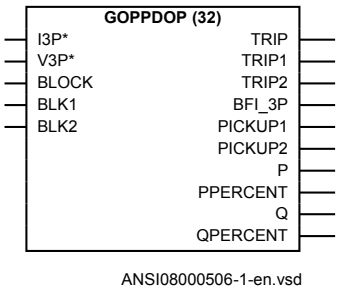

Figure 70: GOPPDOP (32) function block

7.8.2.3 Signals

Table 91: GOPPDOP (32) Input signals

Name	Type	Default	Description
I3P	GROUP SIGNAL	-	Three phase group signal for current inputs
V3P	GROUP SIGNAL	-	Three phase group signal for voltage inputs
BLOCK	BOOLEAN	0	Block of function
BLK1	BOOLEAN	0	Block of step 1
BLK2	BOOLEAN	0	Block of step 2

Table 92: GOPPDOP (32) Output signals

Name	Type	Description
TRIP	BOOLEAN	Common trip signal
TRIP1	BOOLEAN	Trip signal from stage 1
TRIP2	BOOLEAN	Trip signal from stage 2
BFI_3P	BOOLEAN	General pickup signal
PICKUP1	BOOLEAN	Pickup signal from stage 1
PICKUP2	BOOLEAN	Pickup signal from stage 2
P	REAL	Active Power
PPERCENT	REAL	Active power in % of calculated power base value
Q	REAL	Reactive power
QPERCENT	REAL	Reactive power in % of calculated power base value

7.8.2.4 Settings

Table 93: GOPPDOP (32) Group settings (basic)

Name	Values (Range)	Unit	Step	Default	Description
Operation	Disabled Enabled	-	-	Disabled	Operation Disable / Enable
OpMode1	Disabled OverPower	-	-	OverPower	Operation mode 1
Power1	0.0 - 500.0	%	0.1	1.0	Power setting for stage 1 in % of calculated power base value
Angle1	-180.0 - 180.0	Deg	0.1	0.0	Characteristic angle for stage 1
TripDelay1	0.010 - 6000.000	s	0.001	1.000	Trip delay for stage 1
OpMode2	Disabled OverPower	-	-	OverPower	Operation mode 2

Table continues on next page

Name	Values (Range)	Unit	Step	Default	Description
Power2	0.0 - 500.0	%	0.1	1.0	Power setting for stage 2 in % of calculated power base value
Angle2	-180.0 - 180.0	Deg	0.1	0.0	Characteristic angle for stage 2
TripDelay2	0.010 - 6000.000	s	0.001	1.000	Trip delay for stage 2

Table 94: GOPPDOP (32) Group settings (advanced)

Name	Values (Range)	Unit	Step	Default	Description
k	0.00 - 0.99	-	0.01	0.00	Low pass filter coefficient for power measurement, V and I

Table 95: GOPPDOP (32) Non group settings (basic)

Name	Values (Range)	Unit	Step	Default	Description
GlobalBaseSel	1 - 6	-	1	1	Selection of one of the Global Base Value groups
Mode	A, B, C Arone Pos Seq AB BC CA A B C	-	-	Pos Seq	Mode of measurement for current and voltage

7.8.2.5 Monitored data

Table 96: GOPPDOP (32) Monitored data

Name	Type	Values (Range)	Unit	Description
P	REAL	-	MW	Active Power
PPERCENT	REAL	-	%	Active power in % of calculated power base value
Q	REAL	-	MVAr	Reactive power
QPERCENT	REAL	-	%	Reactive power in % of calculated power base value

7.8.3 Directional underpower protection GUPPDUP (37)

7.8.3.1 Identification

Function description	IEC 61850 identification	IEC 60617 identification	ANSI/IEEE C37.2 device number
Directional underpower protection	GUPPDUP	P < →	37

7.8.3.2 Function block

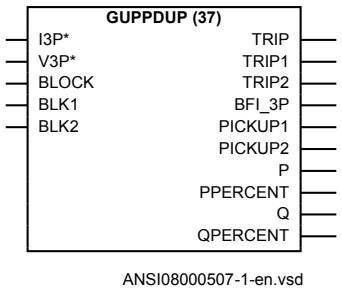

Figure 71: GUPPDUP (37) function block

7.8.3.3 Signals

Table 97: GUPPDUP (37) Input signals

Name	Type	Default	Description
I3P	GROUP SIGNAL	-	Three phase group signal for current inputs
V3P	GROUP SIGNAL	-	Three phase group signal for voltage inputs
BLOCK	BOOLEAN	0	Block of function
BLK1	BOOLEAN	0	Block of step 1
BLK2	BOOLEAN	0	Block of step 2

Table 98: GUPPDUP (37) Output signals

Name	Type	Description
TRIP	BOOLEAN	Common trip signal
TRIP1	BOOLEAN	Trip signal from stage 1
TRIP2	BOOLEAN	Trip signal from stage 2
BFI_3P	BOOLEAN	General pickup signal

Table continues on next page

Name	Type	Description
PICKUP1	BOOLEAN	Pickup signal from stage 1
PICKUP2	BOOLEAN	Pickup signal from stage 2
P	REAL	Active Power
PPERCENT	REAL	Active power in % of calculated power base value
Q	REAL	Reactive power
QPERCENT	REAL	Reactive power in % of calculated power base value

7.8.3.4 Settings

Table 99: GUPPDUP (37) Group settings (basic)

Name	Values (Range)	Unit	Step	Default	Description
Operation	Disabled Enabled	-	-	Disabled	Operation Disable / Enable
OpMode1	Disabled UnderPower	-	-	UnderPower	Operation mode 1
Power1	0.0 - 500.0	%	0.1	1.0	Power setting for stage 1 in % of calculated power base value
Angle1	-180.0 - 180.0	Deg	0.1	0.0	Characteristic angle for stage 1
TripDelay1	0.010 - 6000.000	s	0.001	1.000	Trip delay for stage 1
OpMode2	Disabled UnderPower	-	-	UnderPower	Operation mode 2
Power2	0.0 - 500.0	%	0.1	1.0	Power setting for stage 2 in % of calculated power base value
Angle2	-180.0 - 180.0	Deg	0.1	0.0	Characteristic angle for stage 2
TripDelay2	0.010 - 6000.000	s	0.001	1.000	Trip delay for stage 2

Table 100: GUPPDUP (37) Group settings (advanced)

Name	Values (Range)	Unit	Step	Default	Description
TD	0.00 - 0.99	-	0.01	0.00	Low pass filter coefficient for power measurement, V and I

Table 101: GUPPDUP (37) Non group settings (basic)

Name	Values (Range)	Unit	Step	Default	Description
GlobalBaseSel	1 - 6	-	1	1	Selection of one of the Global Base Value groups
Mode	A, B, C Arone Pos Seq AB BC CA A B C	-	-	Pos Seq	Mode of measurement for current and voltage

7.8.3.5 Monitored data

Table 102: GUPPDUP (37) Monitored data

Name	Type	Values (Range)	Unit	Description
P	REAL	-	MW	Active Power
PPERCENT	REAL	-	%	Active power in % of calculated power base value
Q	REAL	-	MVAr	Reactive power
QPERCENT	REAL	-	%	Reactive power in % of calculated power base value

7.8.4 Operation principle

A simplified scheme showing the principle of the power protection function is shown in figure 72. The function has two stages with individual settings.

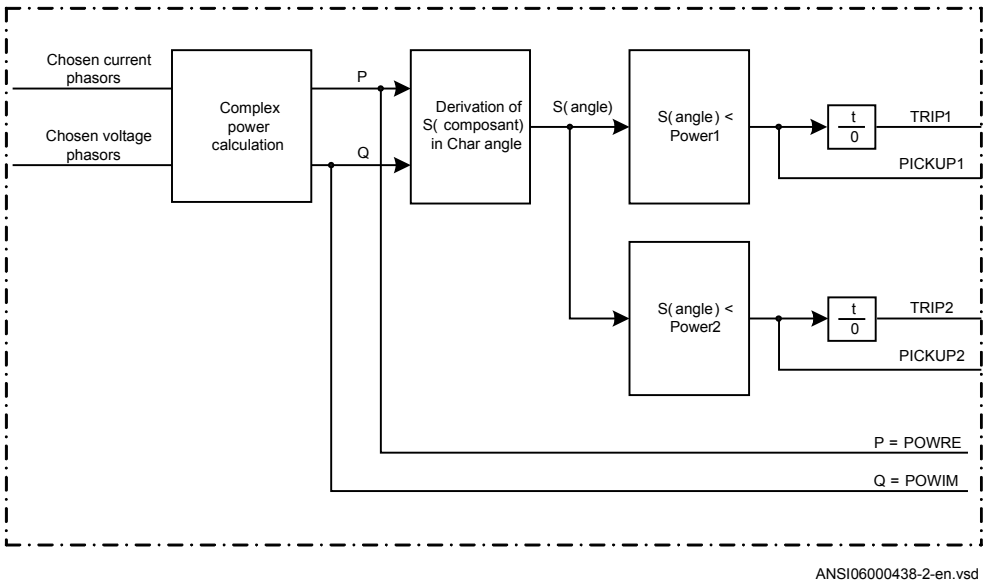

Figure 72: Simplified logic diagram of the power protection function

The function will use voltage and current phasors calculated in the pre-processing blocks. The apparent complex power is calculated according to chosen formula as shown in table 103.

Table 103: Complex power calculation

Set value: *Mode*	Formula used for complex power calculation
A, B, C	$\bar{S} = \bar{V}_A \cdot \bar{I}_A^{\,*} + \bar{V}_B \cdot \bar{I}_B^{\,*} + \bar{V}_C \cdot \bar{I}_C^{\,*}$ (Equation 54)
Arone	$\bar{S} = \bar{V}_{AB} \cdot \bar{I}_A^{\,*} - \bar{V}_{BC} \cdot \bar{I}_C^{\,*}$ (Equation 55)
PosSeq	$\bar{S} = 3 \cdot \bar{V}_{PosSeq} \cdot \bar{I}_{PosSeq}^{\,*}$ (Equation 56)
AB	$\bar{S} = \bar{V}_{AB} \cdot (\bar{I}_A^{\,*} - \bar{I}_B^{\,*})$ (Equation 57)
BC	$\bar{S} = \bar{V}_{BC} \cdot (\bar{I}_B^{\,*} - \bar{I}_C^{\,*})$ (Equation 58)
Table continues on next page	

Set value: *Mode*	Formula used for complex power calculation
CA	$\bar{S} = \bar{V}_{CA} \cdot (\bar{I}_C^* - \bar{I}_A^*)$ (Equation 59)
A	$\bar{S} = 3 \cdot \bar{V}_A \cdot \bar{I}_A^*$ (Equation 60)
B	$\bar{S} = 3 \cdot \bar{V}_B \cdot \bar{I}_B^*$ (Equation 61)
C	$\bar{S} = 3 \cdot \bar{V}_C \cdot \bar{I}_C^*$ (Equation 62)

The active and reactive power is available from the function and can be used for monitoring and fault recording.

The component of the complex power S = P + jQ in the direction *Angle1(2)* is calculated. If this angle is 0° the active power component P is calculated. If this angle is 90° the reactive power component Q is calculated.

The calculated power component is compared to the power pick up setting *Power1(2)*. For directional underpower protection, a pickup signal PICKUP1(2) is activated if the calculated power component is smaller than the pick up value. For directional overpower protection, a pickup signal PICKUP1(2) is activated if the calculated power component is larger than the pick up value. After a set time delay *TripDelay1(2)* a trip TRIP1(2) signal is activated if the pickup signal is still active. At activation of any of the two stages a common signal PICKUP will be activated. At trip from any of the two stages also a common signal TRIP will be activated.

To avoid instability there is a hysteresis in the power function. The absolute hysteresis for stage 1(2) is 0.5 p.u. for Power1(2) ≥ 1.0 p.u., else the hysteresis is 0.5 Power1(2).

If the measured power drops under the (Power1(2) - hysteresis) value, the over-power function will reset after 0.06 seconds. If the measured power comes over the (Power1(2) + hysteresis) value, the under-power function will reset after 0.06 seconds. The reset means that the pickup signal will drop out and that the timer of the stage will reset.

7.8.4.1 Low pass filtering

In order to minimize the influence of the noise signal on the measurement it is possible to introduce the recursive, low pass filtering of the measured values for S (P, Q). This

will make slower measurement response to the step changes in the measured quantity. Filtering is performed in accordance with the following recursive formula:

$$S = TD \cdot S_{Old} + (1 - TD) \cdot S_{Calculated}$$

(Equation 63)

Where

S	is a new measured value to be used for the protection function
S_{old}	is the measured value given from the function in previous execution cycle
$S_{Calculated}$	is the new calculated value in the present execution cycle
TD	is settable parameter by the end user which influence the filter properties

Default value for parameter *TD* is *0.00*. With this value the new calculated value is immediately given out without any filtering (that is without any additional delay). When *TD* is set to value bigger than 0, the filtering is enabled. A typical value for *TD=0.92* in case of slow operating functions.

7.8.5 Technical data

Table 104: GOPPDOP, GUPPDUP (32/37) technical data

Function	Range or value	Accuracy
Power level	(0.0–500.0)% of *SBase*	± 1.0% of S_r at S < S_r ± 1.0% of S at S > S_r
	(1.0-2.0)% of *SBase*	< ± 50% of set value
	(2.0-10)% of *SBase*	< ± 20% of set value
Characteristic angle	(-180.0–180.0) degrees	2 degrees
Timers	(0.010 - 6000.000) s	± 0.5% ± 25 ms

7.9 Negative sequence based overcurrent function DNSPTOC (46)

7.9.1 Identification

Function description	IEC 61850 identification	IEC 60617 identification	ANSI/IEEE C37.2 device number
Negative sequence based overcurrent function	DNSPTOC	*3I2>*	46

7.9.2 Functionality

Negative sequence based overcurrent function (DNSPTOC, 46) may be used in power line applications where the reverse zero sequence source is weak or open, the forward source impedance is strong and it is desired to detect forward ground faults.

Additionally, it is applied in applications on cables, where zero sequence impedance depends on the fault current return paths, but the cable negative sequence impedance is practically constant.

The directional function is current and voltage polarized. The function can be set to forward, reverse or non-directional independently for each step.

DNSPTOC (46) protects against all unbalanced faults including phase-to-phase faults. The minimum pickup current of the function must be set to above the normal system unbalance level in order to avoid unwanted tripping.

7.9.3 Function block

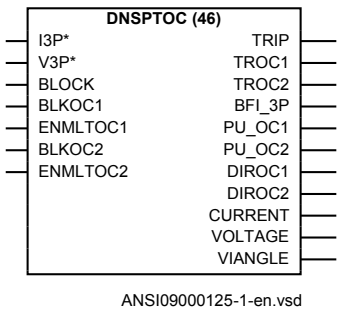

Figure 73: DNSPTOC (46) function block

7.9.4 Signals

Table 105: DNSPTOC (46) Input signals

Name	Type	Default	Description
I3P	GROUP SIGNAL	-	Three phase group signal for current inputs
V3P	GROUP SIGNAL	-	Three phase group signal for voltage inputs
BLOCK	BOOLEAN	0	Block of function
BLKOC1	BOOLEAN	0	Block of over current function OC1
ENMLTOC1	BOOLEAN	0	Enable signal for current multiplier - step1 (OC1)
BLKOC2	BOOLEAN	0	Block of over current function OC2
ENMLTOC2	BOOLEAN	0	Enable signal for current multiplier - step 2 (OC2)

Table 106: DNSPTOC (46) Output signals

Name	Type	Description
TRIP	BOOLEAN	Common trip signal
TROC1	BOOLEAN	Trip signal from step 1 (OC1)
TROC2	BOOLEAN	Trip signal from step 2 (OC2)
BFI_3P	BOOLEAN	General pickup signal
PU_OC1	BOOLEAN	OC1_PICK UP
PU_OC2	BOOLEAN	OC2_PICK UP
DIROC1	INTEGER	Directional mode of step 1(non-directional, forward, reverse)
DIROC2	INTEGER	Directional mode of step 2 (non-directional, forward, reverse)
CURRENT	REAL	Measured current value
VOLTAGE	REAL	Measured voltage value
VIANGLE	REAL	Angle between voltage and current

7.9.5 Settings

Table 107: DNSPTOC (46) Group settings (basic)

Name	Values (Range)	Unit	Step	Default	Description
Operation	Disabled Enabled	-	-	Disabled	Disable/Enable Operation
RCADir	-180 - 180	Deg	1	-75	Relay characteristic angle
ROADir	1 - 90	Deg	1	75	Relay operate angle

Table continues on next page

Name	Values (Range)	Unit	Step	Default	Description
LowVolt_VM	0.0 - 5.0	%VB	0.1	0.5	Voltage level in % of Vbase below which ActLowVolt control takes over
Operation_OC1	Disabled Enabled	-	-	Disabled	Operation DISABLE/ENABLE for step 1 (OC1)
PickupCurr_OC1	2.0 - 5000.0	%IB	1.0	120.0	Operate current level in % of IBase for step 1 (OC1)
MultPU_OC1	1.0 - 10.0	-	0.1	2.0	Multiplier for current operate level for step 1 (OC1)
tDef_OC1	0.00 - 6000.00	s	0.01	0.50	Independent (definite) time delay for step 1 (OC1)
DirMode_OC1	Non-directional Forward Reverse	-	-	Non-directional	Directional mode of step 1 (non-directional, forward, reverse)
DirPrinc_OC1	I&V IcosPhi&U	-	-	I&V	Measuring on I & V or IcosPhi & V for step 1 (OC1)
ActLowVolt1_VM	Non-directional Block Memory	-	-	Non-directional	Low votlage level action for step 1 (Non-directional, Block, Memory)
Operation_OC2	Disabled Enabled	-	-	Disabled	Operation DISABLE/ENABLE for step 2 (OC2)
PickupCurr_OC2	2.0 - 5000.0	%IB	1.0	120.0	Operate current level in % of Ibase for step 2 (OC2)
MultPU_OC2	1.0 - 10.0	-	0.1	2.0	Operate current level in % of Ibase for step 2 (OC2)
tDef_OC2	0.00 - 6000.00	s	0.01	0.50	Independent (definite) time delay for step 2 (OC2)
DirMode_OC2	Non-directional Forward Reverse	-	-	Non-directional	Directional mode of step 2 (non-directional, forward, reverse)
DirPrinc_OC2	I&V IcosPhi&U	-	-	I&V	Measuring on I & V or IcosPhi & V for step 2 (OC2)
ActLowVolt2_VM	Non-directional Block Memory	-	-	Non-directional	Low votlage level action for step 2 (Non-directional, Block, Memory)

ActLowVolt1 and *ActLowVolt2* should not be set to *Memory*.

Table 108: DNSPTOC (46) Non group settings (basic)

Name	Values (Range)	Unit	Step	Default	Description
GlobalBaseSel	1 - 6	-	1	1	Selection of one of the Global Base Value groups

7.9.6 Monitored data

Table 109: DNSPTOC (46) Monitored data

Name	Type	Values (Range)	Unit	Description
CURRENT	REAL	-	A	Measured current value
VOLTAGE	REAL	-	kV	Measured voltage value
VIANGLE	REAL	-	deg	Angle between voltage and current

7.9.7 Operation principle

Negative sequence based overcurrent function (DNSPTOC, 46) has two settable current levels, setting parameters *PickupCurr_OC1* and *PickupCurr_OC2*. Both features have definite time characteristics with settings *tDef_OC1* and *tDef_OC2* respectively. It is possible to change the direction of these steps to *forward*, *reverse* or *non-directional* by setting parameters *DirMode_OC1* and *DirMode_OC2*. At too low polarizing voltage the overcurrent feature can be either blocked or non-directional. This is controlled by settings *ActLowVolt1_VM* and *ActLowVolt2_VM*.

7.9.8 Technical data

Table 110: DNSPTOC (46) Technical data

Function	Range or value	Accuracy
Operate current	(2.0 - 5000.0) % of *IBase*	± 1.0% of I_r at $I < I_n$ ± 1.0% of I at $I > I_n$
Reset ratio	> 95 %	-
Low voltage level for memory	(0.0 - 5.0) % of *VBase*	< ± 0.5% of V_n
Relay characteristic angle	(-180 - 180) degrees	± 2.0 degrees
Relay operate angle	(1 - 90) degrees	± 2.0 degrees
Timers	(0.00 - 6000.00) s	± 0.5% ± 25 ms
Operate time, non-directional	30 ms typically at 0 to 2 x I_{set} 20 ms typically at 0 to 10 x I_{set}	-
Reset time, non-directional	40 ms typically at 2 to 0 x I_{set}	-
Operate time, directional	30 ms typically at 0 to 2 x I_{set} 20 ms typically at 0 to 10 x I_{set}	-
Reset time, directional	40 ms typically at 2 to 0 x I_{set}	-
Critical impulse time	10 ms typically at 0 to 2 x I_{set} 2 ms typically at 0 to 10 x I_{set}	-
Impulse margin time	15 ms typically	-
Dynamic overreach	< 10% at t = 300 ms	-

Section 8 Voltage protection

8.1 Two step undervoltage protection UV2PTUV (27)

8.1.1 Identification

Function description	IEC 61850 identification	IEC 60617 identification	ANSI/IEEE C37.2 device number
Two step undervoltage protection	UV2PTUV	*2U<*	27

8.1.2 Functionality

Undervoltages can occur in the power system during faults or abnormal conditions. Two step undervoltage protection (UV2PTUV, 27) function can be used to open circuit breakers to prepare for system restoration at power outages or as long-time delayed back-up to primary protection.

UV2PTUV (27) has two voltage steps, where step 1 is settable as inverse or definite time delayed. Step 2 is always definite time delayed.

8.1.3 Function block

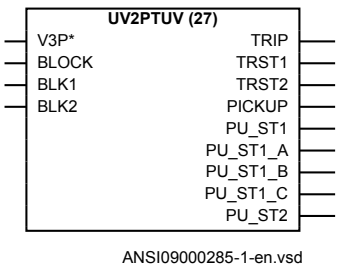

Figure 74: UV2PTUV (27) function block

8.1.4 Signals

Table 111: UV2PTUV (27) Input signals

Name	Type	Default	Description
V3P	GROUP SIGNAL	-	Three phase group signal for voltage inputs
BLOCK	BOOLEAN	0	Block of function
BLK1	BOOLEAN	0	Block of step 1
BLK2	BOOLEAN	0	Block of step 2

Table 112: UV2PTUV (27) Output signals

Name	Type	Description
TRIP	BOOLEAN	Common trip signal
TRST1	BOOLEAN	Trip signal from step 1
TRST2	BOOLEAN	Trip signal from step 2
PICKUP	BOOLEAN	General pickup signal
PU_ST1	BOOLEAN	Start signal from step 1
PU_ST1_A	BOOLEAN	Pick up signal from step 1 phase A
PU_ST1_B	BOOLEAN	Pick up signal from step 1 phase B
PU_ST1_C	BOOLEAN	Pick up signal from step 1 phase C
PU_ST2	BOOLEAN	Start signal from step 2

8.1.5 Settings

Table 113: UV2PTUV (27) Group settings (basic)

Name	Values (Range)	Unit	Step	Default	Description
Operation	Disabled Enabled	-	-	Disabled	Disable/Enable Operation
OperationStep1	Disabled Enabled	-	-	Enabled	Enable execution of step 1
Characterist1	Definite time Inverse curve A Inverse curve B	-	-	Definite time	Selection of time delay curve type for step 1
OpMode1	1 out of 3 2 out of 3 3 out of 3	-	-	1 out of 3	Number of phases required to operate (1 of 3, 2 of 3, 3 of 3) from step 1
Pickup1	1 - 100	%VB	1	70	Voltage start value (DT & IDMT) in % of VBase for step 1
t1	0.00 - 6000.00	s	0.01	5.00	Definite time delay of step 1

Table continues on next page

Name	Values (Range)	Unit	Step	Default	Description
t1Min	0.000 - 60.000	s	0.001	5.000	Minimum operate time for inverse curves for step 1
TD1	0.05 - 1.10	-	0.01	0.05	Time multiplier for the inverse time delay for step 1
OperationStep2	Disabled Enabled	-	-	Enabled	Enable execution of step 2
OpMode2	1 out of 3 2 out of 3 3 out of 3	-	-	1 out of 3	Number of phases required to operate (1 of 3, 2 of 3, 3 of 3) from step 2
Pickup2	1 - 100	%VB	1	50	Voltage start value (DT & IDMT) in % of VBase for step 2
t2	0.000 - 60.000	s	0.001	5.000	Definie time delay of step 2

Table 114: UV2PTUV (27) Non group settings (basic)

Name	Values (Range)	Unit	Step	Default	Description
GlobalBaseSel	1 - 6	-	1	1	Selection of one of the Global Base Value groups
ConnType	PhN DFT PhN RMS PhPh DFT PhPh RMS	-	-	PhN DFT	Group selector for connection type

8.1.6 Monitored data

Table 115: UV2PTUV (27) Monitored data

Name	Type	Values (Range)	Unit	Description
V_A	REAL	-	kV	Voltage in phase A
V_B	REAL	-	kV	Voltage in phase B
V_C	REAL	-	kV	Voltage in phase C

8.1.7 Operation principle

Two-step undervoltage protection (UV2PTUV ,27) is used to detect low power system voltage. UV2PTUV (27) has two voltage measuring steps with separate time delays. If one, two or three phase voltages decrease below the set value, a corresponding PICKUP signal is generated. UV2PTUV (27) can be set to PICKUP/TRIP based on *1 out of 3*, *2 out of 3* or *3 out of 3* of the measured voltages, being below the set point. If the voltage remains below the set value for a time period corresponding to the chosen time delay, the corresponding trip signal is issued. The time delay characteristic is

settable for step 1 and can be either definite or inverse time delayed. Step 2 is always definite time delayed.

UV2PTUV (27) can be set to measure phase-to-ground fundamental value, phase-to-phase fundamental value, phase-to-ground true RMS value or phase-to-phase true RMS value. The choice of the measuring is done by the parameter *ConnType*. The voltage related settings are made in percent of base voltage which is set in kV phase-to-phase voltage. This means operation for phase-to-ground voltage under:

$$Vpickup < (\%) \cdot VBase(kV) / \sqrt{3}$$

(Equation 64)

and operation for phase-to-phase voltage under:

$$Vpickup < (\%) \cdot VBase(kV)$$

(Equation 65)

When phase-to-ground voltage measurement is selected the function automatically introduces division of the base value by the square root of three.

8.1.7.1 Measurement principle

Depending on the set *ConnType* value, UV2PTUV (27) measures phase-to-ground or phase-to-phase voltages and compare against set values, *Pickup1* and *Pickup2*. The parameters *OpMode1* and *OpMode2* influence the requirements to activate the PICKUP outputs. Either *1 out of 3*, *2 out of 3*, or *3 out of 3* measured voltages have to be lower than the corresponding set point to issue the corresponding PICKUP signal.

To avoid oscillations of the output PICKUP signal, a hysteresis has been included.

8.1.7.2 Time delay

The time delay for step 1 can be either definite time delay (DT) or inverse time undervoltage (TUV). Step 2 is always definite time delay (DT). For the inverse time delay two different modes are available; inverse curve A and inverse curve B.

The type A curve is described as:

$$t = \frac{TD}{\frac{Vpickup < -V}{Vpickup <}}$$

(Equation 66)

The type B curve is described as:

$$t = \frac{TD \cdot 480}{\left(32 \cdot \frac{\text{Vpickup < -V}}{\text{Vpickup <}} - 0.5\right)^{2.0}} + 0.055$$

(Equation 67)

The lowest voltage is always used for the inverse time delay integration. The details of the different inverse time characteristics are shown in section 20.3 "Inverse time characteristics".

Trip signal issuing requires that the undervoltage condition continues for at least the user set time delay. This time delay is set by the parameter *t1* and *t2* for definite time mode (DT) and by some special voltage level dependent time curves for the inverse time mode (TUV). If the pickup condition, with respect to the measured voltage ceases during the delay time, the corresponding pickup output is reset.

8.1.7.3 Blocking

It is possible to block Two step undervoltage protection (UV2PTUV ,27) partially or completely, by binary input signals or by parameter settings, where:

BLOCK:	blocks all outputs
BLK1:	blocks all pickup and trip outputs related to step 1
BLK2:	blocks all pickup and trip outputs related to step 2

8.1.7.4 Design

The voltage measuring elements continuously measure the three phase-to-neutral voltages or the three phase-to-phase voltages. Recursive fourier filters or true RMS filters of input voltage signals are used. The voltages are individually compared to the set value, and the lowest voltage is used for the inverse time characteristic integration. A special logic is included to achieve the *1 out of 3*, *2 out of 3* and *3 out of 3* criteria to fulfill the PICKUP condition. The design of Two step undervoltage protection UV2PTUV (27) is schematically shown in Figure 75.

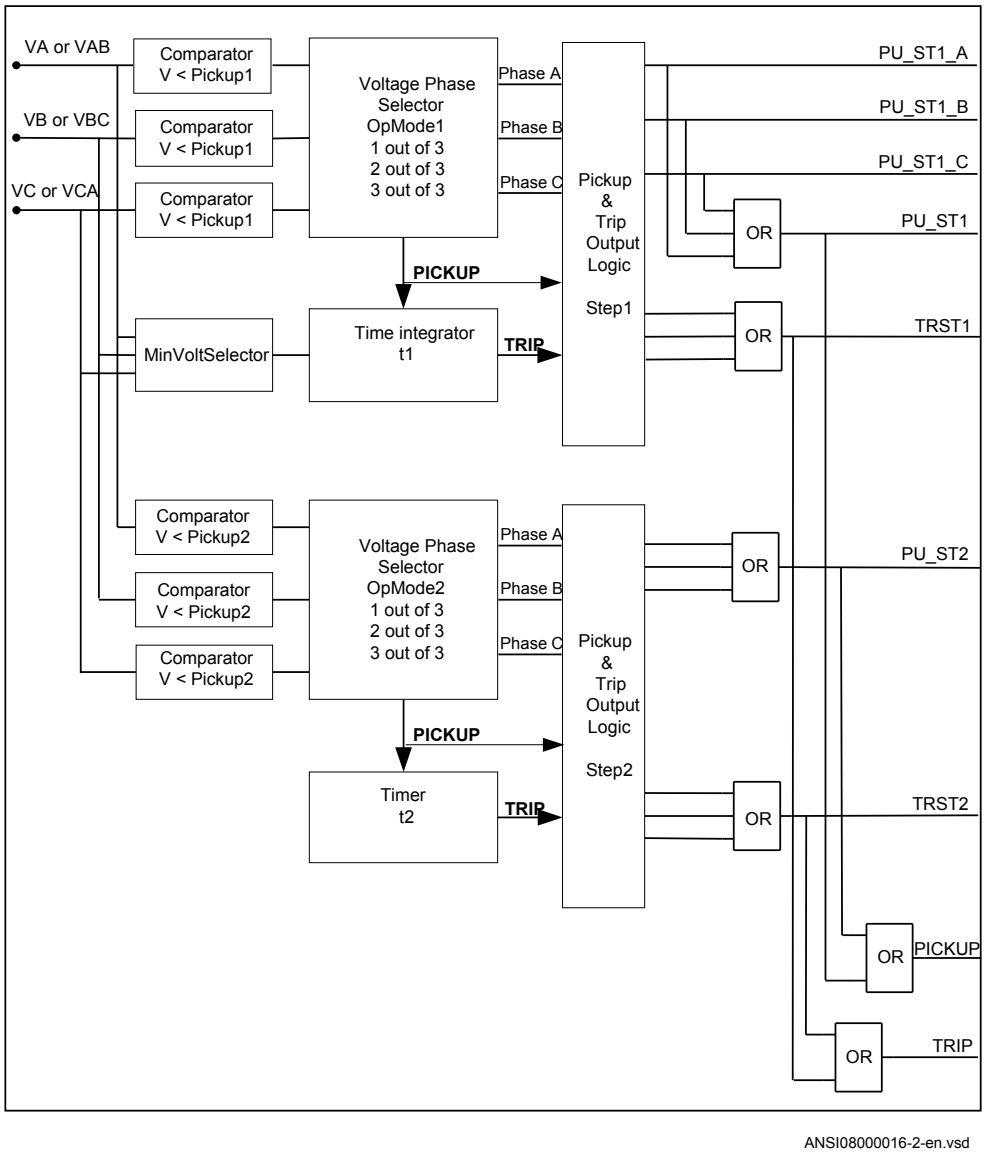

Figure 75: Schematic design of Two step undervoltage protection UV2PTUV (27)

8.1.8 Technical data

Table 116: UV2PTUV (27) technical data

Function	Range or value	Accuracy
Operate voltage, low and high step	(1–100)% of *VBase*	± 0.5% of V_n
Reset ratio	<105%	-
Inverse time characteristics for low and high step, see table 484	-	See table 484
Definite time delay, step 1	(0.00 - 6000.00) s	± 0.5% ± 25 ms
Definite time delays, step 2	(0.000-60.000) s	± 0.5% ±25 ms
Minimum operate time, inverse characteristics	(0.000–60.000) s	± 0.5% ± 25 ms
Operate time, pickup function	30 ms typically at 1.2 to 0.5 x V_{set}	-
Reset time, pickup function	40 ms typically at 0.5 to 1.2 xV_{set}	-
Critical impulse time	10 ms typically at 1.2 to 0.8 x V_{set}	-
Impulse margin time	15 ms typically	-

8.2 Two step overvoltage protection OV2PTOV (59)

8.2.1 Identification

Function description	IEC 61850 identification	IEC 60617 identification	ANSI/IEEE C37.2 device number
Two step overvoltage protection	OV2PTOV	2U>	59

8.2.2 Functionality

Overvoltages may occur in the power system during abnormal conditions such as sudden power loss, tap changer regulating failures, open line ends on long lines etc.

Two step overvoltage protection (OV2PTOV, 59) function can be used to detect open line ends, normally then combined with a directional reactive over-power function to supervise the system voltage. When triggered, the function will cause an alarm, switch in reactors, or switch out capacitor banks.

OV2PTOV (59) has two voltage steps, where step 1 can be set as inverse or definite time delayed. Step 2 is always definite time delayed.

OV2PTOV (59) has an extremely high reset ratio to allow settings close to system service voltage.

8.2.3 Function block

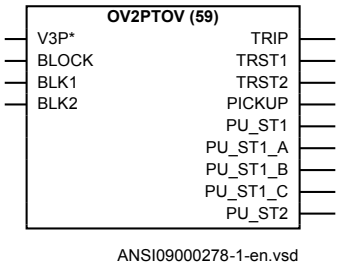

Figure 76: OV2PTOV function block (59)

8.2.4 Signals

Table 117: OV2PTOV (59) Input signals

Name	Type	Default	Description
V3P	GROUP SIGNAL	-	Three phase group signal for voltage inputs
BLOCK	BOOLEAN	0	Block of function
BLK1	BOOLEAN	0	Block of step 1
BLK2	BOOLEAN	0	Block of step 2

Table 118: OV2PTOV (59) Output signals

Name	Type	Description
TRIP	BOOLEAN	Common trip signal
TRST1	BOOLEAN	Trip signal from step 1
TRST2	BOOLEAN	Trip signal from step 2
PICKUP	BOOLEAN	General pickup signal
Table continues on next page		

Name	Type	Description
PU_ST1	BOOLEAN	Start signal from step 1
PU_ST1_A	BOOLEAN	Pick up signal from step 1 phase A
PU_ST1_B	BOOLEAN	Pick up signal from step 1 phase B
PU_ST1_C	BOOLEAN	Pick up signal from step 1 phase C
PU_ST2	BOOLEAN	Start signal from step 2

8.2.5 Settings

Table 119: OV2PTOV (59) Group settings (basic)

Name	Values (Range)	Unit	Step	Default	Description
Operation	Disabled Enabled	-	-	Disabled	Disable/Enable Operation
OperationStep1	Disabled Enabled	-	-	Enabled	Enable execution of step 1
Characterist1	Definite time Inverse curve A Inverse curve B Inverse curve C	-	-	Definite time	Selection of time delay curve type for step 1
OpMode1	1 out of 3 2 out of 3 3 out of 3	-	-	1 out of 3	Number of phases required to operate (1 of 3, 2 of 3, 3 of 3) from step 1
Pickup1	1 - 200	%VB	1	120	Voltage start value (DT & IDMT) in % of VBase for step 1
t1	0.00 - 6000.00	s	0.01	5.00	Definite time delay of step 1
t1Min	0.000 - 60.000	s	0.001	5.000	Minimum operate time for inverse curves for step 1
TD1	0.05 - 1.10	-	0.01	0.05	Time multiplier for the inverse time delay for step 1
OperationStep2	Disabled Enabled	-	-	Enabled	Enable execution of step 2
OpMode2	1 out of 3 2 out of 3 3 out of 3	-	-	1 out of 3	Number of phases required to operate (1 of 3, 2 of 3, 3 of 3) from step 2
Pickup2	1 - 200	%VB	1	150	Voltage start value (DT & IDMT) in % of VBase for step 2
t2	0.000 - 60.000	s	0.001	5.000	Definite time delay of step 2

Table 120: OV2PTOV (59) Non group settings (basic)

Name	Values (Range)	Unit	Step	Default	Description
GlobalBaseSel	1 - 6	-	1	1	Selection of one of the Global Base Value groups
ConnType	PhN DFT PhN RMS PhPh DFT PhPh RMS	-	-	PhN DFT	Group selector for connection type

8.2.6 Monitored data

Table 121: OV2PTOV (59) Monitored data

Name	Type	Values (Range)	Unit	Description
V_A	REAL	-	kV	Voltage in phase A
V_B	REAL	-	kV	Voltage in phase B
V_C	REAL	-	kV	Voltage in phase C

8.2.7 Operation principle

Two step overvoltage protection OV2PTOV (59) is used to detect high power system voltage. OV2PTOV (59) has two steps with separate time delays. If one-, two- or three-phase voltages increase above the set value, a corresponding PICKUP signal is issued. OV2PTOV (59) can be set to PICKUP/TRIP, based on *1 out of 3*, *2 out of 3* or *3 out of 3* of the measured voltages, being above the set point. If the voltage remains above the set value for a time period corresponding to the chosen time delay, the corresponding trip signal is issued.

The time delay characteristic is settable for step 1 and can be either definite or inverse time delayed. Step 2 is always definite time delayed.

The voltage related settings are made in percent of the global set base voltage *VBase*, which is set in kV, phase-to-phase.

OV2PTOV (59) can be set to measure phase-to-ground fundamental value, phase-to-phase fundamental value, phase-to-ground RMS value or phase-to-phase RMS value. The choice of measuring is done by the parameter *ConnType*.

The voltage related settings are made in percent of base voltage which is set in kV phase-to-phase voltage. OV2PTOV (59) will operate if the voltage gets higher than the set percentage of the set global base voltage *VBase*. This means operation for phase-to-ground voltage over:

$$Vpickup > (\%) \cdot VBase(kV) / \sqrt{3}$$

(Equation 68)

and operation for phase-to-phase voltage over:

$$Vpickup > (\%) \cdot VBase(kV)$$

(Equation 69)

When phase-to-ground voltage measurement is selected the function automatically introduces division of the base value by the square root of three.

8.2.7.1 Measurement principle

All the three voltages are measured continuously, and compared with the set values, *Pickup1* and *Pickup2*. The parameters *OpMode1* and *OpMode2* influence the requirements to activate the PICKUP outputs. Either *1 out of 3*, *2 out of 3* or *3 out of 3* measured voltages have to be higher than the corresponding set point to issue the corresponding PICKUP signal.

To avoid oscillations of the output PICKUP signal, a hysteresis has been included.

8.2.7.2 Time delay

The time delay for step 1 can be either definite time delay (DT) or inverse time overvoltage (TOV). Step 2 is always definite time delay (DT). For the inverse time delay three different modes are available:

- inverse curve A
- inverse curve B
- inverse curve C

The type A curve is described as:

$$t = \frac{TD}{\frac{V - Vpickup >}{Vpickup >}}$$

(Equation 70)

The type B curve is described as:

$$t = \frac{TD \cdot 480}{32 \cdot \frac{V - Vpickup >}{Vpickup >} - 0.5} - 0.035$$

(Equation 71)

The type C curve is described as:

$$t = \frac{TD \cdot 480}{32 \cdot \frac{V - Vpickup >}{Vpickup >} - 0.5} + 0.035$$

(Equation 72)

The highest phase (or phase-to-phase) voltage is always used for the inverse time delay integration, see Figure 77. The details of the different inverse time characteristics are shown in section "Inverse time characteristics"

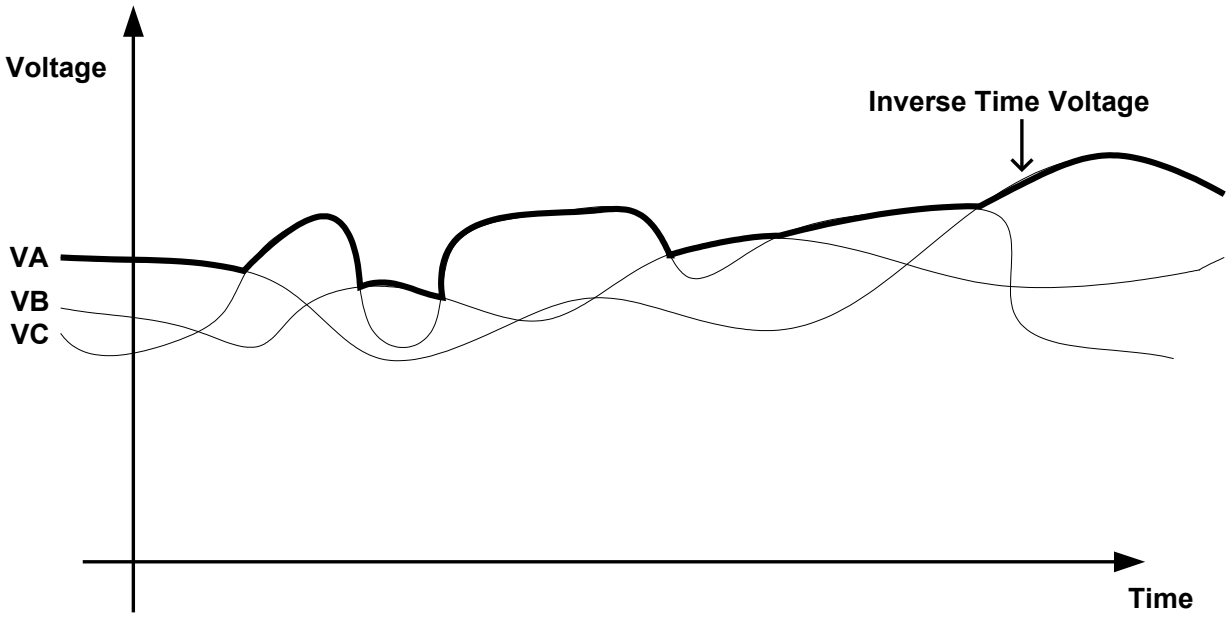

Figure 77: Voltage used for the inverse time characteristic integration

A TRIP requires that the overvoltage condition continues for at least the user set time delay. This time delay is set by the parameter *t1* and *t2* for definite time mode (DT) and by selected voltage level dependent time curves for the inverse time mode (TOV). If the PICKUP condition, with respect to the measured voltage ceases during the delay time, the corresponding PICKUP output is reset.

8.2.7.3 Blocking

It is possible to block two step overvoltage protection (OV2PTOV ,59) partially or completely, by binary input signals where:

BLOCK:	blocks all outputs
BLK1:	blocks all pickup and trip outputs related to step 1
BLK2:	blocks all pickup and trip outputs related to step 2

8.2.7.4 Design

The voltage measuring elements continuously measure the three phase-to-ground voltages or the three phase-to-phase voltages. Recursive Fourier filters filter the input voltage signals. The phase voltages are individually compared to the set value, and the highest voltage is used for the inverse time characteristic integration. A special logic is included to achieve the *1 out of 3*, *2 out of 3* or *3 out of 3* criteria to fulfill the PICKUP condition. The design of Two step overvoltage protection (OV2PTOV, 59) is schematically described in Figure 78.

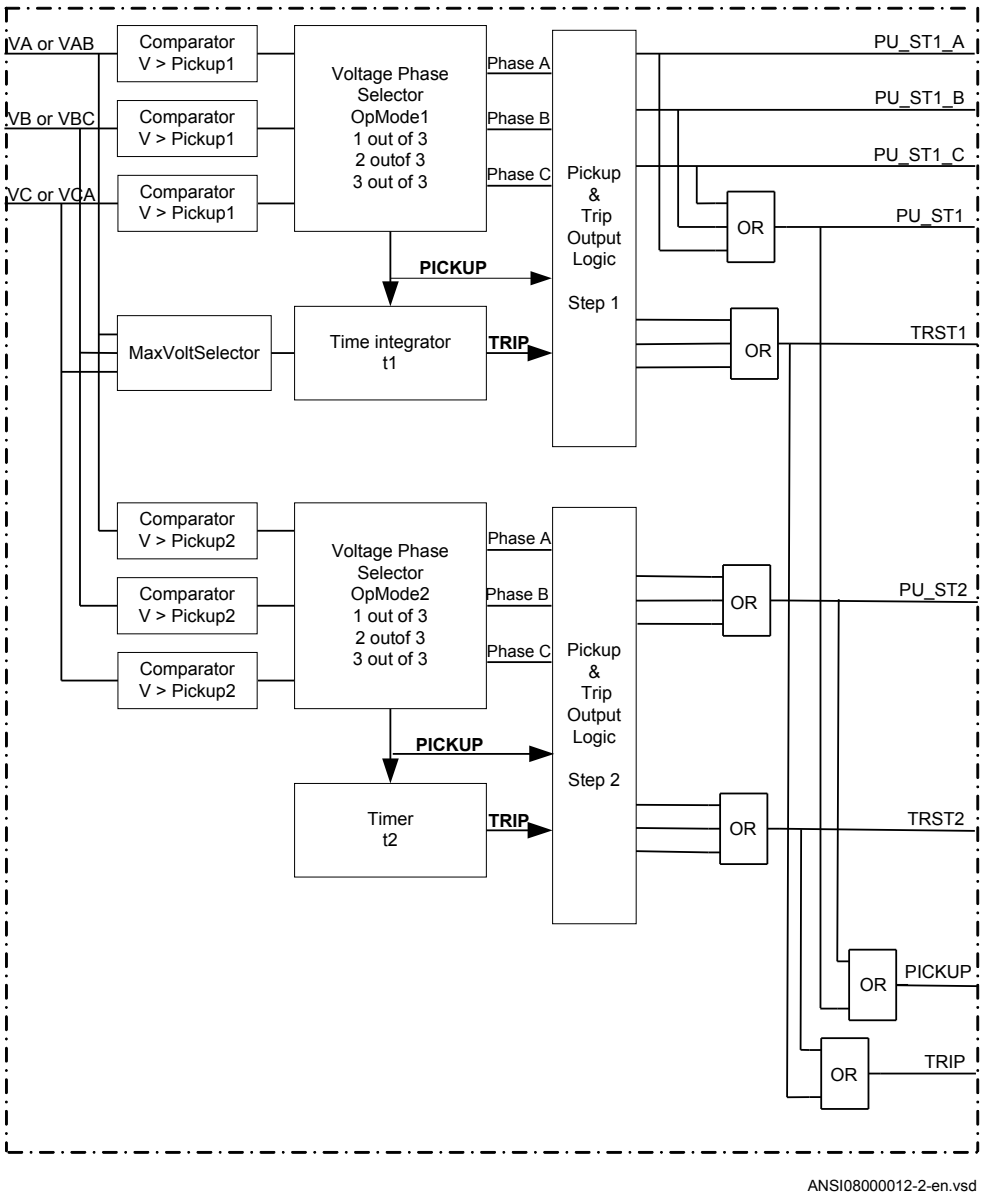

Figure 78: Schematic design of Two step overvoltage protection (OV2PTOV, 59)

8.2.8 Technical data

Table 122: OV2PTOV (59) technical data

Function	Range or value	Accuracy
Operate voltage, low and high step	(1-200)% of *VBase*	± 0.5% of V_n at V < V_n ± 0.5% of V at V > V_n
Reset ratio	>95%	-
Inverse time characteristics for low and high step, see table 483	-	See table 483
Definite time delay, step 1	(0.00 - 6000.00) s	± 0.5% ± 25 ms
Definite time delays, step 2	(0.000-60.000) s	± 0.5% ± 25 ms
Minimum operate time, Inverse characteristics	(0.000-60.000) s	± 0.5% ± 25 ms
Operate time, pickup function	30 ms typically at 0 to 2 x V_{set}	-
Reset time, pickup function	40 ms typically at 2 to 0 x V_{set}	-
Critical impulse time	10 ms typically at 0 to 2 x V_{set}	-
Impulse margin time	15 ms typically	-

8.3 Two step residual overvoltage protection ROV2PTOV (59N)

8.3.1 Identification

Function description	IEC 61850 identification	IEC 60617 identification	ANSI/IEEE C37.2 device number
Two step residual overvoltage protection	ROV2PTOV	*3U0>*	59N

8.3.2 Functionality

Residual voltages may occur in the power system during ground faults.

Two step residual overvoltage protection ROV2PTOV (59N) function calculates the residual voltage from the three-phase voltage input transformers or measures it from a single voltage input transformer fed from a broken delta or neutral point voltage transformer.

ROV2PTOV (59N) has two voltage steps, where step 1 can be set as inverse or definite time delayed. Step 2 is always definite time delayed.

8.3.3 Function block

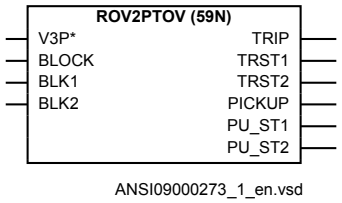

Figure 79: ROV2PTOV (59N) function block

8.3.4 Signals

Table 123: ROV2PTOV (59N) Input signals

Name	Type	Default	Description
V3P	GROUP SIGNAL	-	Three phase group signal for voltage inputs
BLOCK	BOOLEAN	0	Block of function
BLK1	BOOLEAN	0	Block of step 1
BLK2	BOOLEAN	0	Block of step 2

Table 124: ROV2PTOV (59N) Output signals

Name	Type	Description
TRIP	BOOLEAN	Common trip signal
TRST1	BOOLEAN	Trip signal from step 1
TRST2	BOOLEAN	Trip signal from step 2
PICKUP	BOOLEAN	General pickup signal
PU_ST1	BOOLEAN	Start signal from step 1
PU_ST2	BOOLEAN	Start signal from step 2

8.3.5 Settings

Table 125: ROV2PTOV (59N) Group settings (basic)

Name	Values (Range)	Unit	Step	Default	Description
Operation	Disabled Enabled	-	-	Disabled	Disable/Enable Operation
OperationStep1	Disabled Enabled	-	-	Enabled	Enable execution of step 1
Characterist1	Definite time Inverse curve A Inverse curve B Inverse curve C	-	-	Definite time	Selection of time delay curve type for step 1
Pickup1	1 - 200	%VB	1	30	Voltage start value (DT & IDMT) in % of VBase for step 1
t1	0.00 - 6000.00	s	0.01	5.00	Definite time delay of step 1
t1Min	0.000 - 60.000	s	0.001	5.000	Minimum operate time for inverse curves for step 1
TD1	0.05 - 1.10	-	0.01	0.05	Time multiplier for the inverse time delay for step 1
OperationStep2	Disabled Enabled	-	-	Enabled	Enable execution of step 2
Pickup2	1 - 100	%VB	1	45	Voltage start value (DT & IDMT) in % of VBase for step 2
t2	0.000 - 60.000	s	0.001	5.000	Definite time delay of step 2

Table 126: ROV2PTOV (59N) Non group settings (basic)

Name	Values (Range)	Unit	Step	Default	Description
GlobalBaseSel	1 - 6	-	1	1	Selection of one of the Global Base Value groups

8.3.6 Monitored data

Table 127: ROV2PTOV (59N) Monitored data

Name	Type	Values (Range)	Unit	Description
VLevel	REAL	-	kV	Magnitude of measured voltage

8.3.7 Operation principle

Two step residual overvoltage protection ROV2PTOV (59N) is used to detect ground (zero sequence) overvoltages. The ground overvoltage $3V_0$ is normally computed by

adding the input phase voltages. $3V_0$ may also be input single phase by either measuring directly from a voltage transformer in the neutral of a power transformer, or from a secondary broken delta connection of a transformer with a wye-grounded primary. ROV2PTOV (59N) has two steps with separate time delays. If the ground overvoltage remains above the set value for a time period corresponding to the chosen time delay, the corresponding TRIP signal is issued.

The time delay characteristic is setable for step 1 and can be either definite or inverse time delayed. Step 2 is always definite time delayed.

The voltage related settings are made in percent of the global phase-to-phase base voltage divided by √3.

8.3.7.1 Measurement principle

The residual voltage is measured continuously, and compared with the set values, *Pickup1* and *Pickup2*.

To avoid oscillations of the output PICKUP signal, a hysteresis has been included.

8.3.7.2 Time delay

The time delay for step 1 can be either definite time delay (DT) or inverse time delay (TOV). Step 2 is always definite time delay (DT). For the inverse time delay three different modes are available:

- inverse curve A
- inverse curve B
- inverse curve C

The type A curve is described as:

$$t = \frac{TD}{\frac{V - Vpickup>}{Vpickup>}}$$

(Equation 73)

The type B curve is described as:

$$t = \frac{TD \cdot 480}{32 \cdot \frac{V - Vpickup>}{Vpickup>} - 0.5} - 0.035$$

(Equation 74)

The type C curve is described as:

$$t = \frac{TD \cdot 480}{32 \cdot \frac{V - Vpickup >}{Vpickup >} - 0.5} + 0.035$$

(Equation 75)

The details of the different inverse time characteristics are shown in section "Inverse time characteristics".

TRIP signal issuing requires that the residual overvoltage condition continues for at least the user set time delay. This time delay is set by the parameter *t1* and *t2* for definite time mode (DT) and by some special voltage level dependent time curves for the inverse time mode (TOV).

If the PICKUP condition, with respect to the measured voltage ceases during the delay time, the corresponding PICKUP output is reset.

8.3.7.3 Blocking

It is possible to block two step residual overvoltage protection (ROV2PTOV, 59N) partially or completely, by binary input signals where:

BLOCK:	blocks all outputs
BLK1:	blocks all pickupand trip outputs related to step 1
BLK2:	blocks all pickup and trip inputs related to step 2

8.3.7.4 Design

The voltage measuring elements continuously measure the residual voltage. Recursive Fourier filters filter the input voltage signal. The single input voltage is compared to the set value, and is also used for the inverse time characteristic integration. The design of Two step residual overvoltage protection (ROV2PTOV, 59N) is schematically described in Figure 80.

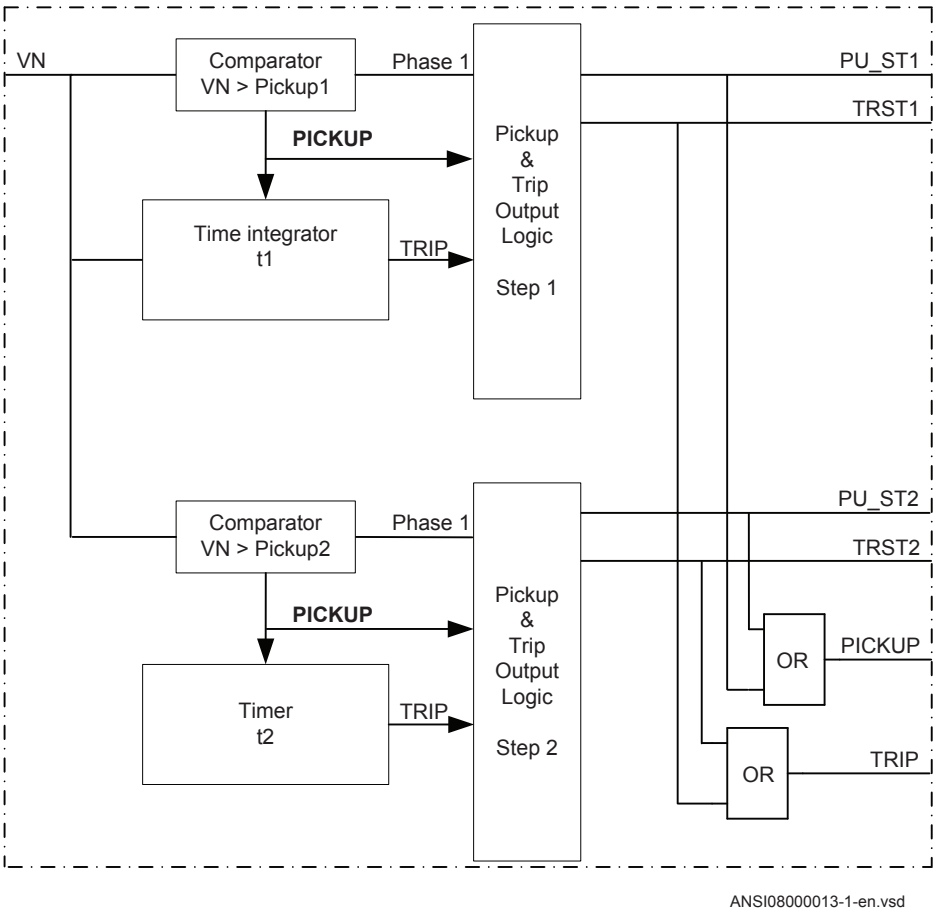

Figure 80: Schematic design of Two step residual overvoltage protection (ROV2PTOV, 59N)

The design of Two step residual overvoltage protection (ROV2PTOV, 59N) is schematically described in Figure 80. VN is a signal included in the three phase group signal V3P which shall be connected to output AI3P of the SMAI. If a connection is made to the 4 input GRPx_N (x is equal to instance number 2 to 12) on the SMAI, VN is this signal else VN is the vectorial sum of the three inputs GRPx_A to GRPx_C.

8.3.8 Technical data

Table 128: ROV2PTOV (59N) technical data

Function	Range or value	Accuracy
Operate voltage, step 1	(1-200)% of *VBase*	± 0.5% of V_n at V < V_n ± 0.5% of V at V > V_n
Operate voltage, step 2	(1–100)% of *VBase*	± 0.5% of V_n at V < V_n ± 0.5% of V at V > V_n
Reset ratio	>95%	-
Inverse time characteristics for low and high step, see table 485	-	See table 485
Definite time setting, step 1	(0.00–6000.00) s	± 0.5% ± 25 ms
Definite time setting, step 2	(0.000–60.000) s	± 0.5% ± 25 ms
Minimum operate time for step 1 inverse characteristic	(0.000-60.000) s	± 0.5% ± 25 ms
Operate time, pickup function	30 ms typically at 0 to 2 x V_{set}	-
Reset time, pickup function	40 ms typically at 2 to 0 x V_{set}	-
Critical impulse time	10 ms typically at 0 to 1.2 xV_{set}	-
Impulse margin time	15 ms typically	-

8.4 Overexcitation protection OEXPVPH (24)

8.4.1 Identification

Function description	IEC 61850 identification	IEC 60617 identification	ANSI/IEEE C37.2 device number
Overexcitation protection	OEXPVPH	*U/f* >	24

8.4.2 Functionality

When the laminated core of a power transformer or generator is subjected to a magnetic flux density beyond its design limits, stray flux will flow into non-laminated components not designed to carry flux and cause eddy currents to flow. The eddy currents can cause excessive heating and severe damage to insulation and adjacent parts in a relatively short time. The function has settable inverse operating curves and independent alarm stages.

8.4.3 Function block

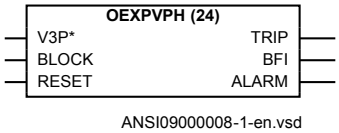

Figure 81: OEXPVPH (24) function block

8.4.4 Signals

Table 129: OEXPVPH (24) Input signals

Name	Type	Default	Description
V3P	GROUP SIGNAL	-	Three phase group signal for voltages
BLOCK	BOOLEAN	0	Block of function
RESET	BOOLEAN	0	Reset of function

Table 130: OEXPVPH (24) Output signals

Name	Type	Description
TRIP	BOOLEAN	Common trip signal
BFI	BOOLEAN	General pickup signal
ALARM	BOOLEAN	Overexcitation alarm signal

8.4.5 Settings

Table 131: OEXPVPH (24) Group settings (basic)

Name	Values (Range)	Unit	Step	Default	Description
Operation	Disabled Enabled	-	-	Disabled	Operation Disable / Enable
Pickup1	100.0 - 180.0	%VB/f	0.1	110.0	Operate level of V/Hz at no load and rated freq in % of (Vbase/frated)
Pickup2	100.0 - 200.0	%VB/f	0.1	140.0	High level of V/Hz above which tMin is used, in % of (Vbase/fn)
t_MinTripDelay	0.005 - 60.000	s	0.001	7.000	Minimum trip delay for V/Hz curve
TDForIEEECurve	1 - 60	-	1	1	Time multiplier for IEEE inverse type curve
AlarmPickup	50.0 - 120.0	%	0.1	100.0	Alarm pickup level
tAlarm	0.00 - 9000.00	s	0.01	5.00	Alarm time delay

Table 132: OEXPVPH (24) Non group settings (basic)

Name	Values (Range)	Unit	Step	Default	Description
GlobalBaseSel	1 - 6	-	1	1	Selection of one of the Global Base Value groups
VoltConn	Pos Seq UL1 UL2 UL3 UL1L2 UL2L3 UL3L1	-	-	Pos Seq	Selection of measured voltage

Only PosSeq or UL1L2 should be seleced for the VoltConn setting.

8.4.6 Monitored data

Table 133: OEXPVPH (24) Monitored data

Name	Type	Values (Range)	Unit	Description
TMTOTRIP	REAL	-	s	Calculated time to trip for overexcitation, in sec
VPERHZ	REAL	-	V/Hz	Voltage to frequency ratio in per-unit
THERMSTA	REAL	-	%	Overexcitation thermal status in % of trip pickup

8.4.7 Operation principle

The importance of Overexcitation protection (OEXPVPH, 24) function is growing as the power transformers as well as other power system elements today operate most of the time near their designated limits.

Modern design transformers are more sensitive to overexcitation than earlier types. This is a result of the more efficient designs and designs which rely on the improvement in the uniformity of the excitation level of modern systems. Thus, if emergency that causes overexcitation does occur, transformers may be damaged unless corrective action is promptly taken. Transformer manufacturers recommend an overexcitation protection as a part of the transformer protection system.

Overexcitation results from excessive applied voltage, possibly in combination with below-normal frequency. Such condition may occur when a transformer unit is loaded, but are more likely to arise when the transformer is unloaded, or when a loss of load occurs. Transformers directly connected to generators are in particular danger to experience overexcitation condition. It follows from the fundamental transformer equation, see equation 76, that peak flux density Bmax is directly proportional to induced voltage E, and inversely proportional to frequency f, and turns n.

$$E = 4.44 \cdot f \cdot n \cdot Bmax \cdot A$$

(Equation 76)

The relative excitation M is therefore according to equation 77.

$$M(p.u.) = \frac{E/f}{(Vr)/(fn)}$$

(Equation 77)

Disproportional variations in quantities E and f may give rise to core overfluxing. If the core flux density Bmax increases to a point above saturation level (typically 1.9 Tesla), the flux will no longer be contained within the core, but will extend into other (non-laminated) parts of the power transformer and give rise to eddy current circulations.

Overexcitation will result in:

- overheating of the non-laminated metal parts
- a large increase in magnetizing currents
- an increase in core and winding temperature
- an increase in transformer vibration and noise

Potection against overexcitation is based on calculation of the relative volt per hertz (V/Hz) ratio. Protection might initiate a reduction of the generator excitation (in case of a

step-up transformer), and if this fails, or if this is not possible, the TRIP signal will disconnect the transformer from the source after a delay ranging from seconds to minutes, typically 5-10 seconds.

Overexcitation protection may be of particular concern on directly connected generator unit transformers. Directly connected generator-transformers are subjected to a wide range of frequencies during the acceleration and deceleration of the turbine. In such cases, OEXPVPH (24) may trip the field breaker during a start-up of a machine, by means of the overexcitation ALARM signal. If this is not possible, the power transformer can be disconnected from the source, after a delay, by the TRIP signal.

The IEC 60076 - 1 standard requires that transformers operate continuously at not more than 10% above rated voltage at no load, and rated frequency. At no load, the ratio of the actual generator terminal voltage to the actual frequency should not exceed 1.1 times the ratio of transformer rated voltage to the rated frequency on a sustained basis, see equation 78.

$$\frac{E}{f} \leq 1.1 \cdot \frac{Vn}{fn}$$

(Equation 78)

or equivalently, with 1.1 · Vn = *Pickup1* according to equation 79.

$$\frac{E}{f} \leq \frac{Pickup1}{fn}$$

(Equation 79)

where:

Pickup1 is the maximum continuously allowed voltage at no load, and rated frequency.

Pickup1 is a setting parameter. The setting range is 100% to 180%. If the user does not know exactly what to set, then the default value for *Pickup1* = 110 % given by the IEC 60076-1 standard shall be used.

In OEXPVPH (24), the relative excitation M is expressed according to equation 80.

$$M\left(p.u.\right) = \frac{E/f}{Vn/fn}$$

(Equation 80)

It is clear from the above formula that, for an unloaded power transformer, M = 1 for any E and f, where the ratio E/f is equal to Vn/fn. A power transformer is not

overexcited as long as the relative excitation is M ≤ *Pickup1*, *Pickup1* expressed in % of Vn/fn.

It is assumed that overexcitation is a symmetrical phenomenon, caused by events such as loss-of-load, etc. It will be observed that a high phase-to-ground voltage does not mean overexcitation. For example, in an ungrounded power system, a single phase-to-ground fault means high voltages of the “healthy” two phases-to-ground, but no overexcitation on any winding. The phase-to-phase voltages will remain essentially unchanged. The important voltage is the voltage between the two ends of each winding.

8.4.7.1 Measured voltage

A check is made if the Selected voltage signal is higher than 70% of rated phase-to-ground voltage, when below this value, OEXPVPH (24) exits immediately, and no excitation is calculated.

The frequency value is received from the pre-processing block. The function operates for frequencies within the range of 33-60 Hz and of 42-75 Hz for 50 Hz and 60 Hz respectively.

- OEXPVPH (24) can be connected to any power transformer side, independent from the power flow.
- The side with a load tap changer must not be used, since the tap changer can change the relative excitation (M)

8.4.7.2 Operate time of the overexcitation protection

The operate time of OEXPVPH (24) is a function of the relative overexcitation.

The so called IEEE law approximates an inverse-square law and has been chosen based on analysis of the various transformers’ overexcitation capability characteristics. They can match the transformer core capability well.

The inverse-square law is according to equation 81.

$$t_{op} = \frac{0.18 \cdot TD}{\left(\frac{M}{PUV/Hz} - 1\right)^2} = \frac{0.18 \cdot TD}{overexcitation^2}$$

(Equation 81)

where:

M	the relative excitation
Pickup1	Operate level of over-excitation function at no load in % of (/f_{rated})
TD	is time multiplier for inverse time functions, see figure 83.

The relative excitation M is calculated using equation82

$$M = \frac{\left(\frac{V_{measured}}{f_{measured}}\right)}{\left(\frac{VBase}{f_{rated}}\right)} = \frac{V_{measured}}{VBase} \cdot \frac{f_{rated}}{f_{measured}}$$

(Equation 82)

Inverse delays as per figure 83, can be modified (limited) by a special definite delay setting *t_MinTripDelay*, see figure 82.

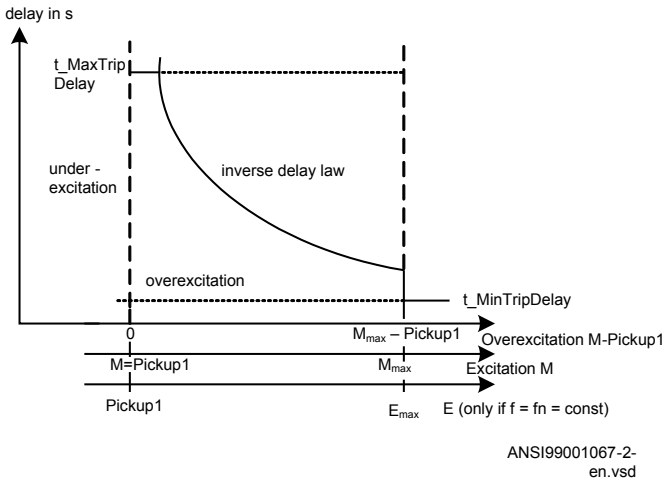

Figure 82: Restrictions imposed on inverse delays by

A definite maximum time of 1800 seconds can be used to limit the operate time at low degrees of overexcitation of *Pickup1*. Inverse delays longer than 1800 seconds will not

be allowed. In case the inverse delay is longer than 1800 seconds, OEXPVPH (24) trips *t_MaxTripDelay*, see figure 82.

A definite minimum time, *t_MinTripDelay*, can be used to limit the operate time at high degrees of overexcitation for *Pickup1*. In case the inverse delay is shorter than *t_MinTripDelay*, OEXPVPH (24) function trips after *t_MinTripDelay* seconds.

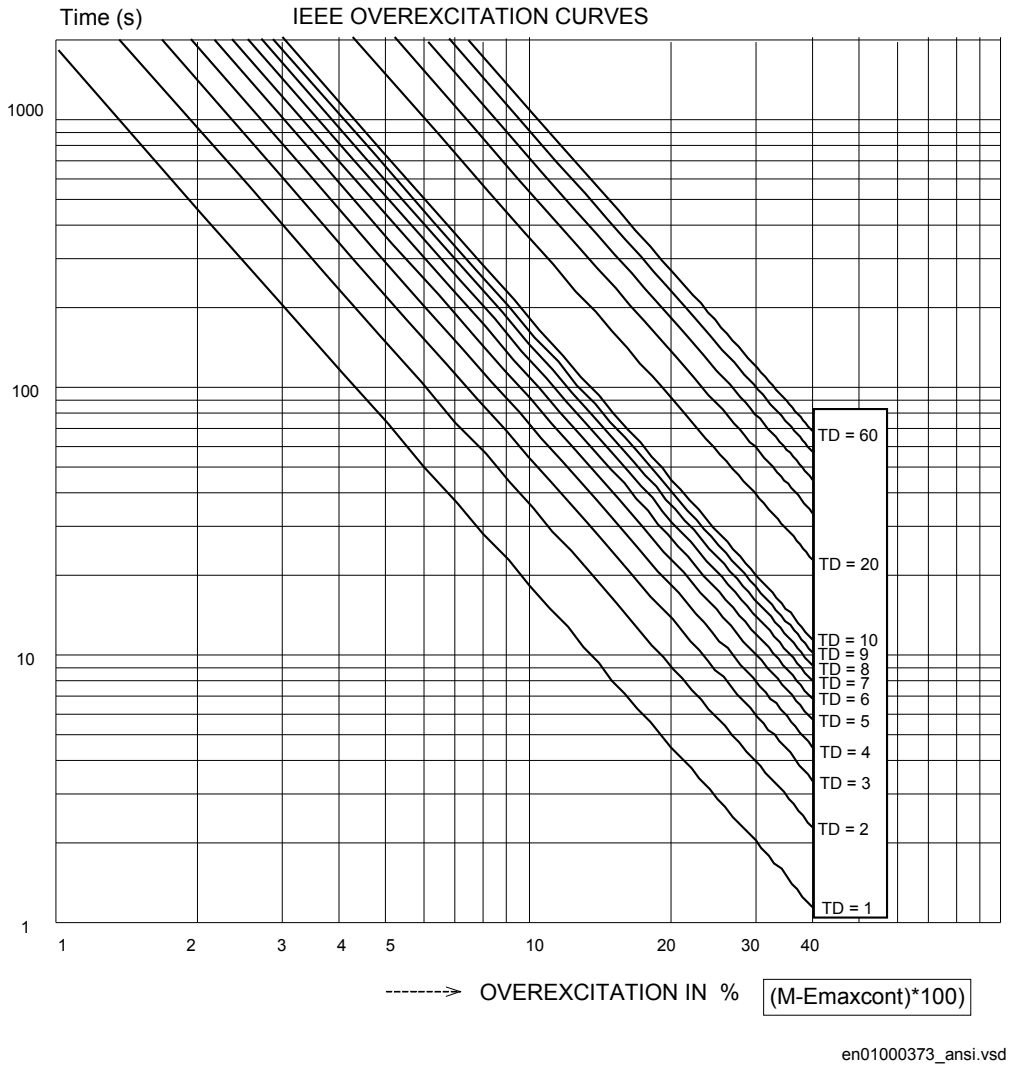

Figure 83: Delays inversely proportional to the square of the overexcitation

The critical value of excitation M is determined via OEXPVPH (24) setting *Pickup2*. *Pickup2* can be thought of as a no-load voltage at rated frequency, where the inverse law should be replaced by a short definite delay, *t_MinTripDelay*. If, for example, *Pickup2* = 140 %, then M is according to equation 83.

$$M = \frac{(Pickup2/f)}{Vn/fn} = 1.40$$

(Equation 83)

8.4.7.3 Cooling

Overexcitation protection function (OEXPVPH, 24) is basically a thermal protection; therefore a cooling process has been introduced. Exponential cooling process is applied, with a default time constant of 20 minutes. This means that if the voltage and frequency return to normal values (no more overexcitation), the normal temperature is assumed to be reached not before approximately 5 times the default time constant of 20 minutes. If an overexcitation condition would return before that, the time to trip will be shorter than it would be otherwise.

8.4.7.4 Overexcitation protection function measurands

A monitored data value, TMTOTRIP, is available on the local HMI and in PCM600. This value is an estimation of the remaining time to trip (in seconds), if the overexcitation remained on the level it had when the estimation was done. This information can be useful during small or moderate overexcitations.

The relative excitation M, shown on the local HMI and in PCM600 has a monitored data value VPERHZ, is calculated from the expression:

$$M(p.u.) = \frac{E/f}{Vn/fn}$$

(Equation 84)

If VPERHZ value is less than setting *Pickup1* (in %), the power transformer is underexcited. If VPERHZ is equal to *Pickup1* (in %), the excitation is exactly equal to the power transformer continuous capability. If VPERHZ is higher than *Pickup1*, the protected power transformer is overexcited. For example, if VPERHZ = 1.100, while *Pickup1* = 110 %, then the power transformer is exactly on its maximum continuous excitation limit.

Monitored data value THERMSTA shows the thermal status of the protected power transformer iron core. THERMSTA gives the thermal status in % of the trip value which corresponds to 100%. THERMSTA should reach 100% at the same time, as TMTOTRIP reaches 0 seconds. If the protected power transformer is then for some reason not switched off, THERMSTA shall go over 100%.

If the delay as per IEEE law, is limited by *t_MinTripDelay*, then THERMSTA will generally not reach 100% at the same time, as TMTOTRIP reaches 0 seconds. Also, if,

at low degrees of overexcitation, the very long delay is limited by 30 minutes, then the TRIP output signal of OEXPVPH (24) will be set to 1 and TMTOTRIP will reach 0 seconds before THERMSTA reaches 100%.

8.4.7.5 Overexcitation alarm

A separate step, *AlarmPickup*, is provided for alarming purpose. It is normally set 2% lower than (*Pickup1*) and has a definite time delay, *tAlarm*. This will give the operator an early abnormal voltages warning.

8.4.7.6 Logic diagram

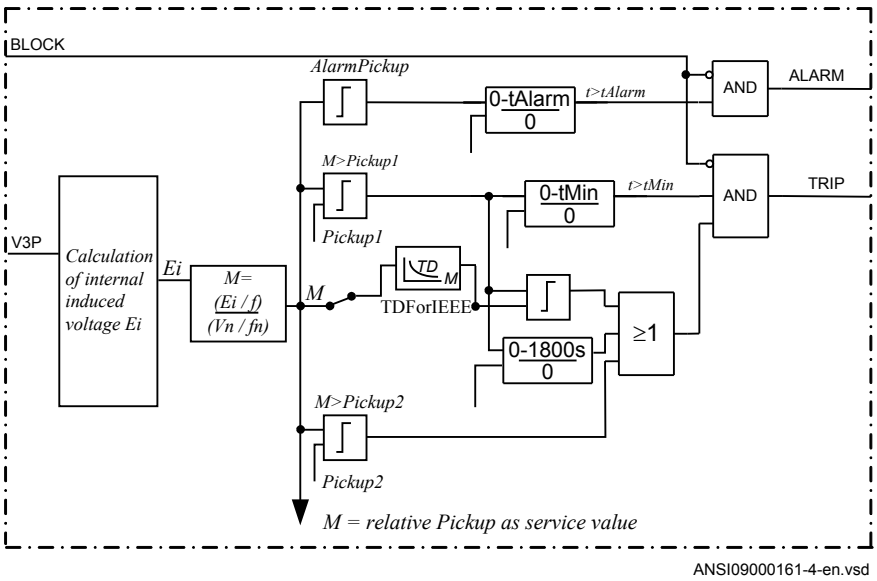

Figure 84: A simplified logic diagram of the Overexcitation protection OEXPVPH (24)

Simplification of the diagram is in the way the IEEE delays are calculated. The cooling process is not shown. It is not shown that voltage and frequency are separately checked against their respective limit values.

8.4.8 Technical data

Table 134: OEXPVPH (24) technical data

Function	Range or value	Accuracy
Pickup value, pickup	(100–180)% of (*VBase*/f_n)	± 0.5% of V
Pickup value, alarm	(50–120)% of pickup level	± 0.5% of V_n at V ≤ V_n ± 0.5% of V at V > V_n
Pickup value, high level	(100–200)% of (*VBase*/f_n)	± 0.5% of V
Curve type	IEEE $IEEE: t = \frac{(0.18 \cdot TD)}{(M-1)^2}$ (Equation 85) where M = (E/f)/(Vn/fn)	± 5% + 40 ms
Minimum time delay for inverse function	(0.000–60.000) s	± 0.5% ± 25 ms
Alarm time delay	(0.000–60.000) s	± 0.5% ± 25 ms

Section 9 Frequency protection

9.1 Underfrequency protection SAPTUF (81)

9.1.1 Identification

Function description	IEC 61850 identification	IEC 60617 identification	ANSI/IEEE C37.2 device number
Underfrequency protection	SAPTUF	*f* <	81

9.1.2 Functionality

Underfrequency occurs as a result of a lack of sufficient generation in the network.

Underfrequency protection SAPTUF (81) is used for load shedding systems, remedial action schemes, gas turbine startup and so on.

SAPTUF (81) is also provided with undervoltage blocking.

9.1.3 Function block

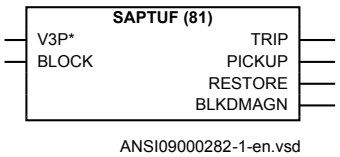

Figure 85: SAPTUF (81) function block

9.1.4 Signals

Table 135: SAPTUF (81) Input signals

Name	Type	Default	Description
V3P	GROUP SIGNAL	-	Three phase group signal for voltage inputs
BLOCK	BOOLEAN	0	Block of function

Table 136: SAPTUF (81) Output signals

Name	Type	Description
TRIP	BOOLEAN	Common trip signal
PICKUP	BOOLEAN	General pickup signal
RESTORE	BOOLEAN	Restore signal for load restoring purposes
BLKDMAGN	BOOLEAN	Measurement blocked due to low voltage amplitude

9.1.5 Settings

Table 137: SAPTUF (81) Group settings (basic)

Name	Values (Range)	Unit	Step	Default	Description
Operation	Disabled Enabled	-	-	Disabled	Disable/Enable Operation
PUFrequency	35.00 - 75.00	Hz	0.01	48.80	Frequency set value
tDelay	0.000 - 60.000	s	0.001	0.200	Operate time delay
tRestore	0.000 - 60.000	s	0.001	0.000	Restore time delay
RestoreFreq	45.00 - 65.00	Hz	0.01	49.90	Restore frequency if frequency is above frequency value

9.1.6 Monitored data

Table 138: SAPTUF (81) Monitored data

Name	Type	Values (Range)	Unit	Description
FREQ	REAL	-	Hz	Measured frequency

9.1.7 Operation principle

Underfrequency protection (SAPTUF, 81) function is used to detect low power system frequency. If the frequency remains below the set value for a time period greater than

the set time delay the TRIP signal is issued. To avoid an unwanted trip due to uncertain frequency measurement at low voltage magnitude, a voltage controlled blocking of the function is available from the preprocessing function, that is, if the voltage is lower than the set blocking voltage in the preprocessing function, the function is blocked and no PICKUP or TRIP signal is issued.

9.1.7.1 Measurement principle

The frequency measuring element continuously measures the frequency of the positive sequence voltage and compares it to the setting *PUFrequency*. The frequency signal is filtered to avoid transients due to switchings and faults in the power system. If the voltage magnitude decreases below the setting *MinValFreqMeas* in the SMAI preprocessing function, which is described in the Basic IED Functions chapter and is set as a percentage of a global base voltage parameter, SAPTUF (81) gets blocked, and the output BLKDMAGN is issued. All voltage settings are made in percent of the setting of the global parameter *VBase*.

To avoid oscillations of the output PICKUP signal, a hysteresis has been included.

9.1.7.2 Time delay

The time delay for SAPTUF (81) is a settable definite time delay, specified by the setting *tDelay*.

Trip signal issuing requires that the under frequency condition continues for at least the user set time delay. If the PICKUP ceases during the delay time, and is not fulfilled again within a defined reset time, the PICKUP output is reset.

When the measured frequency returns to the level corresponding to the setting *RestoreFreq*, a 100ms pulse is given on the output RESTORE after a settable time delay (*tRestore*).

9.1.7.3 Blocking

It is possible to block underfrequency protection SAPTUF (81) completely, by binary input signal:

BLOCK:	blocks all outputs

If the measured voltage level decreases below the setting of *MinValFreqMeas* in the preprocessing function, both the PICKUP and the TRIP outputs, are blocked.

9.1.7.4 Design

The design of underfrequency protection SAPTUF (81) is schematically described in figure 86.

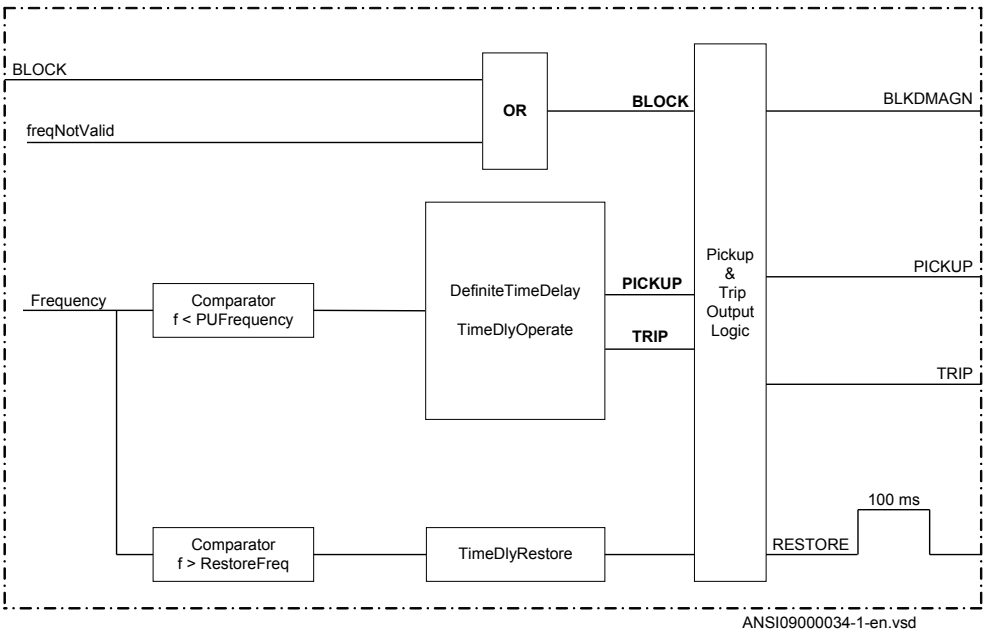

Figure 86: Simplified logic diagram for SAPTUF (81)

9.1.8 Technical data

Table 139: SAPTUF (81) Technical data

Function	Range or value	Accuracy
Operate value, pickup function	(35.00-75.00) Hz	± 2.0 mHz
Operate value, restore frequency	(45 - 65) Hz	± 2.0 mHz
Reset ratio	<1.001	-
Operate time, pickup function	At 50 Hz: 200 ms typically at f_{set} +0.5 Hz to f_{set} -0.5 Hz At 60 Hz: 170 ms typically at f_{set} +0.5 Hz to f_{set} -0.5 Hz	-
Reset time, pickup function	At 50 Hz: 60 ms typically at f_{set} -0.5 Hz to f_{set} +0.5 Hz At 60 Hz: 50 ms typically at f_{set} -0.5 Hz to f_{set} +0.5 Hz	-
Operate time delay	(0.000-60.000)s	<250 ms
Restore time delay	(0.000-60.000)s	<150 ms

9.2 Overfrequency protection SAPTOF (81)

9.2.1 Identification

Function description	IEC 61850 identification	IEC 60617 identification	ANSI/IEEE C37.2 device number
Overfrequency protection	SAPTOF	*f* >	81

9.2.2 Functionality

Overfrequency protection function SAPTOF (81) is applicable in all situations, where reliable detection of high fundamental power system frequency is needed.

Overfrequency occurs because of sudden load drops or shunt faults in the power network. Close to the generating plant, generator governor problems can also cause over frequency.

SAPTOF (81) is used mainly for generation shedding and remedial action schemes. It is also used as a frequency stage initiating load restoring.

SAPTOF (81) is provided with an undervoltage blocking.

9.2.3 Function block

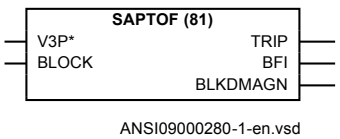

Figure 87: SAPTOF (81) function block

9.2.4 Signals

Table 140: SAPTOF (81) Input signals

Name	Type	Default	Description
V3P	GROUP SIGNAL	-	Three phase group signal for voltage inputs
BLOCK	BOOLEAN	0	Block of function

Table 141: SAPTOF (81) Output signals

Name	Type	Description
TRIP	BOOLEAN	Common trip signal
BFI	BOOLEAN	General pickup signal
BLKDMAGN	BOOLEAN	Measurement blocked due to low amplitude

9.2.5 Settings

Table 142: SAPTOF (81) Group settings (basic)

Name	Values (Range)	Unit	Step	Default	Description
Operation	Disabled Enabled	-	-	Disabled	Operation Disable / Enable
PUFrequency	35.00 - 75.00	Hz	0.01	51.20	Frequency set value
tDelay	0.000 - 60.000	s	0.001	0.200	Operate time delay

9.2.6 Monitored data

Table 143: SAPTOF (81) Monitored data

Name	Type	Values (Range)	Unit	Description
FREQ	REAL	-	Hz	Measured frequency

9.2.7 Operation principle

Overfrequency protection SAPTOF (81) is used to detect high power system frequency. SAPTOF (81) has a settable definite time delay. If the frequency remains above the set value for a time period greater than the set time delay the TRIP signal is issued. To avoid an unwanted TRIP due to uncertain frequency measurement at low voltage magnitude, a voltage controlled blocking of the function is available from the preprocessing function, that is, if the voltage is lower than the set blocking voltage in the preprocessing function, the function is blocked and no PICKUP or TRIP signal is issued.

9.2.7.1 Measurement principle

The frequency measuring element continuously measures the frequency of the positive sequence voltage and compares it to the setting *PUFrequency*. The frequency signal is filtered to avoid transients due to switchings and faults in the power system. If the voltage magnitude decreases below the setting *MinValFreqMeas* in the SMAI

preprocessing function, which is discussed in the Basic IED Functions chapter and is set as a percentage of a global base voltage parameter *VBase*, SAPTOF (81) is blocked, and the output BLKDMAGN is issued. All voltage settings are made in percent of the global parameter *VBase*. To avoid oscillations of the output PICKUP signal, a hysteresis has been included.

9.2.7.2 Time delay

The time delay for SAPTOF (81) is a settable definite time delay, specified by the setting *tDelay*.

If the PICKUP condition frequency ceases during the delay time, and is not fulfilled again within a defined reset time, the PICKUP output is reset.

9.2.7.3 Blocking

It is possible to block Over frequency protection (SAPTOF, 81) completely, by binary input signals or by parameter settings, where:

BLOCK: blocks all outputs

If the measured voltage level decreases below the setting of *MinValFreqMeas* in the preprocessing function Signal Matrix for analog inputs (SMAI), both the PICKUP and the TRIP outputs, are blocked.

9.2.7.4 Design

The design of overfrequency protection SAPTOF (81) is schematically described in figure 88.

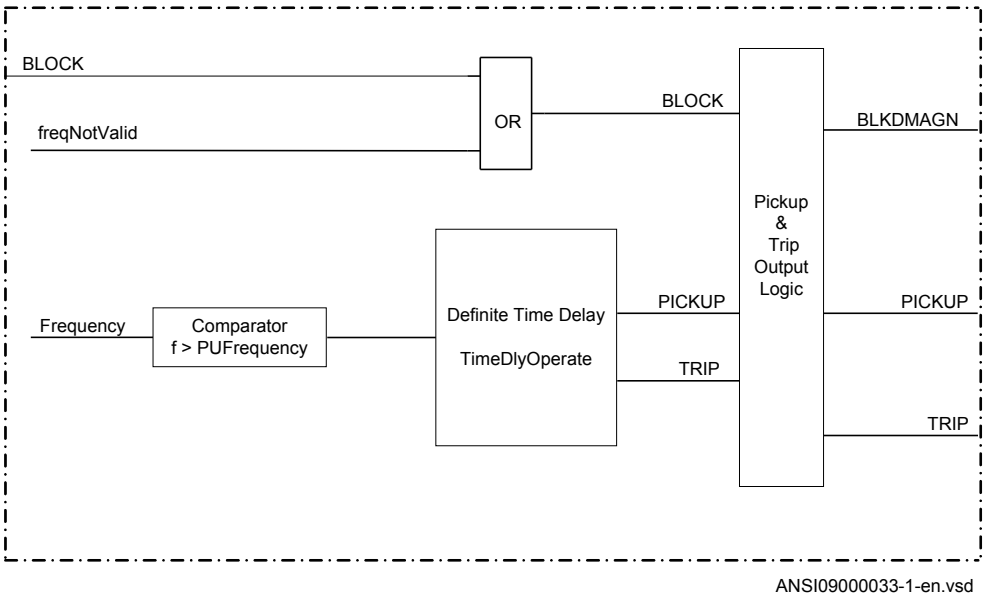

Figure 88: Schematic design of overfrequency protection SAPTOF (81)

9.2.8 Technical data

Table 144: SAPTOF (81) technical data

Function	Range or value	Accuracy
Operate value, pickup function	(35.00-75.00) Hz	± 2.0 mHz at symmetrical three-phase voltage
Reset ratio	>0.999	-
Operate time, pickup function	At 50 Hz: 200 ms typically at f_{set} -0.5 Hz to f_{set} +0.5 Hz At 60 Hz: 170 ms typically at f_{set} -0.5 Hz to f_{set} +0.5 Hz	-
Reset time, pickup function	At 50 and 60 Hz: 55 ms typically at f_{set} +0.5 Hz to f_{set}-0.5 Hz	-
Timer	(0.000-60.000)s	<250 ms

9.3 Rate-of-change frequency protection SAPFRC (81)

9.3.1 Identification

Function description	IEC 61850 identification	IEC 60617 identification	ANSI/IEEE C37.2 device number
Rate-of-change frequency protection	SAPFRC	*df/dt* ≷	81

9.3.2 Functionality

Rate-of-change frequency protection function (SAPFRC,81) gives an early indication of a main disturbance in the system. SAPFRC (81) can be used for generation shedding, load shedding and remedial action schemes. SAPFRC (81) can discriminate between positive or negative change of frequency.

SAPFRC (81) is provided with an undervoltage blocking.

9.3.3 Function block

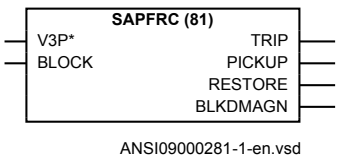

Figure 89: SAPFRC (81) function block

9.3.4 Signals

Table 145: SAPFRC (81) Input signals

Name	Type	Default	Description
V3P	GROUP SIGNAL	-	Three phase group signal for voltage inputs
BLOCK	BOOLEAN	0	Block of function

Table 146: SAPFRC (81) Output signals

Name	Type	Description
TRIP	BOOLEAN	Operate/trip signal for frequency gradient
PICKUP	BOOLEAN	Start/pick-up signal for frequency gradient
RESTORE	BOOLEAN	Restore signal for load restoring purposes
BLKDMAGN	BOOLEAN	Blocking indication due to low magnitude

9.3.5 Settings

Table 147: SAPFRC (81) Group settings (basic)

Name	Values (Range)	Unit	Step	Default	Description
Operation	Disabled Enabled	-	-	Disabled	Disable/Enable Operation
PUFreqGrad	-10.00 - 10.00	Hz/s	0.01	0.50	Frequency gradient pick up value, the sign defines direction
tTrip	0.000 - 60.000	s	0.001	0.200	Operate time delay in positive / negative frequency gradient mode
RestoreFreq	45.00 - 65.00	Hz	0.01	49.90	Restore is enabled if frequency is above set frequency value
tRestore	0.000 - 60.000	s	0.001	0.000	Restore time delay

9.3.6 Operation principle

Rate-of-change frequency protection SAPFRC (81) is used to detect fast power system frequency changes, increase as well as, decrease at an early stage. SAPFRC (81) has a settable definite time delay.To avoid an unwanted trip due to uncertain frequency measurement at low voltage magnitude, a voltage controlled blocking of the function is available from the preprocessing function that is, if the voltage is lower than the set blocking voltage in the preprocessing function, the function is blocked and no PICKUP or TRIP signal is issued. If the frequency recovers, after a frequency decrease, a restore signal is issued.

9.3.6.1 Measurement principle

The rate-of-change of the fundamental frequency of the selected voltage is measured continuously, and compared with the set value, *PUFreqGrad*. If the voltage magnitude decreases below the setting *MinValFreqMeas* in the preprocessing function, which is set as a percentage of a global base voltage parameter, SAPFRC (81) is blocked, and the output BLKDMAGN is issued. The sign of the setting *PUFreqGrad*, controls if SAPFRC (81) reacts on a positive or on a negative change in frequency. If SAPFRC (81) is used for decreasing frequency that is, the setting *PUFreqGrad* has been given a

negative value, and a trip signal has been issued, then a 100 ms pulse is issued on the RESTORE output, when the frequency recovers to a value higher than the setting *RestoreFreq*. A positive setting of *PUFreqGrad*, sets SAPFRC (81) to PICKUP and TRIP for frequency increases.

To avoid oscillations of the output PICKUP signal, a hysteresis has been included.

9.3.6.2 Time delay

SAPFRC (81) has a settable definite time delay, *tTrip*.

Trip signal issuing requires that SAPFRC (81) condition continues for at least the user set time delay, *tTrip*. If the PICKUP condition, ceases during the delay time, and is not fulfilled again within a defined reset time, the PICKUP output is reset after the reset time has elapsed.

After an issue of the TRIP output signal, the RESTORE output of SAPFRC (81) is set, after a time delay *tRestore*, when the measured frequency has returned to the level corresponding to *RestoreFreq*. If *tRestore* is set to *0.000* s the restore functionality is disabled, and no output will be given. The restore functionality is only active for lowering frequency conditions and the restore sequence is disabled if a new negative frequency gradient is detected during the restore period.

9.3.6.3 Design

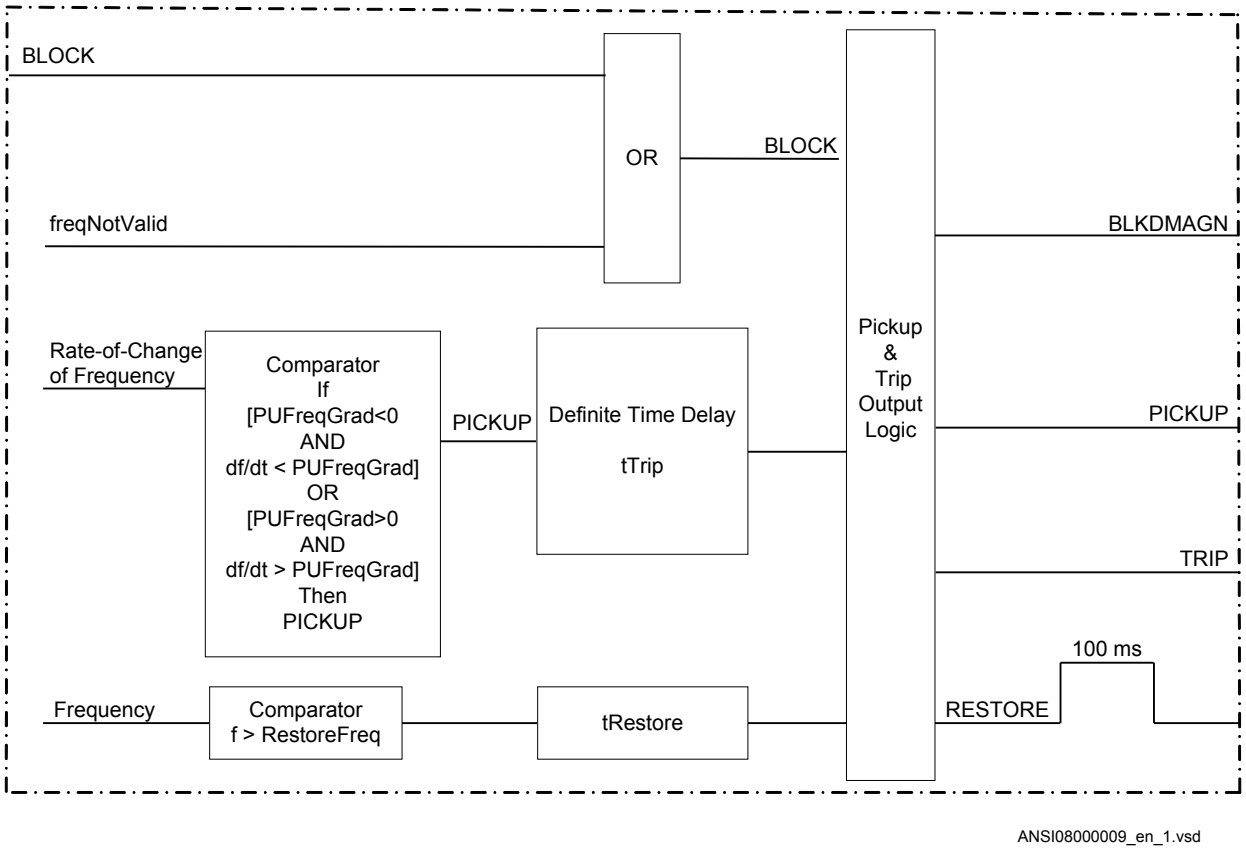

Figure 90: Schematic design of Rate-of-change frequency protection SAPFRC (81)

9.3.7 Technical data

Table 148: SAPFRC (81) technical data

Function	Range or value	Accuracy
Operate value, pickup function	(-10.00-10.00) Hz/s	± 10.0 mHz/s
Operate value, restore enable frequency	(45.00 - 65.00) Hz	± 2.0 mHz
Timers	(0.000 - 60.000) s	<130 ms
Operate time, pickup function	At 50 Hz: 100 ms typically At 60 Hz: 80 ms typically	-

Section 10 Secondary system supervision

10.1 Breaker close/trip circuit monitoring TCSSCBR

10.1.1 Identification

Function description	IEC 61850 identification	IEC 60617 identification	ANSI/IEEE C37.2 device number
Breaker close/trip circuit monitoring	TCSSCBR	-	-

10.1.2 Functionality

The trip circuit monitoring function TCSSCBR is designed for supervision of control circuits. A fault in a control circuit is detected by using a dedicated output contact that contains the monitoring functionality.

The function picks up and trips when TCSSCBR detects a trip circuit failure. The trip time characteristic for the function is of definite time (DT) type. The function trips after a predefined operating time and resets when the fault disappears.

10.1.3 Function block

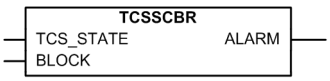

Figure 91: Function block

10.1.4 Signals

Table 149: TCSSCBR Input signals

Name	Type	Default	Description
TCS_STATE	BOOLEAN	0	Trip circuit fail indication from I/O-card
BLOCK	BOOLEAN	0	Block of function

Table 150: TCSSCBR Output signals

Name	Type	Description
ALARM	BOOLEAN	Trip circuit fault indication

10.1.5 Settings

Table 151: TCSSCBR Non group settings (basic)

Name	Values (Range)	Unit	Step	Default	Description
Operation	Disabled Enabled	-	-	Enabled	Operation Disabled/Enabled
tDelay	0.020 - 300.000	s	0.001	3.000	Operate time delay

10.1.6 Operation principle

The function can be enabled and disabled with the *Operation* setting. The corresponding parameter values are *Enable* and *Disable*.

The operation of trip circuit supervision can be described by using a module diagram. All the modules in the diagram are explained in the next sections.

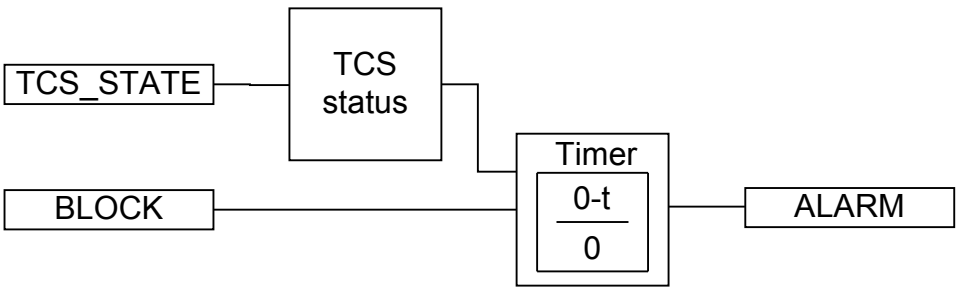

Figure 92: Functional module diagram

Trip circuit supervision generates a current of approximately 1.0 mA through the supervised circuit. It must be ensured that this current will not cause a latch up of the controlled object.

To protect the trip circuit supervision circuits in the IED, the output contacts are provided with parallel transient voltage suppressors. The breakdown voltage of these suppressors is 400 +/– 20 V DC.

Timer

The binary input BLOCK can be used to block the function. The activation of the BLOCK input deactivates the ALARM output and resets the internal timer.

10.1.7 Technical data

Table 152: TCSSCBR Technical data

Function	Range or value	Accuracy
Operate time delay	(0.020 - 300.000) s	± 0,5% ± 110 ms

Section 11 Control

11.1 Apparatus control

11.1.1 Functionality

The apparatus control functions are used for control and supervision of circuit breakers, disconnectors and grounding switches within a bay. Permission to operate is given after evaluation of conditions from other functions such as interlocking, synchronism check, operator place selection and external or internal blockings.

In normal security, the command is processed and the resulting position is not supervised. However with enhanced security, the command is processed and the resulting position is supervised.

11.1.2 Bay control QCBAY

11.1.2.1 Identification

Function description	IEC 61850 identification	IEC 60617 identification	ANSI/IEEE C37.2 device number
Bay control	QCBAY	-	-

11.1.2.2 Functionality

The Bay control QCBAY function is used together with Local remote and local remote control functions to handle the selection of the operator place per bay. QCBAY also provides blocking functions that can be distributed to different apparatuses within the bay.

11.1.2.3 Function block

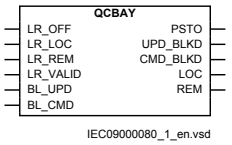

Figure 93: QCBAY function block

11.1.2.4 Signals

Table 153: QCBAY Input signals

Name	Type	Default	Description
LR_OFF	BOOLEAN	0	External Local/Remote switch is in Off position
LR_LOC	BOOLEAN	0	External Local/Remote switch is in Local position
LR_REM	BOOLEAN	0	External Local/Remote switch is in Remote position
LR_VALID	BOOLEAN	0	Data representing the L/R switch position is valid
BL_UPD	BOOLEAN	0	Steady signal to block the position updates
BL_CMD	BOOLEAN	0	Steady signal to block the command

Table 154: QCBAY Output signals

Name	Type	Description
PSTO	INTEGER	Value for the operator place allocation
UPD_BLKD	BOOLEAN	Update of position is blocked
CMD_BLKD	BOOLEAN	Function is blocked for commands
LOC	BOOLEAN	Local operation allowed
REM	BOOLEAN	Remote operation allowed

11.1.2.5 Settings

Table 155: QCBAY Non group settings (basic)

Name	Values (Range)	Unit	Step	Default	Description
AllPSTOValid	Priority No priority	-	-	Priority	Priority of originators

11.1.3 Local remote LOCREM

11.1.3.1 Identification

Function description	IEC 61850 identification	IEC 60617 identification	ANSI/IEEE C37.2 device number
Local remote	LOCREM	-	-

11.1.3.2 Functionality

The signals from the local HMI or from an external local/remote switch are applied via the function blocks LOCREM and LOCREMCTRL to the Bay control (QCBAY) function block. A parameter in function block LOCREM is set to choose if the switch signals are coming from the local HMI or from an external hardware switch connected via binary inputs.

11.1.3.3 Function block

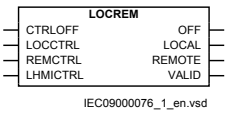

Figure 94: LOCREM function block

11.1.3.4 Signals

Table 156: LOCREM Input signals

Name	Type	Default	Description
CTRLOFF	BOOLEAN	0	Disable control
LOCCTRL	BOOLEAN	0	Local in control
REMCTRL	BOOLEAN	0	Remote in control
LHMICTRL	INTEGER	0	LHMI control

Table 157: LOCREM Output signals

Name	Type	Description
OFF	BOOLEAN	Control is disabled
LOCAL	BOOLEAN	Local control is activated
REMOTE	BOOLEAN	Remote control is activated
VALID	BOOLEAN	Outputs are valid

11.1.3.5 Settings

Table 158: LOCREM Non group settings (basic)

Name	Values (Range)	Unit	Step	Default	Description
ControlMode	Internal LR-switch External LR-switch	-	-	Internal LR-switch	Control mode for internal/external LR-switch

11.1.4 Local remote control LOCREMCTRL

11.1.4.1 Identification

Function description	IEC 61850 identification	IEC 60617 identification	ANSI/IEEE C37.2 device number
Local remote control	LOCREMCTRL	-	-

11.1.4.2 Functionality

The signals from the local HMI or from an external local/remote switch are applied via the function blocks LOCREM and LOCREMCTRL to the Bay control (QCBAY) function block. A parameter in function block LOCREM is set to choose if the switch signals are coming from the local HMI or from an external hardware switch connected via binary inputs.

11.1.4.3 Function block

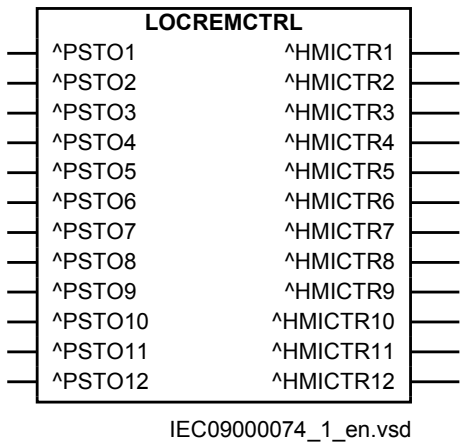

Figure 95: LOCREMCTRL function block

11.1.4.4 Signals

Table 159: LOCREMCTRL Input signals

Name	Type	Default	Description
PSTO1	INTEGER	0	PSTO input channel 1
PSTO2	INTEGER	0	PSTO input channel 2
PSTO3	INTEGER	0	PSTO input channel 3
PSTO4	INTEGER	0	PSTO input channel 4
PSTO5	INTEGER	0	PSTO input channel 5
PSTO6	INTEGER	0	PSTO input channel 6
PSTO7	INTEGER	0	PSTO input channel 7
PSTO8	INTEGER	0	PSTO input channel 8
PSTO9	INTEGER	0	PSTO input channel 9
PSTO10	INTEGER	0	PSTO input channel 10
PSTO11	INTEGER	0	PSTO input channel 11
PSTO12	INTEGER	0	PSTO input channel 12

Table 160: LOCREMCTRL Output signals

Name	Type	Description
HMICTR1	INTEGER	Bitmask output 1 to local remote LHMI input
HMICTR2	INTEGER	Bitmask output 2 to local remote LHMI input
HMICTR3	INTEGER	Bitmask output 3 to local remote LHMI input
HMICTR4	INTEGER	Bitmask output 4 to local remote LHMI input
HMICTR5	INTEGER	Bitmask output 5 to local remote LHMI input
HMICTR6	INTEGER	Bitmask output 6 to local remote LHMI input
HMICTR7	INTEGER	Bitmask output 7 to local remote LHMI input
HMICTR8	INTEGER	Bitmask output 8 to local remote LHMI input
HMICTR9	INTEGER	Bitmask output 9 to local remote LHMI input
HMICTR10	INTEGER	Bitmask output 10 to local remote LHMI input
HMICTR11	INTEGER	Bitmask output 11 to local remote LHMI input
HMICTR12	INTEGER	Bitmask output 12 to local remote LHMI input

11.1.4.5 Settings

The function does not have any parameters available in Local HMI or Protection and Control IED Manager (PCM600).

11.1.5 Operation principle

11.1.5.1 Bay control QCBAY

The functionality of the Bay control (QCBAY) function is not defined in the IEC 61850–8–1 standard, which means that the function is a vendor specific logical node.

The function sends information about the Permitted Source To Operate (PSTO) and blocking conditions to other functions within the bay for example, switch control functions, voltage control functions and measurement functions.

Local panel switch

The local panel switch is a switch that defines the operator place selection. The switch connected to this function can have three positions remote/local/off. The positions are here defined so that remote means that operation is allowed from station/remote level and local from the IED level. The local/remote switch is also on the control/protection IED itself, which means that the position of the switch and its validity information are connected internally, and not via I/O boards. When the switch is mounted separately from the IED the signals are connected to the function via I/O boards.

When the local panel switch (or LHMI selection, depending on the set source to select this) is in Off position, all commands from remote and local level will be ignored. If the position for the local/remote switch is not valid the PSTO output will always be set to faulty state (3), which means no possibility to operate.

To adapt the signals from the local HMI or from an external local/remote switch, the function blocks LOCREM and LOCREMCTRL are needed and connected to QCBAY.

Permitted Source To Operate (PSTO)

The actual state of the operator place is presented by the value of the Permitted Source To Operate, PSTO signal. The PSTO value is evaluated from the local/remote switch position according to table 161. In addition, there is one configuration parameter that affects the value of the PSTO signal. If the parameter *AllPSTOValid* is set and LR-switch position is in Local or Remote state, the PSTO value is set to 5 (all), that is, it is permitted to operate from both local and remote level without any priority. When the external panel switch is in Off position the PSTO value shows the actual state of switch that is, 0. In this case it is not possible to control anything.

Table 161: PSTO values for different Local panel switch positions

Local panel switch positions	PSTO value	AllPSTOValid (configuration parameter)	Possible locations that shall be able to operate
0 = Off	0	--	Not possible to operate
1 = Local	1	FALSE	Local Panel
1 = Local	5	TRUE	Local or Remote level without any priority
2 = Remote	2	FALSE	Remote level
2 = Remote	5	TRUE	Local or Remote level without any priority
3 = Faulty	3	--	Not possible to operate

Blockings

The blocking states for position indications and commands are intended to provide the possibility for the user to make common blockings for the functions configured within a complete bay.

The blocking facilities provided by the bay control function are the following:

- Blocking of position indications, BL_UPD. This input will block all inputs related to apparatus positions for all configured functions within the bay.
- Blocking of commands, BL_CMD. This input will block all commands for all configured functions within the bay.
- Blocking of function, BLOCK, signal from DO (Data Object) Behavior (IEC 61850–8–1). If DO Behavior is set to "blocked" it means that the function is active, but no outputs are generated, no reporting, control commands are rejected and functional and configuration data is visible.

The switching of the Local/Remote switch requires at least system operator level. The password will be requested at an attempt to operate if authority levels have been defined in the IED. Otherwise the default authority level, SuperUser, can handle the control without LogOn. The users and passwords are defined in PCM600.

11.1.5.2 Local remote/Local remote control LOCREM/LOCREMCTRL

The function block Local remote (LOCREM) handles the signals coming from the local/remote switch. The connections are seen in figure 96, where the inputs on function block LOCREM are connected to binary inputs if an external switch is used. When the local HMI is used, the inputs are not used and are set to FALSE in the configuration. The outputs from the LOCREM function block control the output PSTO (Permitted Source To Operate) on Bay control (QCBAY).

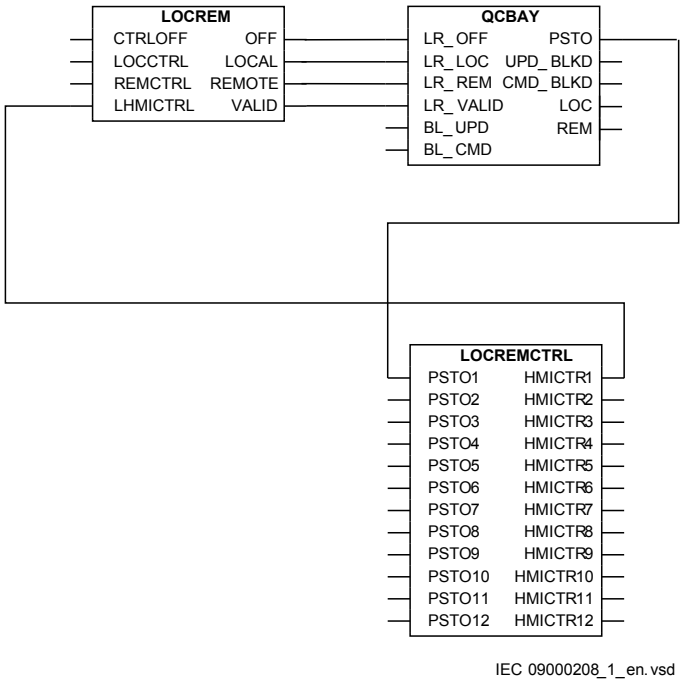

Figure 96: Configuration for the local/remote handling for a local HMI with one bay and one screen page

The switching of the local/remote switch requires at least system operator level. The password will be requested at an attempt to operate if authority levels have been defined in the IED. Otherwise the default authority level, SuperUser, can handle the control without LogOn. The users and passwords are defined in PCM600.

11.2 Voltage control

11.2.1 Functionality

Automatic voltage control for tap changer TR8ATCC (90) and Tap changer control and supervision, 6 binary inputs TCMYLTC (84) are used for control of power transformers with a on-load tap changer. The functions provide automatic regulation of the voltage on the secondary side of transformers or alternatively on a load point further out in the network.

Control of a single transformer, as well as control of up to two transformers within a single RET650, or parallel control of up to four transformers in two or even four separate RET650 is possible. Note that the last alternative is achieved by using the GOOSE interbay communication on the IEC 61850-8-1 protocol. For parallel control

of power transformers, three alternative methods are available, the master-follower method, the circulating current method and the reverse reactance method.

Voltage control includes many extra features such as possibility of to avoid simultaneous tapping of parallel transformers, extensive tap changer monitoring including contact wear and hunting detection, monitoring of the power flow in the transformer so that for example, the voltage control can be blocked if the power reverses etc.

In manual operating mode it is possible to give raise- or lower-commands to the load tap changer from the local HMI. Such facilities are pre-made in the factory.

The Automatic voltage control for tap changer TR8ATCC (90) function controls the voltage on the LV side of a transformer either automatically or manually. The automatic control can be either for a single transformer, or for a group of parallel transformers.

The Tap changer control and supervision, 6 binary inputs (TCMYLTC, 84) gives the tap commands to the tap changer, and supervises that commands are carried through correctly. It has built-in extensive possibilities for tap changer position measurement, as well as supervisory and monitoring features. This is used in the voltage control and can also give information about tap position to the transformer differential protection.

11.2.2 Automatic voltage control for tapchanger, parallel control TR8ATCC (90)

11.2.2.1 Identification

Function description	IEC 61850 identification	IEC 60617 identification	ANSI/IEEE C37.2 device number
Automatic voltage control for tap changer	TR8ATCC	U↕I	90

11.2.2.2 Function block

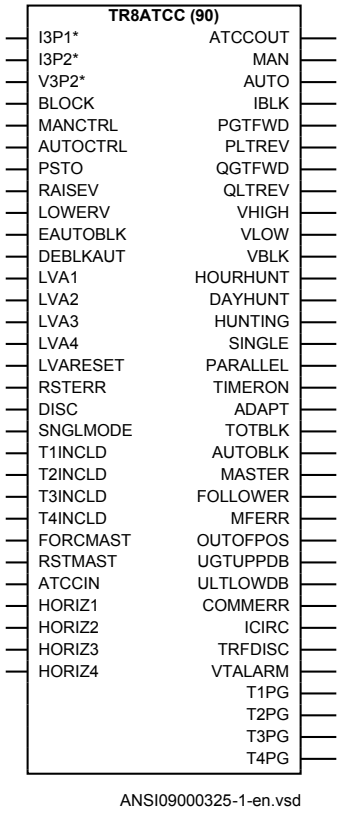

Figure 97: TR8ATCC (90) function block

11.2.2.3 Signals

Table 162: TR8ATCC (90) Input signals

Name	Type	Default	Description
I3P1	GROUP SIGNAL	-	Input group for current on HV side
I3P2	GROUP SIGNAL	-	Input group for current on LV side
V3P2	GROUP SIGNAL	-	Input group for voltage on LV side
BLOCK	BOOLEAN	0	Block of function
MANCTRL	BOOLEAN	0	Binary "MAN" command
AUTOCTRL	BOOLEAN	0	Binary "AUTO" command
PSTO	INTEGER	0	Operator place selection
Table continues on next page			

Name	Type	Default	Description
RAISEV	BOOLEAN	0	Binary "UP" command
LOWERV	BOOLEAN	0	Binary "DOWN" command
EAUTOBLK	BOOLEAN	0	Block voltage control in automatic control mode
DEBLKAUT	BOOLEAN	0	Binary "Deblock Auto" command
LVA1	BOOLEAN	0	Activation of load voltage adjustment factor 1
LVA2	BOOLEAN	0	Activation of load voltage adjustment factor 2
LVA3	BOOLEAN	0	Activation of load voltage adjustment factor 3
LVA4	BOOLEAN	0	Activation of load voltage adjustment factor 4
LVARESET	BOOLEAN	0	Reset LVA
RSTERR	BOOLEAN	0	Resets automatic control commands
DISC	BOOLEAN	0	Disconnected transformer
SNGLMODE	BOOLEAN	0	Voltage control in single control
T1INCLD	BOOLEAN	0	Transformer1 included in parallel group
T2INCLD	BOOLEAN	0	Transformer2 included in parallel group
T3INCLD	BOOLEAN	0	Transformer3 included in parallel group
T4INCLD	BOOLEAN	0	Transformer4 included in parallel group
FORCMAST	BOOLEAN	0	Force transformer to master
RSTMAST	BOOLEAN	0	Reset forced master transformer to default
ATCCIN	GROUP SIGNAL	-	Group connection from YLTCOUT
HORIZ1	GROUP SIGNAL	-	Group connection for horizontal communication from T1
HORIZ2	GROUP SIGNAL	-	Group connection for horizontal communication from T2
HORIZ3	GROUP SIGNAL	-	Group connection for horizontal communication from T3
HORIZ4	GROUP SIGNAL	-	Group connection for horizontal communication from T4

Table 163: TR8ATCC (90) Output signals

Name	Type	Description
ATCCOUT	GROUP SIGNAL	Group connection to YLTCIN
MAN	BOOLEAN	Manual control mode is active
AUTO	BOOLEAN	Automatic control mode is active
IBLK	BOOLEAN	One phase current is above the set limit
PGTFWD	BOOLEAN	Active power above the set limit powerActiveForw
PLTREV	BOOLEAN	Active power below the set limit powerActiveRev
QGTFWD	BOOLEAN	Reactive power above the set limit powerReactiveForw
Table continues on next page		

Name	Type	Description
QLTREV	BOOLEAN	Reactive power below the set limit powerReactiveRev
VHIGH	BOOLEAN	Busbar voltage above the set limit voltBusbMaxLimit
VLOW	BOOLEAN	Busbar voltage below the set limit voltBusbMinLimit
VBLK	BOOLEAN	Busbar voltage below the set limit voltBusbBlockLimit
HOURHUNT	BOOLEAN	Number of commands within the latest hour exceeded maximum level
DAYHUNT	BOOLEAN	Number of commands within the last 24 hours exceeded maximum level
HUNTING	BOOLEAN	Number of commands in opposite direction exceeded maximum level
SINGLE	BOOLEAN	Transformer operates in single mode
PARALLEL	BOOLEAN	Transformer operates in parallel mode
TIMERON	BOOLEAN	Raise or lower command to the tap activated
ADAPT	BOOLEAN	Transformer is adapting
TOTBLK	BOOLEAN	Block of auto and manual commands
AUTOBLK	BOOLEAN	Block of auto commands
MASTER	BOOLEAN	Transformer is master
FOLLOWER	BOOLEAN	This transformer is follower
MFERR	BOOLEAN	Number of masters is different from one
OUTOFPOS	BOOLEAN	Difference in tap positions exceeded the set limit
VGTUPPDB	BOOLEAN	Voltage greater than deadband-high, ULOWER command to come
VLTLOWDB	BOOLEAN	Voltage lower than deadband-low, URAISE command to come
COMMERR	BOOLEAN	Communication error
ICIRC	BOOLEAN	Block from high circulating current
TRFDISC	BOOLEAN	Transformer is disconnected
VTALARM	BOOLEAN	VT supervision alarm
T1PG	BOOLEAN	Transformer 1 included in parallel group
T2PG	BOOLEAN	Transformer 2 included in parallel group
T3PG	BOOLEAN	Transformer 3 included in parallel group
T4PG	BOOLEAN	Transformer 4 included in parallel group

11.2.2.4 Settings

Table 164: TR8ATCC (90) Group settings (basic)

Name	Values (Range)	Unit	Step	Default	Description
Operation	Disabled Enabled	-	-	Disabled	Disable/Enable Operation
MeasMode	A B C AB BC CA PosSeq	-	-	PosSeq	Selection of measured voltage and current
TotalBlock	Disabled Enabled	-	-	Disabled	Total block of the voltage control function
AutoBlock	Disabled Enabled	-	-	Disabled	Block of the automatic mode in voltage control function
FSDMode	Disabled Auto AutoMan	-	-	Disabled	Fast step down function activation mode
tFSD	1.0 - 100.0	s	0.1	15.0	Time delay for lower command when fast step down mode is activated
Vset	85.0 - 120.0	%UB2	0.1	100.0	Voltage control set voltage, in % of rated voltage
VDeadband	0.2 - 9.0	%UB2	0.1	1.2	Outer voltage deadband, in % of rated voltage
VDeadbandInner	0.1 - 9.0	%UB2	0.1	0.9	Inner voltage deadband, in % of rated voltage
Vmax	80 - 180	%UB2	1	105	Upper limit of busbar voltage, in % of rated voltage
Vmin	70 - 120	%UB2	1	80	Lower limit of busbar voltage, in % of rated voltage
Vblock	50 - 120	%UB2	1	80	Undervoltage block level, % of rated voltage
t1Use	Constant Inverse	-	-	Constant	Activation of long inverse time delay
t1	3 - 1000	s	1	60	Time delay (long) for automatic control commands
t2Use	Constant Inverse	-	-	Constant	Activation of short inverse time delay
t2	1 - 1000	s	1	15	Time delay (short) for automatic control commands
t_MinTripDelay	3 - 120	s	1	5	Minimum operating time in inverse mode
OperationLDC	Disabled Enabled	-	-	Disabled	Operation line voltage drop compensation
OperCapaLDC	Disabled Enabled	-	-	Disabled	LDC compensation for capacitive load
Rline	0.00 - 150.00	ohm	0.01	0.0	Line resistance, primary values, in ohm
Xline	-150.00 - 150.00	ohm	0.01	0.0	Line reactance, primary values, in ohm

Table continues on next page

Name	Values (Range)	Unit	Step	Default	Description
LVAConst1	-20.0 - 20.0	%UB2	0.1	0.0	Constant 1 for LVA, % of regulated voltage
LVAConst2	-20.0 - 20.0	%UB2	0.1	0.0	Constant 2 for LVA, % of regulated voltage
LVAConst3	-20.0 - 20.0	%UB2	0.1	0.0	Constant 3 for LVA, % of regulated voltage
LVAConst4	-20.0 - 20.0	%UB2	0.1	0.0	Constant 4 for LVA, % of regulated voltage
VRAuto	-20.0 - 20.0	%UB2	0.1	0.0	Load voltage auto correction, in % of rated voltage
Iblock	0 - 250	%IB1	1	150	Overcurrent block level, in % of rated current
HourHuntDetect	0 - 30	Op/H	1	30	Level for number of counted raise/lower within one hour
DayHuntDetect	0 - 100	Op/D	1	100	Level for number of counted raise/lower within 24 hour
tWindowHunt	1 - 120	Min	1	60	Time window for hunting alarm, minutes
NoOpWindow	3 - 30	Op/W	1	30	Hunting detection alarm, maximum operations/ window
P>	-9999.99 - 9999.99	MW	0.01	1000	Alarm level of active power in forward direction
P<	-9999.99 - 9999.99	MW	0.01	-1000	Alarm level of active power in reverse direction
Q>	-9999.99 - 9999.99	MVAr	0.01	1000	Alarm level of reactive power in forward direction
Q<	-9999.99 - 9999.99	MVAr	0.01	-1000	Alarm level of reactive power in reverse direction
tPower	1 - 6000	s	1	10	Time delay for alarms from power supervision
OperationPAR	Disabled CC MF	-	-	Disabled	Parallel operation, Off/CirculatingCurrent/ MasterFollower
OperCCBlock	Disabled Enabled	-	-	Enabled	Enable block from circulating current supervision
CircCurrLimit	0.0 - 20000.0	%IB2	0.1	100.0	Block level for circulating current
tCircCurr	0 - 1000	s	1	30	Time delay for block from circulating current
Comp	0 - 2000	%	1	100	Compensation parameter in % for Circulating Current
OperSimTap	Disabled Enabled	-	-	Disabled	Simultaneous tapping prohibited
OperUsetPar	Disabled Enabled	-	-	Disabled	Use common voltage set point for parallel operation
VTmismatch	0.5 - 10.0	%UB2	0.1	10.0	Alarm level for VT supervision, in % of rated voltage
tVTmismatch	1 - 600	s	1	10	Time delay for VT supervision alarm
T1RXOP	Disabled Enabled	-	-	Disabled	Receive block operation from parallel transformer 1
T2RXOP	Disabled Enabled	-	-	Disabled	Receive block operation from parallel transformer 2

Table continues on next page

Name	Values (Range)	Unit	Step	Default	Description
T3RXOP	Disabled Enabled	-	-	Disabled	Receive block operation from parallel transformer 3
T4RXOP	Disabled Enabled	-	-	Disabled	Receive block operation from parallel transformer 4
TapPosOffs	-5 - 5	-	1	0	Tap position offset in relation to the master
MFPosDiffLim	1 - 20	-	1	1	Alarm for tap position difference from master
tMFPosDiff	0 - 6000	s	1	60	Time for tap position difference from master

Table 165: TR8ATCC (90) Non group settings (basic)

Name	Values (Range)	Unit	Step	Default	Description
GlobalBaseSel1	1 - 6	-	1	1	Selection of one of the Global Base Value groups, winding 1
GlobalBaseSel2	1 - 6	-	1	1	Selection of one of the Global Base Value groups, winding 2
TrfId	T1 T2 T3 T4	-	-	T1	Identity of transformer
Xr2	0.1 - 200.0	ohm	0.1	0.5	Transformer reactance in primary ohms on ATCC side
tAutoMSF	0 - 60	s	1	10	Time delay for command for auto follower
OperationAdapt	Disabled Enabled	-	-	Disabled	Enable adapt mode
MFMode	Follow Cmd Follow Tap	-	-	Follow Cmd	Select follow tap or follow command
CircCurrBk	Alarm Auto Block Auto&Man Block	-	-	Alarm	Alarm, auto block or auto&man block for high circulating current
CmdErrBk	Alarm Auto Block Auto&Man Block	-	-	Auto Block	Alarm, auto block or auto&man block for command error
OCBk	Alarm Auto Block Auto&Man Block	-	-	Auto&Man Block	Alarm, auto block or auto&man block for overcurrent
MFPosDiffBk	Alarm Auto Block	-	-	Auto Block	Alarm or auto block for tap position difference in MF
OVPartBk	Alarm Auto&Man Block	-	-	Auto&Man Block	Alarm, auto partial or auto&man partial block for overvoltage
TapChgBk	Alarm Auto Block Auto&Man Block	-	-	Auto Block	Alarm, auto block or auto&man block for tap changer error

Table continues on next page

Name	Values (Range)	Unit	Step	Default	Description
TapPosBk	Alarm Auto Block Auto&Man Block	-	-	Auto Block	Alarm, auto or auto&man block for position supervision
UVBk	Alarm Auto Block Auto&Man Block	-	-	Auto Block	Alarm, auto block or auto&man block for undervoltage
UVPartBk	Alarm Auto&Man Block	-	-	Auto&Man Block	Alarm, auto partial or auto&man partial block for undervoltage

11.2.2.5 Monitored data

Table 166: TR8ATCC (90) Monitored data

Name	Type	Values (Range)	Unit	Description
RAISE	BOOLEAN	-	-	Raise voltage order to tapchanger
LOWER	BOOLEAN	-	-	Lower voltage order to tapchanger
BUSVOLT	REAL	-	kV	Average of measured busbar voltage (service value)
VOLTDEV	REAL	-	%	Voltage deviation compared to dead band (%)
TRLDCURR	REAL	-	A	Amplitude of own load current
VSETOUT	REAL	-	kV	Voltage setpoint used in single mode (service value)
VLOAD	REAL	-	kV	Calculated compensated voltage (service value)
P	REAL	-	MW	Calculated active power (service value)
Q	REAL	-	MVAr	Calculated reactive power (service value)
IPRIM	REAL	-	A	Maximum of 3 phase currents (service value)
CCAVolt	REAL	-	kV	Circulating current adjusted voltage
VSETPAR	REAL	-	kV	Average voltage setpoint used in parallel mode
ICIRCUL	REAL	-	A	Circulating current

11.2.3 Tap changer control and supervision, 6 binary inputs TCMYLTC (84)

11.2.3.1 Identification

Function description	IEC 61850 identification	IEC 60617 identification	ANSI/IEEE C37.2 device number
Tap changer control and supervision, 6 binary inputs	TCMYLTC	↕	84

11.2.3.2 Function block

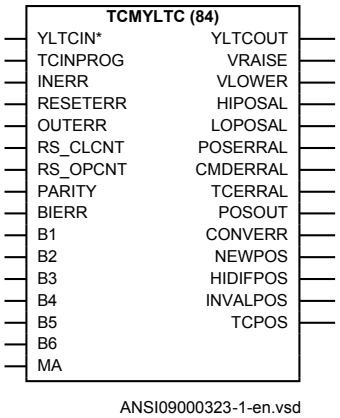

Figure 98: TCMYLTC(84) function block

11.2.3.3 Signals

TCMYLTC has no other input for tap changer position other than, binary in this release of 650 series. Input signal MA is not supported in the IED.

Table 167: TCMYLTC (84) Input signals

Name	Type	Default	Description
YLTCIN	GROUP SIGNAL	-	Group connection from ATCCOUT
TCINPROG	BOOLEAN	0	Indication that tap is moving
INERR	BOOLEAN	0	Supervision signal of the input board
RESETERR	BOOLEAN	0	Reset of command and tap error
OUTERR	BOOLEAN	0	Supervision of the digital output board
Table continues on next page			

Name	Type	Default	Description
RS_CLCNT	BOOLEAN	0	Reset of the contact life counter
RS_OPCNT	BOOLEAN	0	Resets the operation counter
PARITY	BOOLEAN	0	Parity bit from tap changer for the tap position
BIERR	BOOLEAN	0	Error bit from tap changer for the tap position
B1	BOOLEAN	0	Bit 1 from tap changer for the tap position
B2	BOOLEAN	0	Bit 2 from tap changer for the tap position
B3	BOOLEAN	0	Bit 3 from tap changer for the tap position
B4	BOOLEAN	0	Bit 4 from tap changer for the tap position
B5	BOOLEAN	0	Bit 5 from tap changer for the tap position
B6	BOOLEAN	0	Bit 6 from tap changer for the tap position
MA	REAL	0	mA from tap changer for the tap position

Table 168: TCMYLTC (84) Output signals

Name	Type	Description
YLTCOUT	GROUP SIGNAL	Group connection to ATCCIN
VRAISE	BOOLEAN	Raise voltage command to tap changer
VLOWER	BOOLEAN	Lower voltage command to tap changer
HIPOSAL	BOOLEAN	Alarm for tap in the highest volt position
LOPOSAL	BOOLEAN	Alarm for tap in the lowest volt position
POSERRAL	BOOLEAN	Alarm that indicates a problem with the position indication
CMDERRAL	BOOLEAN	Alarm for a command without an expected position change
TCERRAL	BOOLEAN	Alarm for none or illegal tap position change
POSOUT	BOOLEAN	Tap position outside range
CONVERR	BOOLEAN	General tap position conversion error
NEWPOS	BOOLEAN	A new tap position is reported, 1 sec pulse
HIDIFPOS	BOOLEAN	Tap position has changed more than one position
INVALPOS	BOOLEAN	Last position change was an invalid change
TCPOS	INTEGER	Integer value corresponding to actual tap position

11.2.3.4 Settings

Table 169: TCMYLTC (84) Group settings (basic)

Name	Values (Range)	Unit	Step	Default	Description
Operation	Disabled Enabled	-	-	Disabled	Operation Disable / Enable
tTCTimeout	1 - 120	s	1	5	Tap changer constant time-out
tPulseDur	0.5 - 10.0	s	0.1	1.5	Raise/lower command output pulse duration

Table 170: TCMYLTC (84) Non group settings (basic)

Name	Values (Range)	Unit	Step	Default	Description
GlobalBaseSel	1 - 6	-	1	1	Selection of one of the Global Base Value groups
LowVoltTap	1 - 63	-	1	1	Tap position for the lowest voltage
HighVoltTap	1 - 63	-	1	33	Tap position for the highest voltage
mALow	0.000 - 25.000	mA	0.001	4.000	mA for the lowest voltage tap position
mAHigh	0.000 - 25.000	mA	0.001	20.000	mA for the highest voltage tap position
CodeType	Binary BCD Gray ContactPerTap mA	-	-	Binary	Type of code conversion
UseParity	Disabled Enabled	-	-	Disabled	Enable parity check
tStable	1 - 60	s	1	2	Time after position change before the value is accepted
CLFactor	1.0 - 3.0	-	0.1	2.0	Adjustable factor for contact life function
InitCLCounter	0 - 9999999	s	1	250000	CL counter start value
EnabTapCmd	Disabled Enabled	-	-	Enabled	Enable commands to tap changer

11.2.3.5 Monitored data

Table 171: TCMYLTC (84) Monitored data

Name	Type	Values (Range)	Unit	Description
CNT_VAL	INTEGER	-	-	Number of operations on tap changer
CLCNT_VAL	REAL	-	-	Remaining number of operations at rated load
TCPOS	INTEGER	-	-	Integer value corresponding to actual tap position

11.2.4 Operation principle

The voltage control function is built up by two function blocks. Both are logical nodes in IEC 61850-8-1.

- Automatic voltage control for tap changer
  - TR8ATCC (90)
- Tap changer control and supervision
  - TCMYLTC (84), 6 binary inputs

TR8ATCC (90)is designed to automatically maintain the voltage at the LV-side side of a power transformer within given limits around a set target voltage. A raise or lower command is generated whenever the measured voltage, for a given period of time, deviates from the set target value by more than the preset deadband value that is, degree of insensitivity. A time-delay (inverse or definite time) is set to avoid unnecessary operation during shorter voltage deviations from the target value, and in order to coordinate with other automatic voltage controllers in the system.

TCMYLTC (84) is an interface between TR8ATCC (90) and the transformer load tap changer. More specifically this means that it receives information fromTR8ATCC (90) and based on this it gives command-pulses to a power transformer motor driven on-load tap changer and also receives information from the load tap changer regarding tap position, progress of given commands, and so on.

11.2.4.1 Automatic voltage control for tap changer TR8ATCC (90)

The LV-side of the transformer is used as the voltage measuring point. If necessary, the LV side current is used as load current to calculate the line-voltage drop to the regulation point. This current is also used when parallel control with the circulating current method is used.

In addition, all three-phase currents from the HV-winding (usually the winding where the tap changer is situated) are used by the Automatic voltage control for tap changer TR8ATCC (90) for parallel control function for over current blocking.

The setting *MeasMode* is a selection of single-phase, or phase-phase, or positive sequence quantity. It is to be used for voltage and current measurement on the LV-side. The involved phases are also selected. Thus, single-phases as well as phase-phase or three-phase feeding on the LV-side is possible but it is commonly selected for current and voltage.

The analog input signals are normally common for other functions in the IED for example, protection functions.

The LV-busbar voltage is designated VB, load current I_L and for load point voltage V_L will be used in the text to follow.

Automatic control for tap changer, parallel control TR8ATCC (90)

Parallel control of power transformers means control of two or more power transformers connected to the same busbar on the LV side and in most cases also on the HV side. Special measures must be taken in order to avoid a runaway situation where the tap changers on the parallel transformers gradually diverge and end up in opposite end positions.

Three alternative methods can be used for parallel control with Automatic control for tap changer, parallel control TR8ATCC (90):

- master-follower method
- reverse reactance method
- circulating current method.

Parallel control with the master-follower method

In the master-follower method, one of the transformers is selected to be master, and will regulate the voltage in accordance with the principles Automatic voltage control for a tap changer. Selection of the master is made by activating the binary input FORCMAST in the TR8ATCC (90) function block for one of the transformers in the group.

The followers can act in one of two alternative ways selected by a setting parameter:

1. Raise and lower commands (VRAISE and VLOWER) generated by the master, initiates the corresponding command in all follower TR8ATCCs (90) simultaneously, and consequently they will blindly follow the master commands irrespective of their individual tap positions.
2. The followers read the tap position of the master and adapt to the same tap position or to a tap position with an offset relative to the master. In this mode, the followers can also be time delayed relative to the master.

Parallel control with the reverse reactance method

In the reverse reactance method, the LDC (Line voltage drop compensation) is used. The purpose of which is normally to control the voltage at a load point further out in the network. The very same function can also be used here but with a completely different objective. Whereas the LDC, when used to control the voltage at a load point, gives a voltage drop along a line from the busbar voltage VB to a load point voltage V_L, the LDC, when used in the reverse reactance parallel control of transformers, gives a voltage increase (actually, by adjusting the ratio X_L/R_L with respect to the power

factor, the length of the vector V_L will be approximately equal to the length of VB) from VB up towards the transformer itself.

When the voltage at a load point is controlled by using LDC, the line impedance from the transformer to the load point is defined by the setting *Xline*. If a negative reactance is entered instead of the normal positive line reactance, parallel transformers will act in such a way that the transformer with a higher tap position will be the first to tap down when the busbar voltage increases, and the transformer with a lower tap position will be the first to tap up when the busbar voltage decreases. The overall performance will then be that a runaway tap situation will be avoided and that the circulating current will be minimized.

Parallel control with the circulating current method

This method requires extensive exchange of data between the TR8ATCC (90) function blocks (one TR8ATCC (90) function for each transformer in the parallel group). The TR8ATCC (90) function block can either be located in the same IED, where they are configured in PCM600 to co-operate, or in different IEDs. If the functions are located in different IEDs they must communicate via GOOSE interbay communication on the IEC 61850 communication protocol.

The main objectives of the circulating current method for parallel voltage control are:

1. Regulate the busbar or load voltage to the preset target value.
2. Minimize the circulating current in order to achieve optimal sharing of the reactive load between parallel transformers.

The busbar voltage VB is measured individually for each transformer in the parallel group by its associated TR8ATCC (90) function. These measured values will then be exchanged between the transformers, and in each TR8ATCC (90) block, the mean value of all VB values will be calculated. The resulting value V_{Bmean} will then be used in each IED instead of VB for the voltage regulation, thus assuring that the same value is used by all TR8ATCC (90) functions, and thereby avoiding that one erroneous measurement in one transformer could upset the voltage regulation. At the same time, supervision of the VT mismatch is also performed.

Figure 99 shows an example with two transformers connected in parallel. If transformer T1 has higher no load voltage it will drive a circulating current which adds to the load current in T1 and subtracts from the load current in T2.

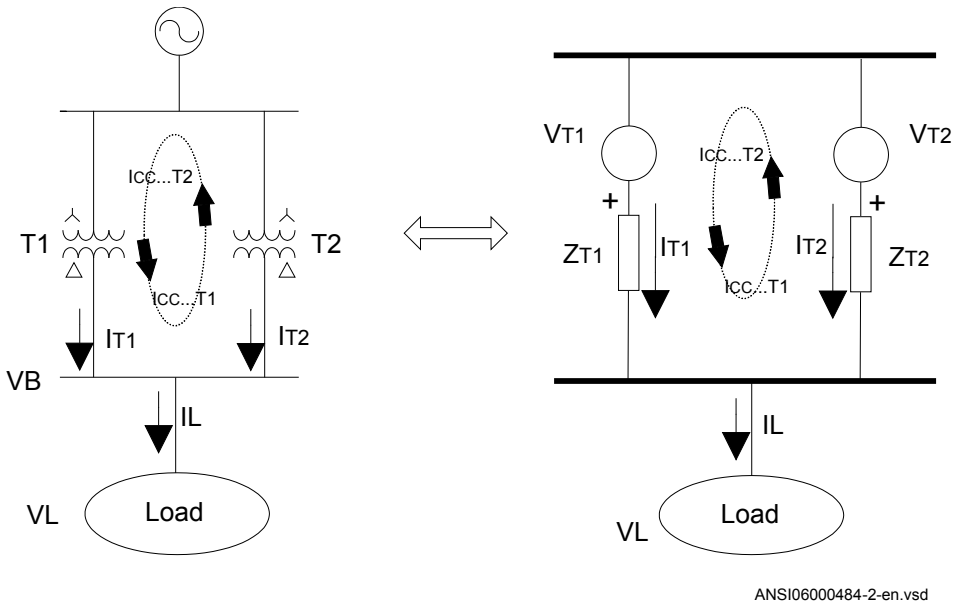

Figure 99: Circulating current in a parallel group of two transformers

It can be shown that the magnitude of the circulating current in this case can be approximately calculated with the formula:

$$\left|I_{cc\_T1}\right| = \left|I_{cc\_T2}\right| = \left|\frac{V_{T1} - V_{T2}}{Z_{T1} + Z_{T2}}\right|$$

(Equation 86)

Because the transformer impedance is dominantly inductive, it is possible to use just the transformer reactances in the above formula. At the same time this means that T1 circulating current lags the busbar voltage by almost 90°, while T2 circulating current leads the busbar voltage by almost 90°.

11.2.4.2 Tap changer control and supervision, 6 binary inputs TCMYLTC (84)

Reading of tap changer position

The tap changer position can be received to the tap changer control and supervision, 6 binary inputs TCMYLTC (84) function block in the following ways:

1. Via binary input signals, one per tap position (max. 6 positions).
2. Via coded binary (Binary), binary coded decimal (BCD) signals, or Gray coded binary signals.

Via binary input signals, one per tap position

In this option, each tap position has a separate contact that is hard wired to a binary input in the IED. Via the Signal Matrix tool in PCM600, the contacts on the binary input card are then directly connected to the

- inputs B1 – B6 on TCMYLTC (84) function

Via coded binary (Binary), binary coded decimal (BCD) signals or Gray coded binary signals

The Tap changer control and supervision, (TCMYLTC ,84) decodes binary data from up to six binary inputs to an integer value. The input pattern may be decoded either as BIN, BCD or GRAY format depending on the setting of the parameter *CodeType*.

It is also possible to use even parity check of the input binary signal. Whether the parity check shall be used or not is set with the setting parameter *UseParity*.

The input BIERR on (TCMYLTC , 84) can be used as supervisory input for indication of any external error (Binary Input/output Module) in the system for reading of tap changer position. Likewise, the input OUTERR can be used as a supervisory of the Binary Input/output Module.

The truth table (see table 172) shows the conversion for Binary, Binary Coded Decimal, and Gray coded signals.

Table 172: Binary, BCD and Gray conversion

INPUTS							OUTPUTS					
							BIN coded		BCD coded		GRAY coded	
BIT 6 (MSB)	BIT 5	BIT 4	BIT 3	BIT 2	BIT 1 (LSB)	PARITY PARUSE=1	VALUE	ERROR	VALUE	ERROR	VALUE	ERROR
0	0	0	0	0	0	0	0	0	0	0	0	0
0	0	0	0	0	1	1	1	0	1	0	1	0
0	0	0	0	1	0	1	2	0	2	0	3	0
0	0	0	0	1	1	0	3	0	3	0	2	0
0	0	0	1	0	0	1	4	0	4	0	7	0
0	0	0	1	0	1	0	5	0	5	0	6	0
0	0	0	1	1	0	0	6	0	6	0	4	0
0	0	0	1	1	1	1	7	0	7	0	5	0
0	0	1	0	0	0	1	8	0	8	0	15	0
0	0	1	0	0	1	0	9	0	9	0	14	0
0	0	1	0	1	0	0	10	0	0	1	24	0
0	0	1	0	1	1	1	11	0	0	1	13	0
0	0	1	1	0	0	0	12	0	0	1	8	0
0	0	1	1	0	1	1	13	0	0	1	9	0
0	0	1	1	1	0	1	14	0	0	1	11	0
0	0	1	1	1	1	0	15	0	0	1	10	0
0	1	0	0	0	0	1	16	0	10	0	31	0
0	1	0	0	0	1	0	17	0	11	0	30	0
0	1	0	0	1	0	0	18	0	12	0	28	0
0	1	0	0	1	1	1	19	0	13	0	29	0
0	1	0	1	0	0	0	20	0	14	0	24	0
0	1	0	1	0	1	1	21	0	15	0	25	0
0	1	0	1	1	0	1	22	0	16	0	27	0
0	1	0	1	1	1	0	23	0	17	0	26	0
0	1	1	0	0	0	0	24	0	18	0	16	0
0	1	1	0	0	1	1	25	0	19	0	17	0
0	1	1	0	1	0	1	26	0	0	1	19	0
0	1	1	0	1	1	0	27	0	0	1	18	0
0	1	1	1	0	0	1	28	0	0	1	23	0
0	1	1	1	0	1	0	29	0	0	1	22	0
0	1	1	1	1	0	0	30	0	0	1	20	0
0	1	1	1	1	1	1	31	0	0	1	21	0
1	0	0	0	0	0	1	32	0	20	0	63	0
1	0	0	0	0	1	0	33	0	21	0	62	0
1	0	0	0	1	0	0	34	0	22	0	60	0
1	0	0	0	1	1	1	35	0	23	0	61	0
1	0	0	1	0	0	0	36	0	24	0	56	0
1	0	0	1	0	1	1	37	0	25	0	57	0
1	0	0	1	1	0	1	38	0	26	0	59	0
1	0	0	1	1	1	0	39	0	27	0	58	0
1	0	1	0	0	0	0	40	0	28	1	48	0
1	0	1	0	0	1	1	41	0	29	1	49	0
1	0	1	0	1	0	1	42	0	0	1	51	0
1	0	1	0	1	1	0	43	0	0	1	50	0
1	0	1	1	0	0	1	44	0	0	1	55	0
1	0	1	1	0	1	0	45	0	0	1	54	0
1	0	1	1	1	0	0	46	0	0	1	52	0

en06000522.tif

The Gray code conversion above is not complete and therefore the conversion from decimal numbers to Gray code is given below.

Table 173: Gray code conversion

INPUTS							OUTPUT GRAY coded
BIT 6 (MSB)	BIT 5	BIT 4	BIT 3	BIT 2	BIT 1 (LSB)	PARITY PARUSE=1	VALUE
0	0	0	0	0	0	0	0
0	0	0	0	0	1	1	1
0	0	0	0	1	1	0	2
0	0	0	0	1	0	1	3
0	0	0	1	1	0	0	4
0	0	0	1	1	1	1	5
0	0	0	1	0	1	0	6
0	0	0	1	0	0	1	7
0	0	1	1	0	0	0	8
0	0	1	1	0	1	1	9
0	0	1	1	1	1	0	10
0	0	1	1	1	0	1	11
0	0	1	0	1	0	0	12
0	0	1	0	1	1	1	13
0	0	1	0	0	1	0	14
0	0	1	0	0	0	1	15
0	1	1	0	0	0	0	16
0	1	1	0	0	1	1	17
0	1	1	0	1	1	0	18
0	1	1	0	1	0	1	19
0	1	1	1	1	0	0	20
0	1	1	1	1	1	1	21
0	1	1	1	0	1	0	22
0	1	1	1	0	0	1	23
0	1	0	1	0	0	0	24
0	1	0	1	0	1	1	25
0	1	0	1	1	1	0	26
0	1	0	1	1	0	1	27
0	1	0	0	1	0	0	28
0	1	0	0	1	1	1	29
0	1	0	0	0	1	0	30
0	1	0	0	0	0	1	31
1	1	0	0	0	0	0	32
1	1	0	0	0	1	1	33
1	1	0	0	1	1	0	34
1	1	0	0	1	0	1	35
1	1	0	1	1	0	0	36
1	1	0	1	1	1	1	37
1	1	0	1	0	1	0	38
1	1	0	1	0	0	1	39
1	1	1	1	0	0	0	40
1	1	1	1	0	1	1	41
1	1	1	1	1	1	0	42
1	1	1	1	1	0	1	43
1	1	1	0	1	0	0	44
1	1	1	0	1	1	1	45
1	1	1	0	0	1	0	46

en06000523.tif

Via a mA input signal

11.2.4.3 Connection between TR8ATCC (90) and TCMYLTC (84)

The two function blocks Automatic voltage control for tap changer, TR8ATCC (90) and Tap changer control and supervision, 6 binary inputs TCMYLTC (84) are connected to each other according to figure 100 below.

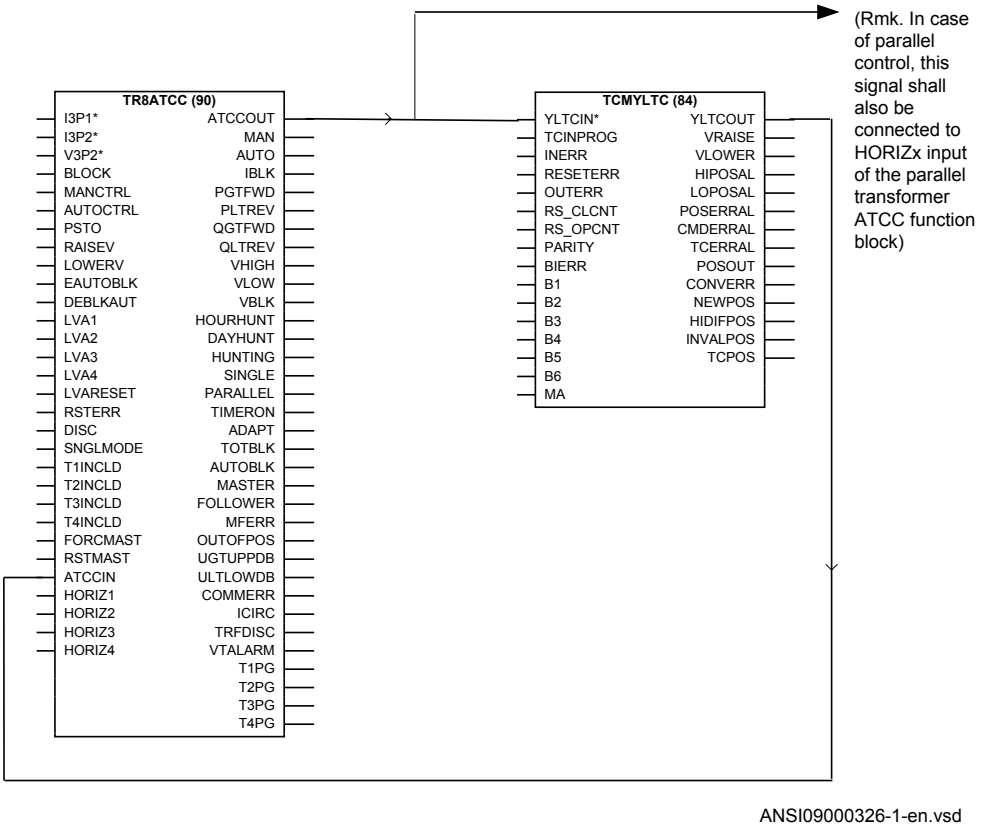

Figure 100: Connection between TR8ATCC (90) and TCMYLTC (84)

The TR8ATCC (90) function blocks have an output signal ATCCOUT, which is connected to input YLTCIN on TCMYLTC (84). The data set sent from ATCCOUT to YLTCIN contains 5 binary signals, one “word” containing 10 binary signals and 1 analog signal. For TR8ATCC (90) data is also sent from output ATCCOUT to other TR8ATCC (90) function input HORIZx, when the master-follower or circulating current mode is used.

Table 174: Binary signals: ATCCOUT / YLTCIN

Signal	Description
raiseVolt	Order to TCMYLTC (84) to make a raise command
lowerVolt	Order to TCMYLTC (84) to make a lower command
automaticCtrl	The regulation is in automatic control
extRaiseBlock	Block raise commands
extLowerBlock	Block lower commands

Table 175: Binary signals contained in word "enableBlockSignals": ATCCOUT / YLTCIN

Signal	Description
CircCurrBl	Alarm/Block tap changer operation because of high circulating current
CmdErrBl	Alarm/Block tap changer operation because of command error
OCBl	Alarm/Block tap changer operation because of over current
MFPosDiffBl	Alarm/Block tap changer operation because the tap difference between a follower and the master is greater than the set value
OVPartBl	Alarm/Block raise commands because the busbar voltage is above *Vmax*
RevActPartBl	Alarm/Block raise commands because reverse action is activated
TapChgBl	Alarm/Block tap changer operation because of tap changer error
TapPosBl	Alarm/Block commands in one direction because the tap changer has reached an end position, or Alarm/Block tap changer operation because of tap changer error
UVBl	Alarm/Block tap changer operation because the busbar voltage is below *Vblock*
UVPartBl	Alarm/Block lower commands because the busbar voltage is between *Vmin* and *Vblock*

Table 176: Analog signal: ATCCOUT / YLTCIN

Signal	Description
currAver	Value of current in the phase with the highest current value

In case of parallel control of transformers, the data set sent from output signal ATCCOUT to other TR8ATCC (90) blocks input HORIZx contains one "word" containing 10 binary signals and 6 analog signals:

Table 177: Binary signals contained in word "status": ATCCOUT / HORIZx

Signal	Description
TimerOn	This signal is activated by the transformer that has started its timer and is going to tap when the set time has expired.
automaticCTRL	Activated when the transformer is set in automatic control
mutualBlock	Activated when the automatic control is blocked
Table continues on next page	

Signal	Description
disc	Activated when the transformer is disconnected from the busbar
receiveStat	Signal used for the horizontal communication
TermIsForcedMaster	Activated when the transformer is selected Master in the master-follower parallel control mode
TermIsMaster	Activated for the transformer that is master in the master-follower parallel control mode
termReadyForMSF	Activated when the transformer is ready for master-follower parallel control mode
raiseVoltageOut	Order from the master to the followers to tap up
lowerVoltageOut	Order from the master to the followers to tap down

Table 178: Analog signals: ATCCOUT / HORIZx

Signal	Description
voltageBusbar	Measured busbar voltage for this transformer
ownLoad Currim	Measured load current imaginary part for this transformer
ownLoadCurrre	Measured load current real part for this transformer
reacSec	Transformer reactance in primary ohms referred to the LV side
relativePosition	The transformer's actual tap position
voltage Setpoint	The transformer's set voltage (*VSet*) for automatic control

The TCMYLTC (84) function blocks has an output YLTCOUT. As shown in figure 100, this output shall be connected to the input ATCCIN and it contains 10 binary signals and 4 integer signals:

Table 179: Binary signals: YLTCOUT / ATCCIN

Signal	Description
tapInOperation	Tap changer in operation, changing tap position
direction	Direction, raise or lower, for the most recent tap changer operation
tapInHighVoltPos	Tap changer in high end position
tapInLowVoltPos	Tap changer in low end position
tapPositionError	Error in reading of tap position (tap position out of range, more than one step change, BCD code error (unaccepted combination), parity fault, out of range, hardware fault for example, BIO etc.)
tapChgError	This is set high when the tap changer has not carried through a raise/lower command within the expected max. time, or if the tap changer starts tapping without a given command.
cmdError	This is set high if a given raise/lower command is not followed by a tap position change within the expected max. time
raiseVoltageFb	Feedback to TR8ATCC (90) that a raise command shall be executed
lowerVoltageFb	Feedback to TR8ATCC (90) that a lower command shall be executed
timeOutTC	Setting value of *tTCTimeout* that *tTCTimeout* has timed out.

Table 180: Integer signals: YLTCOUT / ATCCIN

Signal	Description
tapPosition	Actual tap position as reported from the load tap changer
numberOfOperations	Accumulated number of tap changer operations
tapPositionMaxVolt	Tap position for highest voltage
tapPositionMinVolt	Tap position for lowest voltage

11.2.5 Technical data

Table 181: TR8ATCC (90), TCMYLTC (84) technical data

Function	Range or value	Accuracy
Transformer reactance on ATCC side	(0.1–200.0)Ω, primary	-
Time delay for lower command when fast step down mode is activated	(1.0–100.0) s	-
Voltage control set voltage	(85.0–120.0)% of VB2	±0.5% of V_n
Outer voltage deadband	(0.2–9.0)% of VB2	± 5,0% of set value
Inner voltage deadband	(0.1–9.0)% of VB2	± 5,0% of set value
Upper limit of busbar voltage	(80–180)% of VB2	± 0.5% of V_n
Lower limit of busbar voltage	(70–120)% of VB2	± 0.5% of V_n
Undervoltage block level	(0–120)% of VB2	± 0.5% of V_n
Time delay (long) for automatic control commands	(3–1000) s	± 0.5% ± 110 ms
Time delay (short) for automatic control commands	(1–1000) s	± 0.5% ± 110 ms
Minimum operating time in inverse mode	(3–120) s	± 0.5% ± 110 ms
Line resistance	(0.00–150.00)Ω, primary	-
Line reactance	(-150.00–150.00)Ω, primary	-
Load voltage adjustment constants	(-20.0–20.0)% of VB2	± 5,0% of set value
Load voltage auto correction	(-20.0–20.0)% of VB2	± 5,0% of set value
Overcurrent block level	(0–250)% of IBase (for winding 1 which is defined in a global base function, selected with setting GlobalBaseSel1 for TR8ATCC (90))	± 1.0% of I_n at $I \leq I_n$ ± 1.0% of I at $I > I_n$
Level for number of counted raise/lower within one hour	(0–30) operations/hour	-
Level for number of counted raise/lower within 24 hours	(0–100) operations/day	-

Table continues on next page

Function	Range or value	Accuracy
Time window for hunting alarm	(1–120) minutes	-
Hunting detection alarm, max operations/window	(3–30) operations/window	-
Alarm level of active power in forward and reverse direction	(-9999.99–9999.99) MW	± 1.0% of S_n
Alarm level of reactive power in forward and reverse direction	(-9999.99–9999.99) MVAr	± 1.0% of S_n
Time delay for alarms from power supervision	(1–6000) s	± 0.5% ± 110 ms
Tap position for lowest and highest voltage	(1–63)	-
Type of code conversion	Binary, BCD, Gray, ContactPerTap	-
Time after position change before the value is accepted	(1–60) s	± 0.5% ± 110 ms
Tap changer constant time-out	(1–120) s	± 0.5% ± 110 ms
Raise/lower command output pulse duration	(0.5–10.0) s	± 0.5% ± 110 ms

11.3 Logic rotating switch for function selection and LHMI presentation SLGGIO

11.3.1 Identification

Function description	IEC 61850 identification	IEC 60617 identification	ANSI/IEEE C37.2 device number
Logic rotating switch for function selection and LHMI presentation	SLGGIO	-	-

11.3.2 Functionality

The logic rotating switch for function selection and LHMI presentation (SLGGIO) (or the selector switch function block) is used to get a selector switch functionality similar to the one provided by a hardware selector switch. Hardware selector switches are used extensively by utilities, in order to have different functions operating on pre-set values. Hardware switches are however sources for maintenance issues, lower system reliability and an extended purchase portfolio. The logic selector switches eliminate all these problems.

11.3.3 Function block

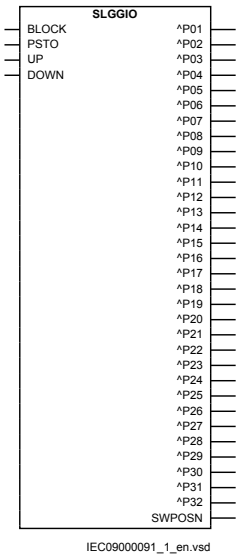

Figure 101: SLGGIO function block

11.3.4 Signals

Table 182: SLGGIO Input signals

Name	Type	Default	Description
BLOCK	BOOLEAN	0	Block of function
PSTO	INTEGER	0	Operator place selection
UP	BOOLEAN	0	Binary "UP" command
DOWN	BOOLEAN	0	Binary "DOWN" command

Table 183: SLGGIO Output signals

Name	Type	Description
P01	BOOLEAN	Selector switch position 1
P02	BOOLEAN	Selector switch position 2
P03	BOOLEAN	Selector switch position 3
P04	BOOLEAN	Selector switch position 4
P05	BOOLEAN	Selector switch position 5
P06	BOOLEAN	Selector switch position 6
P07	BOOLEAN	Selector switch position 7
Table continues on next page		

Name	Type	Description
P08	BOOLEAN	Selector switch position 8
P09	BOOLEAN	Selector switch position 9
P10	BOOLEAN	Selector switch position 10
P11	BOOLEAN	Selector switch position 11
P12	BOOLEAN	Selector switch position 12
P13	BOOLEAN	Selector switch position 13
P14	BOOLEAN	Selector switch position 14
P15	BOOLEAN	Selector switch position 15
P16	BOOLEAN	Selector switch position 16
P17	BOOLEAN	Selector switch position 17
P18	BOOLEAN	Selector switch position 18
P19	BOOLEAN	Selector switch position 19
P20	BOOLEAN	Selector switch position 20
P21	BOOLEAN	Selector switch position 21
P22	BOOLEAN	Selector switch position 22
P23	BOOLEAN	Selector switch position 23
P24	BOOLEAN	Selector switch position 24
P25	BOOLEAN	Selector switch position 25
P26	BOOLEAN	Selector switch position 26
P27	BOOLEAN	Selector switch position 27
P28	BOOLEAN	Selector switch position 28
P29	BOOLEAN	Selector switch position 29
P30	BOOLEAN	Selector switch position 30
P31	BOOLEAN	Selector switch position 31
P32	BOOLEAN	Selector switch position 32
SWPOSN	INTEGER	Switch position as integer value

11.3.5 Settings

Table 184: SLGGIO Non group settings (basic)

Name	Values (Range)	Unit	Step	Default	Description
Operation	Disabled Enabled	-	-	Disabled	Operation Enable/Disable
NrPos	2 - 32	-	1	32	Number of positions in the switch
OutType	Pulsed Steady	-	-	Steady	Output type, steady or pulse

Table continues on next page

Name	Values (Range)	Unit	Step	Default	Description
tPulse	0.000 - 60.000	s	0.001	0.200	Operate pulse duration
tDelay	0.000 - 60000.000	s	0.010	0.000	Output time delay
StopAtExtremes	Disabled Enabled	-	-	Disabled	Stop when min or max position is reached

11.3.6 Monitored data

Table 185: SLGGIO Monitored data

Name	Type	Values (Range)	Unit	Description
SWPOSN	INTEGER	-	-	Switch position as integer value

11.3.7 Operation principle

The logic rotating switch for function selection and LHMI presentation (SLGGIO) function has two operating inputs – UP and DOWN. When a signal is received on the UP input, the block will activate the output next to the present activated output, in ascending order (if the present activated output is 3 – for example and one operates the UP input, then the output 4 will be activated). When a signal is received on the DOWN input, the block will activate the output next to the present activated output, in descending order (if the present activated output is 3 – for example and one operates the DOWN input, then the output 2 will be activated). Depending on the output settings the output signals can be steady or pulsed. In case of steady signals, in case of UP or DOWN operation, the previously active output will be deactivated. Also, depending on the settings one can have a time delay between the UP or DOWN activation signal positive front and the output activation.

Besides the inputs visible in the application configuration in the Application Configuration tool, there are other possibilities that will allow an user to set the desired position directly (without activating the intermediate positions), either locally or remotely, using a “select before execute” dialog. One can block the function operation, by activating the BLOCK input. In this case, the present position will be kept and further operation will be blocked. The operator place (local or remote) is specified through the PSTO input. If any operation is allowed the signal INTONE from the Fixed signal function block can be connected. SLGGIO function block has also an integer value output, that generates the actual position number. The positions and the block names are fully settable by the user. These names will appear in the menu, so the user can see the position names instead of a number.

11.4 Selector mini switch VSGGIO

11.4.1 Identification

Function description	IEC 61850 identification	IEC 60617 identification	ANSI/IEEE C37.2 device number
Selector mini switch	VSGGIO	-	-

11.4.2 Functionality

The Selector mini switch VSGGIO function block is a multipurpose function used for a variety of applications, as a general purpose switch.

VSGGIO can be controlled from the menu or from a symbol on the single line diagram (SLD) on the local HMI.

11.4.3 Function block

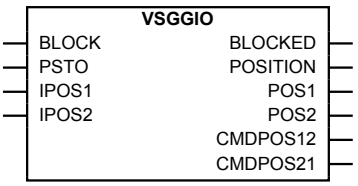

IEC09000341-1-en.vsd

11.4.4 Signals

Table 186: VSGGIO Input signals

Name	Type	Default	Description
BLOCK	BOOLEAN	0	Block of function
PSTO	INTEGER	0	Operator place selection
IPOS1	BOOLEAN	0	Position 1 indicating input
IPOS2	BOOLEAN	0	Position 2 indicating input

Table 187: VSGGIO Output signals

Name	Type	Description
BLOCKED	BOOLEAN	The function is active but the functionality is blocked
POSITION	INTEGER	Position indication, integer
POS1	BOOLEAN	Position 1 indication, logical signal
POS2	BOOLEAN	Position 2 indication, logical signal
CMDPOS12	BOOLEAN	Execute command from position 1 to position 2
CMDPOS21	BOOLEAN	Execute command from position 2 to position 1

11.4.5 Settings

Table 188: VSGGIO Non group settings (basic)

Name	Values (Range)	Unit	Step	Default	Description
Operation	Disabled Enabled	-	-	Disabled	Disable/Enable Operation
CtlModel	Dir Norm SBO Enh	-	-	Dir Norm	Specifies the type for control model according to IEC 61850
Mode	Steady Pulsed	-	-	Pulsed	Operation mode
tSelect	0.000 - 60.000	s	0.001	30.000	Max time between select and execute signals
tPulse	0.000 - 60.000	s	0.001	0.200	Command pulse lenght

11.4.6 Operation principle

Selector mini switch (VSGGIO) function can be used for double purpose, in the same way as switch controller (SCSWI) functions are used:

- for indication on the single line diagram (SLD). Position is received through the IPOS1 and IPOS2 inputs and distributed in the configuration through the POS1 and POS2 outputs, or to IEC 61850 through reporting, or GOOSE.
- for commands that are received via the local HMI or IEC 61850 and distributed in the configuration through outputs CMDPOS12 and CMDPOS21.
  The output CMDPOS12 is set when the function receives a CLOSE command from the local HMI when the SLD is displayed and the object is chosen.
  The output CMDPOS21 is set when the function receives an OPEN command from the local HMI when the SLD is displayed and the object is chosen.

It is important for indication in the SLD that the a symbol is associated with a controllable object, otherwise the symbol won't be displayed on the screen. A symbol is created and configured in GDE tool in PCM600.

The PSTO input is connected to the Local remote switch to have a selection of operators place, operation from local HMI (Local) or through IEC 61850 (Remote). An INTONE connection from Fixed signal function block (FXDSIGN) will allow operation from local HMI.

As it can be seen, both indications and commands are done in double-bit representation, where a combination of signals on both inputs/outputs generate the desired result.

The following table shows the relationship between IPOS1/IPOS2 inputs and the name of the string that is shown on the SLD. The value of the strings are set in PST.

IPOS1	IPOS2	Name of displayed string	Default string value
0	0	PosUndefined	P00
1	0	Position1	P01
0	1	Position2	P10
1	1	PosBadState	P11

11.5 IEC 61850 generic communication I/O functions DPGGIO

11.5.1 Identification

Function description	IEC 61850 identification	IEC 60617 identification	ANSI/IEEE C37.2 device number
IEC 61850 generic communication I/O functions	DPGGIO	-	-

11.5.2 Functionality

The IEC 61850 generic communication I/O functions (DPGGIO) function block is used to send double indications to other systems or equipment in the substation. It is especially used in the interlocking and reservation station-wide logics.

11.5.3 Function block

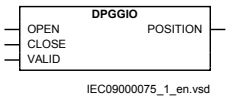

Figure 102: DPGGIO function block

11.5.4 Signals

Table 189: DPGGIO Input signals

Name	Type	Default	Description
OPEN	BOOLEAN	0	Open indication
CLOSE	BOOLEAN	0	Close indication
VALID	BOOLEAN	0	Valid indication

Table 190: DPGGIO Output signals

Name	Type	Description
POSITION	INTEGER	Double point indication

11.5.5 Settings

The function does not have any parameters available in Local HMI or Protection and Control IED Manager (PCM600).

11.5.6 Operation principle

Upon receiving the input signals, the IEC 61850 generic communication I/O functions (DPGGIO) function block will send the signals over IEC 61850-8-1 to the equipment or system that requests these signals. To be able to get the signals, PCM600 must be used to define which function block in which equipment or system should receive this information.

11.6 Single point generic control 8 signals SPC8GGIO

11.6.1 Identification

Function description	IEC 61850 identification	IEC 60617 identification	ANSI/IEEE C37.2 device number
Single point generic control 8 signals	SPC8GGIO	-	-

11.6.2 Functionality

The Single point generic control 8 signals (SPC8GGIO) function block is a collection of 8 single point commands, designed to bring in commands from REMOTE (SCADA) to those parts of the logic configuration that do not need extensive command receiving functionality (for example, SCSWI). In this way, simple commands can be sent directly to the IED outputs, without confirmation. Confirmation (status) of the result of the commands is supposed to be achieved by other means, such as binary inputs and SPGGIO function blocks. The commands can be pulsed or steady.

11.6.3 Function block

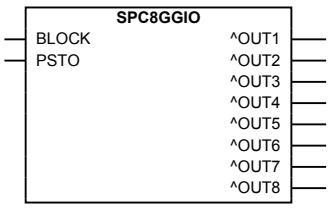

Figure 103: SPC8GGIO function block

11.6.4 Signals

Table 191: SPC8GGIO Input signals

Name	Type	Default	Description
BLOCK	BOOLEAN	0	Block of function
PSTO	INTEGER	2	Operator place selection

Table 192: SPC8GGIO Output signals

Name	Type	Description
OUT1	BOOLEAN	Output 1
OUT2	BOOLEAN	Output2
OUT3	BOOLEAN	Output3
OUT4	BOOLEAN	Output4
OUT5	BOOLEAN	Output5
OUT6	BOOLEAN	Output6
OUT7	BOOLEAN	Output7
OUT8	BOOLEAN	Output8

11.6.5 Settings

Table 193: SPC8GGIO Non group settings (basic)

Name	Values (Range)	Unit	Step	Default	Description
Operation	Disabled Enabled	-	-	Disabled	Operation Disabled/Enabled
Latched1	Pulsed Latched	-	-	Pulsed	Setting for pulsed/latched mode for output 1
tPulse1	0.01 - 6000.00	s	0.01	0.10	Output1 Pulse Time
Latched2	Pulsed Latched	-	-	Pulsed	Setting for pulsed/latched mode for output 2
tPulse2	0.01 - 6000.00	s	0.01	0.10	Output2 Pulse Time
Latched3	Pulsed Latched	-	-	Pulsed	Setting for pulsed/latched mode for output 3
tPulse3	0.01 - 6000.00	s	0.01	0.10	Output3 Pulse Time
Latched4	Pulsed Latched	-	-	Pulsed	Setting for pulsed/latched mode for output 4
tPulse4	0.01 - 6000.00	s	0.01	0.10	Output4 Pulse Time
Latched5	Pulsed Latched	-	-	Pulsed	Setting for pulsed/latched mode for output 5
tPulse5	0.01 - 6000.00	s	0.01	0.10	Output5 Pulse Time
Latched6	Pulsed Latched	-	-	Pulsed	Setting for pulsed/latched mode for output 6
tPulse6	0.01 - 6000.00	s	0.01	0.10	Output6 Pulse Time
Latched7	Pulsed Latched	-	-	Pulsed	Setting for pulsed/latched mode for output 7
tPulse7	0.01 - 6000.00	s	0.01	0.10	Output7 Pulse Time
Latched8	Pulsed Latched	-	-	Pulsed	Setting for pulsed/latched mode for output 8
tPulse8	0.01 - 6000.00	s	0.01	0.10	Output8 pulse time

11.6.6 Operation principle

The PSTO input selects the operator place (LOCAL, REMOTE or ALL). One of the eight outputs is activated based on the command sent from the operator place selected. The settings *Latchedx* and *tPulsex* (where x is the respective output) will determine if the signal will be pulsed (and how long the pulse is) or latched (steady). BLOCK will block the operation of the function – in case a command is sent, no output will be activated.

PSTO is the universal operator place selector for all control functions. Although, PSTO can be configured to use LOCAL or ALL operator places only, REMOTE operator place is used in SPC8GGIO function.

11.7 Automation bits AUTOBITS

11.7.1 Identification

Function description	IEC 61850 identification	IEC 60617 identification	ANSI/IEEE C37.2 device number
AutomationBits, command function for DNP3	AUTOBITS	-	-

11.7.2 Functionality

The Automation bits function (AUTOBITS) is used to configure the DNP3 protocol command handling.

11.7.3 Function block

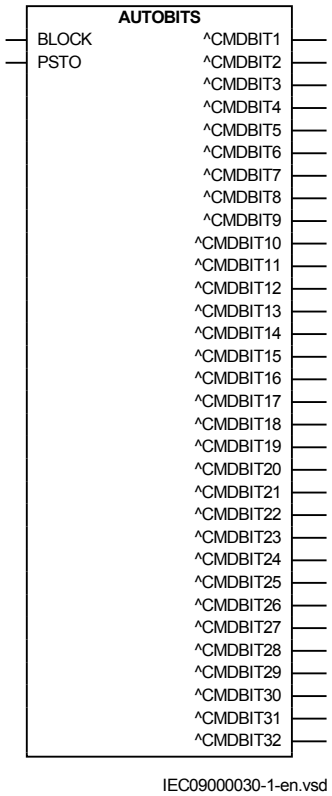

Figure 104: AUTOBITS function block

11.7.4 Signals

Table 194: AUTOBITS Input signals

Name	Type	Default	Description
BLOCK	BOOLEAN	0	Block of function
PSTO	INTEGER	0	Operator place selection

Table 195: AUTOBITS Output signals

Name	Type	Description
CMDBIT1	BOOLEAN	Command out bit 1
CMDBIT2	BOOLEAN	Command out bit 2
CMDBIT3	BOOLEAN	Command out bit 3
Table continues on next page		

Name	Type	Description
CMDBIT4	BOOLEAN	Command out bit 4
CMDBIT5	BOOLEAN	Command out bit 5
CMDBIT6	BOOLEAN	Command out bit 6
CMDBIT7	BOOLEAN	Command out bit 7
CMDBIT8	BOOLEAN	Command out bit 8
CMDBIT9	BOOLEAN	Command out bit 9
CMDBIT10	BOOLEAN	Command out bit 10
CMDBIT11	BOOLEAN	Command out bit 11
CMDBIT12	BOOLEAN	Command out bit 12
CMDBIT13	BOOLEAN	Command out bit 13
CMDBIT14	BOOLEAN	Command out bit 14
CMDBIT15	BOOLEAN	Command out bit 15
CMDBIT16	BOOLEAN	Command out bit 16
CMDBIT17	BOOLEAN	Command out bit 17
CMDBIT18	BOOLEAN	Command out bit 18
CMDBIT19	BOOLEAN	Command out bit 19
CMDBIT20	BOOLEAN	Command out bit 20
CMDBIT21	BOOLEAN	Command out bit 21
CMDBIT22	BOOLEAN	Command out bit 22
CMDBIT23	BOOLEAN	Command out bit 23
CMDBIT24	BOOLEAN	Command out bit 24
CMDBIT25	BOOLEAN	Command out bit 25
CMDBIT26	BOOLEAN	Command out bit 26
CMDBIT27	BOOLEAN	Command out bit 27
CMDBIT28	BOOLEAN	Command out bit 28
CMDBIT29	BOOLEAN	Command out bit 29
CMDBIT30	BOOLEAN	Command out bit 30
CMDBIT31	BOOLEAN	Command out bit 31
CMDBIT32	BOOLEAN	Command out bit 32

11.7.5 Settings

Table 196: AUTOBITS Non group settings (basic)

Name	Values (Range)	Unit	Step	Default	Description
Operation	Disabled Enabled	-	-	Disabled	Disable/Enable Operation

11.7.6 Operation principle

Automation bits function (AUTOBITS) has 32 individual outputs which each can be mapped as a Binary Output point in DNP3. The output is operated by a "Object 12" in DNP3. This object contains parameters for control-code, count, on-time and off-time. To operate an AUTOBITS output point, send a control-code of latch-On, latch-Off, pulse-On, pulse-Off, Trip or Close. The remaining parameters will be regarded were appropriate. ex: pulse-On, on-time=100, off-time=300, count=5 would give 5 positive 100 ms pulses, 300 ms apart.

There is a BLOCK input signal, which will disable the operation of the function, in the same way the setting *Operation*: *Enabled/Disabled* does. That means that, upon activation of the BLOCK input, all 32 CMDBITxx outputs will be set to 0. The BLOCK acts like an overriding, the function still receives data from the DNP3 master. Upon deactivation of BLOCK, all the 32 CMDBITxx outputs will be set by the DNP3 master again, momentarily. For AUTOBITS , the PSTO input determines the operator place. The command can be written to the block while in “Remote”. If PSTO is in “Local” then no change is applied to the outputs.

For description of the DNP3 protocol implementation, refer to DNP3 communication protocol manual.

11.8 Function commands for IEC 60870-5-103 I103CMD

11.8.1 Functionality

I103CMD is a command function block in control direction with pre-defined output signals.

11.8.2 Function block

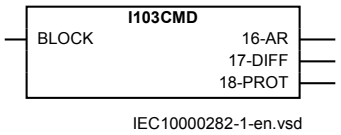

Figure 105: I103CMD function block

11.8.3 Signals

Table 197: I103CMD Input signals

Name	Type	Default	Description
BLOCK	BOOLEAN	0	Block of commands

Table 198: I103CMD Output signals

Name	Type	Description
16-AR	BOOLEAN	Information number 16, block of autorecloser
17-DIFF	BOOLEAN	Information number 17, block of differential protection
18-PROT	BOOLEAN	Information number 18, block of protection

11.8.4 Settings

Table 199: I103CMD Non group settings (basic)

Name	Values (Range)	Unit	Step	Default	Description
FunctionType	1 - 255	-	1	1	Function type (1-255)

11.9 IED commands for IEC 60870-5-103 I103IEDCMD

11.9.1 Functionality

I103IEDCMD is a command block in control direction with defined IED functions.

11.9.2 Function block

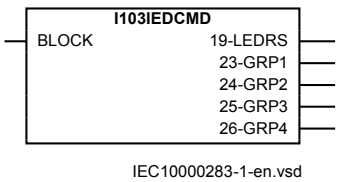

Figure 106: I103IEDCMD function block

11.9.3 Signals

Table 200: I103IEDCMD Input signals

Name	Type	Default	Description
BLOCK	BOOLEAN	0	Block of commands

Table 201: I103IEDCMD Output signals

Name	Type	Description
19-LEDRS	BOOLEAN	Information number 19, reset LEDs
23-GRP1	BOOLEAN	Information number 23, activate setting group 1
24-GRP2	BOOLEAN	Information number 24, activate setting group 2
25-GRP3	BOOLEAN	Information number 25, activate setting group 3
26-GRP4	BOOLEAN	Information number 26, activate setting group 4

11.9.4 Settings

Table 202: I103IEDCMD Non group settings (basic)

Name	Values (Range)	Unit	Step	Default	Description
FunctionType	1 - 255	-	1	255	Function type (1-255)

11.10 Function commands user defined for IEC 60870-5-103 I103USRCMD

11.10.1 Functionality

I103USRCMD is a command block in control direction with user defined output signals. These function blocks include the *FunctionType* parameter for each block in the private range, and the Information number parameter for each output signal.

11.10.2 Function block

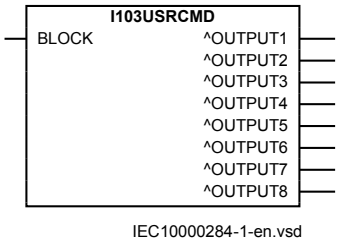

Figure 107: I103USRCMD function block

11.10.3 Signals

Table 203: I103USRCMD Input signals

Name	Type	Default	Description
BLOCK	BOOLEAN	0	Block of commands

Table 204: I103USRCMD Output signals

Name	Type	Description
OUTPUT1	BOOLEAN	Command output 1
OUTPUT2	BOOLEAN	Command output 2
OUTPUT3	BOOLEAN	Command output 3
OUTPUT4	BOOLEAN	Command output 4
OUTPUT5	BOOLEAN	Command output 5
OUTPUT6	BOOLEAN	Command output 6
OUTPUT7	BOOLEAN	Command output 7
OUTPUT8	BOOLEAN	Command output 8

11.10.4 Settings

Table 205: I103USRCMD Non group settings (basic)

Name	Values (Range)	Unit	Step	Default	Description
FunctionType	1 - 255	-	1	1	Function type (1-255)
PulseMode	Steady Pulsed	-	-	Pulsed	Pulse mode
PulseLength	0.200 - 60.000	s	0.001	0.400	Pulse length
InfNo_1	1 - 255	-	1	1	Information number for output 1 (1-255)
Table continues on next page					

Name	Values (Range)	Unit	Step	Default	Description
InfNo_2	1 - 255	-	1	2	Information number for output 2 (1-255)
InfNo_3	1 - 255	-	1	3	Information number for output 3 (1-255)
InfNo_4	1 - 255	-	1	4	Information number for output 4 (1-255)
InfNo_5	1 - 255	-	1	5	Information number for output 5 (1-255)
InfNo_6	1 - 255	-	1	6	Information number for output 6 (1-255)
InfNo_7	1 - 255	-	1	7	Information number for output 7 (1-255)
InfNo_8	1 - 255	-	1	8	Information number for output 8 (1-255)

11.11 Function commands generic for IEC 60870-5-103 I103GENCMD

11.11.1 Functionality

I103GENCMD is used for transmitting generic commands over IEC 60870-5-103. The function has two outputs signals CMD_OFF and CMD_ON that can be used to implement double-point command schemes.

11.11.2 Function block

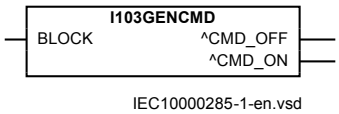

Figure 108: I103GENCMD function block

11.11.3 Signals

Table 206: I103GENCMD Input signals

Name	Type	Default	Description
BLOCK	BOOLEAN	0	Block of command

Table 207: I103GENCMD Output signals

Name	Type	Description
CMD_OFF	BOOLEAN	Command output OFF
CMD_ON	BOOLEAN	Command output ON

11.11.4 Settings

Table 208: I103GENCMD Non group settings (basic)

Name	Values (Range)	Unit	Step	Default	Description
FunctionType	1 - 127	-	1	1	Function type (1-255)
PulseLength	0.000 - 60.000	s	0.001	0.400	Pulse length
InfNo	32 - 239	-	1	32	Information number for command output (1-255)

11.12 IED commands with position and select for IEC 60870-5-103 I103POSCMD

11.12.1 Functionality

I103POSCMD has double-point position indicators that are getting the position value as an integer (for example from the POSITION output of the SCSWI function block) and sending it over IEC 60870-5-103 (1=OPEN; 2=CLOSE); as per standard, *0* and *3* values of the position are not supported.

The BLOCK input will block only the signals in monitoring direction (the position information), not the commands via IEC 60870-5-103. The SELECT input is used to indicate that the monitored apparatus has been selected (in a select-before-operate type of control)

11.12.2 Function block

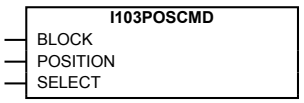

Figure 109: I103POSCMD function block

11.12.3 Signals

Table 209: I103POSCMD Input signals

Name	Type	Default	Description
BLOCK	BOOLEAN	0	Block of command
POSITION	INTEGER	0	Position of controllable object
SELECT	BOOLEAN	0	Select of controllable object

11.12.4 Settings

Table 210: I103POSCMD Non group settings (basic)

Name	Values (Range)	Unit	Step	Default	Description
FunctionType	1 - 255	-	1	1	Fucntion type (1-255)
InfNo	160 - 196	-	4	160	Information number for command output (1-255)

Section 12 Logic

12.1 Tripping logic common 3-phase output SMPPTRC (94)

12.1.1 Identification

Function description	IEC 61850 identification	IEC 60617 identification	ANSI/IEEE C37.2 device number
Tripping logic common 3-phase output	SMPPTRC	*I->O*	94

12.1.2 Functionality

A function block for protection tripping is provided for each circuit breaker involved in the tripping of the fault. It provides pulse prolongation to ensure a three-phase trip pulse of sufficient length, as well as all functionality necessary for correct co-operation with autoreclosing functions.

The trip function block also includes functionality for breaker lock-out.

12.1.3 Function block

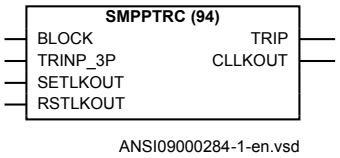

Figure 110: SMPPTRC (94) function block

12.1.4 Signals

Table 211: SMPPTRC (94) Input signals

Name	Type	Default	Description
BLOCK	BOOLEAN	0	Block of function
TRINP_3P	BOOLEAN	0	Trip all phases
SETLKOUT	BOOLEAN	0	Input for setting the circuit breaker lockout function
RSTLKOUT	BOOLEAN	0	Input for resetting the circuit breaker lockout function

Table 212: SMPPTRC (94) Output signals

Name	Type	Description
TRIP	BOOLEAN	Common trip signal
CLLKOUT	BOOLEAN	Circuit breaker lockout output (set until reset)

12.1.5 Settings

Table 213: SMPPTRC (94) Group settings (basic)

Name	Values (Range)	Unit	Step	Default	Description
Operation	Disabled Enabled	-	-	Enabled	Disable/Enable Operation
tTripMin	0.000 - 60.000	s	0.001	0.150	Minimum duration of trip output signal

Table 214: SMPPTRC (94) Group settings (advanced)

Name	Values (Range)	Unit	Step	Default	Description
TripLockout	Disabled Enabled	-	-	Disabled	On: Activate output (CLLKOUT) and trip latch, Off: Only output
AutoLock	Disabled Enabled	-	-	Disabled	On: Lockout from input (SETLKOUT) and trip, Off: Only input

12.1.6 Operation principle

The duration of a trip output signal from tripping logic common 3-phase output SMPPTRC (94) is settable (*tTripMin*). The pulse length should be long enough to secure the breaker opening.

For three-pole tripping logic common 3-phase output, SMPPTRC (94) has a single input (TRINP_3P) through which all trip output signals from the protection functions within the IED, or from external protection functions via one or more of the IEDs

binary inputs, are routed. It has a single trip output (TRIP) for connection to one or more of the IEDs binary outputs, as well as to other functions within the IED requiring this signal.

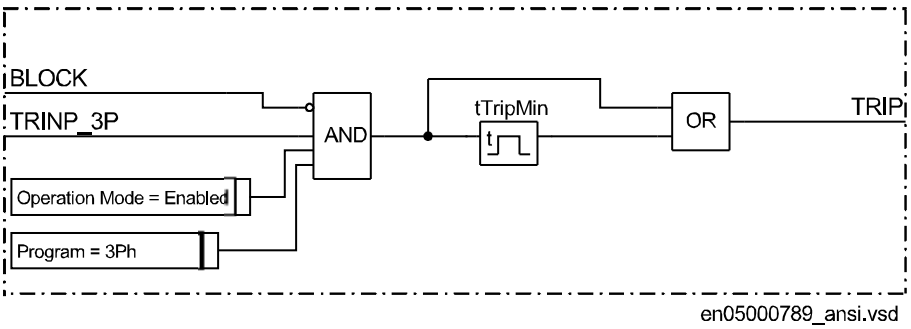

Figure 111: Simplified logic diagram for three pole trip

Lockout can be activated either by activating the input (SETLKOUT) or automatically from the trip input by setting *AutoLock* to *Enabled*. A Lockout condition will be indicated by activation of the output (CLLKOUT). If lockout has been activated it can be reset by activating the input (RSTLKOUT) or via the HMI.

If *TripLockout* is set to *Enabled* an active Lockout will latch the three-phase trip output. In this way if both *AutoLock* and *TripLockout* are set to *Enabled* the trip will always be three-phase and sealed in.

12.1.7 Technical data

Table 215: SMPPTRC (94) technical data

Function	Range or value	Accuracy
Trip action	3-ph	-
Timers	(0.000-60.000) s	± 0.5% ± 10 ms

12.2 Trip matrix logic TMAGGIO

12.2.1 Identification

Function description	IEC 61850 identification	IEC 60617 identification	ANSI/IEEE C37.2 device number
Trip matrix logic	TMAGGIO	-	-

12.2.2 Functionality

The Trip matrix logic TMAGGIO function is used to route trip signals and other logical output signals to the tripping logics SMPPTRC and SPTPTRC or to different output contacts on the IED.

TMAGGIO output signals and the physical outputs allows the user to adapt the signals to the physical tripping outputs according to the specific application needs.

12.2.3 Function block

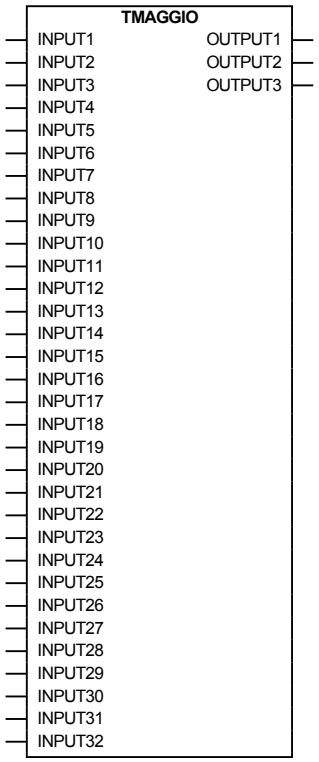

Figure 112: TMAGGIO function block

12.2.4 Signals

Table 216: TMAGGIO Input signals

Name	Type	Default	Description
INPUT1	BOOLEAN	0	Binary input 1
INPUT2	BOOLEAN	0	Binary input 2
INPUT3	BOOLEAN	0	Binary input 3
INPUT4	BOOLEAN	0	Binary input 4
INPUT5	BOOLEAN	0	Binary input 5
INPUT6	BOOLEAN	0	Binary input 6
INPUT7	BOOLEAN	0	Binary input 7
INPUT8	BOOLEAN	0	Binary input 8
INPUT9	BOOLEAN	0	Binary input 9
INPUT10	BOOLEAN	0	Binary input 10
INPUT11	BOOLEAN	0	Binary input 11
INPUT12	BOOLEAN	0	Binary input 12
INPUT13	BOOLEAN	0	Binary input 13
INPUT14	BOOLEAN	0	Binary input 14
INPUT15	BOOLEAN	0	Binary input 15
INPUT16	BOOLEAN	0	Binary input 16
INPUT17	BOOLEAN	0	Binary input 17
INPUT18	BOOLEAN	0	Binary input 18
INPUT19	BOOLEAN	0	Binary input 19
INPUT20	BOOLEAN	0	Binary input 20
INPUT21	BOOLEAN	0	Binary input 21
INPUT22	BOOLEAN	0	Binary input 22
INPUT23	BOOLEAN	0	Binary input 23
INPUT24	BOOLEAN	0	Binary input 24
INPUT25	BOOLEAN	0	Binary input 25
INPUT26	BOOLEAN	0	Binary input 26
INPUT27	BOOLEAN	0	Binary input 27
INPUT28	BOOLEAN	0	Binary input 28
INPUT29	BOOLEAN	0	Binary input 29
INPUT30	BOOLEAN	0	Binary input 30
INPUT31	BOOLEAN	0	Binary input 31
INPUT32	BOOLEAN	0	Binary input 32

Table 217: TMAGGIO Output signals

Name	Type	Description
OUTPUT1	BOOLEAN	OR function betweeen inputs 1 to 16
OUTPUT2	BOOLEAN	OR function between inputs 17 to 32
OUTPUT3	BOOLEAN	OR function between inputs 1 to 32

12.2.5 Settings

Table 218: TMAGGIO Group settings (basic)

Name	Values (Range)	Unit	Step	Default	Description
Operation	Disabled Enabled	-	-	Enabled	Operation Disable / Enable
PulseTime	0.050 - 60.000	s	0.001	0.150	Output pulse time
OnDelay	0.000 - 60.000	s	0.001	0.000	Output on delay time
OffDelay	0.000 - 60.000	s	0.001	0.000	Output off delay time
ModeOutput1	Steady Pulsed	-	-	Steady	Mode for output 1, steady or pulsed
ModeOutput2	Steady Pulsed	-	-	Steady	Mode for output 2, steady or pulsed
ModeOutput3	Steady Pulsed	-	-	Steady	Mode for output 3, steady or pulsed

12.2.6 Operation principle

Trip matrix logic (TMAGGIO) block is provided with 32 input signals and 3 output signals. The function block incorporates internal logic OR gates in order to provide the necessary grouping of connected input signals (for example, for tripping and alarming purposes) to the three output signals from the function block.

Internal built-in OR logic is made in accordance with the following three rules:

1. when any one of first 16 inputs signals (INPUT1 to INPUT16) has logical value 1 (TRUE) the first output signal (OUTPUT1) will get logical value 1 (TRUE).
2. when any one of second 16 inputs signals (INPUT17 to INPUT32) has logical value 1 (TRUE) the second output signal (OUTPUT2) will get logical value 1 (TRUE).
3. when any one of all 32 input signals (INPUT1 to INPUT32) has logical value 1 (TRUE) the third output signal (OUTPUT3) will get logical value 1 (TRUE).

By use of the settings *ModeOutput1*, *ModeOutput2*, *ModeOutput3*, *PulseTime*, *OnDelay* and *OffDelay* the behavior of each output can be customized. The *OnDelay* is

always active and will delay the input to output transition by the set time. The *ModeOutput* for respective output decides whether the output shall be steady with an drop-off delay as set by *OffDelay* or if it shall give a pulse with duration set by *PulseTime*. Note that for pulsed operation since the inputs are connected in an OR-function a new pulse will only be given on the output if all related inputs are reset and then one is activated again. And for steady operation the *OffDelay* will start when all related inputs have reset. Detailed logical diagram is shown in figure 113

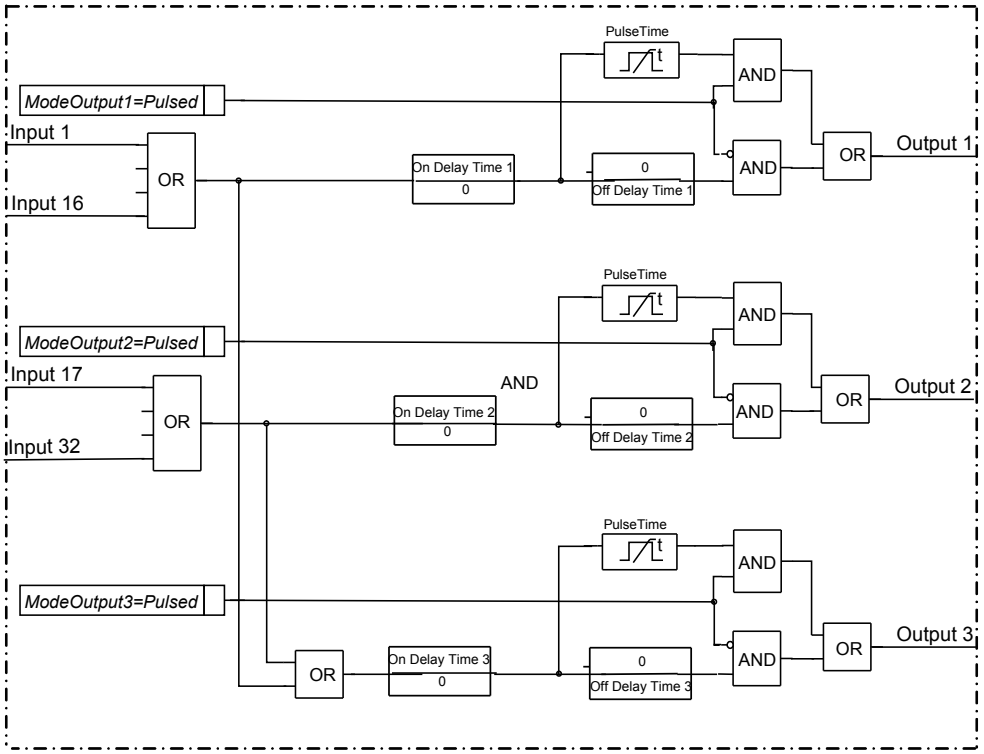

Figure 113: Trip matrix internal logic

Output signals from TMAGGIO are typically connected to other logic blocks or directly to output contacts in the IED. When used for direct tripping of the circuit breaker(s) the pulse time delay shall be set to approximately 0.150 seconds in order to obtain satisfactory minimum duration of the trip pulse to the circuit breaker trip coils.

12.3 Configurable logic blocks

12.3.1 Standard configurable logic blocks

12.3.1.1 Functionality

A number of logic blocks and timers are available for the user to adapt the configuration to the specific application needs.

- **OR** function block.
- **INVERTER** function blocks that inverts the input signal.
- **PULSETIMER** function block can be used, for example, for pulse extensions or limiting of operation of outputs, settable pulse time.
- **GATE** function block is used for whether or not a signal should be able to pass from the input to the output.
- **XOR** function block.
- **LOOPDELAY** function block used to delay the output signal one execution cycle.
- **TIMERSET** function has pick-up and drop-out delayed outputs related to the input signal. The timer has a settable time delay and must be Enabled for the input signal to activate the output with the appropriate time delay.
- **AND** function block.
- **SRMEMORY** function block is a flip-flop that can set or reset an output from two inputs respectively. Each block has two outputs where one is inverted. The memory setting controls if the block's output should reset or return to the state it was, after a power interruption. The `SET` input has priority if both `SET` and `RESET` inputs are operated simultaneously.
- **RSMEMORY** function block is a flip-flop that can reset or set an output from two inputs respectively. Each block has two outputs where one is inverted. The memory setting controls if the block's output should reset or return to the state it was, after a power interruption. The `RESET` input has priority if both `SET` and `RESET` are operated simultaneously.

12.3.1.2 OR function block

Identification

Function description	IEC 61850 identification	IEC 60617 identification	ANSI/IEEE C37.2 device number
OR Function block	OR	-	-

Functionality

The OR function is used to form general combinatory expressions with boolean variables. The OR function block has six inputs and two outputs. One of the outputs is inverted.

Function block

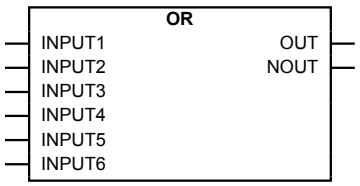

Figure 114: OR function block

Signals

Table 219: OR Input signals

Name	Type	Default	Description
INPUT1	BOOLEAN	0	Input signal 1
INPUT2	BOOLEAN	0	Input signal 2
INPUT3	BOOLEAN	0	Input signal 3
INPUT4	BOOLEAN	0	Input signal 4
INPUT5	BOOLEAN	0	Input signal 5
INPUT6	BOOLEAN	0	Input signal 6

Table 220: OR Output signals

Name	Type	Description
OUT	BOOLEAN	Output signal
NOUT	BOOLEAN	Inverted output signal

Settings

The function does not have any parameters available in Local HMI or Protection and Control IED Manager (PCM600).

12.3.1.3 Inverter function block INVERTER

Identification

Function description	IEC 61850 identification	IEC 60617 identification	ANSI/IEEE C37.2 device number
Inverter function block	INVERTER	-	-

Function block

IEC09000287-1-en.vsd

Figure 115: INVERTER function block

Signals

Table 221: INVERTER Input signals

Name	Type	Default	Description
INPUT	BOOLEAN	0	Input signal

Table 222: INVERTER Output signals

Name	Type	Description
OUT	BOOLEAN	Output signal

Settings

The function does not have any parameters available in Local HMI or Protection and Control IED Manager (PCM600).

12.3.1.4 PULSETIMER function block

Identification

Function description	IEC 61850 identification	IEC 60617 identification	ANSI/IEEE C37.2 device number
PULSETIMER function block	PULSETIMER	-	-

Functionality

The pulse function can be used, for example for pulse extensions or limiting of operation of outputs. The PULSETIMER has a settable length.

Function block

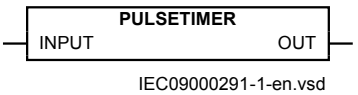

Figure 116: PULSETIMER function block

Signals

Table 223: PULSETIMER Input signals

Name	Type	Default	Description
INPUT	BOOLEAN	0	Input signal

Table 224: PULSETIMER Output signals

Name	Type	Description
OUT	BOOLEAN	Output signal

Settings

Table 225: PULSETIMER Non group settings (basic)

Name	Values (Range)	Unit	Step	Default	Description
t	0.000 - 90000.000	s	0.001	0.010	Pulse time length

12.3.1.5 Controllable gate function block GATE

Identification

Function description	IEC 61850 identification	IEC 60617 identification	ANSI/IEEE C37.2 device number
Controllable gate function block	GATE	-	-

Functionality

The GATE function block is used for controlling if a signal should pass from the input to the output or not, depending on setting.

Function block

Figure 117: GATE function block

Signals

Table 226: GATE Input signals

Name	Type	Default	Description
INPUT	BOOLEAN	0	Input signal

Table 227: GATE Output signals

Name	Type	Description
OUT	BOOLEAN	Output signal

Settings

Table 228: GATE Group settings (basic)

Name	Values (Range)	Unit	Step	Default	Description
Operation	Disabled Enabled	-	-	Disabled	Operation Disabled/Enabled

12.3.1.6 Exclusive OR function block XOR

Identification

Function description	IEC 61850 identification	IEC 60617 identification	ANSI/IEEE C37.2 device number
Exclusive OR function block	XOR	-	-

Functionality

The exclusive OR function (XOR) is used to generate combinatory expressions with boolean variables. XOR has two inputs and two outputs. One of the outputs is inverted. The output signal is 1 if the input signals are different and 0 if they are the same.

Function block

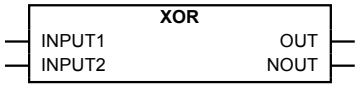

Figure 118: XOR function block

Signals

Table 229: XOR Input signals

Name	Type	Default	Description
INPUT1	BOOLEAN	0	Input signal 1
INPUT2	BOOLEAN	0	Input signal 2

Table 230: XOR Output signals

Name	Type	Description
OUT	BOOLEAN	Output signal
NOUT	BOOLEAN	Inverted output signal

Settings

The function does not have any parameters available in Local HMI or Protection and Control IED Manager (PCM600).

12.3.1.7 Loop delay function block LOOPDELAY

Function description	IEC 61850 identification	IEC 60617 identification	ANSI/IEEE C37.2 device number
Logic loop delay function block	LOOPDELAY	-	-

The Logic loop delay function block (LOOPDELAY) function is used to delay the output signal one execution cycle.

Function block

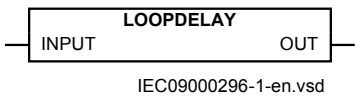

Figure 119: LOOPDELAY function block

Signals

Table 231: LOOPDELAY Input signals

Name	Type	Default	Description
INPUT	BOOLEAN	0	Input signal

Table 232: LOOPDELAY Output signals

Name	Type	Description
OUT	BOOLEAN	Output signal, signal is delayed one execution cycle

Settings

The function does not have any parameters available in Local HMI or Protection and Control IED Manager (PCM600).

12.3.1.8 Timer function block TIMERSET

Identification

Function description	IEC 61850 identification	IEC 60617 identification	ANSI/IEEE C37.2 device number
Timer function block	TIMERSET	-	-

Functionality

The function block TIMERSET has pick-up and drop-out delayed outputs related to the input signal. The timer has a settable time delay (*t*).

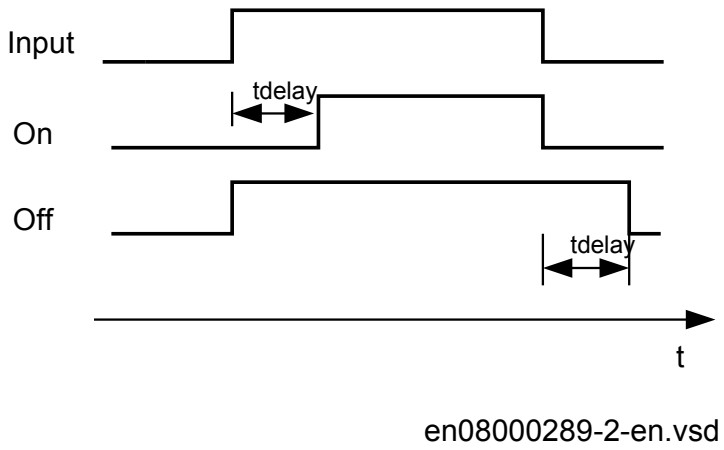

Figure 120: TIMERSET Status diagram

Function block

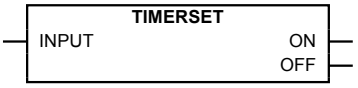

IEC09000290-1-en.vsd

Figure 121: TIMERSET function block

Signals

Table 233: TIMERSET Input signals

Name	Type	Default	Description
INPUT	BOOLEAN	0	Input signal

Table 234: TIMERSET Output signals

Name	Type	Description
ON	BOOLEAN	Output signal, pick-up delayed
OFF	BOOLEAN	Output signal, drop-out delayed

Settings

Table 235: TIMERSET Group settings (basic)

Name	Values (Range)	Unit	Step	Default	Description
Operation	Disabled Enabled	-	-	Disabled	Operation Disabled/Enabled
t	0.000 - 90000.000	s	0.001	0.000	Delay for settable timer n

12.3.1.9 AND function block

Identification

Function description	IEC 61850 identification	IEC 60617 identification	ANSI/IEEE C37.2 device number
AND function block	AND	-	-

Functionality

The AND function is used to form general combinatory expressions with boolean variables. The AND function block has four inputs and two outputs.

Default value on all four inputs are logical 1 which makes it possible for the user to just use the required number of inputs and leave the rest un-connected. The output OUT has a default value 0 initially, which suppresses one cycle pulse if the function has been put in the wrong execution order.

Function block

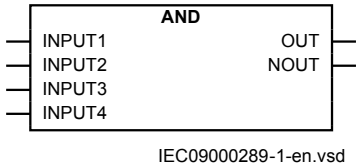

Figure 122: AND function block

Signals

Table 236: AND Input signals

Name	Type	Default	Description
INPUT1	BOOLEAN	1	Input signal 1
INPUT2	BOOLEAN	1	Input signal 2
INPUT3	BOOLEAN	1	Input signal 3
INPUT4	BOOLEAN	1	Input signal 4

Table 237: AND Output signals

Name	Type	Description
OUT	BOOLEAN	Output signal
NOUT	BOOLEAN	Inverted output signal

Settings

The function does not have any parameters available in Local HMI or Protection and Control IED Manager (PCM600).

12.3.1.10 Set-reset memory function block SRMEMORY

Identification

Function description	IEC 61850 identification	IEC 60617 identification	ANSI/IEEE C37.2 device number
Set-reset memory function block	SRMEMORY	-	-

Functionality

The Set-Reset function SRMEMORY is a flip-flop with memory that can set or reset an output from two inputs respectively. Each SRMEMORY function block has two outputs, where one is inverted. The memory setting controls if the flip-flop after a power interruption will return the state it had before or if it will be reset. For a Set-Reset flip-flop, SET input has higher priority over RESET input.

Table 238: Truth table for the Set-Reset (SRMEMORY) function block

SET	RESET	OUT	NOUT
1	0	1	0
0	1	0	1
1	1	1	0
0	0	0	1

Function block

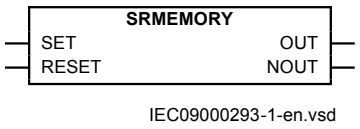

Figure 123: SRMEMORY function block

Signals

Table 239: SRMEMORY Input signals

Name	Type	Default	Description
SET	BOOLEAN	0	Input signal to set
RESET	BOOLEAN	0	Input signal to reset

Table 240: SRMEMORY Output signals

Name	Type	Description
OUT	BOOLEAN	Output signal
NOUT	BOOLEAN	Inverted output signal

Settings

Table 241: SRMEMORY Group settings (basic)

Name	Values (Range)	Unit	Step	Default	Description
Memory	Off On	-	-	On	Operating mode of the memory function

12.3.1.11 Reset-set with memory function block RSMEMORY

Identification

Function description	IEC 61850 identification	IEC 60617 identification	ANSI/IEEE C37.2 device number
Reset-set with memory function block	RSMEMORY	-	-

Functionality

The Reset-set with memory function block (RSMEMORY) is a flip-flop with memory that can reset or set an output from two inputs respectively. Each RSMEMORY function block has two outputs, where one is inverted. The memory setting controls if the flip-flop after a power interruption will return the state it had before or if it will be reset. For a Reset-Set flip-flop, RESET input has higher priority over SET input.

Table 242: Truth table for RSMEMORY function block

RESET	SET	OUT	NOUT
0	0	Last value	Inverted last value
0	1	0	1
1	0	1	0
1	1	0	1

Function block

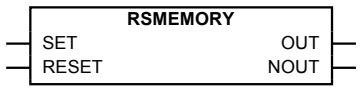

IEC09000294-1-en.vsd

Figure 124: RSMEMORY function block

Signals

Table 243: RSMEMORY Input signals

Name	Type	Default	Description
SET	BOOLEAN	0	Input signal to set
RESET	BOOLEAN	0	Input signal to reset

Table 244: RSMEMORY Output signals

Name	Type	Description
OUT	BOOLEAN	Output signal
NOUT	BOOLEAN	Inverted output signal

Settings

Table 245: RSMEMORY Group settings (basic)

Name	Values (Range)	Unit	Step	Default	Description
Memory	Disabled Enabled	-	-	Enabled	Operating mode of the memory function

12.3.2 Technical data

Table 246: Configurable logic blocks

Logic block	Quantity with cycle time			Range or value	Accuracy
	5 ms	20 ms	100 ms		
AND	60	60	160	-	-
OR	60	60	160	-	-
XOR	10	10	20	-	-
INVERTER	30	30	80	-	-
SRMEMORY	10	10	20	-	-
RSMEMORY	10	10	20	-	-
GATE	10	10	20	-	-
PULSETIMER	10	10	20	(0.000–90000.000) s	± 0.5% ± 25 ms for 20 ms cycle time
TIMERSET	10	10	20	(0.000–90000.000) s	± 0.5% ± 25 ms for 20 ms cycle time
LOOPDELAY	10	10	20		

12.4 Fixed signals FXDSIGN

12.4.1 Identification

Function description	IEC 61850 identification	IEC 60617 identification	ANSI/IEEE C37.2 device number
Fixed signals	FXDSIGN	-	-

12.4.2 Functionality

The Fixed signals function (FXDSIGN) generates a number of pre-set (fixed) signals that can be used in the configuration of an IED, either for forcing the unused inputs in other function blocks to a certain level/value, or for creating certain logic.

12.4.3 Function block

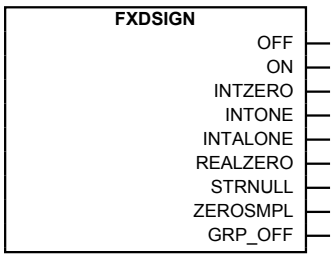

Figure 125: FXDSIGN function block

12.4.4 Signals

Table 247: FXDSIGN Output signals

Name	Type	Description
OFF	BOOLEAN	Boolean signal fixed off
ON	BOOLEAN	Boolean signal fixed on
INTZERO	INTEGER	Integer signal fixed zero
INTONE	INTEGER	Integer signal fixed one
INTALONE	INTEGER	Integer signal fixed all ones
REALZERO	REAL	Real signal fixed zero
Table continues on next page		

Name	Type	Description
STRNULL	STRING	String signal with no characters
ZEROSMPL	GROUP SIGNAL	Channel id for zero sample
GRP_OFF	GROUP SIGNAL	Group signal fixed off

12.4.5 Settings

The function does not have any settings available in Local HMI or Protection and Control IED Manager (PCM600).

12.4.6 Operation principle

There are nine outputs from FXDSIGN function block:

- OFF is a boolean signal, fixed to OFF (boolean 0) value
- ON is a boolean signal, fixed to ON (boolean 1) value
- INTZERO is an integer number, fixed to integer value 0
- INTONE is an integer number, fixed to integer value 1
- INTALONE is an integer value FFFF (hex)
- REALZERO is a floating point real number, fixed to 0.0 value
- STRNULL is a string, fixed to an empty string (null) value
- ZEROSMPL is a channel index, fixed to 0 value
- GRP_OFF is a group signal, fixed to 0 value

12.5 Boolean 16 to integer conversion B16I

12.5.1 Identification

Function description	IEC 61850 identification	IEC 60617 identification	ANSI/IEEE C37.2 device number
Boolean 16 to integer conversion	B16I	-	-

12.5.2 Functionality

Boolean 16 to integer conversion function (B16I) is used to transform a set of 16 binary (logical) signals into an integer.

12.5.3 Function block

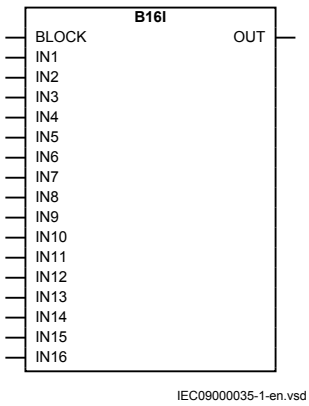

Figure 126: B16I function block

12.5.4 Signals

Table 248: B16I Input signals

Name	Type	Default	Description
BLOCK	BOOLEAN	0	Block of function
IN1	BOOLEAN	0	Input 1
IN2	BOOLEAN	0	Input 2
IN3	BOOLEAN	0	Input 3
IN4	BOOLEAN	0	Input 4
IN5	BOOLEAN	0	Input 5
IN6	BOOLEAN	0	Input 6
IN7	BOOLEAN	0	Input 7
IN8	BOOLEAN	0	Input 8
IN9	BOOLEAN	0	Input 9
IN10	BOOLEAN	0	Input 10
IN11	BOOLEAN	0	Input 11
IN12	BOOLEAN	0	Input 12
IN13	BOOLEAN	0	Input 13
IN14	BOOLEAN	0	Input 14
IN15	BOOLEAN	0	Input 15
IN16	BOOLEAN	0	Input 16

Table 249: B16I Output signals

Name	Type	Description
OUT	INTEGER	Output value

12.5.5 Settings

The function does not have any parameters available in local HMI or Protection and Control IED Manager (PCM600)

12.5.6 Monitored data

Table 250: B16I Monitored data

Name	Type	Values (Range)	Unit	Description
OUT	INTEGER	-	-	Output value

12.5.7 Operation principle

Boolean 16 to integer conversion function (B16I) is used to transform a set of 16 binary (logical) signals into an integer. The BLOCK input will freeze the output at the last value.

12.6 Boolean 16 to integer conversion with logic node representation B16IFCVI

12.6.1 Identification

Function description	IEC 61850 identification	IEC 60617 identification	ANSI/IEEE C37.2 device number
Boolean 16 to integer conversion with logic node representation	B16IFCVI	-	-

12.6.2 Functionality

Boolean 16 to integer conversion with logic node representation function (B16IFCVI) is used to transform a set of 16 binary (logical) signals into an integer.

12.6.3 Function block

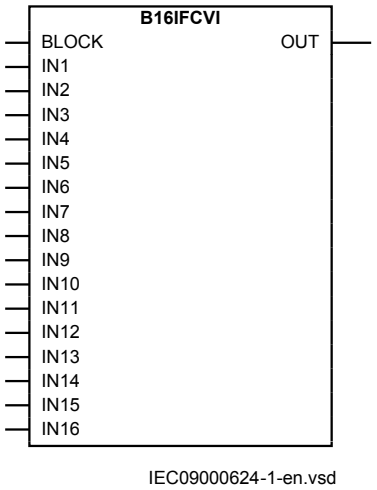

Figure 127: B16IFCVI function block

12.6.4 Signals

Table 251: B16IFCVI Input signals

Name	Type	Default	Description
BLOCK	BOOLEAN	0	Block of function
IN1	BOOLEAN	0	Input 1
IN2	BOOLEAN	0	Input 2
IN3	BOOLEAN	0	Input 3
IN4	BOOLEAN	0	Input 4
IN5	BOOLEAN	0	Input 5
IN6	BOOLEAN	0	Input 6
IN7	BOOLEAN	0	Input 7
IN8	BOOLEAN	0	Input 8
IN9	BOOLEAN	0	Input 9
IN10	BOOLEAN	0	Input 10
IN11	BOOLEAN	0	Input 11
IN12	BOOLEAN	0	Input 12
IN13	BOOLEAN	0	Input 13
IN14	BOOLEAN	0	Input 14
IN15	BOOLEAN	0	Input 15
IN16	BOOLEAN	0	Input 16

Table 252: B16IFCVI Output signals

Name	Type	Description
OUT	INTEGER	Output value

12.6.5 Settings

The function does not have any parameters available in local HMI or Protection and Control IED Manager (PCM600)

12.6.6 Monitored data

Table 253: B16IFCVI Monitored data

Name	Type	Values (Range)	Unit	Description
OUT	INTEGER	-	-	Output value

12.6.7 Operation principle

Boolean 16 to integer conversion with logic node representation function (B16IFCVI) is used to transform a set of 16 binary (logical) signals into an integer. The BLOCK input will freeze the output at the last value.

12.7 Integer to boolean 16 conversion IB16A

12.7.1 Identification

Function description	IEC 61850 identification	IEC 60617 identification	ANSI/IEEE C37.2 device number
Integer to boolean 16 conversion	IB16A	-	-

12.7.2 Functionality

Integer to boolean 16 conversion function (IB16A) is used to transform an integer into a set of 16 binary (logical) signals.

12.7.3 Function block

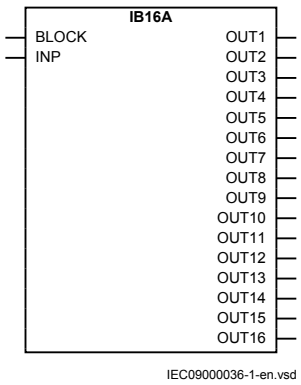

Figure 128: IB16A function block

12.7.4 Signals

Table 254: IB16A Input signals

Name	Type	Default	Description
BLOCK	BOOLEAN	0	Block of function
INP	INTEGER	0	INP

Table 255: IB16A Output signals

Name	Type	Description
OUT1	BOOLEAN	Output 1
OUT2	BOOLEAN	Output 2
OUT3	BOOLEAN	Output 3
OUT4	BOOLEAN	Output 4
OUT5	BOOLEAN	Output 5
OUT6	BOOLEAN	Output 6
OUT7	BOOLEAN	Output 7
OUT8	BOOLEAN	Output 8
OUT9	BOOLEAN	Output 9
OUT10	BOOLEAN	Output 10
OUT11	BOOLEAN	Output 11
OUT12	BOOLEAN	Output 12
OUT13	BOOLEAN	Output 13

Table continues on next page

Name	Type	Description
OUT14	BOOLEAN	Output 14
OUT15	BOOLEAN	Output 15
OUT16	BOOLEAN	Output 16

12.7.5 Settings

The function does not have any parameters available in local HMI or Protection and Control IED Manager (PCM600)

12.7.6 Operation principle

Integer to boolean 16 conversion function (IB16A) is used to transform an integer into a set of 16 binary (logical) signals. IB16A function is designed for receiving the integer input locally. The BLOCK input will freeze the logical outputs at the last value.

12.8 Integer to boolean 16 conversion with logic node representation IB16FCVB

12.8.1 Identification

Function description	IEC 61850 identification	IEC 60617 identification	ANSI/IEEE C37.2 device number
Integer to boolean 16 conversion with logic node representation	IB16FCVB	-	-

12.8.2 Functionality

Integer to boolean conversion with logic node representation function (IB16FCVB) is used to transform an integer to 16 binary (logic) signals.

IB16FCVB function can receive remote values over IEC61850 depending on the operator position input (PSTO).

12.8.3 Function block

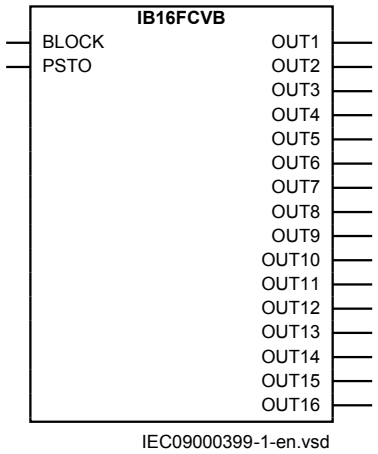

Figure 129: IB16FCVB function block

12.8.4 Signals

Table 256: IB16FCVB Input signals

Name	Type	Default	Description
BLOCK	BOOLEAN	0	Block of function
PSTO	INTEGER	1	Operator place selection

Table 257: IB16FCVB Output signals

Name	Type	Description
OUT1	BOOLEAN	Output 1
OUT2	BOOLEAN	Output 2
OUT3	BOOLEAN	Output 3
OUT4	BOOLEAN	Output 4
OUT5	BOOLEAN	Output 5
OUT6	BOOLEAN	Output 6
OUT7	BOOLEAN	Output 7
OUT8	BOOLEAN	Output 8
OUT9	BOOLEAN	Output 9
OUT10	BOOLEAN	Output 10
OUT11	BOOLEAN	Output 11
OUT12	BOOLEAN	Output 12

Table continues on next page

Name	Type	Description
OUT13	BOOLEAN	Output 13
OUT14	BOOLEAN	Output 14
OUT15	BOOLEAN	Output 15
OUT16	BOOLEAN	Output 16

12.8.5 Settings

The function does not have any parameters available in local HMI or Protection and Control IED Manager (PCM600)

12.8.6 Operation principle

Integer to boolean conversion with logic node representation function (IB16FCVB) is used to transform an integer into a set of 16 binary (logical) signals. IB16FCVB function can receive an integer from a station computer – for example, over IEC 61850. The BLOCK input will freeze the logical outputs at the last value.

The operator position input (PSTO) determines the operator place. The integer number can be written to the block while in “Remote”. If PSTO is in ”Off” or ”Local”, then no change is applied to the outputs.

Section 13 Monitoring

13.1 Measurements

13.1.1 Functionality

Measurement functions is used for power system measurement, supervision and reporting to the local HMI, monitoring tool within PCM600 or to station level for example, via IEC 61850. The possibility to continuously monitor measured values of active power, reactive power, currents, voltages, frequency, power factor etc. is vital for efficient production, transmission and distribution of electrical energy. It provides to the system operator fast and easy overview of the present status of the power system. Additionally, it can be used during testing and commissioning of protection and control IEDs in order to verify proper operation and connection of instrument transformers (CTs and VTs). During normal service by periodic comparison of the measured value from the IED with other independent meters the proper operation of the IED analog measurement chain can be verified. Finally, it can be used to verify proper direction orientation for distance or directional overcurrent protection function.

The available measured values of an IED are depending on the actual hardware (TRM) and the logic configuration made in PCM600.

All measured values can be supervised with four settable limits that is, low-low limit, low limit, high limit and high-high limit. A zero clamping reduction is also supported, that is, the measured value below a settable limit is forced to zero which reduces the impact of noise in the inputs. There are no interconnections regarding any settings or parameters, neither between functions nor between signals within each function.

Zero clampings are handled by *ZeroDb* for each signal separately for each of the functions. For example, the zero clamping of U12 is handled by *VLZeroDB* in VMMXU, zero clamping of I1 is handled by *ILZeroDb* in CMMXU.

Dead-band supervision can be used to report measured signal value to station level when change in measured value is above set threshold limit or time integral of all changes since the last time value updating exceeds the threshold limit. Measure value can also be based on periodic reporting.

The measurement function, CVMMXN, provides the following power system quantities:

- P, Q and S: three phase active, reactive and apparent power
- PF: power factor
- V: phase-to-phase voltage magnitude
- I: phase current magnitude
- F: power system frequency

The output values are displayed in the local HMI under **Main menu/Tests/Function status/Monitoring/CVMMXN/Outputs**

The measuring functions CMMXU, VNMMXU and VMMXU provide physical quantities:

- I: phase currents (magnitude and angle) (CMMXU)
- V: voltages (phase-to-ground and phase-to-phase voltage, magnitude and angle) (VMMXU, VNMMXU)

It is possible to calibrate the measuring function above to get better then class 0.5 presentation. This is accomplished by angle and magnitude compensation at 5, 30 and 100% of rated current and at 100% of rated voltage.

The power system quantities provided, depends on the actual hardware, (TRM) and the logic configuration made in PCM600.

The measuring functions CMSQI and VMSQI provide sequence component quantities:

- I: sequence currents (positive, zero, negative sequence, magnitude and angle)
- V: sequence voltages (positive, zero and negative sequence, magnitude and angle).

The CVMMXN function calculates three-phase power quantities by using fundamental frequency phasors (DFT values) of the measured current respectively voltage signals. The measured power quantities are available either, as instantaneously calculated quantities or, averaged values over a period of time (low pass filtered) depending on the selected settings.

13.1.2 Measurements CVMMXN

13.1.2.1 Identification

Function description	IEC 61850 identification	IEC 60617 identification	ANSI/IEEE C37.2 device number
Measurements	CVMMXN	*P, Q, S, I, U, f*	-

13.1.2.2 Function block

The available function blocks of an IED are depending on the actual hardware (TRM) and the logic configuration made in PCM600.

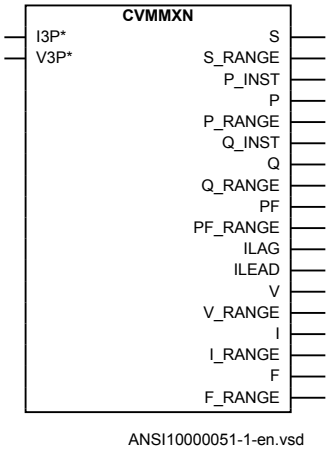

Figure 130: CVMMXN function block

13.1.2.3 Signals

Table 258: CVMMXN Input signals

Name	Type	Default	Description
I3P	GROUP SIGNAL	-	Three phase group signal for current inputs
V3P	GROUP SIGNAL	-	Three phase group signal for voltage inputs

Table 259: CVMMXN Output signals

Name	Type	Description
S	REAL	Apparent power magnitude of deadband value
S_RANGE	INTEGER	Apparent power range
P_INST	REAL	Active power
P	REAL	Active power magnitude of deadband value
P_RANGE	INTEGER	Active power range
Q_INST	REAL	Reactive power
Q	REAL	Reactive power magnitude of deadband value
Q_RANGE	INTEGER	Reactive power range
Table continues on next page		

Name	Type	Description
PF	REAL	Power factor magnitude of deadband value
PF_RANGE	INTEGER	Power factor range
ILAG	BOOLEAN	Current is lagging voltage
ILEAD	BOOLEAN	Current is leading voltage
V	REAL	Calculated voltage magnitude of deadband value
V_RANGE	INTEGER	Calcuated voltage range
I	REAL	Calculated current magnitude of deadband value
I_RANGE	INTEGER	Calculated current range
F	REAL	System frequency magnitude of deadband value
F_RANGE	INTEGER	System frequency range

13.1.2.4 Settings

Table 260: CVMMXN Non group settings (basic)

Name	Values (Range)	Unit	Step	Default	Description
Operation	Disabled Enabled	-	-	Disabled	Disable/Enable Operation
GlobalBaseSel	1 - 6	-	1	1	Selection of one of the Global Base Value groups
Mode	A, B, C Arone Pos Seq AB BC CA A B C	-	-	A, B, C	Selection of measured current and voltage
PowMagFact	0.000 - 6.000	-	0.001	1.000	Magnitude factor to scale power calculations
PowAngComp	-180.0 - 180.0	Deg	0.1	0.0	Angle compensation for phase shift between measured I & V
k	0.00 - 1.00	-	0.01	0.00	Low pass filter coefficient for power measurement
SLowLim	0.0 - 2000.0	%SB	0.1	80.0	Low limit in % of SBase
SLowLowLim	0.0 - 2000.0	%SB	0.1	60.0	Low Low limit in % of SBase
SMin	0.0 - 2000.0	%SB	0.1	50.0	Minimum value in % of SBase
SMax	0.0 - 2000.0	%SB	0.1	200.0	Maximum value in % of SBase
SRepTyp	Cyclic Dead band Int deadband	-	-	Cyclic	Reporting type
PMin	-2000.0 - 2000.0	%SB	0.1	-200.0	Minimum value in % of SBase

Table continues on next page

Name	Values (Range)	Unit	Step	Default	Description
PMax	-2000.0 - 2000.0	%SB	0.1	200.0	Maximum value in % of SBase
PRepTyp	Cyclic Dead band Int deadband	-	-	Cyclic	Reporting type
QMin	-2000.0 - 2000.0	%SB	0.1	-200.0	Minimum value in % of SBase
QMax	-2000.0 - 2000.0	%SB	0.1	200.0	Maximum value in % of SBase
QRepTyp	Cyclic Dead band Int deadband	-	-	Cyclic	Reporting type
PFMin	-1.000 - 1.000	-	0.001	-1.000	Minimum value
PFMax	-1.000 - 1.000	-	0.001	1.000	Maximum value
PFRepTyp	Cyclic Dead band Int deadband	-	-	Cyclic	Reporting type
VMin	0.0 - 200.0	%VB	0.1	50.0	Minimum value in % of UBase
VMax	0.0 - 200.0	%VB	0.1	200.0	Maximum value in % of UBase
VRepTyp	Cyclic Dead band Int deadband	-	-	Cyclic	Reporting type
IMin	0.0 - 500.0	%IB	0.1	50.0	Minimum value in % of IBase
IMax	0.0 - 500.0	%IB	0.1	200.0	Maximum value in % of IBase
IRepTyp	Cyclic Dead band Int deadband	-	-	Cyclic	Reporting type
FrMin	0.000 - 100.000	Hz	0.001	0.000	Minimum value
FrMax	0.000 - 100.000	Hz	0.001	70.000	Maximum value
FrRepTyp	Cyclic Dead band Int deadband	-	-	Cyclic	Reporting type

Table 261: CVMMXN Non group settings (advanced)

Name	Values (Range)	Unit	Step	Default	Description
SDbRepInt	1 - 300	Type	1	10	Cycl: Report interval (s), Db: In % of range, Int Db: In %s
SZeroDb	0 - 100000	m%	1	500	Zero point clamping in 0.001% of range
SHiHiLim	0.0 - 2000.0	%SB	0.1	150.0	High High limit in % of SBase
SHiLim	0.0 - 2000.0	%SB	0.1	120.0	High limit in % of SBase
PHiHiLim	-2000.0 - 2000.0	%SB	0.1	150.0	High High limit in % of SBase
SLimHyst	0.000 - 100.000	%	0.001	5.000	Hysteresis value in % of range (common for all limits)

Table continues on next page

Name	Values (Range)	Unit	Step	Default	Description
PDbRepInt	1 - 300	Type	1	10	Cycl: Report interval (s), Db: In % of range, Int Db: In %s
PZeroDb	0 - 100000	m%	1	500	Zero point clamping
PHiLim	-2000.0 - 2000.0	%SB	0.1	120.0	High limit in % of SBase
PLowLim	-2000.0 - 2000.0	%SB	0.1	-120.0	Low limit in % of SBase
PLowLowLim	-2000.0 - 2000.0	%SB	0.1	-150.0	Low Low limit in % of SBase
PLimHyst	0.000 - 100.000	%	0.001	5.000	Hysteresis value in % of range (common for all limits)
QDbRepInt	1 - 300	Type	1	10	Cycl: Report interval (s), Db: In % of range, Int Db: In %s
QZeroDb	0 - 100000	m%	1	500	Zero point clamping
QHiHiLim	-2000.0 - 2000.0	%SB	0.1	150.0	High High limit in % of SBase
QHiLim	-2000.0 - 2000.0	%SB	0.1	120.0	High limit in % of SBase
QLowLim	-2000.0 - 2000.0	%SB	0.1	-120.0	Low limit in % of SBase
QLowLowLim	-2000.0 - 2000.0	%SB	0.1	-150.0	Low Low limit in % of SBase
QLimHyst	0.000 - 100.000	%	0.001	5.000	Hysteresis value in % of range (common for all limits)
PFDbRepInt	1 - 300	Type	1	10	Cycl: Report interval (s), Db: In % of range, Int Db: In %s
PFZeroDb	0 - 100000	m%	1	500	Zero point clamping
PFHiHiLim	-1.000 - 1.000	-	0.001	1.000	High High limit (physical value)
PFHiLim	-1.000 - 1.000	-	0.001	0.800	High limit (physical value)
PFLowLim	-1.000 - 1.000	-	0.001	-0.800	Low limit (physical value)
PFLowLowLim	-1.000 - 1.000	-	0.001	-1.000	Low Low limit (physical value)
PFLimHyst	0.000 - 100.000	%	0.001	5.000	Hysteresis value in % of range (common for all limits)
VDbRepInt	1 - 300	Type	1	10	Cycl: Report interval (s), Db: In % of range, Int Db: In %s
VZeroDb	0 - 100000	m%	1	500	Zero point clamping
VHiHiLim	0.0 - 200.0	%VB	0.1	150.0	High High limit in % of UBase
VHiLim	0.0 - 200.0	%VB	0.1	120.0	High limit in % of UBase
VLowLim	0.0 - 200.0	%VB	0.1	80.0	Low limit in % of UBase
VLowLowLim	0.0 - 200.0	%VB	0.1	60.0	Low Low limit in % of UBase
VLimHyst	0.000 - 100.000	%	0.001	5.000	Hysteresis value in % of range (common for all limits)
IDbRepInt	1 - 300	Type	1	10	Cycl: Report interval (s), Db: In % of range, Int Db: In %s
IZeroDb	0 - 100000	m%	1	500	Zero point clamping
IHiHiLim	0.0 - 500.0	%IB	0.1	150.0	High High limit in % of IBase
IHiLim	0.0 - 500.0	%IB	0.1	120.0	High limit in % of IBase

Table continues on next page

Name	Values (Range)	Unit	Step	Default	Description
ILowLim	0.0 - 500.0	%IB	0.1	80.0	Low limit in % of IBase
ILowLowLim	0.0 - 500.0	%IB	0.1	60.0	Low Low limit in % of IBase
ILimHyst	0.000 - 100.000	%	0.001	5.000	Hysteresis value in % of range (common for all limits)
FrDbRepInt	1 - 300	Type	1	10	Cycl: Report interval (s), Db: In % of range, Int Db: In %s
FrZeroDb	0 - 100000	m%	1	500	Zero point clamping
FrHiHiLim	0.000 - 100.000	Hz	0.001	65.000	High High limit (physical value)
FrHiLim	0.000 - 100.000	Hz	0.001	63.000	High limit (physical value)
FrLowLim	0.000 - 100.000	Hz	0.001	47.000	Low limit (physical value)
FrLowLowLim	0.000 - 100.000	Hz	0.001	45.000	Low Low limit (physical value)
FrLimHyst	0.000 - 100.000	%	0.001	5.000	Hysteresis value in % of range (common for all limits)
VMagComp5	-10.000 - 10.000	%	0.001	0.000	Magnitude factor to calibrate voltage at 5% of Vn
VMagComp30	-10.000 - 10.000	%	0.001	0.000	Magnitude factor to calibrate voltage at 30% of Vn
VMagComp100	-10.000 - 10.000	%	0.001	0.000	Magnitude factor to calibrate voltage at 100% of Vn
IMagComp5	-10.000 - 10.000	%	0.001	0.000	Magnitude factor to calibrate current at 5% of In
IMagComp30	-10.000 - 10.000	%	0.001	0.000	Magnitude factor to calibrate current at 30% of In
IMagComp100	-10.000 - 10.000	%	0.001	0.000	Magnitude factor to calibrate current at 100% of In
IAngComp5	-10.000 - 10.000	Deg	0.001	0.000	Angle calibration for current at 5% of In
IAngComp30	-10.000 - 10.000	Deg	0.001	0.000	Angle calibration for current at 30% of In
IAngComp100	-10.000 - 10.000	Deg	0.001	0.000	Angle calibration for current at 100% of In

13.1.2.5 Monitored data

Table 262: CVMMXN Monitored data

Name	Type	Values (Range)	Unit	Description
S	REAL	-	MVA	Apparent power magnitude of deadband value
P	REAL	-	MW	Active power magnitude of deadband value
Q	REAL	-	MVAr	Reactive power magnitude of deadband value
PF	REAL	-	-	Power factor magnitude of deadband value

Table continues on next page

Name	Type	Values (Range)	Unit	Description
V	REAL	-	kV	Calculated voltage magnitude of deadband value
I	REAL	-	A	Calculated current magnitude of deadband value
F	REAL	-	Hz	System frequency magnitude of deadband value

13.1.3 Phase current measurement CMMXU

13.1.3.1 Identification

Function description	IEC 61850 identification	IEC 60617 identification	ANSI/IEEE C37.2 device number
Phase current measurement	CMMXU	I	-

13.1.3.2 Function block

The available function blocks of an IED are depending on the actual hardware (TRM) and the logic configuration made in PCM600.

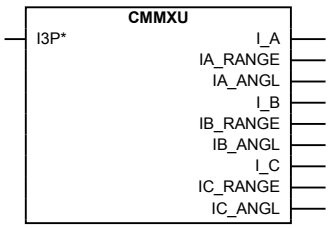

Figure 131: CMMXU function block

13.1.3.3 Signals

Table 263: CMMXU Input signals

Name	Type	Default	Description
I3P	GROUP SIGNAL	-	Three phase group signal for current inputs

Table 264: CMMXU Output signals

Name	Type	Description
I_A	REAL	IA Amplitude
IA_RANGE	INTEGER	Phase A current magnitude range
IA_ANGL	REAL	IA Angle
I_B	REAL	IB Amplitude
IB_RANGE	INTEGER	Phase B current magnitude range
IB_ANGL	REAL	IB Angle
I_C	REAL	IC Amplitude
IC_RANGE	INTEGER	Phase C current magnitude range
IC_ANGL	REAL	IC Angle

13.1.3.4 Settings

Table 265: CMMXU Non group settings (basic)

Name	Values (Range)	Unit	Step	Default	Description
Operation	Disabled Enabled	-	-	Disabled	Disable/Enable Operation
GlobalBaseSel	1 - 6	-	1	1	Selection of one of the Global Base Value groups
ILDbRepInt	1 - 300	Type	1	10	Cycl: Report interval (s), Db: In % of range, Int Db: In %s
ILMax	0 - 500000	A	1	1300	Maximum value
ILRepTyp	Cyclic Dead band Int deadband	-	-	Dead band	Reporting type
ILAngDbRepInt	1 - 300	Type	1	10	Cycl: Report interval (s), Db: In % of range, Int Db: In %s

Table 266: CMMXU Non group settings (advanced)

Name	Values (Range)	Unit	Step	Default	Description
ILZeroDb	0 - 100000	m%	1	500	Zero point clamping
ILHiHiLim	0 - 500000	A	1	1200	High High limit (physical value)
ILHiLim	0 - 500000	A	1	1100	High limit (physical value)
ILLowLim	0 - 500000	A	1	0	Low limit (physical value)
ILLowLowLim	0 - 500000	A	1	0	Low Low limit (physical value)
ILMin	0 - 500000	A	1	0	Minimum value
ILLimHys	0.000 - 100.000	%	0.001	5.000	Hysteresis value in % of range and is common for all limits

Table continues on next page

Name	Values (Range)	Unit	Step	Default	Description
IMagComp5	-10.000 - 10.000	%	0.001	0.000	Magnitude factor to calibrate current at 5% of In
IMagComp30	-10.000 - 10.000	%	0.001	0.000	Magnitude factor to calibrate current at 30% of In
IMagComp100	-10.000 - 10.000	%	0.001	0.000	Magnitude factor to calibrate current at 100% of In
IAngComp5	-10.000 - 10.000	Deg	0.001	0.000	Angle calibration for current at 5% of In
IAngComp30	-10.000 - 10.000	Deg	0.001	0.000	Angle calibration for current at 30% of In
IAngComp100	-10.000 - 10.000	Deg	0.001	0.000	Angle calibration for current at 100% of In

13.1.3.5 Monitored data

Table 267: CMMXU Monitored data

Name	Type	Values (Range)	Unit	Description
I_A	REAL	-	A	IA Amplitude
IA_ANGL	REAL	-	deg	IA Angle
I_B	REAL	-	A	IB Amplitude
IB_ANGL	REAL	-	deg	IB Angle
I_C	REAL	-	A	IC Amplitude
IC_ANGL	REAL	-	deg	IC Angle

13.1.4 Phase-phase voltage measurement VMMXU

13.1.4.1 Identification

Function description	IEC 61850 identification	IEC 60617 identification	ANSI/IEEE C37.2 device number
Phase-phase voltage measurement	VMMXU	*U*	-

13.1.4.2 Function block

The available function blocks of an IED are depending on the actual hardware (TRM) and the logic configuration made in PCM600.

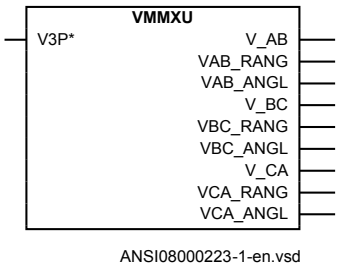

Figure 132: VMMXU function block

13.1.4.3 Signals

Table 268: VMMXU Input signals

Name	Type	Default	Description
V3P	GROUP SIGNAL	-	Three phase group signal for voltage inputs

Table 269: VMMXU Output signals

Name	Type	Description
V_AB	REAL	V_AB Amplitude
VAB_RANG	INTEGER	VAB Magnitude range
VAB_ANGL	REAL	VAB Angle
V_BC	REAL	V_BC Amplitude
VBC_RANG	INTEGER	VBC Magnitude range
VBC_ANGL	REAL	VBC Angle
V_CA	REAL	V_CA Amplitude
VCA_RANG	INTEGER	VCA Amplitude range
VCA_ANGL	REAL	VCA Angle

13.1.4.4 Settings

Table 270: VMMXU Non group settings (basic)

Name	Values (Range)	Unit	Step	Default	Description
Operation	Disabled Enabled	-	-	Disabled	Operation Disable / Enable
GlobalBaseSel	1 - 6	-	1	1	Selection of one of the Global Base Value groups
VLDbRepInt	1 - 300	Type	1	10	Cycl: Report interval (s), Db: In % of range, Int Db: In %s
VLMax	0 - 4000000	V	1	170000	Maximum value
VLRepTyp	Cyclic Dead band Int deadband	-	-	Dead band	Reporting type
VLAngDbRepInt	1 - 300	Type	1	10	Cycl: Report interval (s), Db: In % of range, Int Db: In %s

Table 271: VMMXU Non group settings (advanced)

Name	Values (Range)	Unit	Step	Default	Description
VLZeroDB	0 - 100000	m%	1	500	Zero point clamping
VLHiHilLim	0 - 4000000	V	1	160000	High High limit (physical value)
VLHiLim	0 - 4000000	V	1	150000	High limit (physical value)
VLLowLim	0 - 4000000	V	1	125000	Low limit (physical value)
VLowLowLim	0 - 4000000	V	1	115000	Low Low limit (physical value)
VLMin	0 - 4000000	V	1	0	Minimum value
VLLimHys	0.000 - 100.000	V	0.001	5.000	Hysteresis value in % of range and is common for all limits

13.1.4.5 Monitored data

Table 272: VMMXU Monitored data

Name	Type	Values (Range)	Unit	Description
V_AB	REAL	-	kV	V_AB Amplitude
VAB_ANGL	REAL	-	deg	VAB Angle
V_BC	REAL	-	kV	V_BC Amplitude
VBC_ANGL	REAL	-	deg	VBC Angle
V_CA	REAL	-	kV	V_CA Amplitude
VCA_ANGL	REAL	-	deg	VCA Angle

13.1.5 Current sequence component measurement CMSQI

13.1.5.1 Identification

Function description	IEC 61850 identification	IEC 60617 identification	ANSI/IEEE C37.2 device number
Current sequence component measurement	CMSQI	*I1, I2, I0*	-

13.1.5.2 Function block

The available function blocks of an IED are depending on the actual hardware (TRM) and the logic configuration made in PCM600.

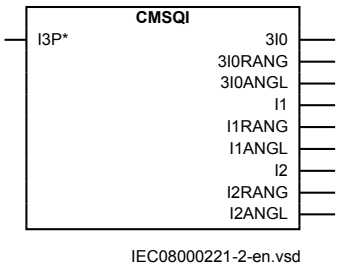

Figure 133: CMSQI function block

13.1.5.3 Signals

Table 273: CMSQI Input signals

Name	Type	Default	Description
I3P	GROUP SIGNAL	-	Three phase group signal for current inputs

Table 274: CMSQI Output signals

Name	Type	Description
3I0	REAL	3I0 Amplitude
3I0RANG	INTEGER	3I0 Magnitude range
3I0ANGL	REAL	3I0 Angle
I1	REAL	I1 Amplitude
Table continues on next page		

Name	Type	Description
I1RANG	INTEGER	I1Amplitude range
I1ANGL	REAL	I1 Angle
I2	REAL	I2 Amplitude
I2RANG	INTEGER	I2 Magnitude range
I2ANGL	REAL	I2Angle

13.1.5.4 Settings

Table 275: CMSQI Non group settings (basic)

Name	Values (Range)	Unit	Step	Default	Description
Operation	Disabled Enabled	-	-	Disabled	Operation Disable / Enable
3I0DbRepInt	1 - 300	Type	1	10	Cycl: Report interval (s), Db: In % of range, Int Db: In %s
3I0Min	0 - 500000	A	1	0	Minimum value
3I0Max	0 - 500000	A	1	3300	Maximum value
3I0RepTyp	Cyclic Dead band Int deadband	-	-	Dead band	Reporting type
3I0LimHys	0.000 - 100.000	%	0.001	5.000	Hysteresis value in % of range and is common for all limits
3I0AngDbRepInt	1 - 300	Type	1	10	Cycl: Report interval (s), Db: In % of range, Int Db: In %s
I1DbRepInt	1 - 300	Type	1	10	Cycl: Report interval (s), Db: In % of range, Int Db: In %s
I1Min	0 - 500000	A	1	0	Minimum value
I1Max	0 - 500000	A	1	1300	Maximum value
I1RepTyp	Cyclic Dead band Int deadband	-	-	Dead band	Reporting type
I1AngDbRepInt	1 - 300	Type	1	10	Cycl: Report interval (s), Db: In % of range, Int Db: In %s
I2DbRepInt	1 - 300	Type	1	10	Cycl: Report interval (s), Db: In % of range, Int Db: In %s
I2Min	0 - 500000	A	1	0	Minimum value
I2Max	0 - 500000	A	1	1300	Maximum value
I2RepTyp	Cyclic Dead band Int deadband	-	-	Dead band	Reporting type
I2LimHys	0.000 - 100.000	%	0.001	5.000	Hysteresis value in % of range and is common for all limits
I2AngDbRepInt	1 - 300	Type	1	10	Cycl: Report interval (s), Db: In % of range, Int Db: In %s

Table 276: CMSQI Non group settings (advanced)

Name	Values (Range)	Unit	Step	Default	Description
3I0ZeroDb	0 - 100000	m%	1	500	Zero point clamping
3I0HiHiLim	0 - 500000	A	1	3600	High High limit (physical value)
3I0HiLim	0 - 500000	A	1	3300	High limit (physical value)
3I0LowLim	0 - 500000	A	1	0	Low limit (physical value)
3I0LowLowLim	0 - 500000	A	1	0	Low Low limit (physical value)
I1ZeroDb	0 - 100000	m%	1	500	Zero point clamping
I1HiHiLim	0 - 500000	A	1	1200	High High limit (physical value)
I1HiLim	0 - 500000	A	1	1100	High limit (physical value)
I1LowLim	0 - 500000	A	1	0	Low limit (physical value)
I1LowLowLim	0 - 500000	A	1	0	Low Low limit (physical value)
I1LimHys	0.000 - 100.000	%	0.001	5.000	Hysteresis value in % of range and is common for all limits
I2ZeroDb	0 - 100000	m%	1	500	Zero point clamping
I2HiHiLim	0 - 500000	A	1	1200	High High limit (physical value)
I2HiLim	0 - 500000	A	1	1100	High limit (physical value)
I2LowLim	0 - 500000	A	1	0	Low limit (physical value)
I2LowLowLim	0 - 500000	A	1	0	Low Low limit (physical value)

13.1.5.5 Monitored data

Table 277: CMSQI Monitored data

Name	Type	Values (Range)	Unit	Description
3I0	REAL	-	A	3I0 Amplitude
3I0ANGL	REAL	-	deg	3I0 Angle
I1	REAL	-	A	I1 Amplitude
I1ANGL	REAL	-	deg	I1 Angle
I2	REAL	-	A	I2 Amplitude
I2ANGL	REAL	-	deg	I2Angle

13.1.6 Voltage sequence measurement VMSQI

13.1.6.1 Identification

Function description	IEC 61850 identification	IEC 60617 identification	ANSI/IEEE C37.2 device number
Voltage sequence measurement	VMSQI	*U1, U2, U0*	-

13.1.6.2 Function block

The available function blocks of an IED are depending on the actual hardware (TRM) and the logic configuration made in PCM600.

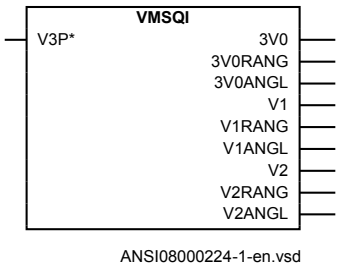

Figure 134: VMSQI function block

13.1.6.3 Signals

Table 278: VMSQI Input signals

Name	Type	Default	Description
V3P	GROUP SIGNAL	-	Three phase group signal for voltage inputs

Table 279: VMSQI Output signals

Name	Type	Description
3V0	REAL	3U0 Amplitude
3V0RANG	INTEGER	3V0 Magnitude range
3V0ANGL	REAL	3U0 Angle
V1	REAL	U1 Amplitude
Table continues on next page		

Name	Type	Description
V1RANG	INTEGER	V1 Magnitude range
V1ANGL	REAL	U1 Angle
V2	REAL	U2 Amplitude
V2RANG	INTEGER	V2 Magnitude range
V2ANGL	REAL	U2 Angle

13.1.6.4 Settings

Table 280: VMSQI Non group settings (basic)

Name	Values (Range)	Unit	Step	Default	Description
Operation	Disabled Enabled	-	-	Disabled	Disable/Enable Operation
3V0DbRepInt	1 - 300	Type	1	10	Cycl: Report interval (s), Db: In % of range, Int Db: In %s
3V0Min	0 - 2000000	V	1	0	Minimum value
3V0Max	0 - 2000000	V	1	318000	Maximum value
3V0RepTyp	Cyclic Dead band Int deadband	-	-	Dead band	Reporting type
3V0LimHys	0.000 - 100.000	%	0.001	5.000	Hysteresis value in % of range and is common for all limits
3V0AngDbRepInt	1 - 300	Type	1	10	Cycl: Report interval (s), Db: In % of range, Int Db: In %s
V1DbRepInt	1 - 300	Type	1	10	Cycl: Report interval (s), Db: In % of range, Int Db: In %s
V1Min	0 - 2000000	V	1	0	Minimum value
V1Max	0 - 2000000	V	1	106000	Maximum value
V1RepTyp	Cyclic Dead band Int deadband	-	-	Dead band	Reporting type
V1AngDbRepInt	1 - 300	Type	1	10	Cycl: Report interval (s), Db: In % of range, Int Db: In %s
V2DbRepInt	1 - 300	Type	1	10	Cycl: Report interval (s), Db: In % of range, Int Db: In %s
V2Min	0 - 2000000	V	1	0	Minimum value
V2Max	0 - 2000000	V	1	106000	Maximum value
V2RepTyp	Cyclic Dead band Int deadband	-	-	Dead band	Reporting type
V2LimHys	0.000 - 100.000	%	0.001	5.000	Hysteresis value in % of range and is common for all limits
V2AngDbRepInt	1 - 300	Type	1	10	Cycl: Report interval (s), Db: In % of range, Int Db: In %s

Table 281: VMSQI Non group settings (advanced)

Name	Values (Range)	Unit	Step	Default	Description
3V0ZeroDb	0 - 100000	m%	1	500	Zero point clamping
3V0HiHiLim	0 - 2000000	V	1	288000	High High limit (physical value)
3V0HiLim	0 - 2000000	V	1	258000	High limit (physical value)
3V0LowLim	0 - 2000000	V	1	213000	Low limit (physical value)
3V0LowLowLim	0 - 2000000	V	1	198000	Low Low limit (physical value)
V1ZeroDb	0 - 100000	m%	1	500	Zero point clamping
V1HiHiLim	0 - 2000000	V	1	96000	High High limit (physical value)
V1HiLim	0 - 2000000	V	1	86000	High limit (physical value)
V1LowLim	0 - 2000000	V	1	71000	Low limit (physical value)
V1LowLowLim	0 - 2000000	V	1	66000	Low Low limit (physical value)
V1LimHys	0.000 - 100.000	%	0.001	5.000	Hysteresis value in % of range and is common for all limits
V2ZeroDb	0 - 100000	m%	1	500	Zero point clamping
V2HiHiLim	0 - 2000000	V	1	96000	High High limit (physical value)
V2HiLim	0 - 2000000	V	1	86000	High limit (physical value)
V2LowLim	0 - 2000000	V	1	71000	Low limit (physical value)
V2LowLowLim	0 - 2000000	V	1	66000	Low Low limit (physical value)

13.1.6.5 Monitored data

Table 282: VMSQI Monitored data

Name	Type	Values (Range)	Unit	Description
3V0	REAL	-	kV	3U0 Amplitude
3V0ANGL	REAL	-	deg	3U0 Angle
V1	REAL	-	kV	U1 Amplitude
V1ANGL	REAL	-	deg	U1 Angle
V2	REAL	-	kV	U2 Amplitude
V2ANGL	REAL	-	deg	U2 Angle

13.1.7 Phase-neutral voltage measurement VNMMXU

13.1.7.1 Identification

Function description	IEC 61850 identification	IEC 60617 identification	ANSI/IEEE C37.2 device number
Phase-neutral voltage measurement	VNMMXU	*U*	-

13.1.7.2 Function block

The available function blocks of an IED are depending on the actual hardware (TRM) and the logic configuration made in PCM600.

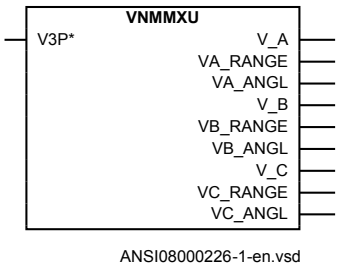

Figure 135: VNMMXU function block

13.1.7.3 Signals

Table 283: VNMMXU Input signals

Name	Type	Default	Description
V3P	GROUP SIGNAL	-	Three phase group signal for voltage inputs

Table 284: VNMMXU Output signals

Name	Type	Description
V_A	REAL	V_A Amplitude, magnitude of reported value
VA_RANGE	INTEGER	V_A Amplitude range
VA_ANGL	REAL	V_A Angle, magnitude of reported value
V_B	REAL	V_B Amplitude, magnitude of reported value

Table continues on next page

Name	Type	Description
VB_RANGE	INTEGER	V_B Amplitude range
VB_ANGL	REAL	V_B Angle, magnitude of reported value
V_C	REAL	V_C Amplitude, magnitude of reported value
VC_RANGE	INTEGER	V_C Amplitude range
VC_ANGL	REAL	VC Angle, magnitude of reported value

13.1.7.4 Settings

Table 285: VNMMXU Non group settings (basic)

Name	Values (Range)	Unit	Step	Default	Description
Operation	Disabled Enabled	-	-	Disabled	Disbled/Enabled operation
GlobalBaseSel	1 - 6	-	1	1	Selection of one of the Global Base Value groups
VDbRepInt	1 - 300	Type	1	10	Cycl: Report interval (s), Db: In % of range, Int Db: In %s
VMax	0 - 2000000	V	1	106000	Maximum value
VRepTyp	Cyclic Dead band Int deadband	-	-	Dead band	Reporting type
VLimHys	0.000 - 100.000	V	0.001	5.000	Hysteresis value in % of range and is common for all limits
VAngDbRepInt	1 - 300	Type	1	10	Cycl: Report interval (s), Db: In % of range, Int Db: In %s

Table 286: VNMMXU Non group settings (advanced)

Name	Values (Range)	Unit	Step	Default	Description
VZeroDb	0 - 100000	m%	1	500	Zero point clamping in 0.001% of range
VHiHiLim	0 - 2000000	V	1	96000	High High limit (physical value)
VHiLim	0 - 2000000	V	1	86000	High limit (physical value)
VLowLim	0 - 2000000	V	1	71000	Low limit (physical value)
VLowLowLim	0 - 2000000	V	1	66000	Low Low limit (physical value)
VMin	0 - 2000000	V	1	0	Minimum value

13.1.7.5 Monitored data

Table 287: VNMMXU Monitored data

Name	Type	Values (Range)	Unit	Description
V_A	REAL	-	kV	V_A Amplitude, magnitude of reported value
VA_ANGL	REAL	-	deg	V_A Angle, magnitude of reported value
V_B	REAL	-	kV	V_B Amplitude, magnitude of reported value
VB_ANGL	REAL	-	deg	V_B Angle, magnitude of reported value
V_C	REAL	-	kV	V_C Amplitude, magnitude of reported value
VC_ANGL	REAL	-	deg	VC Angle, magnitude of reported value

13.1.8 Operation principle

13.1.8.1 Measurement supervision

The protection, control, and monitoring IEDs have functionality to measure and further process information for currents and voltages obtained from the pre-processing blocks. The number of processed alternate measuring quantities depends on the type of IED and built-in options.

The information on measured quantities is available for the user at different locations:

- Locally by means of the local HMI
- Remotely using the monitoring tool within PCM600 or over the station bus
- Internally by connecting the analog output signals to the Disturbance Report function

Phase angle reference

All phase angles are presented in relation to a defined reference channel. The General setting parameter *PhaseAngleRef* defines the reference. The *PhaseAngleRef* is set in local HMI under: **Configuration/Analog modules/Reference** channel service values.

Zero point clamping

Measured value below zero point clamping limit is forced to zero. This allows the noise in the input signal to be ignored. The zero point clamping limit is a general setting (*XZeroDb* where X equals S, P, Q, PF, V, I, F, IA, IB, IC, VA, VB, VC, VAB, VBC, VCA, I1, I2, 3I0, V1, V2 or 3V0). Observe that this measurement supervision

zero point clamping might be overridden by the zero point clamping used for the measurement values within CVMMXN.

Continuous monitoring of the measured quantity

Users can continuously monitor the measured quantity available in each function block by means of four defined operating thresholds, see figure 136. The monitoring has two different modes of operating:

- Overfunction, when the measured current exceeds the High limit (*XHiLim*) or High-high limit (*XHiHiLim*) pre-set values
- Underfunction, when the measured current decreases under the Low limit (*XLowLim*) or Low-low limit (*XLowLowLim*) pre-set values.

X_RANGE is illustrated in figure 136.

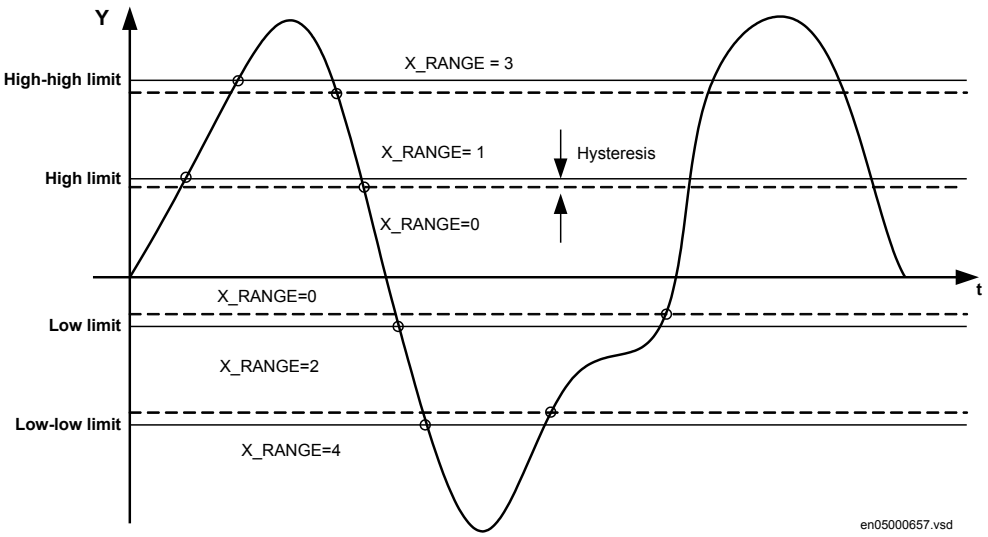

Figure 136: Presentation of operating limits

Each analog output has one corresponding supervision level output (X_RANGE). The output signal is an integer in the interval 0-4 (0: Normal, 1: High limit exceeded, 3: High-high limit exceeded, 2: below Low limit and 4: below Low-low limit). The output may be connected to a measurement expander block (XP (RANGE_XP)) to get measurement supervision as binary signals.

The logical value of the functional output signals changes according to figure 136.

The user can set the hysteresis (*XLimHyst*), which determines the difference between the operating and reset value at each operating point, in wide range for each measuring channel separately. The hysteresis is common for all operating values within one channel.

Actual value of the measured quantity

The actual value of the measured quantity is available locally and remotely. The measurement is continuous for each measured quantity separately, but the reporting of the value to the higher levels depends on the selected reporting mode. The following basic reporting modes are available:

- Cyclic reporting (*Cyclic*)
- Magnitude dead-band supervision (*Dead band*)
- Integral dead-band supervision (*Int deadband*)

Cyclic reporting

The cyclic reporting of measured value is performed according to chosen setting (*XRepTyp*). The measuring channel reports the value independent of magnitude or integral dead-band reporting.

In addition to the normal cyclic reporting the IED also report spontaneously when measured value passes any of the defined threshold limits.

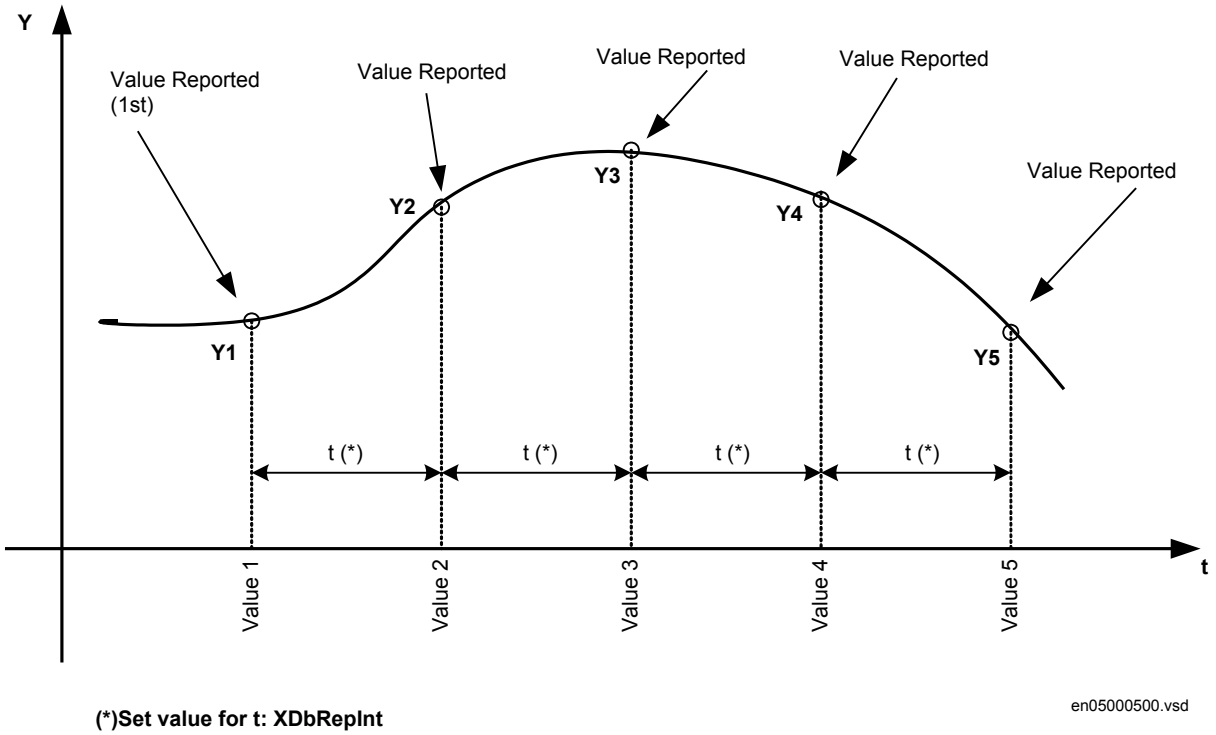

Figure 137: Periodic reporting

Magnitude dead-band supervision

If a measuring value is changed, compared to the last reported value, and the change is larger than the ±ΔY pre-defined limits that are set by user (*XZeroDb*), then the measuring channel reports the new value to a higher level, if this is detected by a new measured value. This limits the information flow to a minimum necessary. Figure 138 shows an example with the magnitude dead-band supervision. The picture is simplified: the process is not continuous but the values are evaluated with a time interval of one execution cycle from each other.

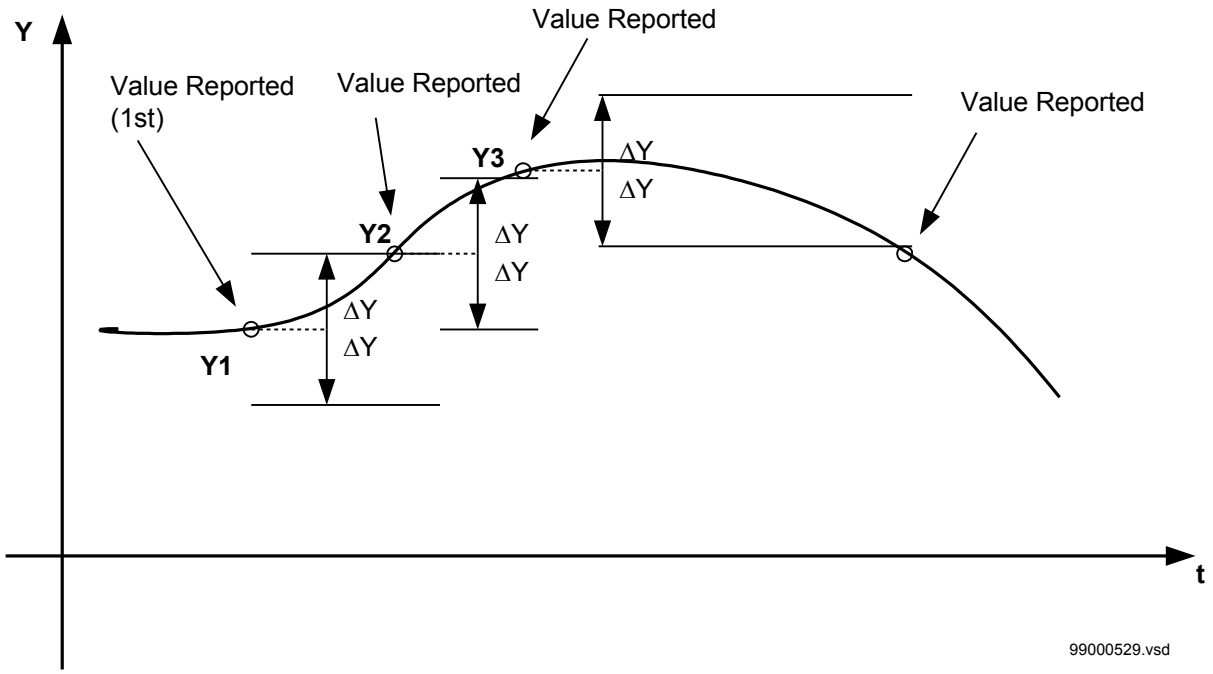

Figure 138: Magnitude dead-band supervision reporting

After the new value is reported, the ±ΔY limits for dead-band are automatically set around it. The new value is reported only if the measured quantity changes more than defined by the ±ΔY set limits.

Integral dead-band reporting

The measured value is reported if the time integral of all changes exceeds the pre-set limit (*XDbRepInt*), figure 139, where an example of reporting with integral dead-band supervision is shown. The picture is simplified: the process is not continuous but the values are evaluated with a time interval of one execution cycle from each other.

The last value reported, Y1 in figure 139 serves as a basic value for further measurement. A difference is calculated between the last reported and the newly measured value and is multiplied by the time increment (discrete integral). The

absolute values of these integral values are added until the pre-set value is exceeded. This occurs with the value Y2 that is reported and set as a new base for the following measurements (as well as for the values Y3, Y4 and Y5).

The integral dead-band supervision is particularly suitable for monitoring signals with small variations that can last for relatively long periods.

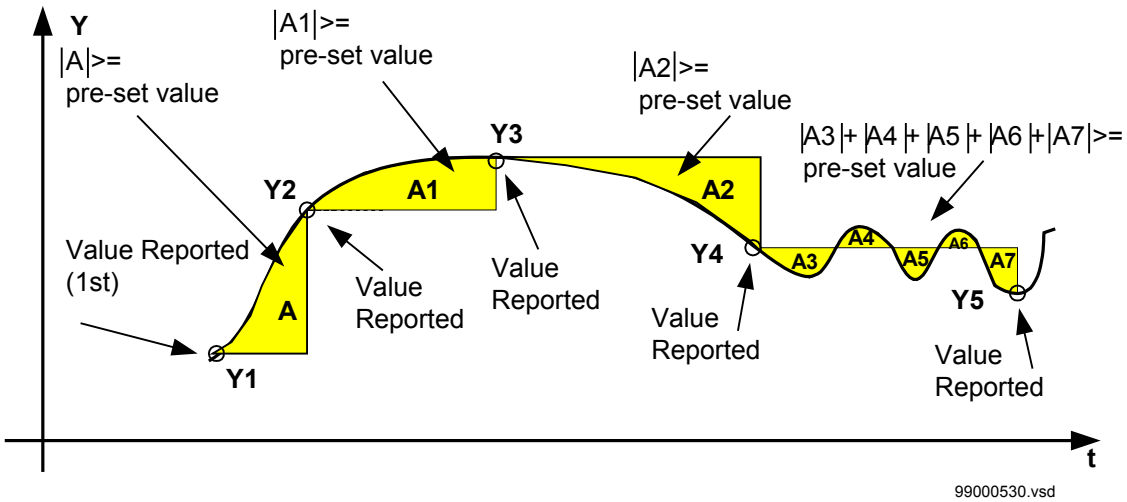

Figure 139: Reporting with integral dead-band supervision

13.1.8.2 Measurements CVMMXN

Mode of operation

The measurement function must be connected to three-phase current and three-phase voltage input in the configuration tool (group signals), but it is capable to measure and calculate above mentioned quantities in nine different ways depending on the available VT inputs connected to the IED. The end user can freely select by a parameter setting, which one of the nine available measuring modes shall be used within the function. Available options are summarized in the following table:

	Set value for parameter "Mode"	Formula used for complex, three-phase power calculation	Formula used for voltage and current magnitude calculation	Comment
1	A, B, C	$\overline{S} = \overline{V_A} \cdot \overline{I_A^*} + \overline{V_B} \cdot \overline{I_B^*} + \overline{V_C} \cdot \overline{I_C^*}$	$V = \left(\left\|\overline{V_A}\right\| + \left\|\overline{V_B}\right\| + \left\|\overline{V_C}\right\|\right) / \sqrt{3}$ $I = \left(\left\|\overline{I_A}\right\| + \left\|\overline{I_B}\right\| + \left\|\overline{I_C}\right\|\right) / 3$	Used when three phase-to-ground voltages are available
2	Arone	$\overline{S} = \overline{V_{AB}} \cdot \overline{I_A^*} - \overline{V_{BC}} \cdot \overline{I_C^*}$ (Equation 87)	$V = \left(\left\|\overline{V_{AB}}\right\| + \left\|\overline{V_{BC}}\right\|\right) / 2$ $I = \left(\left\|\overline{I_A}\right\| + \left\|\overline{I_C}\right\|\right) / 2$ (Equation 88)	Used when three two phase-to-phase voltages are available
3	PosSeq	$\overline{S} = 3 \cdot \overline{V_{PosSeq}} \cdot \overline{I_{PosSeq}^*}$ (Equation 89)	$V = \sqrt{3} \cdot \left\|\overline{V_{PosSeq}}\right\|$ $I = \left\|\overline{I_{PosSeq}}\right\|$ (Equation 90)	Used when only symmetrical three phase power shall be measured
4	AB	$\overline{S} = \overline{V_{AB}} \cdot \left(\overline{I_A^*} - \overline{I_B^*}\right)$ (Equation 91)	$V = \left\|\overline{V_{AB}}\right\|$ $I = \left(\left\|\overline{I_A}\right\| + \left\|\overline{I_B}\right\|\right) / 2$ (Equation 92)	Used when only V_{AB} phase-to-phase voltage is available
5	BC	$\overline{S} = \overline{V_{BC}} \cdot \left(\overline{I_B^*} - \overline{I_C^*}\right)$ (Equation 93)	$V = \left\|\overline{V_{BC}}\right\|$ $I = \left(\left\|\overline{I_B}\right\| + \left\|\overline{I_C}\right\|\right) / 2$ (Equation 94)	Used when only V_{BC} phase-to-phase voltage is available
6	CA	$\overline{S} = \overline{V_{CA}} \cdot \left(\overline{I_C^*} - \overline{I_A^*}\right)$ (Equation 95)	$V = \left\|\overline{V_{CA}}\right\|$ $I = \left(\left\|\overline{I_C}\right\| + \left\|\overline{I_A}\right\|\right) / 2$ (Equation 96)	Used when only V_{CA} phase-to-phase voltage is available
7	A	$\overline{S} = 3 \cdot \overline{V_A} \cdot \overline{I_A^*}$ (Equation 97)	$V = \sqrt{3} \cdot \left\|\overline{V_A}\right\|$ $I = \left\|\overline{I_A}\right\|$ (Equation 98)	Used when only V_A phase-to-ground voltage is available

Table continues on next page

	Set value for parameter "Mode"	Formula used for complex, three-phase power calculation	Formula used for voltage and current magnitude calculation	Comment
8	B	$\overline{S} = 3 \cdot \overline{V_B} \cdot \overline{I_B^*}$ (Equation 99)	$V = \sqrt{3} \cdot \left\|\overline{V_B}\right\|$ $I = \left\|\overline{I_B}\right\|$ (Equation 100)	Used when only V_B phase-to-ground voltage is available
9	C	$\overline{S} = 3 \cdot \overline{V_C} \cdot \overline{I_C^*}$ (Equation 101)	$V = \sqrt{3} \cdot \left\|\overline{V_C}\right\|$ $I = \left\|\overline{I_C}\right\|$ (Equation 102)	Used when only V_C phase-to-ground voltage is available
* means complex conjugated value				

It shall be noted that only in the first two operating modes that is, 1 & 2 the measurement function calculates exact three-phase power. In other operating modes that is, from 3 to 9 it calculates the three-phase power under assumption that the power system is fully symmetrical. Once the complex apparent power is calculated then the P, Q, S, & PF are calculated in accordance with the following formulas:

$$P = \mathrm{Re}(\overline{S})$$

(Equation 103)

$$Q = \mathrm{Im}(\overline{S})$$

(Equation 104)

$$S = \left|\overline{S}\right| = \sqrt{P^2 + Q^2}$$

(Equation 105)

$$PF = \cos\varphi = \frac{P}{S}$$

(Equation 106)

Additionally to the power factor value the two binary output signals from the function are provided which indicates the angular relationship between current and voltage phasors. Binary output signal ILAG is set to one when current phasor is lagging behind voltage phasor. Binary output signal ILEAD is set to one when current phasor is leading the voltage phasor.

Each analog output has a corresponding supervision level output (X_RANGE). The output signal is an integer in the interval 0-4, see section "Measurement supervision".

Calibration of analog inputs

Measured currents and voltages used in the CVMMXN function can be calibrated to get class 0.5 measuring accuracy. This is achieved by magnitude and angle compensation at 5, 30 and 100% of rated current and voltage. The compensation below 5% and above 100% is constant and linear in between, see example in figure 140.

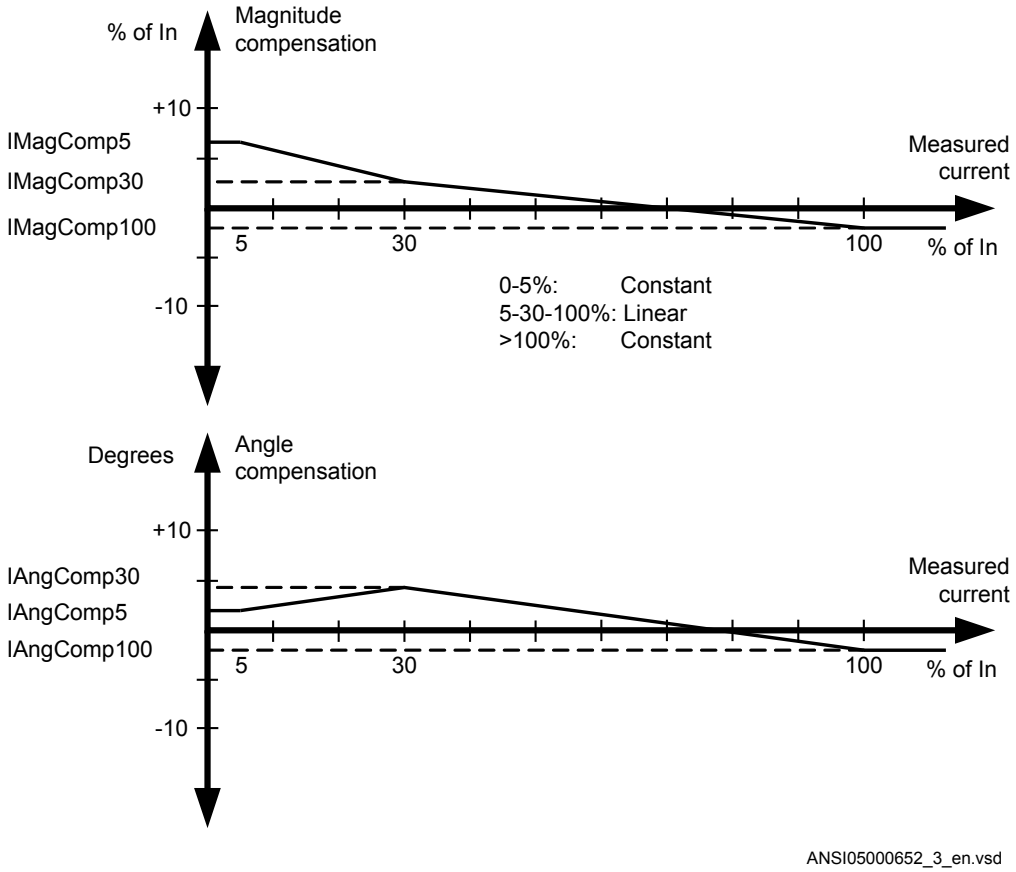

Figure 140: Calibration curves

The first current and voltage phase in the group signals will be used as reference and the magnitude and angle compensation will be used for related input signals.

Low pass filtering

In order to minimize the influence of the noise signal on the measurement it is possible to introduce the recursive, low pass filtering of the measured values for P, Q, S, V, I and power factor. This will make slower measurement response to the step changes in

the measured quantity. Filtering is performed in accordance with the following recursive formula:

$$X = k \cdot X_{Old} + (1 - k) \cdot X_{Calculated}$$

(Equation 107)

where:

X	is a new measured value (that is P, Q, S, V, I or PF) to be given out from the function
X_{Old}	is the measured value given from the measurement function in previous execution cycle
$X_{Calculated}$	is the new calculated value in the present execution cycle
k	is settable parameter by the end user which influence the filter properties

Default value for parameter *k* is 0.00. With this value the new calculated value is immediately given out without any filtering (that is, without any additional delay). When *k* is set to value bigger than 0, the filtering is enabled. Appropriate value of *k* shall be determined separately for every application. Some typical value for *k* =0.14.

Zero point clamping

In order to avoid erroneous measurements when either current or voltage signal is not present, the magnitude level for current and voltage measurement is forced to zero. When either current or voltage measurement is forced to zero automatically the measured values for power (P, Q & S) and power factor are forced to zero as well. Since the measurement supervision functionality, included in the CVMMXN function, is using these values the zero clamping will influence the subsequent supervision (observe the possibility to do zero point clamping within measurement supervision, see section "Measurement supervision").

Compensation facility

In order to compensate for small magnitude and angular errors in the complete measurement chain (CT error, VT error, IED input transformer errors and so on.) it is possible to perform on site calibration of the power measurement. This is achieved by setting the complex constant which is then internally used within the function to multiply the calculated complex apparent power S. This constant is set as magnitude (setting parameter *PowMagFact*, default value 1.000) and angle (setting parameter *PowAngComp*, default value 0.0 degrees). Default values for these two parameters are done in such way that they do not influence internally calculated value (complex constant has default value 1). In this way calibration, for specific operating range (for example, around rated power) can be done at site. However, to perform this calibration it is necessary to have an external power meter with high accuracy class available.

Directionality

CTStartPoint defines if the CTs grounding point is located towards or from the protected object under observation. If everything is properly set power is always measured towards protection object.

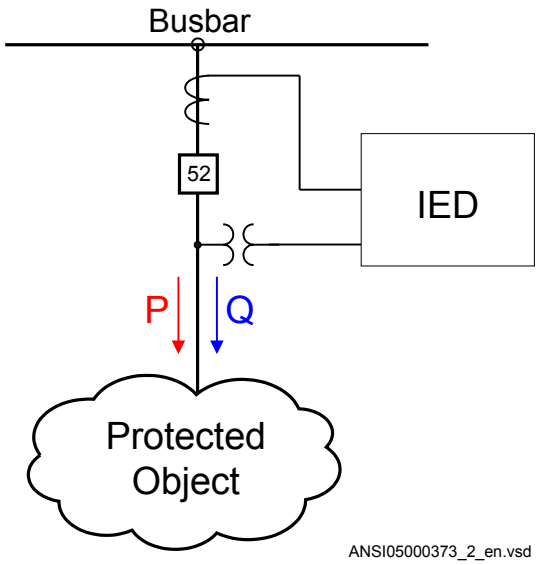

Figure 141: Internal IED directionality convention for P & Q measurements

Practically, it means that active and reactive power will have positive values when they flow from the busbar towards the protected object and they will have negative values when they flow from the protected object towards the busbar.

In some application, for example, when power is measured on the secondary side of the power transformer it might be desirable, from the end client point of view, to have actually opposite directional convention for active and reactive power measurements. This can be easily achieved by setting parameter *PowAngComp* to value of 180.0 degrees. With such setting the active and reactive power will have positive values when they flow from the protected object towards the busbar.

Frequency

Frequency is actually not calculated within measurement block. It is simply obtained from the pre-processing block and then just given out from the measurement block as an output.

13.1.8.3 Phase current measurement CMMXU

The Phase current measurement (CMMXU) function must be connected to three-phase current input in the configuration tool to be operable. Currents handled in the function can be calibrated to get better then class 0.5 measuring accuracy for internal use, on the

outputs and IEC 61850. This is achieved by magnitude and angle compensation at 5, 30 and 100% of rated current. The compensation below 5% and above 100% is constant and linear in between, see figure 140.

Phase currents (magnitude and angle) are available on the outputs and each magnitude output has a corresponding supervision level output (Ix_RANGE). The supervision output signal is an integer in the interval 0-4, see section "Measurement supervision".

13.1.8.4 Phase-phase and phase-neutral voltage measurements VMMXU, VNMMXU

The voltage function must be connected to three-phase voltage input in the configuration tool to be operable. Voltages are handled in the same way as currents when it comes to class 0.5 calibrations, see above.

The voltages (phase or phase-phase voltage, magnitude and angle) are available on the outputs and each magnitude output has a corresponding supervision level output (Vxy_RANG). The supervision output signal is an integer in the interval 0-4, see section "Measurement supervision".

13.1.8.5 Voltage and current sequence measurements VMSQI, CMSQI

The measurement functions must be connected to three-phase current (CMSQI) or voltage (VMSQI) input in the configuration tool to be operable. No outputs, other than X_RANG, are calculated within the measuring blocks and it is not possible to calibrate the signals. Input signals are obtained from the pre-processing block and transferred to corresponding output.

Positive, negative and three times zero sequence quantities are available on the outputs (voltage and current, magnitude and angle). Each magnitude output has a corresponding supervision level output (X_RANGE). The output signal is an integer in the interval 0-4, see section "Measurement supervision".

13.1.9 Technical data

Table 288: CVMMXN, CMMXU, VMMXU, CMSQI, VMSQI, VNMMXU

Function	Range or value	Accuracy
Voltage	(0.1-1.5) ×V_n	± 0.5% of V_n at V≤V_n ± 0.5% of V at V > V_n
Connected current	(0.2-4.0) × I_n	± 0.5% of I_n at I ≤ I_n ± 0.5% of I at I > I_n
Active power, P	0.1 x V_n< V < 1.5 x V_n 0.2 x I_n < I < 4.0 x I_n	± 1.0% of S_n at S ≤ S_n ± 1.0% of S at S > S_n
Table continues on next page		

Function	Range or value	Accuracy
Reactive power, Q	0.1 x V_n< V < 1.5 x V_n 0.2 x I_n < I < 4.0 x I_n	± 1.0% of S_n at S ≤ S_n ± 1.0% of S at S > S_n
Apparent power, S	0.1 x V_n < V < 1.5 x V_n 0.2 x I_n< I < 4.0 x I_n	± 1.0% of S_n at S ≤ S_n ± 1.0% of S at S > S_n
Apparent power, S Three phase settings	cos phi = 1	± 0.5% of S at S > S_n ± 0.5% of S_n at S ≤ S_n
Power factor, cos (φ)	0.1 x V_n < V < 1.5 x V_n 0.2 x I_n< I < 4.0 x I_n	< 0.02

13.2 Event Counter CNTGGIO

13.2.1 Identification

Function description	IEC 61850 identification	IEC 60617 identification	ANSI/IEEE C37.2 device number
Event counter	CNTGGIO	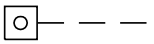	-

13.2.2 Functionality

Event counter (CNTGGIO) has six counters which are used for storing the number of times each counter input has been activated.

13.2.3 Function block

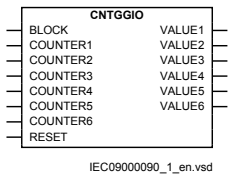

Figure 142: CNTGGIO function block

13.2.4 Signals

Table 289: CNTGGIO Input signals

Name	Type	Default	Description
BLOCK	BOOLEAN	0	Block of function
COUNTER1	BOOLEAN	0	Input for counter 1
COUNTER2	BOOLEAN	0	Input for counter 2
COUNTER3	BOOLEAN	0	Input for counter 3
COUNTER4	BOOLEAN	0	Input for counter 4
COUNTER5	BOOLEAN	0	Input for counter 5
COUNTER6	BOOLEAN	0	Input for counter 6
RESET	BOOLEAN	0	Reset of function

Table 290: CNTGGIO Output signals

Name	Type	Description
VALUE1	INTEGER	Output of counter 1
VALUE2	INTEGER	Output of counter 2
VALUE3	INTEGER	Output of counter 3
VALUE4	INTEGER	Output of counter 4
VALUE5	INTEGER	Output of counter 5
VALUE6	INTEGER	Output of counter 6

13.2.5 Settings

Table 291: CNTGGIO Group settings (basic)

Name	Values (Range)	Unit	Step	Default	Description
Operation	Disabled Enabled	-	-	Disabled	Disable/Enable Operation

13.2.6 Monitored data

Table 292: CNTGGIO Monitored data

Name	Type	Values (Range)	Unit	Description
VALUE1	INTEGER	-	-	Output of counter 1
VALUE2	INTEGER	-	-	Output of counter 2
VALUE3	INTEGER	-	-	Output of counter 3

Table continues on next page

Name	Type	Values (Range)	Unit	Description
VALUE4	INTEGER	-	-	Output of counter 4
VALUE5	INTEGER	-	-	Output of counter 5
VALUE6	INTEGER	-	-	Output of counter 6

13.2.7 Operation principle

Event counter (CNTGGIO) has six counter inputs. CNTGGIO stores how many times each of the inputs has been activated. The counter memory for each of the six inputs is updated, giving the total number of times the input has been activated, as soon as an input is activated. The maximum count up speed is 10 pulses per second. The maximum counter value is 10 000. For counts above 10 000 the counter will stop at 10 000 and no restart will take place.

To not risk that the flash memory is worn out due to too many writings, a mechanism for limiting the number of writings per time period is included in the product. This however gives as a result that it can take long time, up to several minutes, before a new value is stored in the flash memory. And if a new CNTGGIO value is not stored before auxiliary power interruption, it will be lost. CNTGGIO stored values in flash memory will however not be lost at an auxiliary power interruption.

The function block also has an input BLOCK. At activation of this input all six counters are blocked. The input can for example, be used for blocking the counters at testing.The function block has an input RESET. At activation of this input all six counters are set to 0.

All inputs are configured via PCM600.

13.2.7.1 Reporting

The content of the counters can be read in the local HMI.

Reset of counters can be performed in the local HMI and a binary input.

Reading of content can also be performed remotely, for example from a IEC 61850 client. The value can also be presented as a measuring value on the local HMI graphical display.

13.2.8 Technical data

Table 293: CNTGGIO technical data

Function	Range or value	Accuracy
Counter value	0-10000	-
Max. count up speed	10 pulses/s	-

13.3 Disturbance report

13.3.1 Functionality

Complete and reliable information about disturbances in the primary and/or in the secondary system together with continuous event-logging is accomplished by the disturbance report functionality.

Disturbance report DRPRDRE, always included in the IED, acquires sampled data of all selected analog input and binary signals connected to the function block with a, maximum of 40 analog and 96 binary signals.

The Disturbance report functionality is a common name for several functions:

- Sequential of events
- Indications
- Event recorder
- Trip value recorder
- Disturbance recorder

The Disturbance report function is characterized by great flexibility regarding configuration, initiating conditions, recording times, and large storage capacity.

A disturbance is defined as an activation of an input to the AxRADR or BxRBDR function blocks, which are set to trigger the disturbance recorder. All signals from start of pre-fault time to the end of post-fault time will be included in the recording.

Every disturbance report recording is saved in the IED in the standard Comtrade format. The same applies to all events, which are continuously saved in a FIFO-buffer. The local HMI is used to get information about the recordings. The disturbance report files may be uploaded to PCM600 for further analysis using the disturbance handling tool.

13.3.2 Disturbance report DRPRDRE

13.3.2.1 Identification

Function description	IEC 61850 identification	IEC 60617 identification	ANSI/IEEE C37.2 device number
Disturbance report	DRPRDRE	-	-

13.3.2.2 Function block

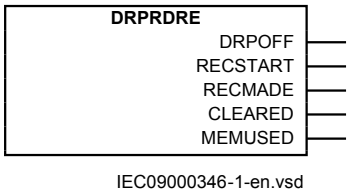

Figure 143: DRPRDRE function block

13.3.2.3 Signals

Table 294: DRPRDRE Output signals

Name	Type	Description
DRPOFF	BOOLEAN	Disturbance report function turned off
RECSTART	BOOLEAN	Disturbance recording started
RECMADE	BOOLEAN	Disturbance recording made
CLEARED	BOOLEAN	All disturbances in the disturbance report cleared
MEMUSED	BOOLEAN	More than 80% of memory used

13.3.2.4 Settings

Table 295: DRPRDRE Non group settings (basic)

Name	Values (Range)	Unit	Step	Default	Description
Operation	Disabled Enabled	-	-	Disabled	Operation Enable/Disable
PreFaultRecT	0.05 - 3.00	s	0.01	0.10	Pre-fault recording time
PostFaultRecT	0.1 - 10.0	s	0.1	0.5	Post-fault recording time
TimeLimit	0.5 - 8.0	s	0.1	1.0	Fault recording time limit
PostRetrig	Disabled Enabled	-	-	Disabled	Post-fault retrig enabled (On) or not (Off)
MaxNoStoreRec	10 - 100	-	1	100	Maximum number of stored disturbances
ZeroAngleRef	1 - 30	Ch	1	1	Trip value recorder, phasor reference channel
OpModeTest	Disabled Enabled	-	-	Disabled	Operation mode during test mode

13.3.2.5 Monitored data

Table 296: DRPRDRE Monitored data

Name	Type	Values (Range)	Unit	Description
MemoryUsed	INTEGER	-	%	Memory usage (0-100%)
UnTrigStatCh1	BOOLEAN	-	-	Under level trig for analog channel 1 activated
OvTrigStatCh1	BOOLEAN	-	-	Over level trig for analog channel 1 activated
UnTrigStatCh2	BOOLEAN	-	-	Under level trig for analog channel 2 activated
OvTrigStatCh2	BOOLEAN	-	-	Over level trig for analog channel 2 activated
UnTrigStatCh3	BOOLEAN	-	-	Under level trig for analog channel 3 activated
OvTrigStatCh3	BOOLEAN	-	-	Over level trig for analog channel 3 activated
UnTrigStatCh4	BOOLEAN	-	-	Under level trig for analog channel 4 activated
OvTrigStatCh4	BOOLEAN	-	-	Over level trig for analog channel 4 activated
UnTrigStatCh5	BOOLEAN	-	-	Under level trig for analog channel 5 activated
OvTrigStatCh5	BOOLEAN	-	-	Over level trig for analog channel 5 activated
UnTrigStatCh6	BOOLEAN	-	-	Under level trig for analog channel 6 activated
OvTrigStatCh6	BOOLEAN	-	-	Over level trig for analog channel 6 activated
UnTrigStatCh7	BOOLEAN	-	-	Under level trig for analog channel 7 activated
OvTrigStatCh7	BOOLEAN	-	-	Over level trig for analog channel 7 activated
UnTrigStatCh8	BOOLEAN	-	-	Under level trig for analog channel 8 activated
OvTrigStatCh8	BOOLEAN	-	-	Over level trig for analog channel 8 activated
UnTrigStatCh9	BOOLEAN	-	-	Under level trig for analog channel 9 activated
OvTrigStatCh9	BOOLEAN	-	-	Over level trig for analog channel 9 activated
UnTrigStatCh10	BOOLEAN	-	-	Under level trig for analog channel 10 activated
OvTrigStatCh10	BOOLEAN	-	-	Over level trig for analog channel 10 activated

Table continues on next page

Name	Type	Values (Range)	Unit	Description
UnTrigStatCh11	BOOLEAN	-	-	Under level trig for analog channel 11 activated
OvTrigStatCh11	BOOLEAN	-	-	Over level trig for analog channel 11 activated
UnTrigStatCh12	BOOLEAN	-	-	Under level trig for analog channel 12 activated
OvTrigStatCh12	BOOLEAN	-	-	Over level trig for analog channel 12 activated
UnTrigStatCh13	BOOLEAN	-	-	Under level trig for analog channel 13 activated
OvTrigStatCh13	BOOLEAN	-	-	Over level trig for analog channel 13 activated
UnTrigStatCh14	BOOLEAN	-	-	Under level trig for analog channel 14 activated
OvTrigStatCh14	BOOLEAN	-	-	Over level trig for analog channel 14 activated
UnTrigStatCh15	BOOLEAN	-	-	Under level trig for analog channel 15 activated
OvTrigStatCh15	BOOLEAN	-	-	Over level trig for analog channel 15 activated
UnTrigStatCh16	BOOLEAN	-	-	Under level trig for analog channel 16 activated
OvTrigStatCh16	BOOLEAN	-	-	Over level trig for analog channel 16 activated
UnTrigStatCh17	BOOLEAN	-	-	Under level trig for analog channel 17 activated
OvTrigStatCh17	BOOLEAN	-	-	Over level trig for analog channel 17 activated
UnTrigStatCh18	BOOLEAN	-	-	Under level trig for analog channel 18 activated
OvTrigStatCh18	BOOLEAN	-	-	Over level trig for analog channel 18 activated
UnTrigStatCh19	BOOLEAN	-	-	Under level trig for analog channel 19 activated
OvTrigStatCh19	BOOLEAN	-	-	Over level trig for analog channel 19 activated
UnTrigStatCh20	BOOLEAN	-	-	Under level trig for analog channel 20 activated
OvTrigStatCh20	BOOLEAN	-	-	Over level trig for analog channel 20 activated
UnTrigStatCh21	BOOLEAN	-	-	Under level trig for analog channel 21 activated
OvTrigStatCh21	BOOLEAN	-	-	Over level trig for analog channel 21 activated

Table continues on next page

Name	Type	Values (Range)	Unit	Description
UnTrigStatCh22	BOOLEAN	-	-	Under level trig for analog channel 22 activated
OvTrigStatCh22	BOOLEAN	-	-	Over level trig for analog channel 22 activated
UnTrigStatCh23	BOOLEAN	-	-	Under level trig for analog channel 23 activated
OvTrigStatCh23	BOOLEAN	-	-	Over level trig for analog channel 23 activated
UnTrigStatCh24	BOOLEAN	-	-	Under level trig for analog channel 24 activated
OvTrigStatCh24	BOOLEAN	-	-	Over level trig for analog channel 24 activated
UnTrigStatCh25	BOOLEAN	-	-	Under level trig for analog channel 25 activated
OvTrigStatCh25	BOOLEAN	-	-	Over level trig for analog channel 25 activated
UnTrigStatCh26	BOOLEAN	-	-	Under level trig for analog channel 26 activated
OvTrigStatCh26	BOOLEAN	-	-	Over level trig for analog channel 26 activated
UnTrigStatCh27	BOOLEAN	-	-	Under level trig for analog channel 27 activated
OvTrigStatCh27	BOOLEAN	-	-	Over level trig for analog channel 27 activated
UnTrigStatCh28	BOOLEAN	-	-	Under level trig for analog channel 28 activated
OvTrigStatCh28	BOOLEAN	-	-	Over level trig for analog channel 28 activated
UnTrigStatCh29	BOOLEAN	-	-	Under level trig for analog channel 29 activated
OvTrigStatCh29	BOOLEAN	-	-	Over level trig for analog channel 29 activated
UnTrigStatCh30	BOOLEAN	-	-	Under level trig for analog channel 30 activated
OvTrigStatCh30	BOOLEAN	-	-	Over level trig for analog channel 30 activated
UnTrigStatCh31	BOOLEAN	-	-	Under level trig for analog channel 31 activated
OvTrigStatCh31	BOOLEAN	-	-	Over level trig for analog channel 31 activated
UnTrigStatCh32	BOOLEAN	-	-	Under level trig for analog channel 32 activated
OvTrigStatCh32	BOOLEAN	-	-	Over level trig for analog channel 32 activated

Table continues on next page

Name	Type	Values (Range)	Unit	Description
UnTrigStatCh33	BOOLEAN	-	-	Under level trig for analog channel 33 activated
OvTrigStatCh33	BOOLEAN	-	-	Over level trig for analog channel 33 activated
UnTrigStatCh34	BOOLEAN	-	-	Under level trig for analog channel 34 activated
OvTrigStatCh34	BOOLEAN	-	-	Over level trig for analog channel 34 activated
UnTrigStatCh35	BOOLEAN	-	-	Under level trig for analog channel 35 activated
OvTrigStatCh35	BOOLEAN	-	-	Over level trig for analog channel 35 activated
UnTrigStatCh36	BOOLEAN	-	-	Under level trig for analog channel 36 activated
OvTrigStatCh36	BOOLEAN	-	-	Over level trig for analog channel 36 activated
UnTrigStatCh37	BOOLEAN	-	-	Under level trig for analog channel 37 activated
OvTrigStatCh37	BOOLEAN	-	-	Over level trig for analog channel 37 activated
UnTrigStatCh38	BOOLEAN	-	-	Under level trig for analog channel 38 activated
OvTrigStatCh38	BOOLEAN	-	-	Over level trig for analog channel 38 activated
UnTrigStatCh39	BOOLEAN	-	-	Under level trig for analog channel 39 activated
OvTrigStatCh39	BOOLEAN	-	-	Over level trig for analog channel 39 activated
UnTrigStatCh40	BOOLEAN	-	-	Under level trig for analog channel 40 activated
OvTrigStatCh40	BOOLEAN	-	-	Over level trig for analog channel 40 activated
FaultNumber	INTEGER	-	-	Disturbance fault number

13.3.2.6 Measured values

Table 297: DRPRDRE Measured values

Name	Type	Default	Description
ManTrig	BOOLEAN	0	Manual trig of disturbance report
ClearDist	BOOLEAN	0	Clear all disturbances
ClearProcessEv	BOOLEAN	0	Clear all process events

13.3.3 Analog input signals AxRADR

13.3.3.1 Identification

Function description	IEC 61850 identification	IEC 60617 identification	ANSI/IEEE C37.2 device number
Analog input signals	A1RADR	-	-
Analog input signals	A2RADR	-	-
Analog input signals	A3RADR	-	-

13.3.3.2 Function block

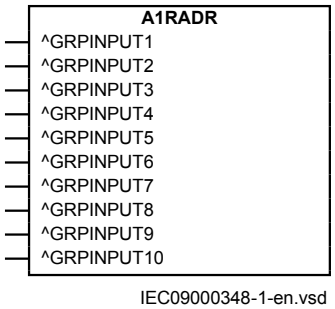

Figure 144: A1RADR function block, analog inputs, example for A1RADR, A2RADR and A3RADR

13.3.3.3 Signals

A1RADR - A3RADR Input signals

Tables for input signals for A1RADR, A2RADR and A3RADR are similar except for GRPINPUT number.

- A1RADR, GRPINPUT1 - GRPINPUT10
- A2RADR, GRPINPUT11 - GRPINPUT20
- A3RADR, GRPINPUT21 - GRPINPUT30

Table 298: A1RADR Input signals

Name	Type	Default	Description
GRPINPUT1	GROUP SIGNAL	-	Group signal for input 1
GRPINPUT2	GROUP SIGNAL	-	Group signal for input 2
GRPINPUT3	GROUP SIGNAL	-	Group signal for input 3
GRPINPUT4	GROUP SIGNAL	-	Group signal for input 4
GRPINPUT5	GROUP SIGNAL	-	Group signal for input 5
GRPINPUT6	GROUP SIGNAL	-	Group signal for input 6
GRPINPUT7	GROUP SIGNAL	-	Group signal for input 7
GRPINPUT8	GROUP SIGNAL	-	Group signal for input 8
GRPINPUT9	GROUP SIGNAL	-	Group signal for input 9
GRPINPUT10	GROUP SIGNAL	-	Group signal for input 10

13.3.3.4 Settings

A1RADR - A3RADR Settings

Setting tables for A1RADR, A2RADR and A3RADR are similar except for channel numbers.

- A1RADR, channel01 - channel10
- A2RADR, channel11 - channel20
- A3RADR, channel21 - channel30

Table 299: A1RADR Non group settings (basic)

Name	Values (Range)	Unit	Step	Default	Description
Operation01	Disabled Enabled	-	-	Disabled	Operation On/Off
Operation02	Disabled Enabled	-	-	Disabled	Operation On/Off
Operation03	Disabled Enabled	-	-	Disabled	Operation On/Off
Operation04	Disabled Enabled	-	-	Disabled	Operation On/Off

Table continues on next page

Name	Values (Range)	Unit	Step	Default	Description
Operation05	Disabled Enabled	-	-	Disabled	Operation On/Off
Operation06	Disabled Enabled	-	-	Disabled	Operation On/Off
Operation07	Disabled Enabled	-	-	Disabled	Operation On/Off
Operation08	Disabled Enabled	-	-	Disabled	Operation On/Off
Operation09	Disabled Enabled	-	-	Disabled	Operation On/Off
Operation10	Disabled Enabled	-	-	Disabled	Operation On/Off
FunType1	0 - 255	-	1	0	Function type for analog channel 1 (IEC-60870-5-103)
InfNo1	0 - 255	-	1	0	Information number for analog channel 1 (IEC-60870-5-103)
FunType2	0 - 255	-	1	0	Function type for analog channel 2 (IEC-60870-5-103)
InfNo2	0 - 255	-	1	0	Information number for analog channel 2 (IEC-60870-5-103)
FunType3	0 - 255	-	1	0	Function type for analog channel 3 (IEC-60870-5-103)
InfNo3	0 - 255	-	1	0	Information number for analog channel 3 (IEC-60870-5-103)
FunType4	0 - 255	-	1	0	Function type for analog channel 4 (IEC-60870-5-103)
InfNo4	0 - 255	-	1	0	Information number for analog channel 4 (IEC-60870-5-103)
FunType5	0 - 255	-	1	0	Function type for analog channel 5 (IEC-60870-5-103)
InfNo5	0 - 255	-	1	0	Information number for analog channel 5 (IEC-60870-5-103)
FunType6	0 - 255	-	1	0	Function type for analog channel 6 (IEC-60870-5-103)
InfNo6	0 - 255	-	1	0	Information number for analog channel 6 (IEC-60870-5-103)
FunType7	0 - 255	-	1	0	Function type for analog channel 7 (IEC-60870-5-103)
InfNo7	0 - 255	-	1	0	Information number for analog channel 7 (IEC-60870-5-103)
FunType8	0 - 255	-	1	0	Function type for analog channel 8 (IEC-60870-5-103)
InfNo8	0 - 255	-	1	0	Information number for analog channel 8 (IEC-60870-5-103)

Table continues on next page

Name	Values (Range)	Unit	Step	Default	Description
FunType9	0 - 255	-	1	0	Function type for analog channel 9 (IEC-60870-5-103)
InfNo9	0 - 255	-	1	0	Information number for analog channel 9 (IEC-60870-5-103)
FunType10	0 - 255	-	1	0	Function type for analog channel 10 (IEC-60870-5-103)
InfNo10	0 - 255	-	1	0	Information number for analog channel10 (IEC-60870-5-103)

Table 300: A1RADR Non group settings (advanced)

Name	Values (Range)	Unit	Step	Default	Description
NomValue01	0.0 - 999999.9	-	0.1	0.0	Nominal value for analog channel 1
UnderTrigOp01	Disabled Enabled	-	-	Disabled	Use under level trigger for analog channel 1 (on) or not (off)
UnderTrigLe01	0 - 200	%	1	50	Under trigger level for analog channel 1 in % of signal
OverTrigOp01	Disabled Enabled	-	-	Disabled	Use over level trigger for analog channel 1 (on) or not (off)
OverTrigLe01	0 - 5000	%	1	200	Over trigger level for analog channel 1 in % of signal
NomValue02	0.0 - 999999.9	-	0.1	0.0	Nominal value for analog channel 2
UnderTrigOp02	Disabled Enabled	-	-	Disabled	Use under level trigger for analog channel 2 (on) or not (off)
UnderTrigLe02	0 - 200	%	1	50	Under trigger level for analog channel 2 in % of signal
OverTrigOp02	Disabled Enabled	-	-	Disabled	Use over level trigger for analog channel 2 (on) or not (off)
OverTrigLe02	0 - 5000	%	1	200	Over trigger level for analog channel 2 in % of signal
NomValue03	0.0 - 999999.9	-	0.1	0.0	Nominal value for analog channel 3
UnderTrigOp03	Disabled Enabled	-	-	Disabled	Use under level trigger for analog channel 3 (on) or not (off)
UnderTrigLe03	0 - 200	%	1	50	Under trigger level for analog channel 3 in % of signal
OverTrigOp03	Disabled Enabled	-	-	Disabled	Use over level trigger for analog channel 3 (on) or not (off)
OverTrigLe03	0 - 5000	%	1	200	Overtrigger level for analog channel 3 in % of signal
NomValue04	0.0 - 999999.9	-	0.1	0.0	Nominal value for analog channel 4
UnderTrigOp04	Disabled Enabled	-	-	Disabled	Use under level trigger for analog channel 4 (on) or not (off)
UnderTrigLe04	0 - 200	%	1	50	Under trigger level for analog channel 4 in % of signal

Table continues on next page

Name	Values (Range)	Unit	Step	Default	Description
OverTrigOp04	Disabled Enabled	-	-	Disabled	Use over level trigger for analog channel 4 (on) or not (off)
OverTrigLe04	0 - 5000	%	1	200	Over trigger level for analog channel 4 in % of signal
NomValue05	0.0 - 999999.9	-	0.1	0.0	Nominal value for analog channel 5
UnderTrigOp05	Disabled Enabled	-	-	Disabled	Use under level trigger for analog channel 5 (on) or not (off)
UnderTrigLe05	0 - 200	%	1	50	Under trigger level for analog channel 5 in % of signal
OverTrigOp05	Disabled Enabled	-	-	Disabled	Use over level trigger for analog channel 5 (on) or not (off)
OverTrigLe05	0 - 5000	%	1	200	Over trigger level for analog channel 5 in % of signal
NomValue06	0.0 - 999999.9	-	0.1	0.0	Nominal value for analog channel 6
UnderTrigOp06	Disabled Enabled	-	-	Disabled	Use under level trigger for analog channel 6 (on) or not (off)
UnderTrigLe06	0 - 200	%	1	50	Under trigger level for analog channel 6 in % of signal
OverTrigOp06	Disabled Enabled	-	-	Disabled	Use over level trigger for analog channel 6 (on) or not (off)
OverTrigLe06	0 - 5000	%	1	200	Over trigger level for analog channel 6 in % of signal
NomValue07	0.0 - 999999.9	-	0.1	0.0	Nominal value for analog channel 7
UnderTrigOp07	Disabled Enabled	-	-	Disabled	Use under level trigger for analog channel 7 (on) or not (off)
UnderTrigLe07	0 - 200	%	1	50	Under trigger level for analog channel 7 in % of signal
OverTrigOp07	Disabled Enabled	-	-	Disabled	Use over level trigger for analog channel 7 (on) or not (off)
OverTrigLe07	0 - 5000	%	1	200	Over trigger level for analog channel 7 in % of signal
NomValue08	0.0 - 999999.9	-	0.1	0.0	Nominal value for analog channel 8
UnderTrigOp08	Disabled Enabled	-	-	Disabled	Use under level trigger for analog channel 8 (on) or not (off)
UnderTrigLe08	0 - 200	%	1	50	Under trigger level for analog channel 8 in % of signal
OverTrigOp08	Disabled Enabled	-	-	Disabled	Use over level trigger for analog channel 8 (on) or not (off)
OverTrigLe08	0 - 5000	%	1	200	Over trigger level for analog channel 8 in % of signal
NomValue09	0.0 - 999999.9	-	0.1	0.0	Nominal value for analog channel 9
UnderTrigOp09	Disabled Enabled	-	-	Disabled	Use under level trigger for analog channel 9 (on) or not (off)

Table continues on next page

Name	Values (Range)	Unit	Step	Default	Description
UnderTrigLe09	0 - 200	%	1	50	Under trigger level for analog channel 9 in % of signal
OverTrigOp09	Disabled Enabled	-	-	Disabled	Use over level trigger for analog channel 9 (on) or not (off)
OverTrigLe09	0 - 5000	%	1	200	Over trigger level for analog channel 9 in % of signal
NomValue10	0.0 - 999999.9	-	0.1	0.0	Nominal value for analog channel 10
UnderTrigOp10	Disabled Enabled	-	-	Disabled	Use under level trigger for analog channel 10 (on) or not (off)
UnderTrigLe10	0 - 200	%	1	50	Under trigger level for analog channel 10 in % of signal
OverTrigOp10	Disabled Enabled	-	-	Disabled	Use over level trigger for analog channel 10 (on) or not (off)
OverTrigLe10	0 - 5000	%	1	200	Over trigger level for analog channel 10 in % of signal

13.3.4 Analog input signals A4RADR

13.3.4.1 Identification

Function description	IEC 61850 identification	IEC 60617 identification	ANSI/IEEE C37.2 device number
Analog input signals	A4RADR	-	-

13.3.4.2 Function block

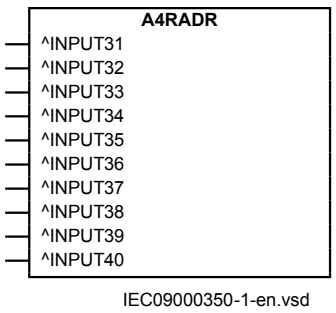

Figure 145: A4RADR function block, derived analog inputs

Channels 31-40 are not shown in LHMI. They are used for internally calculated analog signals.

13.3.4.3 Signals

Table 301: A4RADR Input signals

Name	Type	Default	Description
INPUT31	REAL	0	Analog channel 31
INPUT32	REAL	0	Analog channel 32
INPUT33	REAL	0	Analog channel 33
INPUT34	REAL	0	Analog channel 34
INPUT35	REAL	0	Analog channel 35
INPUT36	REAL	0	Analog channel 36
INPUT37	REAL	0	Analog channel 37
INPUT38	REAL	0	Analog channel 38
INPUT39	REAL	0	Analog channel 39
INPUT40	REAL	0	Analog channel 40

13.3.4.4 Settings

Table 302: A4RADR Non group settings (basic)

Name	Values (Range)	Unit	Step	Default	Description
Operation31	Disabled Enabled	-	-	Disabled	Operation On/off
Operation32	Disabled Enabled	-	-	Disabled	Operation On/off
Operation33	Disabled Enabled	-	-	Disabled	Operation On/off
Operation34	Disabled Enabled	-	-	Disabled	Operation On/off
Operation35	Disabled Enabled	-	-	Disabled	Operation On/off
Operation36	Disabled Enabled	-	-	Disabled	Operation On/off
Operation37	Disabled Enabled	-	-	Disabled	Operation On/off
Operation38	Disabled Enabled	-	-	Disabled	Operation On/off
Operation39	Disabled Enabled	-	-	Disabled	Operation On/off
Operation40	Disabled Enabled	-	-	Disabled	Operation On/off
FunType31	0 - 255	-	1	0	Function type for analog channel 31 (IEC-60870-5-103)

Table continues on next page

Name	Values (Range)	Unit	Step	Default	Description
InfNo31	0 - 255	-	1	0	Information number for analog channel 31 (IEC-60870-5-103)
FunType32	0 - 255	-	1	0	Function type for analog channel 32 (IEC-60870-5-103)
InfNo32	0 - 255	-	1	0	Information number for analog channel 32 (IEC-60870-5-103)
FunType33	0 - 255	-	1	0	Function type for analog channel 33 (IEC-60870-5-103)
InfNo33	0 - 255	-	1	0	Information number for analog channel 33 (IEC-60870-5-103)
FunType34	0 - 255	-	1	0	Function type for analog channel 34 (IEC-60870-5-103)
InfNo34	0 - 255	-	1	0	Information number for analog channel 34 (IEC-60870-5-103)
FunType35	0 - 255	-	1	0	Function type for analog channel 35 (IEC-60870-5-103)
InfNo35	0 - 255	-	1	0	Information number for analog channel 35 (IEC-60870-5-103)
FunType36	0 - 255	-	1	0	Function type for analog channel 36 (IEC-60870-5-103)
InfNo36	0 - 255	-	1	0	Information number for analog channel 36 (IEC-60870-5-103)
FunType37	0 - 255	-	1	0	Function type for analog channel 37 (IEC-60870-5-103)
InfNo37	0 - 255	-	1	0	Information number for analog channel 37 (IEC-60870-5-103)
FunType38	0 - 255	-	1	0	Function type for analog channel 38 (IEC-60870-5-103)
InfNo38	0 - 255	-	1	0	Information number for analog channel 38 (IEC-60870-5-103)
FunType39	0 - 255	-	1	0	Function type for analog channel 39 (IEC-60870-5-103)
InfNo39	0 - 255	-	1	0	Information number for analog channel 39 (IEC-60870-5-103)
FunType40	0 - 255	-	1	0	Function type for analog channel 40 (IEC-60870-5-103)
InfNo40	0 - 255	-	1	0	Information number for analog channel40 (IEC-60870-5-103)

Table 303: A4RADR Non group settings (advanced)

Name	Values (Range)	Unit	Step	Default	Description
NomValue31	0.0 - 999999.9	-	0.1	0.0	Nominal value for analog channel 31
UnderTrigOp31	Disabled Enabled	-	-	Disabled	Use under level trigger for analog channel 31 (on) or not (off)
UnderTrigLe31	0 - 200	%	1	50	Under trigger level for analog channel 31 in % of signal
OverTrigOp31	Disabled Enabled	-	-	Disabled	Use over level trigger for analog channel 31 (on) or not (off)
OverTrigLe31	0 - 5000	%	1	200	Over trigger level for analog channel 31 in % of signal
NomValue32	0.0 - 999999.9	-	0.1	0.0	Nominal value for analog channel 32
UnderTrigOp32	Disabled Enabled	-	-	Disabled	Use under level trigger for analog channel 32 (on) or not (off)
UnderTrigLe32	0 - 200	%	1	50	Under trigger level for analog channel 32 in % of signal
OverTrigOp32	Disabled Enabled	-	-	Disabled	Use over level trigger for analog channel 32 (on) or not (off)
OverTrigLe32	0 - 5000	%	1	200	Over trigger level for analog channel 32 in % of signal
NomValue33	0.0 - 999999.9	-	0.1	0.0	Nominal value for analog channel 33
UnderTrigOp33	Disabled Enabled	-	-	Disabled	Use under level trigger for analog channel 33 (on) or not (off)
UnderTrigLe33	0 - 200	%	1	50	Under trigger level for analog channel 33 in % of signal
OverTrigOp33	Disabled Enabled	-	-	Disabled	Use over level trigger for analog channel 33 (on) or not (off)
OverTrigLe33	0 - 5000	%	1	200	Overtrigger level for analog channel 33 in % of signal
NomValue34	0.0 - 999999.9	-	0.1	0.0	Nominal value for analog channel 34
UnderTrigOp34	Disabled Enabled	-	-	Disabled	Use under level trigger for analog channel 34 (on) or not (off)
UnderTrigLe34	0 - 200	%	1	50	Under trigger level for analog channel 34 in % of signal
OverTrigOp34	Disabled Enabled	-	-	Disabled	Use over level trigger for analog channel 34 (on) or not (off)
OverTrigLe34	0 - 5000	%	1	200	Over trigger level for analog channel 34 in % of signal
NomValue35	0.0 - 999999.9	-	0.1	0.0	Nominal value for analog channel 35
UnderTrigOp35	Disabled Enabled	-	-	Disabled	Use under level trigger for analog channel 35 (on) or not (off)
UnderTrigLe35	0 - 200	%	1	50	Under trigger level for analog channel 35 in % of signal

Table continues on next page

Name	Values (Range)	Unit	Step	Default	Description
OverTrigOp35	Disabled Enabled	-	-	Disabled	Use over level trigger for analog channel 35 (on) or not (off)
OverTrigLe35	0 - 5000	%	1	200	Over trigger level for analog channel 35 in % of signal
NomValue36	0.0 - 999999.9	-	0.1	0.0	Nominal value for analog channel 36
UnderTrigOp36	Disabled Enabled	-	-	Disabled	Use under level trigger for analog channel 36 (on) or not (off)
UnderTrigLe36	0 - 200	%	1	50	Under trigger level for analog channel 36 in % of signal
OverTrigOp36	Disabled Enabled	-	-	Disabled	Use over level trigger for analog channel 36 (on) or not (off)
OverTrigLe36	0 - 5000	%	1	200	Over trigger level for analog channel 36 in % of signal
NomValue37	0.0 - 999999.9	-	0.1	0.0	Nominal value for analog channel 37
UnderTrigOp37	Disabled Enabled	-	-	Disabled	Use under level trigger for analog channel 37 (on) or not (off)
UnderTrigLe37	0 - 200	%	1	50	Under trigger level for analog channel 37 in % of signal
OverTrigOp37	Disabled Enabled	-	-	Disabled	Use over level trigger for analog channel 37 (on) or not (off)
OverTrigLe37	0 - 5000	%	1	200	Over trigger level for analog channel 37 in % of signal
NomValue38	0.0 - 999999.9	-	0.1	0.0	Nominal value for analog channel 38
UnderTrigOp38	Disabled Enabled	-	-	Disabled	Use under level trigger for analog channel 38 (on) or not (off)
UnderTrigLe38	0 - 200	%	1	50	Under trigger level for analog channel 38 in % of signal
OverTrigOp38	Disabled Enabled	-	-	Disabled	Use over level trigger for analog channel 38 (on) or not (off)
OverTrigLe38	0 - 5000	%	1	200	Over trigger level for analog channel 38 in % of signal
NomValue39	0.0 - 999999.9	-	0.1	0.0	Nominal value for analog channel 39
UnderTrigOp39	Disabled Enabled	-	-	Disabled	Use under level trigger for analog channel 39 (on) or not (off)
UnderTrigLe39	0 - 200	%	1	50	Under trigger level for analog channel 39 in % of signal
OverTrigOp39	Disabled Enabled	-	-	Disabled	Use over level trigger for analog channel 39 (on) or not (off)
OverTrigLe39	0 - 5000	%	1	200	Over trigger level for analog channel 39 in % of signal
NomValue40	0.0 - 999999.9	-	0.1	0.0	Nominal value for analog channel 40
UnderTrigOp40	Disabled Enabled	-	-	Disabled	Use under level trigger for analog channel 40 (on) or not (off)

Table continues on next page

Name	Values (Range)	Unit	Step	Default	Description
UnderTrigLe40	0 - 200	%	1	50	Under trigger level for analog channel 40 in % of signal
OverTrigOp40	Disabled Enabled	-	-	Disabled	Use over level trigger for analog channel 40 (on) or not (off)
OverTrigLe40	0 - 5000	%	1	200	Over trigger level for analog channel 40 in % of signal

13.3.5 Binary input signals BxRBDR

13.3.5.1 Identification

Function description	IEC 61850 identification	IEC 60617 identification	ANSI/IEEE C37.2 device number
Binary input signals	B1RBDR	-	-
Binary input signals	B2RBDR	-	-
Binary input signals	B3RBDR	-	-
Binary input signals	B4RBDR	-	-
Binary input signals	B5RBDR	-	-
Binary input signals	B6RBDR	-	-

13.3.5.2 Function block

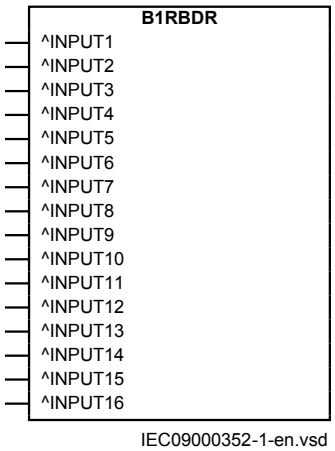

Figure 146: B1RBDR function block, binary inputs, example for B1RBDR - B6RBDR

13.3.5.3 Signals

B1RBDR - B6RBDR Input signals

Tables for input signals for B1RBDR - B6RBDR are all similar except for INPUT and description number.

- B1RBDR, INPUT1 - INPUT16
- B2RBDR, INPUT17 - INPUT32
- B3RBDR, INPUT33 - INPUT48
- B4RBDR, INPUT49 - INPUT64
- B5RBDR, INPUT65 - INPUT80
- B6RBDR, INPUT81 - INPUT96

Table 304: B1RBDR Input signals

Name	Type	Default	Description
INPUT1	BOOLEAN	0	Binary channel 1
INPUT2	BOOLEAN	0	Binary channel 2
INPUT3	BOOLEAN	0	Binary channel 3
INPUT4	BOOLEAN	0	Binary channel 4
INPUT5	BOOLEAN	0	Binary channel 5
INPUT6	BOOLEAN	0	Binary channel 6
INPUT7	BOOLEAN	0	Binary channel 7
INPUT8	BOOLEAN	0	Binary channel 8
INPUT9	BOOLEAN	0	Binary channel 9
INPUT10	BOOLEAN	0	Binary channel 10
INPUT11	BOOLEAN	0	Binary channel 11
INPUT12	BOOLEAN	0	Binary channel 12
INPUT13	BOOLEAN	0	Binary channel 13
INPUT14	BOOLEAN	0	Binary channel 14
INPUT15	BOOLEAN	0	Binary channel 15
INPUT16	BOOLEAN	0	Binary channel 16

13.3.5.4 Settings

B1RBDR - B6RBDR Settings

Setting tables for B1RBDR - B6RBDR are all similar except for binary channel and description numbers.

- B1RBDR, channel1 - channel16
- B2RBDR, channel17 - channel32
- B3RBDR, channel33 - channel48

- B4RBDR, channel49 - channel64
- B5RBDR, channel65 - channel80
- B6RBDR, channel81 - channel96

Table 305: B1RBDR Non group settings (basic)

Name	Values (Range)	Unit	Step	Default	Description
TrigDR01	Disabled Enabled	-	-	Disabled	Trigger operation On/Off
SetLED01	Disabled Start Trip Pick up and trip	-	-	Disabled	Set LED on HMI for binary channel 1
TrigDR02	Disabled Enabled	-	-	Disabled	Trigger operation On/Off
SetLED02	Disabled Start Trip Pick up and trip	-	-	Disabled	Set LED on HMI for binary channel 2
TrigDR03	Disabled Enabled	-	-	Disabled	Trigger operation On/Off
SetLED03	Disabled Start Trip Pick up and trip	-	-	Disabled	Set LED on HMI for binary channel 3
TrigDR04	Disabled Enabled	-	-	Disabled	Trigger operation On/Off
SetLED04	Disabled Start Trip Pick up and trip	-	-	Disabled	Set LED on HMI for binary channel 4
TrigDR05	Disabled Enabled	-	-	Disabled	Trigger operation On/Off
SetLED05	Disabled Start Trip Pick up and trip	-	-	Disabled	Set LED on HMI for binary channel 5
TrigDR06	Disabled Enabled	-	-	Disabled	Trigger operation On/Off
SetLED06	Disabled Start Trip Pick up and trip	-	-	Disabled	Set LED on HMI for binary channel 6
TrigDR07	Disabled Enabled	-	-	Disabled	Trigger operation On/Off
SetLED07	Disabled Start Trip Pick up and trip	-	-	Disabled	Set LED on HMI for binary channel 7

Table continues on next page

Name	Values (Range)	Unit	Step	Default	Description
TrigDR08	Disabled Enabled	-	-	Disabled	Trigger operation On/Off
SetLED08	Disabled Start Trip Pick up and trip	-	-	Disabled	Set LED on HMI for binary channel 8
TrigDR09	Disabled Enabled	-	-	Disabled	Trigger operation On/Off
SetLED09	Disabled Start Trip Pick up and trip	-	-	Disabled	Set LED on HMI for binary channel 9
TrigDR10	Disabled Enabled	-	-	Disabled	Trigger operation On/Off
SetLED10	Disabled Start Trip Pick up and trip	-	-	Disabled	Set LED on HMI for binary channel 10
TrigDR11	Disabled Enabled	-	-	Disabled	Trigger operation On/Off
SetLED11	Disabled Start Trip Pick up and trip	-	-	Disabled	Set LED on HMI for binary channel 11
TrigDR12	Disabled Enabled	-	-	Disabled	Trigger operation On/Off
SetLED12	Disabled Start Trip Pick up and trip	-	-	Disabled	Set LED on HMI for binary channel 12
TrigDR13	Disabled Enabled	-	-	Disabled	Trigger operation On/Off
SetLED13	Disabled Start Trip Pick up and trip	-	-	Disabled	Set LED on HMI for binary channel 13
TrigDR14	Disabled Enabled	-	-	Disabled	Trigger operation On/Off
SetLED14	Disabled Start Trip Pick up and trip	-	-	Disabled	Set LED on HMI for binary channel 14
TrigDR15	Disabled Enabled	-	-	Disabled	Trigger operation On/Off
SetLED15	Disabled Start Trip Pick up and trip	-	-	Disabled	Set LED on HMI for binary channel 15

Table continues on next page

Name	Values (Range)	Unit	Step	Default	Description
TrigDR16	Disabled Enabled	-	-	Disabled	Trigger operation On/Off
SetLED16	Disabled Start Trip Pick up and trip	-	-	Disabled	Set LED on HMI for binary channel 16
FunType1	0 - 255	-	1	0	Function type for binary channel 1 (IEC -60870-5-103)
InfNo1	0 - 255	-	1	0	Information number for binary channel 1 (IEC -60870-5-103)
FunType2	0 - 255	-	1	0	Function type for binary channel 2 (IEC -60870-5-103)
InfNo2	0 - 255	-	1	0	Information number for binary channel 2 (IEC -60870-5-103)
FunType3	0 - 255	-	1	0	Function type for binary channel 3 (IEC -60870-5-103)
InfNo3	0 - 255	-	1	0	Information number for binary channel 3 (IEC -60870-5-103)
FunType4	0 - 255	-	1	0	Function type for binary channel 4 (IEC -60870-5-103)
InfNo4	0 - 255	-	1	0	Information number for binary channel 4 (IEC -60870-5-103)
FunType5	0 - 255	-	1	0	Function type for binary channel 5 (IEC -60870-5-103)
InfNo5	0 - 255	-	1	0	Information number for binary channel 5 (IEC -60870-5-103)
FunType6	0 - 255	-	1	0	Function type for binary channel 6 (IEC -60870-5-103)
InfNo6	0 - 255	-	1	0	Information number for binary channel 6 (IEC -60870-5-103)
FunType7	0 - 255	-	1	0	Function type for binary channel 7 (IEC -60870-5-103)
InfNo7	0 - 255	-	1	0	Information number for binary channel 7 (IEC -60870-5-103)
FunType8	0 - 255	-	1	0	Function type for binary channel 8 (IEC -60870-5-103)
InfNo8	0 - 255	-	1	0	Information number for binary channel 8 (IEC -60870-5-103)
FunType9	0 - 255	-	1	0	Function type for binary channel 9 (IEC -60870-5-103)
InfNo9	0 - 255	-	1	0	Information number for binary channel 9 (IEC -60870-5-103)
FunType10	0 - 255	-	1	0	Function type for binary channel 10 (IEC -60870-5-103)
InfNo10	0 - 255	-	1	0	Information number for binary channel 10 (IEC -60870-5-103)

Table continues on next page

Name	Values (Range)	Unit	Step	Default	Description
FunType11	0 - 255	-	1	0	Function type for binary channel 11 (IEC -60870-5-103)
InfNo11	0 - 255	-	1	0	Information number for binary channel 11 (IEC -60870-5-103)
FunType12	0 - 255	-	1	0	Function type for binary channel 12 (IEC -60870-5-103)
InfNo12	0 - 255	-	1	0	Information number for binary channel 12 (IEC -60870-5-103)
FunType13	0 - 255	-	1	0	Function type for binary channel 13 (IEC -60870-5-103)
InfNo13	0 - 255	-	1	0	Information number for binary channel 13 (IEC -60870-5-103)
FunType14	0 - 255	-	1	0	Function type for binary channel 14 (IEC -60870-5-103)
InfNo14	0 - 255	-	1	0	Information number for binary channel 14 (IEC -60870-5-103)
FunType15	0 - 255	-	1	0	Function type for binary channel 15 (IEC -60870-5-103)
InfNo15	0 - 255	-	1	0	Information number for binary channel 15 (IEC -60870-5-103)
FunType16	0 - 255	-	1	0	Function type for binary channel 16 (IEC -60870-5-103)
InfNo16	0 - 255	-	1	0	Information number for binary channel 16 (IEC -60870-5-103)

Table 306: B1RBDR Non group settings (advanced)

Name	Values (Range)	Unit	Step	Default	Description
TrigLevel01	Trig on 0 Trig on 1	-	-	Trig on 1	Trigger on positive (1) or negative (0) slope for binary input 1
IndicationMa01	Hide Show	-	-	Hide	Indication mask for binary channel 1
TrigLevel02	Trig on 0 Trig on 1	-	-	Trig on 1	Trigger on positive (1) or negative (0) slope for binary input 2
IndicationMa02	Hide Show	-	-	Hide	Indication mask for binary channel 2
TrigLevel03	Trig on 0 Trig on 1	-	-	Trig on 1	Trigger on positive (1) or negative (0) slope for binary input 3
IndicationMa03	Hide Show	-	-	Hide	Indication mask for binary channel 3
TrigLevel04	Trig on 0 Trig on 1	-	-	Trig on 1	Trigger on positive (1) or negative (0) slope for binary input 4
IndicationMa04	Hide Show	-	-	Hide	Indication mask for binary channel 4

Table continues on next page

Name	Values (Range)	Unit	Step	Default	Description
TrigLevel05	Trig on 0 Trig on 1	-	-	Trig on 1	Trigger on positive (1) or negative (0) slope for binary input 5
IndicationMa05	Hide Show	-	-	Hide	Indication mask for binary channel 5
TrigLevel06	Trig on 0 Trig on 1	-	-	Trig on 1	Trigger on positive (1) or negative (0) slope for binary input 6
IndicationMa06	Hide Show	-	-	Hide	Indication mask for binary channel 6
TrigLevel07	Trig on 0 Trig on 1	-	-	Trig on 1	Trigger on positive (1) or negative (0) slope for binary input 7
IndicationMa07	Hide Show	-	-	Hide	Indication mask for binary channel 7
TrigLevel08	Trig on 0 Trig on 1	-	-	Trig on 1	Trigger on positive (1) or negative (0) slope for binary input 8
IndicationMa08	Hide Show	-	-	Hide	Indication mask for binary channel 8
TrigLevel09	Trig on 0 Trig on 1	-	-	Trig on 1	Trigger on positive (1) or negative (0) slope for binary input 9
IndicationMa09	Hide Show	-	-	Hide	Indication mask for binary channel 9
TrigLevel10	Trig on 0 Trig on 1	-	-	Trig on 1	Trigger on positive (1) or negative (0) slope for binary input 10
IndicationMa10	Hide Show	-	-	Hide	Indication mask for binary channel 10
TrigLevel11	Trig on 0 Trig on 1	-	-	Trig on 1	Trigger on positive (1) or negative (0) slope for binary input 11
IndicationMa11	Hide Show	-	-	Hide	Indication mask for binary channel 11
TrigLevel12	Trig on 0 Trig on 1	-	-	Trig on 1	Trigger on positive (1) or negative (0) slope for binary input 12
IndicationMa12	Hide Show	-	-	Hide	Indication mask for binary channel 12
TrigLevel13	Trig on 0 Trig on 1	-	-	Trig on 1	Trigger on positive (1) or negative (0) slope for binary input 13
IndicationMa13	Hide Show	-	-	Hide	Indication mask for binary channel 13
TrigLevel14	Trig on 0 Trig on 1	-	-	Trig on 1	Trigger on positive (1) or negative (0) slope for binary input 14
IndicationMa14	Hide Show	-	-	Hide	Indication mask for binary channel 14
TrigLevel15	Trig on 0 Trig on 1	-	-	Trig on 1	Trigger on positive (1) or negative (0) slope for binary input 15

Table continues on next page

Name	Values (Range)	Unit	Step	Default	Description
IndicationMa15	Hide Show	-	-	Hide	Indication mask for binary channel 15
TrigLevel16	Trig on 0 Trig on 1	-	-	Trig on 1	Trigger on positive (1) or negative (0) slope for binary input 16
IndicationMa16	Hide Show	-	-	Hide	Indication mask for binary channel 16

13.3.6 Operation principle

Disturbance report DRPRDRE is a common name for several functions to supply the operator, analysis engineer, and so on, with sufficient information about events in the system.

The functions included in the disturbance report are:

- Sequential of events
- Indications
- Event recorder
- Trip value recorder
- Disturbance recorder

Figure 147 shows the relations between Disturbance Report, included functions and function blocks. Sequential of events , Event recorder and Indications uses information from the binary input function blocks (BxRBDR). Trip value recorder uses analog information from the analog input function blocks (AxRADR). Disturbance recorder DRPRDRE acquires information from both AxRADR and BxRBDR.

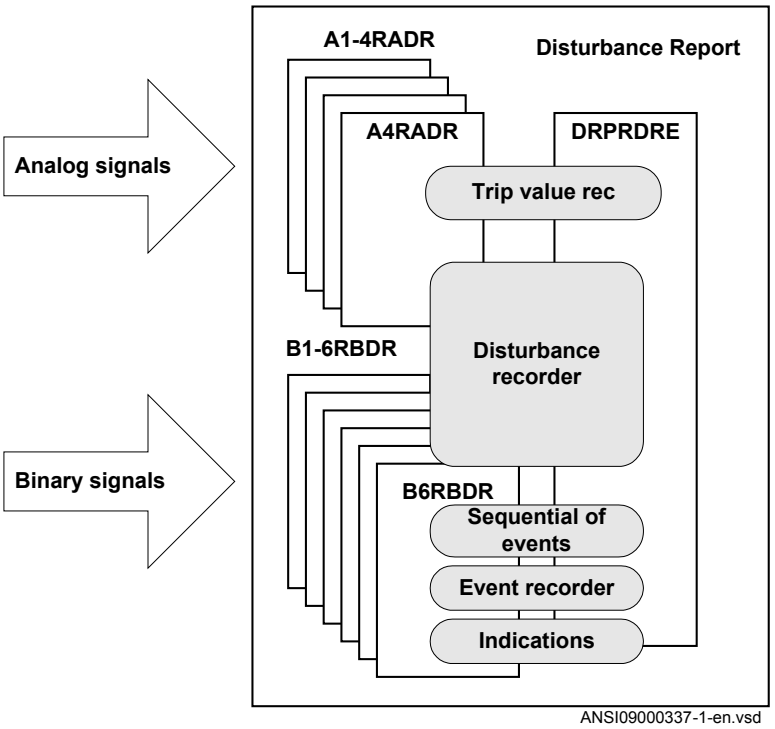

Figure 147: Disturbance report functions and related function blocks

The whole disturbance report can contain information for a number of recordings, each with the data coming from all the parts mentioned above. The sequential of events function is working continuously, independent of disturbance triggering, recording time, and so on. All information in the disturbance report is stored in non-volatile flash memories. This implies that no information is lost in case of loss of auxiliary power. Each report will get an identification number in the interval from 0-999.

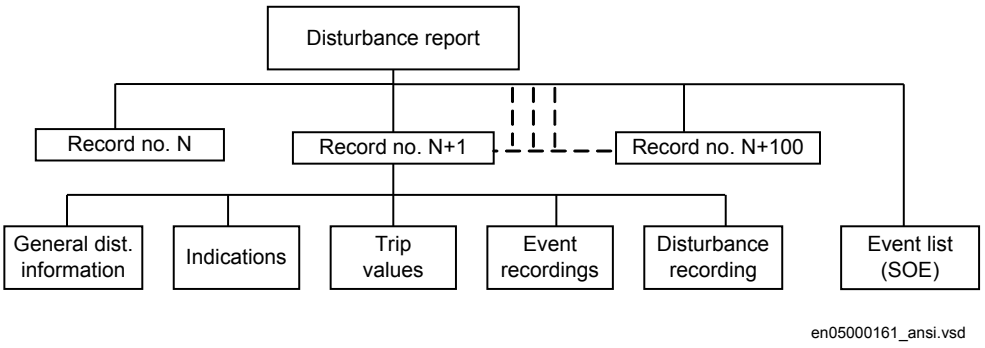

Figure 148: Disturbance report structure

Up to 100 disturbance reports can be stored. If a new disturbance is to be recorded when the memory is full, the oldest disturbance report is overwritten by the new one.

The total recording capacity for the disturbance recorder is depending of sampling frequency, number of analog and binary channels and recording time. In a 60 Hz system it is possible to record 80 where the maximum recording time is 3.4 seconds. The memory limit does not affect the rest of the disturbance report (Sequential of events, Event recorder, Indications and Trip value recorder).

The maximum number of recordings depend on each recordings total recording time. Long recording time will reduce the number of recordings to less than 100.

The IED flash disk should NOT be used to store any user files. This might cause disturbance recordings to be deleted due to lack of disk space.

13.3.6.1 Disturbance information

Date and time of the disturbance, the indications, events, fault location and the trip values are available on the local HMI. To acquire a complete disturbance report the user must use a PC and - either the PCM600 Disturbance handling tool - or a FTP or MMS (over 61850) client. The PC can be connected to the IED front, rear or remotely via the station bus (Ethernet ports).

13.3.6.2 Indications

Indications is a list of signals that were activated during the total recording time of the disturbance (not time-tagged), see Indication section for detailed information.

13.3.6.3 Event recorder

The event recorder may contain a list of up to 150 time-tagged events, which have occurred during the disturbance. The information is available via the local HMI or PCM600, see Event recorder section for detailed information.

13.3.6.4 Sequential of events

The sequetial of events may contain a list of totally 1000 time-tagged events. The list information is continuously updated when selected binary signals change state. The oldest data is overwritten. The logged signals may be presented via local HMI or PCM600, see Sequential of events section for detailed information.

13.3.6.5 Trip value recorder

The recorded trip values include phasors of selected analog signals before the fault and during the fault, see Trip value recorder section for detailed information.

13.3.6.6 Disturbance recorder

Disturbance recorder records analog and binary signal data before, during and after the fault, see Disturbance recorder section for detailed information.

13.3.6.7 Time tagging

The IED has a built-in real-time calendar and clock. This function is used for all time tagging within the disturbance report

13.3.6.8 Recording times

Disturbance report DRPRDRE records information about a disturbance during a settable time frame. The recording times are valid for the whole disturbance report. Disturbance recorder, event recorder and indication function register disturbance data and events during tRecording, the total recording time.

The total recording time, tRecording, of a recorded disturbance is:

tRecording = *PreFaultrecT* + tFault + *PostFaultrecT* or *PreFaultrecT* + *TimeLimit*, depending on which criterion stops the current disturbance recording

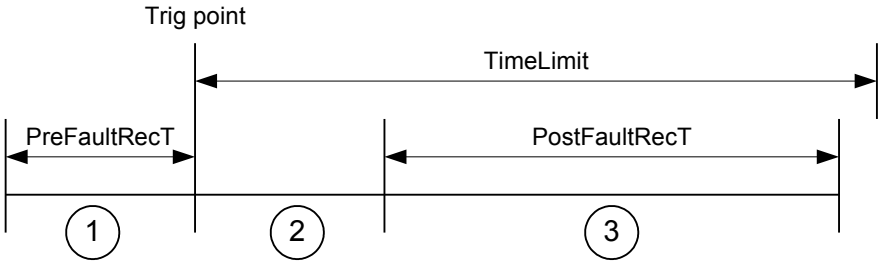

en05000487.vsd

Figure 149: The recording times definition

PreFaultRecT, 1	Pre-fault or pre-trigger recording time. The time before the fault including the operate time of the trigger. Use the setting *PreFaultRecT* to set this time.
tFault, 2	Fault time of the recording. The fault time cannot be set. It continues as long as any valid trigger condition, binary or analog, persists (unless limited by *TimeLimit* the limit time).
PostFaultRecT, 3	Post fault recording time. The time the disturbance recording continues after all activated triggers are reset. Use the setting *PostFaultRecT* to set this time.
TimeLimit	Limit time. The maximum allowed recording time after the disturbance recording was triggered. The limit time is used to eliminate the consequences of a trigger that does not reset within a reasonable time interval. It limits the maximum recording time of a recording and prevents subsequent overwriting of already stored disturbances. Use the setting *TimeLimit* to set this time.

13.3.6.9 Analog signals

Up to 40 analog signals can be selected for recording by the Disturbance recorder and triggering of the Disturbance report function. Out of these 40, 30 are reserved for external analog signals from analog input modules via preprocessing function blocks (SMAI) and summation block (3PHSUM). The last 10 channels may be connected to internally calculated analog signals available as function block output signals (phase differential currents, bias currents and so on).

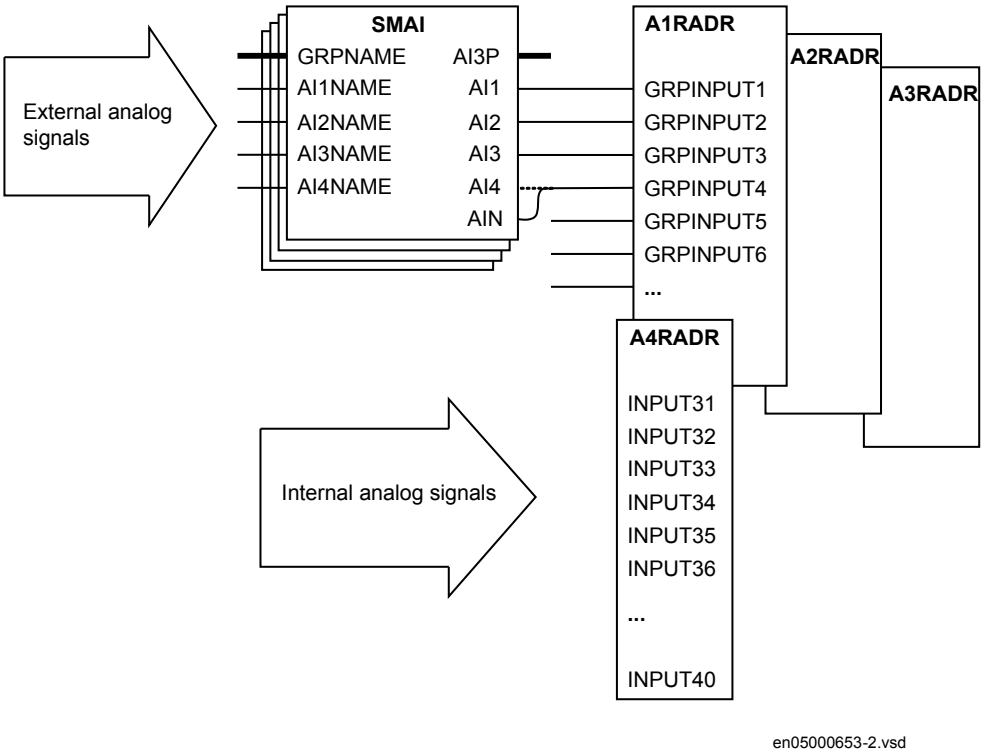

Figure 150: Analog input function blocks

The external input signals will be acquired, filtered and skewed and (after configuration) available as an input signal on the AxRADR function block via the SMAI function block. The information is saved at the Disturbance report base sampling rate (1000 or 1200 Hz). Internally calculated signals are updated according to the cycle time of the specific function. If a function is running at lower speed than the base sampling rate, Disturbance recorder will use the latest updated sample until a new updated sample is available.

Application configuration tool (ACT) is used for analog configuration of the Disturbance report.

The preprocessor function block (SMAI) calculates the residual quantities in cases where only the three phases are connected (AI4-input not used). SMAI makes the information available as a group signal output, phase outputs and calculated residual output (AIN-output). In situations where AI4-input is used as an input signal the corresponding information is available on the non-calculated output (AI4) on the SMAI function block. Connect the signals to the AxRADR accordingly.

For each of the analog signals, *Operation* = *Enabled* means that it is recorded by the disturbance recorder. The trigger is independent of the setting of *Operation*, and

triggers even if operation is set to *Disabled*. Both undervoltage and overvoltage can be used as trigger conditions. The same applies for the current signals.

If *Operation* = *Disabled*, no waveform (samples) will be recorded and reported in graph. However, Trip value, pre-fault and fault value will be recorded and reported. The input channel can still be used to trig the disturbance recorder.

If *Operation* = *Enabled*, waveform (samples) will also be recorded and reported in graph.

The analog signals are presented only in the disturbance recording, but they affect the entire disturbance report when being used as triggers.

13.3.6.10 Binary signals

Up to 96 binary signals can be selected to be handled by disturbance report. The signals can be selected from internal logical and binary input signals. A binary signal is selected to be recorded when:

- the corresponding function block is included in the configuration
- the signal is connected to the input of the function block

Each of the 96 signals can be selected as a trigger of the disturbance report (*Operation* = *Operation—>TrigDR =Disabled*). A binary signal can be selected to activate the yellow (PICKUP) and red (TRIP) LED on the local HMI (*SetLED* = *Disabled/Pickup/ Trip/Pickup and Trip*).

The selected signals are presented in the event recorder, sequential of events and the disturbance recording. But they affect the whole disturbance report when they are used as triggers. The indications are also selected from these 96 signals with local HMI *IndicationMask=Show/Hide*.

13.3.6.11 Trigger signals

The trigger conditions affect the entire disturbance report, except the sequential of events, which runs continuously. As soon as at least one trigger condition is fulfilled, a complete disturbance report is recorded. On the other hand, if no trigger condition is fulfilled, there is no disturbance report, no indications, and so on. This implies the importance of choosing the right signals as trigger conditions.

A trigger can be of type:

- Manual trigger
- Binary-signal trigger
- Analog-signal trigger (over/under function)

Manual trigger

A disturbance report can be manually triggered from the local HMI, PCM600 or via station bus (IEC 61850). When the trigger is activated, the manual trigger signal is generated. This feature is especially useful for testing.

Binary-signal trigger

Any binary signal state (logic one or a logic zero) can be selected to generate a trigger (*Triglevel* = Trig on 0/Trig on 1). When a binary signal is selected to generate a trigger from a logic zero, the selected signal will not be listed in the indications list of the disturbance report.

Analog-signal trigger

All analog signals are available for trigger purposes, no matter if they are recorded in the disturbance recorder or not. The settings are *OverTrigOp*, *UnderTrigOp*, *OverTrigLe* and *UnderTrigLe*.

The check of the trigger condition is based on peak-to-peak values. When this is found, the absolute average value of these two peak values is calculated. If the average value is above the threshold level for an overvoltage or overcurrent trigger, this trigger is indicated with a greater than (>) sign with the user-defined name.

If the average value is below the set threshold level for an undervoltage or undercurrent trigger, this trigger is indicated with a less than (<) sign with its name. The procedure is separately performed for each channel.

This method of checking the analog trigger conditions gives a function which is insensitive to DC offset in the signal. The operate time for this initiation is typically in the range of one cycle, 16 2/3 ms for a 60 Hz network.

All under/over trig signal information is available on the local HMI and PCM600.

13.3.6.12 Post Retrigger

Disturbance report function does not automatically respond to any new trig condition during a recording, after all signals set as trigger signals have been reset. However, under certain circumstances the fault condition may reoccur during the post-fault recording, for instance by automatic reclosing to a still faulty power line.

In order to capture the new disturbance it is possible to allow retriggering (*PostRetrig* = *Enabled*) during the post-fault time. In this case a new, complete recording will start and, during a period, run in parallel with the initial recording.

When the retrig parameter is disabled (*PostRetrig* = *Disabled*), a new recording will not start until the post-fault (*PostFaultrecT* or *TimeLimit*) period is terminated. If a new trig occurs during the post-fault period and lasts longer than the proceeding recording a new complete recording will be started.

Disturbance report function can handle maximum 3 simultaneous disturbance recordings.

13.3.7 Technical data

Table 307: DRPRDRE technical data

Function	Range or value	Accuracy
Current recording	-	± 1,0% of I_r at I ≤ I_r ± 1,0% of I at I > Ir
Voltage recording	-	± 1,0% of V_n at V≤ V_n ± 1,0% of Vat V> V_n
Pre-fault time	(0.05–3.00) s	-
Post-fault time	(0.1–10.0) s	-
Limit time	(0.5–8.0) s	-
Maximum number of recordings	100, first in - first out	-
Time tagging resolution	1 ms	See time synchronization technical data
Maximum number of analog inputs	30 + 10 (external + internally derived)	-
Maximum number of binary inputs	96	-
Maximum number of phasors in the Trip Value recorder per recording	30	-
Maximum number of indications in a disturbance report	96	-
Maximum number of events in the Event recording per recording	150	-
Maximum number of events in the Sequence of events	1000, first in - first out	-
Maximum total recording time (3.4 s recording time and maximum number of channels, typical value)	340 seconds (100 recordings) at 50 Hz, 280 seconds (80 recordings) at 60 Hz	-
Sampling rate	1 kHz at 50 Hz 1.2 kHz at 60 Hz	-
Recording bandwidth	(5-300) Hz	-

13.4 Indications

13.4.1 Functionality

To get fast, condensed and reliable information about disturbances in the primary and/or in the secondary system it is important to know, for example binary signals that

have changed status during a disturbance. This information is used in the short perspective to get information via the local HMI in a straightforward way.

There are three LEDs on the local HMI (green, yellow and red), which will display status information about the IED and the Disturbance report function (triggered).

The Indication list function shows all selected binary input signals connected to the Disturbance report function that have changed status during a disturbance.

13.4.2 Function block

The Indications function has no function block of it's own.

13.4.3 Signals

13.4.3.1 Input signals

The Indications function logs the same binary input signals as the Disturbance report function.

13.4.4 Operation principle

The LED indications display this information:

Green LED:

Steady light	In Service
Flashing light	Internal fail
Dark	No power supply

Yellow LED:

Function controlled by *SetLEDn* setting in Disturbance report function.

Red LED:

Function controlled by *SetLEDn* setting in Disturbance report function.

Indication list:

The possible indication signals are the same as the ones chosen for the disturbance report function and disturbance recorder.

The indication function tracks 0 to 1 changes of binary signals during the recording period of the collection window. This means that constant logic zero, constant logic one or state changes from logic one to logic zero will not be visible in the list of indications. Signals are not time tagged. In order to be recorded in the list of indications the:

- the signal must be connected to binary input BxRBDR function block
- the DRPRDRE parameter *Operation* must be set *Enabled*
- the DRPRDRE must be trigged (binary or analog)
- the input signal must change state from logical 0 to 1 during the recording time.

Indications are selected with the indication mask (*IndicationMask*) when setting the binary inputs.

The name of the binary signal that appears in the Indication function is the user-defined name assigned at configuration of the IED. The same name is used in disturbance recorder function, indications and event recorder function.

13.4.5 Technical data

Table 308: DRPRDRE technical data

Function		Value
Buffer capacity	Maximum number of indications presented for single disturbance	96
	Maximum number of recorded disturbances	100

13.5 Event recorder

13.5.1 Functionality

Quick, complete and reliable information about disturbances in the primary and/or in the secondary system is vital, for example, time-tagged events logged during disturbances. This information is used for different purposes in the short term (for example corrective actions) and in the long term (for example functional analysis).

The event recorder logs all selected binary input signals connected to the Disturbance report function. Each recording can contain up to 150 time-tagged events.

The event recorder information is available for the disturbances locally in the IED.

The event recording information is an integrated part of the disturbance record (Comtrade file).

13.5.2 Function block

The Event recorder has no function block of it’s own.

13.5.3 Signals

13.5.3.1 Input signals

The Event recorder function logs the same binary input signals as the Disturbance report function.

13.5.4 Operation principle

When one of the trig conditions for the disturbance report is activated, the event recorder logs every status change in the 96 selected binary signals. The events can be generated by both internal logical signals and binary input channels. The internal signals are time-tagged in the main processor module, while the binary input channels are time-tagged directly in each I/O module. The events are collected during the total recording time (pre-, post-fault and limit time), and are stored in the disturbance report flash memory at the end of each recording.

In case of overlapping recordings, due to *PostRetrig* = *Enabled* and a new trig signal appears during post-fault time, events will be saved in both recording files.

The name of the binary input signal that appears in the event recording is the user-defined name assigned when configuring the IED. The same name is used in the disturbance recorder function , indications and event recorder function.

The event record is stored as a part of the disturbance report information and managed via the local HMI or PCM600.

Events can not be read from the IED if more than one user is accessing the IED simultaneously.

13.5.5 Technical data

Table 309: DRPRDRE technical data

Function		Value
Buffer capacity	Maximum number of events in disturbance report	150
	Maximum number of disturbance reports	100
Resolution		1 ms
Accuracy		Depending on time synchronizing

13.6 Sequential of events

13.6.1 Functionality

Continuous event-logging is useful for monitoring the system from an overview perspective and is a complement to specific disturbance recorder functions.

The sequential of events logs all binary input signals connected to the Disturbance report function. The list may contain up to 1000 time-tagged events stored in a FIFO-buffer.

13.6.2 Function block

The Sequential of events has no function block of it’s own.

13.6.3 Signals

13.6.3.1 Input signals

The Sequential of events logs the same binary input signals as configured for the Disturbance report function.

13.6.4 Operation principle

When a binary signal, connected to the disturbance report function, changes status, the sequential of events function stores input name, status and time in the sequential of events in chronological order. The list can contain up to 1000 events from both internal logic signals and binary input channels. If the list is full, the oldest event is overwritten when a new event arrives.

The list can be configured to show oldest or newest events first with a setting on the local HMI.

The sequential of events function runs continuously, in contrast to the event recorder function, which is only active during a disturbance, and each event record is an integral part of its associated DR.

The name of the binary signal that appears in the event recording is the user-defined name assigned when the IED is configured. The same name is used in the disturbance recorder function , indications and the event recorder function .

The sequential of events is stored and managed separate from the disturbance report information.

13.6.5 Technical data

Table 310: DRPRDRE technical data

Function		Value
Buffer capacity	Maximum number of events in the list	1000
Resolution		1 ms
Accuracy		Depending on time synchronizing

13.7 Trip value recorder

13.7.1 Functionality

Information about the pre-fault and fault values for currents and voltages are vital for the disturbance evaluation.

The Trip value recorder calculates the values of all selected analog input signals connected to the Disturbance report function. The result is magnitude and phase angle before and during the fault for each analog input signal.

The trip value recorder information is available for the disturbances locally in the IED.

The trip value recorder information is an integrated part of the disturbance record (Comtrade file).

13.7.2 Function block

The Trip value recorder has no function block of it’s own.

13.7.3 Signals

13.7.3.1 Input signals

The trip value recorder function uses analog input signals connected to A1RADR to A3RADR (not A4RADR).

13.7.4 Operation principle

Trip value recorder calculates and presents both fault and pre-fault magnitudes as well as the phase angles of all the selected analog input signals. The parameter *ZeroAngleRef* points out which input signal is used as the angle reference.

When the disturbance report function is triggered the sample for the fault interception is searched for, by checking the non-periodic changes in the analog input signals. The channel search order is consecutive, starting with the analog input with the lowest number.

When a fault interception point is found, the Fourier estimation of the pre-fault values of the complex values of the analog signals starts 1.5 cycle before the fault sample. The estimation uses samples during one period. The post-fault values are calculated using the Recursive Least Squares (RLS) method. The calculation starts a few samples after the fault sample and uses samples during 1/2 - 2 cycles depending on the shape of the signals.

If no starting point is found in the recording, the disturbance report trig sample is used as the start sample for the Fourier estimation. The estimation uses samples during one cycle before the trig sample. In this case the calculated values are used both as pre-fault and fault values.

The name of the analog signal that appears in the Trip value recorder function is the user-defined name assigned when the IED is configured. The same name is used in the Disturbance recorder function .

The trip value record is stored as a part of the disturbance report information and managed in PCM600 or via the local HMI.

13.7.5 Technical data

Table 311: DRPRDRE technical data

Function		Value
Buffer capacity	Maximum number of analog inputs	30
	Maximum number of disturbance reports	100

13.8 Disturbance recorder

13.8.1 Functionality

The Disturbance recorder function supplies fast, complete and reliable information about disturbances in the power system. It facilitates understanding system behavior and related primary and secondary equipment during and after a disturbance. Recorded information is used for different purposes in the short perspective (for example corrective actions) and long perspective (for example functional analysis).

The Disturbance recorder acquires sampled data from selected analog- and binary signals connected to the Disturbance report function (maximum 40 analog and 96 binary signals). The binary signals available are the same as for the event recorder function.

The function is characterized by great flexibility and is not dependent on the operation of protection functions. It can record disturbances not detected by protection functions. Up to three seconds of data before the trigger instant can be saved in the disturbance file.

The disturbance recorder information for up to 100 disturbances are saved in the IED and the local HMI is used to view the list of recordings.

13.8.2 Function block

The Disturbance recorder has no function block of it’s own.

13.8.3 Signals

See Disturbance report for input and output signals.

13.8.4 Settings

See Disturbance report for settings.

13.8.5 Operation principle

Disturbance recording is based on the acquisition of binary and analog signals. The binary signals can be either true binary input signals or internal logical signals generated by the functions in the IED. The analog signals to be recorded are input channels from the Transformer Input Module (TRM) through the Signal Matrix Analog Input (SMAI) and possible summation (Sum3Ph) function blocks and some internally derived analog signals.

Disturbance recorder collects analog values and binary signals continuously, in a cyclic buffer. The pre-fault buffer operates according to the FIFO principle; old data will continuously be overwritten as new data arrives when the buffer is full. The size of this buffer is determined by the set pre-fault recording time.

Upon detection of a fault condition (triggering), the disturbance is time tagged and the data storage continues in a post-fault buffer. The storage process continues as long as the fault condition prevails - plus a certain additional time. This is called the post-fault time and it can be set in the disturbance report.

The above mentioned two parts form a disturbance recording. The whole memory, intended for disturbance recordings, acts as a cyclic buffer and when it is full, the oldest recording is overwritten. Up to the last 100 recordings are stored in the IED.

The time tagging refers to the activation of the trigger that starts the disturbance recording. A recording can be trigged by, manual start, binary input and/or from analog inputs (over-/underlevel trig).

A user-defined name for each of the signals can be set. These names are common for all functions within the disturbance report functionality.

13.8.5.1 Memory and storage

The maximum number of recordings depend on each recordings total recording time. Long recording time will reduce the number of recordings to less than 100.

The IED flash disk should NOT be used to store any user files. This might cause disturbance recordings to be deleted due to lack of disk space.

When a recording is completed, a post recording processing occurs.

This post-recording processing comprises:

- Saving the data for analog channels with corresponding data for binary signals
- Add relevant data to be used by the Disturbance handling tool (part of PCM 600)
- Compression of the data, which is performed without losing any data accuracy
- Storing the compressed data in a non-volatile memory (flash memory)

The recorded disturbance is now ready for retrieval and evaluation.

The recording files comply with the Comtrade standard IEC 60255-24 and are divided into three files; a header file (HDR), a configuration file (CFG) and a data file (DAT).

The header file (optional in the standard) contains basic information about the disturbance, that is, information from the Disturbance report sub-functions. The Disturbance handling tool use this information and present the recording in a user-friendly way.

General:

- Station name, object name and unit name
- Date and time for the trig of the disturbance
- Record number
- Sampling rate
- Time synchronization source
- Recording times
- Activated trig signal
- Active setting group

Analog:

- Signal names for selected analog channels
- Information e.g. trig on analog inputs
- Primary and secondary instrument transformer rating
- Over- or Undertrig: level and operation
- Over- or Undertrig status at time of trig
- CT direction

Binary:

- Signal names
- Status of binary input signals

The configuration file is a mandatory file containing information needed to interpret the data file. For example sampling rate, number of channels, system frequency, channel info etc.

The data file, which also is mandatory, containing values for each input channel for each sample in the record (scaled value). The data file also contains a sequence number and time stamp for each set of samples.

13.8.6 Technical data

Table 312: DRPRDRE technical data

Function		Value
Buffer capacity	Maximum number of analog inputs	40
	Maximum number of binary inputs	96
	Maximum number of disturbance reports	100
Maximum total recording time (3.4 s recording time and maximum number of channels, typical value)		340 seconds (100 recordings) at 50 Hz 280 seconds (80 recordings) at 60 Hz

13.9 IEC 61850 generic communication I/O functions SPGGIO

13.9.1 Identification

Function description	IEC 61850 identification	IEC 60617 identification	ANSI/IEEE C37.2 device number
IEC 61850 generic communication I/O functions	SPGGIO	-	-

13.9.2 Functionality

IEC61850 generic communication I/O functions (SPGGIO) is used to send one single logical signal to other systems or equipment in the substation.

13.9.3 Function block

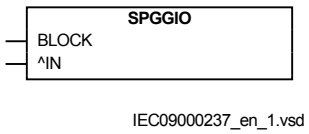

Figure 151: SPGGIO function block

13.9.4 Signals

Table 313: SPGGIO Input signals

Name	Type	Default	Description
BLOCK	BOOLEAN	0	Block of function
IN	BOOLEAN	0	Input status

13.9.5 Settings

The function does not have any parameters available in Local HMI or Protection and Control IED Manager (PCM600).

13.9.6 Operation principle

Upon receiving a signal at its input, IEC61850 generic communication I/O functions (SPGGIO) function sends the signal over IEC 61850-8-1 to the equipment or system that requests this signal. To get the signal, PCM600 must be used to define which function block in which equipment or system should receive this information.

13.10 IEC 61850 generic communication I/O functions 16 inputs SP16GGIO

13.10.1 Identification

Function description	IEC 61850 identification	IEC 60617 identification	ANSI/IEEE C37.2 device number
IEC 61850 generic communication I/O functions 16 inputs	SP16GGIO	-	-

13.10.2 Functionality

IEC 61850 generic communication I/O functions 16 inputs (SP16GGIO) function is used to send up to 16 logical signals to other systems or equipment in the substation.

13.10.3 Function block

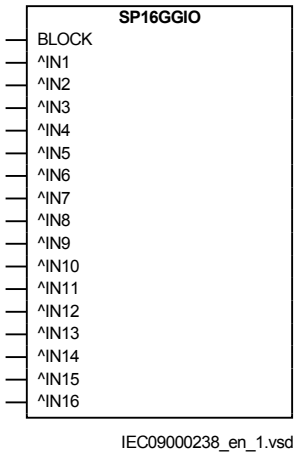

Figure 152: SP16GGIO function block

13.10.4 Signals

Table 314: SP16GGIO Input signals

Name	Type	Default	Description
BLOCK	BOOLEAN	0	Block of function
IN1	BOOLEAN	0	Input 1 status
IN2	BOOLEAN	0	Input 2 status
IN3	BOOLEAN	0	Input 3 status
IN4	BOOLEAN	0	Input 4 status
IN5	BOOLEAN	0	Input 5 status
IN6	BOOLEAN	0	Input 6 status
IN7	BOOLEAN	0	Input 7 status
IN8	BOOLEAN	0	Input 8 status
IN9	BOOLEAN	0	Input 9 status
IN10	BOOLEAN	0	Input 10 status
IN11	BOOLEAN	0	Input 11 status
IN12	BOOLEAN	0	Input 12 status
IN13	BOOLEAN	0	Input 13 status
IN14	BOOLEAN	0	Input 14 status
IN15	BOOLEAN	0	Input 15 status
IN16	BOOLEAN	0	Input 16 status

13.10.5 Settings

The function does not have any parameters available in Local HMI or Protection and Control IED Manager (PCM600).

13.10.6 MonitoredData

Table 315: SP16GGIO Monitored data

Name	Type	Values (Range)	Unit	Description
OUT1	GROUP SIGNAL	-	-	Output 1 status
OUT2	GROUP SIGNAL	-	-	Output 2 status
OUT3	GROUP SIGNAL	-	-	Output 3 status
OUT4	GROUP SIGNAL	-	-	Output 4 status
OUT5	GROUP SIGNAL	-	-	Output 5 status
OUT6	GROUP SIGNAL	-	-	Output 6 status
OUT7	GROUP SIGNAL	-	-	Output 7 status
OUT8	GROUP SIGNAL	-	-	Output 8 status
OUT9	GROUP SIGNAL	-	-	Output 9 status
OUT10	GROUP SIGNAL	-	-	Output 10 status
OUT11	GROUP SIGNAL	-	-	Output 11 status
OUT12	GROUP SIGNAL	-	-	Output 12 status
OUT13	GROUP SIGNAL	-	-	Output 13 status
OUT14	GROUP SIGNAL	-	-	Output 14 status
OUT15	GROUP SIGNAL	-	-	Output 15 status
OUT16	GROUP SIGNAL	-	-	Output 16 status
OUTOR	GROUP SIGNAL	-	-	Output status logic OR gate for input 1 to 16

13.10.7 Operation principle

Upon receiving signals at its inputs, IEC 61850 generic communication I/O functions 16 inputs (SP16GGIO) function will send the signals over IEC 61850-8-1 to the equipment or system that requests this signals. To be able to get the signal, one must use other tools, described in the Engineering manual and define which function block in which equipment or system should receive this information.

There are also 16 output signals that show the input status for each input as well as an OR type output combined for all 16 input signals. These output signals are handled in PST.

13.11 IEC 61850 generic communication I/O functions MVGGIO

13.11.1 Identification

Function description	IEC 61850 identification	IEC 60617 identification	ANSI/IEEE C37.2 device number
IEC61850 generic communication I/O functions	MVGGIO	-	-

13.11.2 Functionality

IEC61850 generic communication I/O functions (MVGGIO) function is used to send the instantaneous value of an analog signal to other systems or equipment in the substation. It can also be used inside the same IED, to attach a RANGE aspect to an analog value and to permit measurement supervision on that value.

13.11.3 Function block

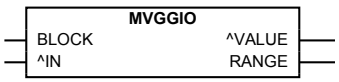

IEC09000239-2-en.vsd

13.11.4 Signals

Table 316: MVGGIO Input signals

Name	Type	Default	Description
BLOCK	BOOLEAN	0	Block of function
IN	REAL	0	Analog input value

Table 317: MVGGIO Output signals

Name	Type	Description
VALUE	REAL	Magnitude of deadband value
RANGE	INTEGER	Range

13.11.5 Settings

Table 318: MVGGIO Non group settings (basic)

Name	Values (Range)	Unit	Step	Default	Description
BasePrefix	micro milli unit kilo Mega Giga Tera	-	-	unit	Base prefix (multiplication factor)
MV db	1 - 300	Type	1	10	Cycl: Report interval (s), Db: In % of range, Int Db: In %s
MV zeroDb	0 - 100000	m%	1	500	Zero point clamping in 0.001% of range
MV hhLim	-5000.00 - 5000.00	xBase	0.01	900.00	High High limit multiplied with the base prefix (multiplication factor)
MV hLim	-5000.00 - 5000.00	xBase	0.01	800.00	High limit multiplied with the base prefix (multiplication factor)
MV lLim	-5000.00 - 5000.00	xBase	0.01	-800.00	Low limit multiplied with the base prefix (multiplication factor)
MV llLim	-5000.00 - 5000.00	xBase	0.01	-900.00	Low Low limit multiplied with the base prefix (multiplication factor)
MV min	-5000.00 - 5000.00	xBase	0.01	-1000.00	Minimum value multiplied with the base prefix (multiplication factor)
MV max	-5000.00 - 5000.00	xBase	0.01	1000.00	Maximum value multiplied with the base prefix (multiplication factor)
MV dbType	Cyclic Dead band Int deadband	-	-	Dead band	Reporting type
MV limHys	0.000 - 100.000	%	0.001	5.000	Hysteresis value in % of range (common for all limits)

13.11.6 Monitored data

Table 319: MVGGIO Monitored data

Name	Type	Values (Range)	Unit	Description
VALUE	REAL	-	-	Magnitude of deadband value
RANGE	INTEGER	0=Normal 1=High 2=Low 3=High-High 4=Low-Low	-	Range

13.11.7 Operation principle

Upon receiving an analog signal at its input, IEC61850 generic communication I/O functions (MVGGIO) will give the instantaneous value of the signal and the range, as output values. In the same time, it will send over IEC 61850-8-1 the value, to other IEC 61850 clients in the substation.

13.12 Measured value expander block MVEXP

13.12.1 Identification

Function description	IEC 61850 identification	IEC 60617 identification	ANSI/IEEE C37.2 device number
Measured value expander block	MVEXP	-	-

13.12.2 Functionality

The current and voltage measurements functions (CVMMXN, CMMXU, VMMXU and VNMMXU), current and voltage sequence measurement functions (CMSQI and VMSQI) and IEC 61850 generic communication I/O functions (MVGGIO) are provided with measurement supervision functionality. All measured values can be supervised with four settable limits: low-low limit, low limit, high limit and high-high limit. The measure value expander block has been introduced to enable translating the integer output signal from the measuring functions to 5 binary signals: below low-low limit, below low limit, normal, above high-high limit or above high limit. The output signals can be used as conditions in the configurable logic or for alarming purpose.

13.12.3 Function block

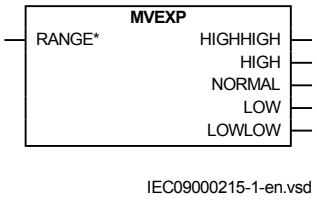

Figure 153: MVEXP function block

13.12.4 Signals

Table 320: MVEXP Input signals

Name	Type	Default	Description
RANGE	INTEGER	0	Measured value range

Table 321: MVEXP Output signals

Name	Type	Description
HIGHHIGH	BOOLEAN	Measured value is above high-high limit
HIGH	BOOLEAN	Measured value is between high and high-high limit
NORMAL	BOOLEAN	Measured value is between high and low limit
LOW	BOOLEAN	Measured value is between low and low-low limit
LOWLOW	BOOLEAN	Measured value is below low-low limit

13.12.5 Settings

The function does not have any parameters available in Local HMI or Protection and Control IED Manager (PCM600).

GlobalBaseSel: Selects the global base value group used by the function to define (*IBase*), (*VBase*) and (*SBase*).

13.12.6 Operation principle

The input signal must be connected to a range output of a measuring function block (CVMMXN, CMMXU, VMMXU, VNMMXU, CMSQI, VMSQ or MVGGIO). The function block converts the input integer value to five binary output signals according to table 322.

Table 322: Input integer value converted to binary output signals

Measured supervised value is: / Output:	below low-low limit	between low-low and low limit	between low and high limit	between high-high and high limit	above high-high limit
LOWLOW	High				
LOW		High			
NORMAL			High		
HIGH				High	
HIGHHIGH					High

13.13 Station battery supervision SPVNZBAT

13.13.1 Identification

Function description	IEC 61850 identification	IEC 60617 identification	ANSI/IEEE C37.2 device number
Station battery supervision function	SPVNZBAT	U<>	-

13.13.2 Function block

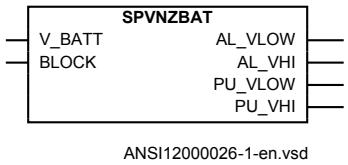

Figure 154: Function block

13.13.3 Functionality

The station battery supervision function SPVNZBAT is used for monitoring battery terminal voltage.

SPVNZBAT activates the start and alarm outputs when the battery terminal voltage exceeds the set upper limit or drops below the set lower limit. A time delay for the overvoltage and undervoltage alarms can be set according to definite time characteristics.

In the definite time (DT) mode, SPVNZBAT operates after a predefined operate time and resets when the battery undervoltage or overvoltage condition disappears after reset time.

13.13.4 Signals

Table 323: SPVNZBAT Input signals

Name	Type	Default	Description
V_BATT	REAL	0.00	Battery terminal voltage that has to be supervised
BLOCK	BOOLEAN	0	Blocks all the output signals of the function

Table 324: SPVNZBAT Output signals

Name	Type	Description
AL_VLOW	BOOLEAN	Alarm when voltage has been below low limit for a set time
AL_VHI	BOOLEAN	Alarm when voltage has exceeded high limit for a set time
PU_VLOW	BOOLEAN	Pick up signal when battery voltage drops below lower limit
PU_VHI	BOOLEAN	Pick up signal when battery voltage exceeds upper limit

13.13.5 Settings

Table 325: SPVNZBAT Non group settings (basic)

Name	Values (Range)	Unit	Step	Default	Description
Operation	Disabled Enabled	-	-	Enabled	Disable/Enable Operation
RtdBattVolt	20.00 - 250.00	V	1.00	110.00	Battery rated voltage
BattVoltLowLim	60 - 140	%Vbat	1	70	Lower limit for the battery terminal voltage
BattVoltHiLim	60 - 140	%Vbat	1	120	Upper limit for the battery terminal voltage
tDelay	0.000 - 60.000	s	0.001	0.200	Delay time for alarm
tReset	0.000 - 60.000	s	0.001	0.000	Time delay for reset of alarm

13.13.6 Measured values

Table 326: SPVNZBAT Measured values

Name	Type	Default	Description
V_BATT	REAL	0.00	Battery terminal voltage that has to be supervised
BLOCK	BOOLEAN	0	Blocks all the output signals of the function

13.13.7 Monitored Data

Table 327: SPVNZBAT Monitored data

Name	Type	Values (Range)	Unit	Description
BATTVOLT	REAL	-	kV	Service value of the battery terminal voltage

13.13.8 Operation principle

The function can be enabled and disabled with the *Operation* setting. The corresponding parameter values are *Enable* and *Disable*.

The function execution requires that at least one of the function outputs is connected in configuration.

The operation of the station battery supervision function can be described by using a module diagram. All the modules in the diagram are explained in the next sections.

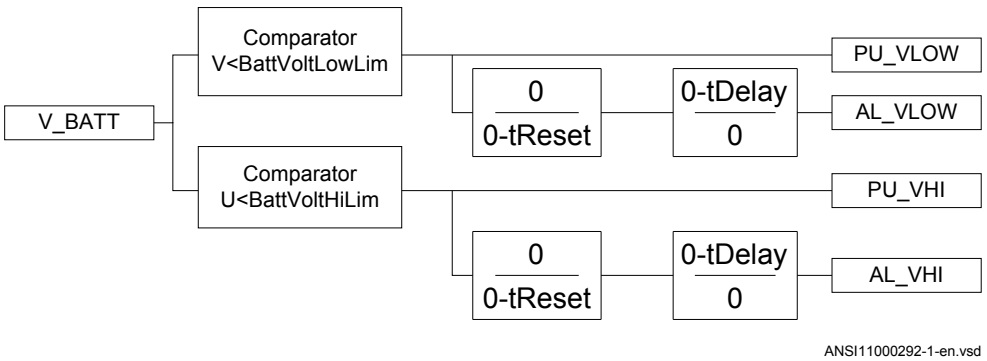

Figure 155: Functional module diagram

The battery rated voltage is set with the *RtdBattVolt* setting. The value of the *BattVoltLowLim* and *BattVoltHiLim* settings are given in relative per unit to the *RtdBattVolt* setting.

It is possible to block the function outputs by the BLOCK input.

Low level detector

The level detector compares the battery voltage V_BATT with the set value of the *BattVoltLowLim* setting. If the value of the V_BATT input drops below the set value of the *BattVoltLowLim* setting, the pickup signal PU_VLOW is activated.

The measured voltage between the battery terminals V_BATT is available through the Monitored data view.

High level detector

The level detector compares the battery voltage V_BATT with the set value of the *BattVoltHiLim* setting. If the value of the V_BATT input exceeds the set value of the *BattVoltHiLim* setting, the pickup signal PU_VHI is activated.

Time delay

When the operate timer has reached the value set by the *tDelay* setting, the AL_VLOW and AL_VHI outputs are activated. If the voltage returns to the normal value before the module operates, the reset timer is activated. If the reset timer reaches the value set by *tReset*, the operate timer resets and the PU_VLOW and AL_VHI outputs are deactivated.

13.13.9 Technical data

Table 328: SPVNZBAT Technical data

Function	Range or value	Accuracy
Lower limit for the battery terminal voltage	(60-140) % of Vbat	± 1.0% of set battery voltage
Reset ratio, lower limit	<105 %	-
Upper limit for the battery terminal voltage	(60-140) % of Vbat	± 1.0% of set battery voltage
Reset ratio, upper limit	>95 %	-
Timers	(0.000-60.000) s	± 0.5% ± 110 ms

13.14 Insulation gas monitoring function SSIMG (63)

13.14.1 Identification

Function description	IEC 61850 identification	IEC 60617 identification	ANSI/IEEE C37.2 device number
Insulation gas monitoring function	SSIMG	-	63

13.14.2 Functionality

Insulation gas monitoring function SSIMG (63) is used for monitoring the circuit breaker condition. Binary information based on the gas pressure in the circuit breaker is used as input signals to the function. In addition, the function generates alarms based on received information.

13.14.3 Function block

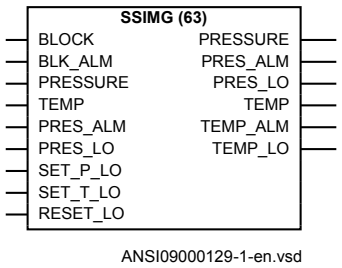

Figure 156: SSIMG (63) function block

13.14.4 Signals

Inputs PRESSURE and TEMP together with settings *PressAlmLimit*, *PressLOLimit*, *TempAlarmLimit* and *TempLOLimit* are not supported in this release of 650 series.

13.14.4.1 SSIMG InputSignals

Table 329: Input signals for the function block SSIMG (GM01-)

Signal	Description
BLOCK	Block of function
BLK_ALM	Block all the alarms
PRESSURE	Pressure input from CB
TEMP	Temperature of the insulation medium from CB
PRES_ALM	Pressure alarm signal
PRES_LO	Pressure lockout signal
SET_P_LO	Set pressure lockout
SET_T_LO	Set temperature lockout
RESET_LO	Reset pressure and temperature lockout

13.14.4.2 SSIMG OutputSignals

Table 330: Output signals for the function block SSIMG (GM01-)

Signal	Description
PRESSURE	Pressure service value
PRES_ALM	Pressure below alarm level
PRES_LO	Pressure below lockout level
TEMP	Temperature of the insulation medium
TEMP_ALM	Temperature above alarm level
TEMP_LO	Temperature above lockout level

13.14.5 Settings

13.14.5.1 SSIMG Settings

Table 331: Basic parameter group settings for the function SSIMG (GM01-)

Parameter	Range	Step	Default	Unit	Description
Operation	Off On	-	Off	-	Operation Off / On
PressAlmLimit	0.00 - 25.00	0.01	5.00	-	Alarm setting for pressure
PressLOLimit	0.00 - 25.00	0.01	3.00	-	Pressure lockout setting
TempAlarmLimit	-40.00 - 200.00	0.01	30.00	-	Temperature alarm level setting of the medium
TempLOLimit	-40.00 - 200.00	0.01	30.00	-	Temperature lockout level of the medium
tPressureAlarm	0.000 - 60.000	0.001	0.000	s	Time delay for pressure alarm
tPressureLO	0.000 - 60.000	0.001	0.000	s	Time delay for pressure lockout indication
tTempAlarm	0.000 - 60.000	0.001	0.000	s	Time delay for temperature alarm
tTempLockOut	0.000 - 60.000	0.001	0.000	s	Time delay for temperture lockout
tResetPressAlm	0.000 - 60.000	0.001	0.000	s	Reset time delay for pressure alarm
tResetPressLO	0.000 - 60.000	0.001	0.000	s	Reset time delay for pressure lockout
tResetTempLO	0.000 - 60.000	0.001	0.000	s	Reset time delay for temperture lockout
tResetTempAlm	0.000 - 60.000	0.001	0.000	s	Reset time delay for temperture alarm

13.14.6 Operation principle

Insulation gas monitoring function SSIMG (63) is used to monitor gas pressure in the circuit breaker. Two binary output signals are used from the circuit breaker to initiate alarm signals, pressure below alarm level and pressure below lockout level. If the input signal PRES_ALM is high, which indicate that the gas pressure in the circuit breaker is below alarm level, the function initiates output signal PRES_ALM, pressure below alarm level, after a set time delay and indicate that maintenance of the circuit breaker is required. Similarly, if the input signal PRES_LO is high, which indicate gas pressure in the circuit breaker is below lockout level, the function initiates output signal PRES_LO, after a time delay. The two time delay settings, *tPressureAlarm* and *tPressureLO*, are included in order not to initiate any alarm for short sudden changes in the gas pressure. If the gas pressure in the circuit breaker goes below the levels for more than the set time delays the corresponding signals, PRES_ALM, pressure below alarm level and PRES_LO, pressure below lockout level alarm will be obtained.

The input signal BLK_ALM is used to block the two alarms and the input signal BLOCK to block both alarms and the function.

13.14.7 Technical data

Table 332: SSIMG (63) Technical data

Function	Range or value	Accuracy
Pressure alarm	0.00-25.00	-
Pressure lockout	0.00-25.00	-
Temperature alarm	-40.00-200.00	-
Temperature lockout	-40.00-200.00	-
Timers	(0.000-60.000) s	± 0.5% ± 110 ms

13.15 Insulation liquid monitoring function SSIML (71)

13.15.1 Identification

Function description	IEC 61850 identification	IEC 60617 identification	ANSI/IEEE C37.2 device number
Insulation liquid monitoring function	SSIML	-	71

13.15.2 Functionality

Insulation liquid monitoring function SSIML (71) is used for monitoring the circuit breaker condition. Binary information based on the oil level in the circuit breaker is used as input signals to the function. In addition, the function generates alarms based on received information.

13.15.3 Function block

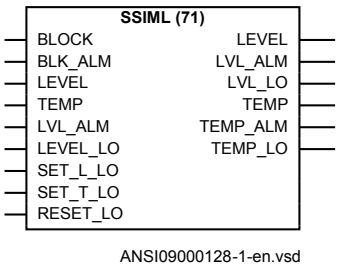

Figure 157: SSIML (71) function block

13.15.4 Signals

Inputs LEVEL and TEMP together with settings *LevelAlmLimit*, *LevelLOLimit*, *TempAlarmLimit* and *TempLOLimit* are not supported in this release of 650 series.

13.15.4.1 SSIML InputSignals

Table 333: Input signals for the function block SSIML (LM1-)

Signal	Description
BLOCK	Block of function
BLK_ALM	Block all the alarms
LEVEL	Level input from CB
TEMP	Temperature of the insulation medium from CB
LVL_ALM	Level alarm signal
LEVEL_LO	Level lockout signal
SET_L_LO	Set level lockout
SET_T_LO	Set temperature lockout
RESET_LO	Reset level and temperature lockout

13.15.4.2 SSIML OutputSignals

Table 334: Output signals for the function block SSIML (LM1-)

Signal	Description
LEVEL	Level service value
LVL_ALM	Level below alarm level
LVL_LO	Level below lockout level
TEMP	Temperature of the insulation medium
TEMP_ALM	Temperature above alarm level
TEMP_LO	Temperature above lockout level

13.15.5 Settings

13.15.5.1 SSIML Settings

Table 335: Basic parameter group settings for the function SSIML (LM1-)

Parameter	Range	Step	Default	Unit	Description
Operation	Off On	-	Off	-	Operation Off / On
LevelAlmLimit	0.00 - 25.00	0.01	5.00	-	Alarm setting for level
LevelLOLimit	0.00 - 25.00	0.01	3.00	-	Level lockout setting
TempAlarmLimit	-40.00 - 200.00	0.01	30.00	-	Temperature alarm level setting of the medium
TempLOLimit	-40.00 - 200.00	0.01	30.00	-	Temperature lockout level of the medium
tLevelAlarm	0.000 - 60.000	0.001	0.000	s	Time delay for level alarm
tLevelLockOut	0.000 - 60.000	0.001	0.000	s	Time delay for level lockout indication
tTempAlarm	0.000 - 60.000	0.001	0.000	s	Time delay for temperature alarm
tTempLockOut	0.000 - 60.000	0.001	0.000	s	Time delay for temperture lockout
tResetLevelAlm	0.000 - 60.000	0.001	0.000	s	Reset time delay for level alarm
tResetLevelLO	0.000 - 60.000	0.001	0.000	s	Reset time delay for level lockout
tResetTempLO	0.000 - 60.000	0.001	0.000	s	Reset time delay for temperture lockout
tResetTempAlm	0.000 - 60.000	0.001	0.000	s	Reset time delay for temperture alarm

13.15.6 Operation principle

Insulation liquid monitoring function SSIML (71) is used to monitor oil level in the circuit breaker. Two binary output signals are used from the circuit breaker to initiate alarm signals, level below alarm level and level below lockout level. If the input signal LVL_ALM is high, which indicate that the oil level in the circuit breaker is below alarm level, the output signal LVL_ALM, level below alarm level, will be initiated after a set time delay and indicate that maintenance of the circuit breaker is required. Similarly, if the input signal LVL_LO is high, which indicate oil level in the circuit breaker is below lockout level, the output signal LVL_LO, will be initiated after a time delay. The two time delay settings, *tLevelAlarm* and *tLevelLockOut*, are included in order not to initiate any alarm for short sudden changes in the oil level. If the oil level in the circuit breaker goes below the levels for more than the set time delays the corresponding signals, LVL_ALM, level below alarm level and LVL_LO, level below lockout level alarm will be obtained.

The input signal BLK_ALM is used to block the two alarms and the input signal BLOCK to block both alarms and the function.

13.15.7 Technical data

Table 336: SSIML(71) Technical data

Function	Range or value	Accuracy
Alarm, oil level	0.00-25.00	-
Oil level lockout	0.00-25.00	-
Temperature alarm	-40.00-200.00	-
Temperature lockout	-40.00-200.00	-
Timers	(0.000-60.000) s	± 0.5% ± 110 ms

13.16 Circuit breaker condition monitoring SSCBR

13.16.1 Identification

Function description	IEC 61850 identification	IEC 60617 identification	ANSI/IEEE C37.2 device number
Circuit breaker condition monitoring	SSCBR	-	-

13.16.2 Functionality

The circuit breaker condition monitoring function SSCBR is used to monitor different parameters of the circuit breaker. The breaker requires maintenance when the number of operations has reached a predefined value. For proper functioning of the circuit breaker, it is essential to monitor the circuit breaker operation, spring charge indication, breaker wear, travel time, number of operation cycles and accumulated energy. The energy is calculated from the measured input currents as a sum of I^2 t values. Alarms are generated when the calculated values exceed the threshold settings.

The function contains a blocking functionality. It is possible to block the function outputs, if desired.

13.16.3 Function block

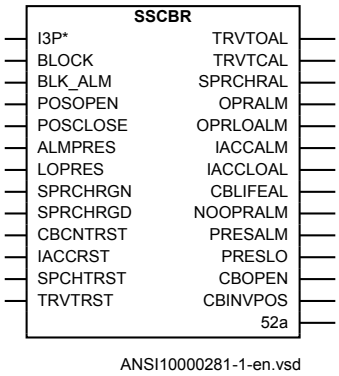

Figure 158: SSCBR function block

13.16.4 Signals

Table 337: SSCBR Input signals

Name	Type	Default	Description
I3P	GROUP SIGNAL	-	Three phase group signal for current inputs
BLOCK	BOOLEAN	0	Block of function
BLK_ALM	BOOLEAN	0	Block all the alarms
POSOPEN	BOOLEAN	0	Signal for open position of apparatus from I/O
POSCLOSE	BOOLEAN	0	Signal for close position of apparatus from I/O
ALMPRES	BOOLEAN	0	Binary pressure alarm input
LOPRES	BOOLEAN	0	Binary pressure input for lockout indication

Table continues on next page

Name	Type	Default	Description
SPRCHRGN	BOOLEAN	0	CB spring charging started input
SPRCHRGD	BOOLEAN	0	CB spring charged input
CBCNTRST	BOOLEAN	0	Reset input for CB remaining life and operation counter
IACCRST	BOOLEAN	0	Reset accumulated currents power
SPCHTRST	BOOLEAN	0	Reset spring charge time
TRVTRST	BOOLEAN	0	Reset travel time

Table 338: SSCBR Output signals

Name	Type	Description
TRVTOAL	BOOLEAN	CB open travel time exceeded set value
TRVTCAL	BOOLEAN	CB close travel time exceeded set value
SPRCHRAL	BOOLEAN	Spring charging time has crossed the set value
OPRALM	BOOLEAN	Number of CB operations exceeds alarm limit
OPRLOALM	BOOLEAN	Number of CB operations exceeds lockout limit
IACCALM	BOOLEAN	Accumulated currents power (Iyt),exceeded alarm limit
IACCLOAL	BOOLEAN	Accumulated currents power (Iyt),exceeded lockout limit
CBLIFEAL	BOOLEAN	Remaining life of CB exceeded alarm limit
NOOPRALM	BOOLEAN	CB 'not operated for long time' alarm
PRESALM	BOOLEAN	Pressure below alarm level
PRESLO	BOOLEAN	Pressure below lockout level
CBOPEN	BOOLEAN	CB is in open position
CBINVPOS	BOOLEAN	CB is in intermediate position
52a	BOOLEAN	CB is in closed position

13.16.5 Settings

Table 339: SSCBR Non group settings (basic)

Name	Values (Range)	Unit	Step	Default	Description
Operation	Disabled Enabled	-	-	Enabled	Disable/Enable Operation
AccDisLevel	5.00 - 500.00	A	0.01	10.00	RMS current setting below which energy accumulation stops
CurrExp	0.00 - 2.00	-	0.01	2.00	Current exponent setting for energy calculation
RatedFaultCurr	500.00 - 75000.00	A	0.01	5000.00	Rated fault current of the breaker
RatedOpCurr	100.00 - 5000.00	A	0.01	1000.00	Rated operating current of the breaker

Table continues on next page

Name	Values (Range)	Unit	Step	Default	Description
AccCurrAlmLvl	0.00 - 20000.00	-	0.01	2500.00	Setting of alarm level for accumulated currents power
AccCurrLO	0.00 - 20000.00	-	0.01	2500.00	Lockout limit setting for accumulated currents power
DirCoef	-3.00 - -0.50	-	0.01	-1.50	Directional coefficient for CB life calculation
LifeAlmLevel	0 - 99999	-	1	5000	Alarm level for CB remaining life
OpNumRatCurr	1 - 99999	-	1	10000	Number of operations possible at rated current
OpNumFaultCurr	1 - 10000	-	1	1000	Number of operations possible at rated fault current
OpNumAlm	0 - 9999	-	1	200	Alarm limit for number of operations
OpNumLO	0 - 9999	-	1	300	Lockout limit for number of operations
tOpenAlm	0 - 200	ms	1	40	Alarm level setting for open travel time
tCloseAlm	0 - 200	ms	1	40	Alarm level setting for close travel time
OpenTimeCorr	0 - 100	ms	1	10	Correction factor for open travel time
CloseTimeCorr	0 - 100	ms	1	10	Correction factor for CB close travel time
DifTimeCorr	-10 - 10	ms	1	5	Correction factor for time difference in auxiliary and main contacts open time
tSprngChrgAlm	0.00 - 60.00	s	0.01	1.00	Setting of alarm for spring charging time
tPressAlm	0.00 - 60.00	s	0.01	0.10	Time delay for gas pressure alarm
TPressLO	0.00 - 60.00	s	0.01	0.10	Time delay for gas pressure lockout
AccEnerInitVal	0.00 - 9999.99	-	0.01	0.00	Accumulation energy initial value
CountInitVal	0 - 9999	-	1	0	Operation numbers counter initialization value
CBRemLife	0 - 9999	-	1	5000	Initial value for the CB remaining life estimates
InactDayAlm	0 - 9999	Day	1	2000	Alarm limit value of the inactive days counter
InactDayInit	0 - 9999	Day	1	0	Initial value of the inactive days counter
InactHourAlm	0 - 23	Hour	1	0	Alarm time of the inactive days counter in hours

13.16.6 Monitored data

Table 340: SSCBR Monitored data

Name	Type	Values (Range)	Unit	Description
CBOTRVT	REAL	-	ms	Travel time of the CB during opening operation
CBCLTRVT	REAL	-	ms	Travel time of the CB during closing operation
SPRCHRT	REAL	-	s	The charging time of the CB spring
NO_OPR	INTEGER	-	-	Number of CB operation cycle

Table continues on next page

Name	Type	Values (Range)	Unit	Description
NOOPRDAY	INTEGER	-	-	The number of days CB has been inactive
CBLIFE_A	INTEGER	-	-	CB Remaining life phase A
CBLIFE_B	INTEGER	-	-	CB Remaining life phase B
CBLIFE_C	INTEGER	-	-	CB Remaining life phase C
IACC_A	REAL	-	-	Accumulated currents power (Iyt), phase A
IACC_B	REAL	-	-	Accumulated currents power (Iyt), phase B
IACC_C	REAL	-	-	Accumulated currents power (Iyt), phase C

13.16.7 Operation principle

The circuit breaker condition monitoring function includes a number of metering and monitoring subfunctions. The functions can be enabled and disabled with the *Operation* setting. The corresponding parameter values are Enable and Disable. The operation counters are cleared when *Operation* is set to *Disabled*.

The operation of the functions can be described by using a module diagram. All the modules in the diagram are explained in the next sections.

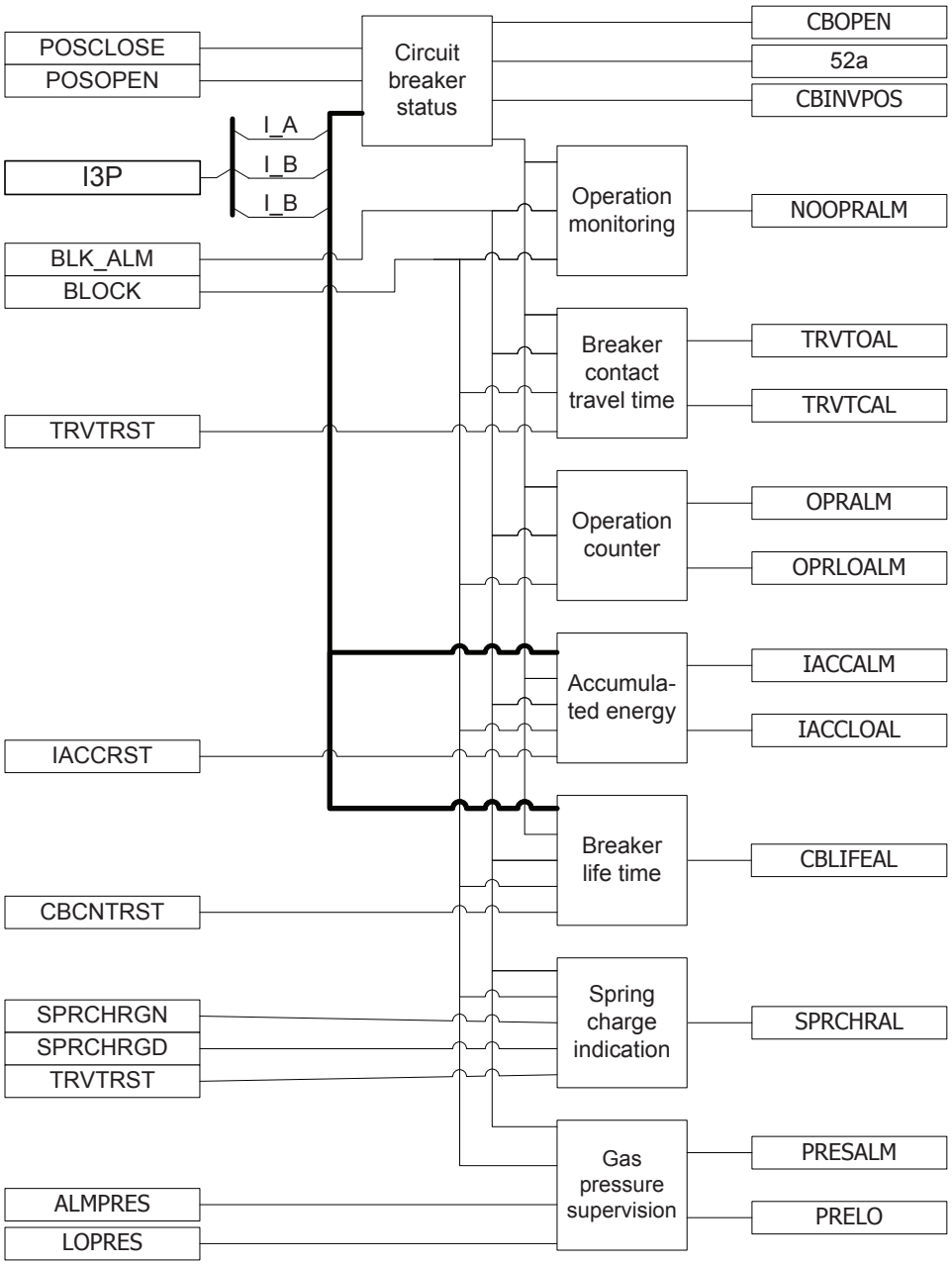

Figure 159: Functional module diagram

13.16.7.1 Circuit breaker status

The circuit breaker status subfunction monitors the position of the circuit breaker, that is, whether the breaker is in an open, closed or intermediate position. The operation of

the breaker status monitoring can be described by using a module diagram. All the modules in the diagram are explained in the next sections.

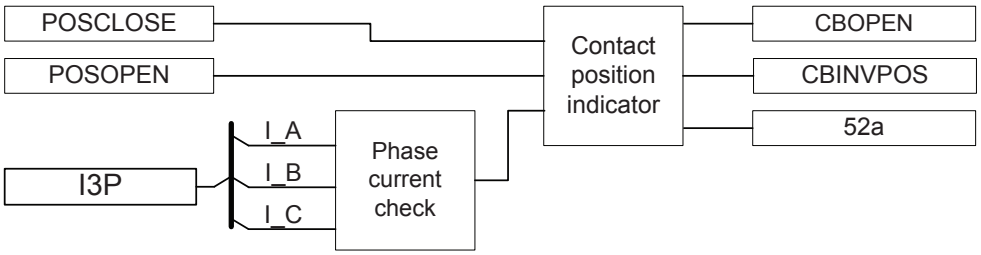

Figure 160: Functional module diagram for monitoring circuit breaker status BLOCK and BLK_ALM inputs

Phase current check

This module compares the three phase currents with the setting *AccDisLevel*. If the current in a phase exceeds the set level, information about phase is reported to the contact position indicator module.

Contact position indicator

The circuit breaker status is open if the auxiliary input contact `POSCLOSE` is low, the `POSOPEN` input is high and the current is zero. The circuit breaker is closed when the `POSOPEN` input is low and the `POSCLOSE` input is high. The breaker is in the intermediate position if both the auxiliary contacts have the same value, that is, both are in the logical level "0" or "1", or if the auxiliary input contact `POSCLOSE` is low and the `POSOPEN` input is high, but the current is not zero.

The status of the breaker is indicated with the binary outputs `CBOPEN`, `CBINVPOS` and `52a` for open, intermediate and closed position respectively.

13.16.7.2 Circuit breaker operation monitoring

The purpose of the circuit breaker operation monitoring subfunction is to indicate if the circuit breaker has not been operated for a long time.

The operation of the circuit breaker operation monitoring can be described by using a module diagram. All the modules in the diagram are explained in the next sections.

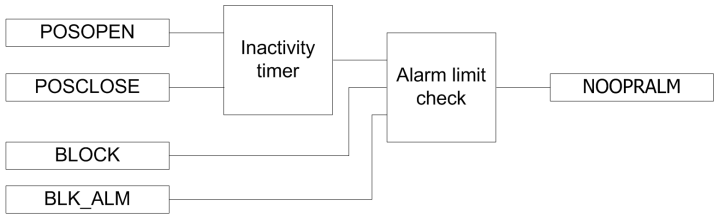

Figure 161: Functional module diagram for calculating inactive days and alarm for circuit breaker operation monitoring

Inactivity timer

The module calculates the number of days the circuit breaker has remained inactive, that is, has stayed in the same open or closed state. The calculation is done by monitoring the states of the POSOPEN and POSCLOSE auxiliary contacts.

The inactive days NOOPRDAY is available through the Monitored data view. It is also possible to set the initial inactive days by using the *InactDayInit* parameter.

Alarm limit check

When the inactive days exceed the limit value defined with the *InactDayAlm* setting, the NOOPRALM alarm is initiated. The time in hours at which this alarm is activated can be set with the *InactHourAlm* parameter as coordinates of UTC. The alarm signal NOOPRALM can be blocked by activating the binary input BLOCK.

13.16.7.3 Breaker contact travel time

The breaker contact travel time module calculates the breaker contact travel time for the closing and opening operation. The operation of the breaker contact travel time measurement can be described by using a module diagram. All the modules in the diagram are explained in the next sections.

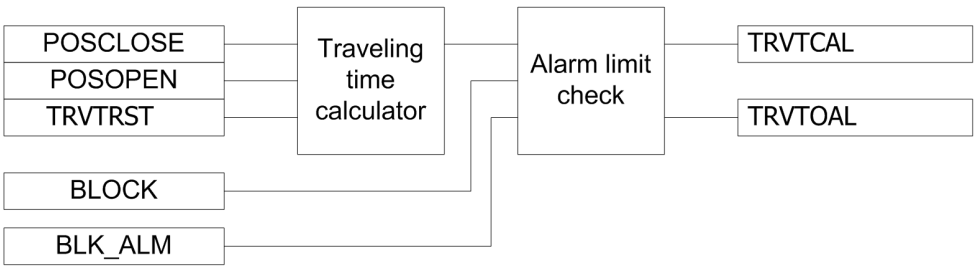

Figure 162: Functional module diagram for breaker contact travel time

Traveling time calculator

The contact travel time of the breaker is calculated from the time between auxiliary contacts' state change. The open travel time is measured between the opening of the POSCLOSE auxiliary contact and the closing of the POSOPEN auxiliary contact. Travel time is also measured between the opening of the POSOPEN auxiliary contact and the closing of the POSCLOSE auxiliary contact.

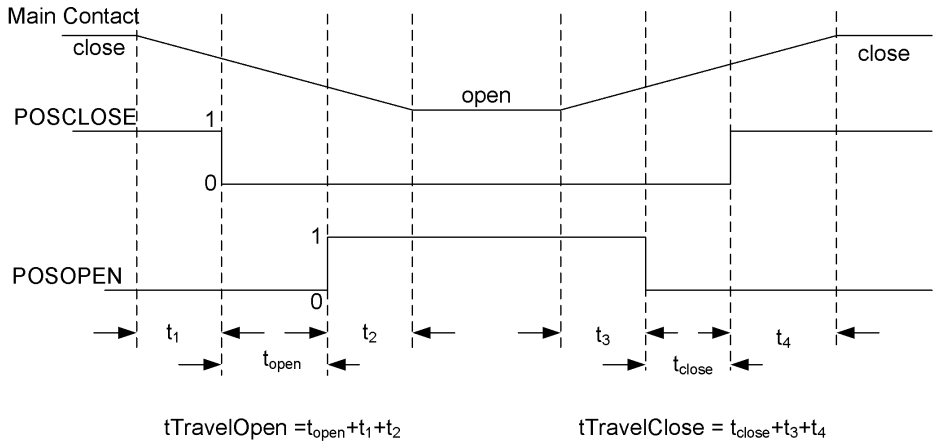

There is a time difference t_1 between the start of the main contact opening and the opening of the POSCLOSE auxiliary contact. Similarly, there is a time gap t_2 between the time when the POSOPEN auxiliary contact opens and the main contact is completely open. Therefore, in order to incorporate the time t_1+t_2, a correction factor needs to be added with 10 to get the actual opening time. This factor is added with the *OpenTimeCorr* ($=t_1+t_2$). The closing time is calculated by adding the value set with the *CloseTimeCorr* (t_3+t_4) setting to the measured closing time.

The last measured opening travel time tTravelOpen and the closing travel time tTravelClose are available through the Monitored data view on the LHMI or through tools via communications.

Alarm limit check

When the measured open travel time is longer than the value set with the *tOpenAlm* setting, the TRVTOAL output is activated. Respectively, when the measured close travel time is longer than the value set with the *tCloseAlm* setting, the TRVTCAL output is activated.

It is also possible to block the TRVTCAL and TRVTOAL alarm signals by activating the BLOCK input.

13.16.7.4 Operation counter

The operation counter subfunction calculates the number of breaker operation cycles. Both open and close operations are included in one operation cycle. The operation counter value is updated after each open operation.

The operation of the subfunction can be described by using a module diagram. All the modules in the diagram are explained in the next sections.

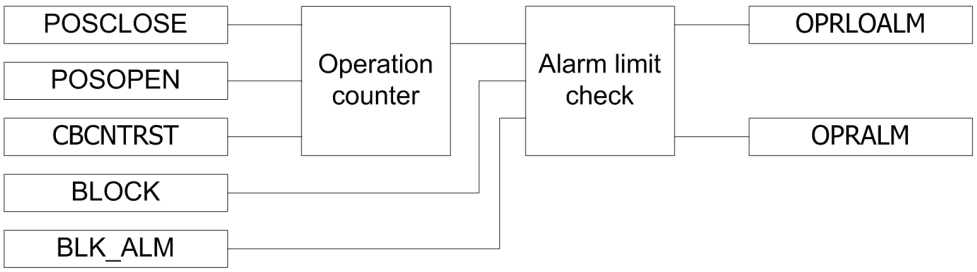

Figure 163: Functional module diagram for counting circuit breaker operations

Operation counter

The operation counter counts the number of operations based on the state change of the binary auxiliary contacts inputs POSCLOSE and POSOPEN.

The number of operations NO_OPR is available through the Monitored data view on the LHMI or through tools via communications. The old circuit breaker operation counter value can be taken into use by writing the value to the *CountInitVal* parameter and can be reset by *Clear CB wear* in the clear menu from LHMI.

Alarm limit check

The OPRALM operation alarm is generated when the number of operations exceeds the value set with the *OpNumAlm* threshold setting. However, if the number of operations increases further and exceeds the limit value set with the *OpNumLO* setting, the OPRLOALM output is activated.

The binary outputs OPRLOALM and OPRALM are deactivated when the BLOCK input is activated.

13.16.7.5 Accumulation of I^yt

Accumulation of the I^yt module calculates the accumulated energy.

The operation of the module can be described by using a module diagram. All the modules in the diagram are explained in the next sections.

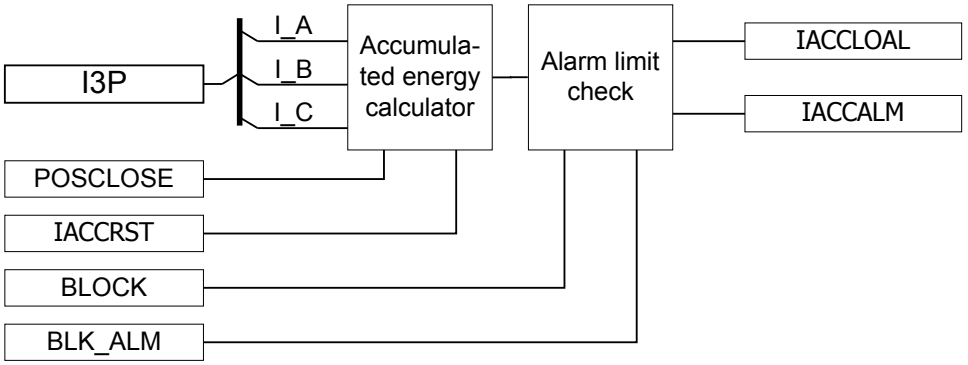

Figure 164: Functional module diagram for calculating accumulative energy and alarm

Accumulated energy calculator

This module calculates the accumulated energy I^yt [(kA)^{y}s]. The factor y is set with the *CurrExp* setting.

The calculation is initiated with the `POSCLOSE` input open events. It ends when the RMS current becomes lower than the *AccDisLevel* setting value.

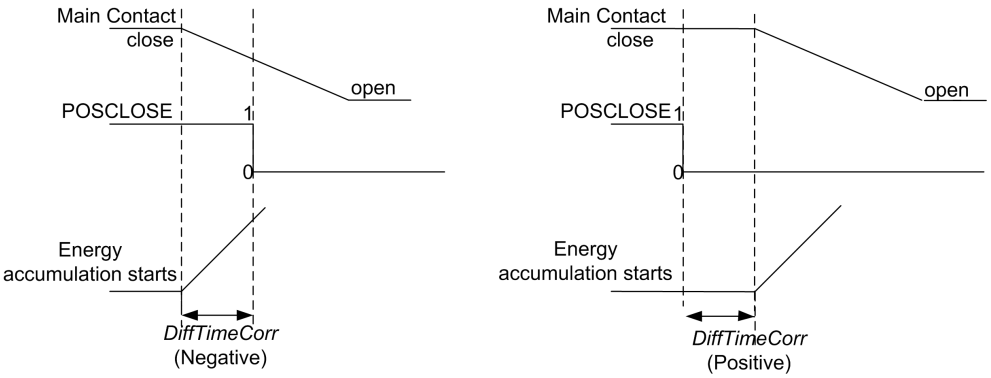

Figure 165: Significance of theDiffTimeCorr setting

The *DiffTimeCorr* setting is used instead of the auxiliary contact to accumulate the energy from the time the main contact opens. If the setting is positive, the calculation of energy starts after the auxiliary contact has opened and when the delay is equal to the value set with the *DiffTimeCorr* setting. When the setting is negative, the calculation starts in advance by the correction time before the auxiliary contact opens.

The accumulated energy outputs `IACC_A (_B, _C)` are available through the Monitored data view on the LHMI or through tools via communications. The values

can be reset by setting the *Clear accum. breaking curr* setting to true in the clear menu from LHMI.

Alarm limit check

The IACCALM alarm is activated when the accumulated energy exceeds the value set with the *AccCurrAlmLvl* threshold setting. However, when the energy exceeds the limit value set with the *AccCurrLO* threshold setting, the IACCLOAL output is activated.

The IACCALM and IACCLOAL outputs can be blocked by activating the binary input BLOCK.

13.16.7.6 Remaining life of the circuit breaker

Every time the breaker operates, the life of the circuit breaker reduces due to wearing. The wearing in the breaker depends on the tripping current, and the remaining life of the breaker is estimated from the circuit breaker trip curve provided by the manufacturer. The remaining life is decremented at least with one when the circuit breaker is opened.

The operation of the remaining life of the circuit breaker subfunction can be described by using a module diagram. All the modules in the diagram are explained in the next sections.

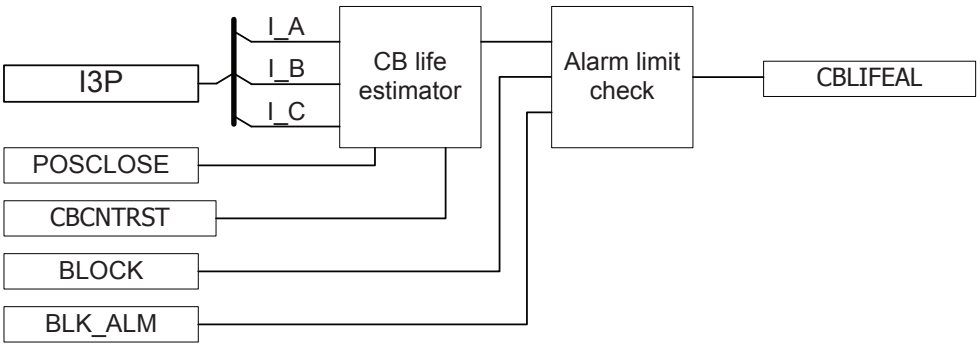

Figure 166: Functional module diagram for estimating the life of the circuit breaker

Circuit breaker life estimator

The circuit breaker life estimator module calculates the remaining life of the circuit breaker. If the tripping current is less than the rated operating current set with the *RatedOpCurr* setting, the remaining operation of the breaker reduces by one operation. If the tripping current is more than the rated fault current set with the *RatedFaultCurr* setting, the possible operations are zero. The remaining life due to the tripping current in between these two values is calculated based on the trip curve given by the manufacturer. The *OpNumRatCurr* and *OPNumFaultCurr* parameters set the number

of operations the breaker can perform at the rated current and at the rated fault current, respectively.

The remaining life is calculated separately for all three phases and it is available as a monitored data value CBLIFE_A (_B, _C). The values can be cleared by setting the parameter *CB wear values* in the clear menu from LHMI.

Clearing *CB wear values* also resets the operation counter.

Alarm limit check

When the remaining life of any phase drops below the *LifeAlmLevel* threshold setting, the corresponding circuit breaker life alarm CBLIFEAL is activated.

It is possible to deactivate the CBLIFEAL alarm signal by activating the binary input BLOCK. The old circuit breaker operation counter value can be taken into use by writing the value to the *Initial CB Rmn life* parameter and resetting the value via the clear menu from LHMI.

It is possible to deactivate the CBLIFEAL alarm signal by activating the binary input BLOCK.

13.16.7.7 Circuit breaker spring charged indication

The circuit breaker spring charged indication subfunction calculates the spring charging time.

The operation of the subfunction can be described by using a module diagram. All the modules in the diagram are explained in the next sections.

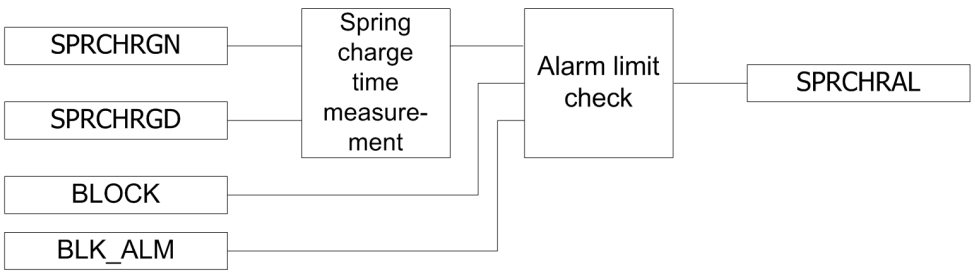

Figure 167: Functional module diagram for circuit breaker spring charged indication and alarm

Spring charge time measurement

Two binary inputs, SPRCHRGN and SPRCHRGD, indicate spring charging started and spring charged, respectively. The spring charging time is calculated from the difference of these two signal timings.

The spring charging time SPRCHRT is available through the Monitored data view .

Alarm limit check

If the time taken by the spring to charge is more than the value set with the *tSprngChrgAlm* setting, the subfunction generates the SPRCHRAL alarm.

It is possible to block the SPRCHRAL alarm signal by activating the BLOCK binary input.

13.16.7.8 Gas pressure supervision

The gas pressure supervision subfunction monitors the gas pressure inside the arc chamber.

The operation of the subfunction can be described by using a module diagram. All the modules in the diagram are explained in the next sections.

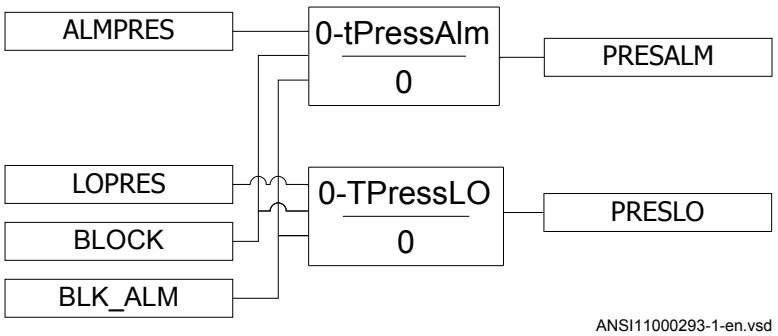

Figure 168: Functional module diagram for circuit breaker gas pressure alarm

The gas pressure is monitored through the binary input signals LOPRES and ALMPRES.

Pressure alarm time delay

When the ALMPRES binary input is activated, the PRESALM alarm is activated after a time delay set with the *tPressAlm* setting. The PRESALM alarm can be blocked by activating the BLOCK input.

If the pressure drops further to a very low level, the LOPRES binary input becomes high, activating the lockout alarm PRESLO after a time delay set with the *TPressLO* setting. The PRESLO alarm can be blocked by activating the BLOCK input.

The binary input BLOCK can be used to block the function. The activation of the BLOCK input deactivates all outputs and resets internal timers. The alarm signals from the function can be blocked by activating the binary input BLK_ALM.

13.16.8 Technical data

Table 341: SSCBR Technical data

Function	Range or value	Accuracy
Alarm levels for open and close travel time	(0-200) ms	± 0.5% ± 25 ms
Alarm levels for number of operations	(0 - 9999)	-
Setting of alarm for spring charging time	(0.00-60.00) s	± 0.5% ± 25 ms
Time delay for gas pressure alarm	(0.00-60.00) s	± 0.5% ± 25 ms
Time delay for gas pressure lockout	(0.00-60.00) s	± 0.5% ± 25 ms

13.17 Measurands for IEC 60870-5-103 I103MEAS

13.17.1 Functionality

103MEAS is a function block that reports all valid measuring types depending on connected signals.

The measurand reporting interval set for MMXU function blocks, using the *xDbRepInt* and *xAngDbRepInt* settings, must be coordinated with the event reporting interval set for the IEC 60870-5-103 communication using setting *CycMeasRepTime*.

CMMXU: 1					
Operation		Off			
GlobalBaseSel		1		1	6
ILDbRepInt		10	Type	1	300
ILZeroDb		500	m%	0	100000
ILHiHiLim		1200	A	0	500000
ILHiLim		1100	A	0	500000
ILLowLim		0	A	0	500000
ILLowLowLim		0	A	0	500000
ILMin		0	A	0	500000
ILMax		1300	A	0	500000
ILRepTyp		**Cyclic**			
ILLimHys		5,000	%	0,000	100,000
ILAngDbRepInt		10	Type	1	300
IAmpComp5		0,000	%	-10,000	10,000
IAmpComp30		0,000	%	-10,000	10,000
IAmpComp100		0,000	%	-10,000	10,000
IAngComp5		0,000	Deg	-10,000	10,000
IAngComp30		0,000	Deg	-10,000	10,000
IAngComp100		0,000	Deg	-10,000	10,000

Figure 169: Settings for CMMXU: 1

All input signals to IEC 60870-5-103 I103MEAS must be connected in application configuration. Connect an input signals on IEC 60870-5-103 I103MEAS that is not connected to the corresponding output on MMXU function, to outputs on the fixed signal function block.

13.17.2 Function block

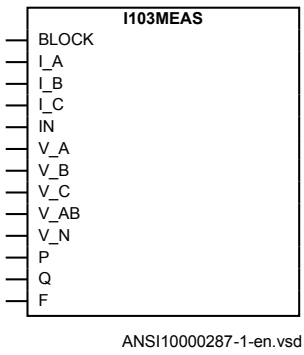

Figure 170: I103MEAS function block

13.17.3 Signals

Table 342: I103MEAS Input signals

Name	Type	Default	Description
BLOCK	BOOLEAN	0	Block of service value reporting
I_A	REAL	0.0	Service value for current phase A
I_B	REAL	0.0	Service value for current phase B
I_C	REAL	0.0	Service value for current phase C
IN	REAL	0.0	Service value for residual current IN
V_A	REAL	0.0	Service value for voltage phase A
V_B	REAL	0.0	Service value for voltage phase B
V_C	REAL	0.0	Service value for voltage phase C
V_AB	REAL	0.0	Service value for voltage phase-phase A-B
V_N	REAL	0.0	Service value for residual voltage VN
P	REAL	0.0	Service value for active power
Q	REAL	0.0	Service value for reactive power
F	REAL	0.0	Service value for system frequency

13.17.4 Settings

Table 343: I103MEAS Non group settings (basic)

Name	Values (Range)	Unit	Step	Default	Description
FunctionType	1 - 255	-	1	1	Function type (1-255)
MaxIa	1 - 99999	A	1	3000	Maximum current phase A
MaxIb	1 - 99999	A	1	3000	Maximum current phase B
MaxIc	1 - 99999	A	1	3000	Maximum current phase C
MaxIN	1 - 99999	A	1	3000	Maximum residual current IN
MaxVa	0.05 - 2000.00	kV	0.05	230.00	Maximum voltage for phase A
MaxVb	0.05 - 2000.00	kV	0.05	230.00	Maximum voltage for phase B
MaxVc	0.05 - 2000.00	kV	0.05	230.00	Maximum voltage for phase C
MaxVa-Vb	0.05 - 2000.00	kV	0.05	400.00	Maximum voltage for phase-phase A-B
MaxVn	0.05 - 2000.00	kV	0.05	230.00	Maximum residual voltage VN
MaxP	0.00 - 2000.00	MW	0.05	1200.00	Maximum value for active power
MaxQ	0.00 - 2000.00	MVA	0.05	1200.00	Maximum value for reactive power
MaxF	50.0 - 60.0	Hz	10.0	50.0	Maximum system frequency

13.18 Measurands user defined signals for IEC 60870-5-103 I103MEASUSR

13.18.1 Functionality

I103MEASUSR is a function block with user defined input measurands in monitor direction. These function blocks include the *FunctionType* parameter for each block in the private range, and the Information number parameter for each block.

13.18.2 Function block

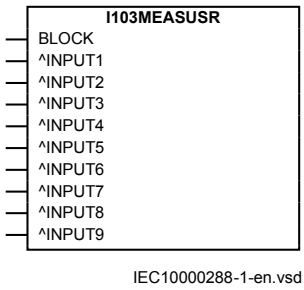

Figure 171: I103MEASUSR function block

13.18.3 Signals

Table 344: I103MEASUSR Input signals

Name	Type	Default	Description
BLOCK	BOOLEAN	0	Block of service value reporting
INPUT1	REAL	0.0	Service value for measurement on input 1
INPUT2	REAL	0.0	Service value for measurement on input 2
INPUT3	REAL	0.0	Service value for measurement on input 3
INPUT4	REAL	0.0	Service value for measurement on input 4
INPUT5	REAL	0.0	Service value for measurement on input 5
INPUT6	REAL	0.0	Service value for measurement on input 6
INPUT7	REAL	0.0	Service value for measurement on input 7
INPUT8	REAL	0.0	Service value for measurement on input 8
INPUT9	REAL	0.0	Service value for measurement on input 9

13.18.4 Settings

Table 345: I103MEASUSR Non group settings (basic)

Name	Values (Range)	Unit	Step	Default	Description
FunctionType	1 - 255	-	1	25	Function type (1-255)
InfNo	1 - 255	-	1	1	Information number for measurands (1-255)
MaxMeasur1	0.05 - 10000000000.00	-	0.05	1000.00	Maximum value for measurement on input 1
MaxMeasur2	0.05 - 10000000000.00	-	0.05	1000.00	Maximum value for measurement on input 2
MaxMeasur3	0.05 - 10000000000.00	-	0.05	1000.00	Maximum value for measurement on input 3
MaxMeasur4	0.05 - 10000000000.00	-	0.05	1000.00	Maximum value for measurement on input 4
MaxMeasur5	0.05 - 10000000000.00	-	0.05	1000.00	Maximum value for measurement on input 5
MaxMeasur6	0.05 - 10000000000.00	-	0.05	1000.00	Maximum value for measurement on input 6
MaxMeasur7	0.05 - 10000000000.00	-	0.05	1000.00	Maximum value for measurement on input 7
MaxMeasur8	0.05 - 10000000000.00	-	0.05	1000.00	Maximum value for measurement on input 8
MaxMeasur9	0.05 - 10000000000.00	-	0.05	1000.00	Maximum value for measurement on input 9

13.19 Function status auto-recloser for IEC 60870-5-103 I103AR

13.19.1 Functionality

I103AR is a function block with defined functions for autorecloser indications in monitor direction. This block includes the *FunctionType* parameter, and the information number parameter is defined for each output signal.

13.19.2 Function block

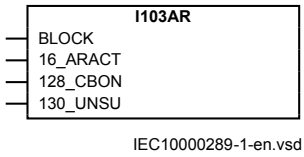

Figure 172: I103AR function block

13.19.3 Signals

Table 346: I103AR Input signals

Name	Type	Default	Description
BLOCK	BOOLEAN	0	Block of status reporting
16_ARACT	BOOLEAN	0	Information number 16, auto-recloser active
128_CBON	BOOLEAN	0	Information number 128, circuit breaker on by auto-recloser
130_UNSU	BOOLEAN	0	Information number 130, unsuccessful reclosing

13.19.4 Settings

Table 347: I103AR Non group settings (basic)

Name	Values (Range)	Unit	Step	Default	Description
FunctionType	1 - 255	-	1	1	Function type (1-255)

13.20 Function status ground-fault for IEC 60870-5-103 I103EF

13.20.1 Functionality

I103EF is a function block with defined functions for ground fault indications in monitor direction. This block includes the *FunctionType* parameter, and the information number parameter is defined for each output signal.

13.20.2 Function block

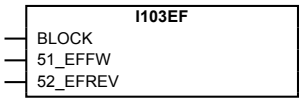

Figure 173: I103EF function block

13.20.3 Signals

Table 348: I103EF Input signals

Name	Type	Default	Description
BLOCK	BOOLEAN	0	Block of status reporting
51_EFFW	BOOLEAN	0	Information number 51, ground-fault forward
52_EFREV	BOOLEAN	0	Information number 52, ground-fault reverse

13.20.4 Settings

Table 349: I103EF Non group settings (basic)

Name	Values (Range)	Unit	Step	Default	Description
FunctionType	1 - 255	-	1	160	Function type (1-255)

13.21 Function status fault protection for IEC 60870-5-103 I103FLTPROT

13.21.1 Functionality

I103FLTPROT is used for fault indications in monitor direction. Each input on the function block is specific for a certain fault type and therefore must be connected to a correspondent signal present in the configuration. For example: 68_TRGEN represents the General Trip of the device, and therefore must be connected to the general trip signal SMPPTRC_TRIP or equivalent.

The delay observed in the protocol is the time difference in between the signal that is triggering the Disturbance Recorder and the respective configured signal to the IEC 60870-5-103 I103FLTPROT.

13.21.2 Function block

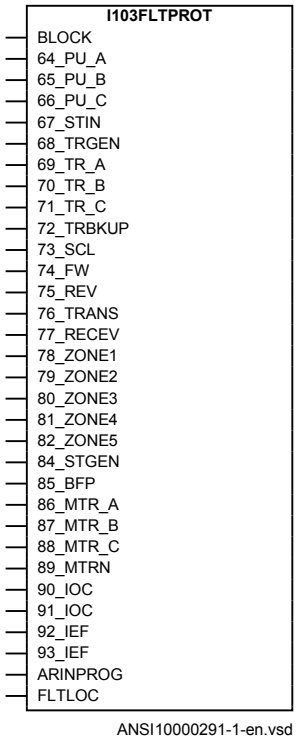

Figure 174: I103FLTPROT function block

13.21.3 Signals

Table 350: I103FLTPROT Input signals

Name	Type	Default	Description
BLOCK	BOOLEAN	0	Block of status reporting.
64_PU_A	BOOLEAN	0	Information number 64, start phase A
65_PU_B	BOOLEAN	0	Information number 65, start phase B
66_PU_C	BOOLEAN	0	Information number 66, start phase C
67_STIN	BOOLEAN	0	Information number 67, start residual current IN
68_TRGEN	BOOLEAN	0	Information number 68, trip general
69_TR_A	BOOLEAN	0	Information number 69, trip phase A
70_TR_B	BOOLEAN	0	Information number 70, trip phase B
71_TR_C	BOOLEAN	0	Information number 71, trip phase C
72_TRBKUP	BOOLEAN	0	Information number 72, back up trip I>>
Table continues on next page			

Name	Type	Default	Description
73_SCL	REAL	0	Information number 73, fault location in ohm
74_FW	BOOLEAN	0	Information number 74, forward/line
75_REV	BOOLEAN	0	Information number 75, reverse/busbar
76_TRANS	BOOLEAN	0	Information number 76, signal transmitted
77_RECEV	BOOLEAN	0	Information number 77, signal received
78_ZONE1	BOOLEAN	0	Information number 78, zone 1
79_ZONE2	BOOLEAN	0	Information number 79, zone 2
80_ZONE3	BOOLEAN	0	Information number 80, zone 3
81_ZONE4	BOOLEAN	0	Information number 81, zone 4
82_ZONE5	BOOLEAN	0	Information number 82, zone 5
84_STGEN	BOOLEAN	0	Information number 84, start general
85_BFP	BOOLEAN	0	Information number 85, breaker failure
86_MTR_A	BOOLEAN	0	Information number 86, trip measuring system phase A
87_MTR_B	BOOLEAN	0	Information number 87, trip measuring system phase B
88_MTR_C	BOOLEAN	0	Information number 88, trip measuring system phase C
89_MTRN	BOOLEAN	0	Information number 89, trip measuring system neutral N
90_IOC	BOOLEAN	0	Information number 90, over current trip, stage low
91_IOC	BOOLEAN	0	Information number 91, over current trip, stage high
92_IEF	BOOLEAN	0	Information number 92, ground-fault trip, stage low
93_IEF	BOOLEAN	0	Information number 93, ground-fault trip, stage high
ARINPROG	BOOLEAN	0	Autorecloser in progress (SMBRREC- INPROGR)
FLTLOC	BOOLEAN	0	Faultlocator faultlocation valid (LMBRFLO-CALCMADE)

13.21.4 Settings

Table 351: I103FLTPROT Non group settings (basic)

Name	Values (Range)	Unit	Step	Default	Description
FunctionType	1 - 255	-	1	128	Function type (1-255)

13.22 IED status for IEC 60870-5-103 I103IED

13.22.1 Functionality

I103IED is a function block with defined IED functions in monitor direction. This block uses parameter as *FunctionType*, and information number parameter is defined for each input signal.

13.22.2 Function block

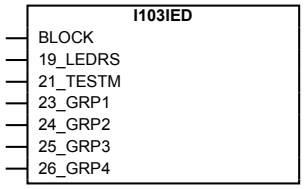

Figure 175: I103IED function block

13.22.3 Signals

Table 352: I103IED Input signals

Name	Type	Default	Description
BLOCK	BOOLEAN	0	Block of status reporting
19_LEDRS	BOOLEAN	0	Information number 19, reset LEDs
21_TESTM	BOOLEAN	0	Information number 21, test mode is active
23_GRP1	BOOLEAN	0	Information number 23, setting group 1 is active
24_GRP2	BOOLEAN	0	Information number 24, setting group 2 is active
25_GRP3	BOOLEAN	0	Information number 25, setting group 3 is active
26_GRP4	BOOLEAN	0	Information number 26, setting group 4 is active

13.22.4 Settings

Table 353: I103IED Non group settings (basic)

Name	Values (Range)	Unit	Step	Default	Description
FunctionType	1 - 255	-	1	1	Function type (1-255)

13.23 Supervison status for IEC 60870-5-103 I103SUPERV

13.23.1 Functionality

I103SUPERV is a function block with defined functions for supervision indications in monitor direction. This block includes the *FunctionType* parameter, and the information number parameter is defined for each output signal.

13.23.2 Function block

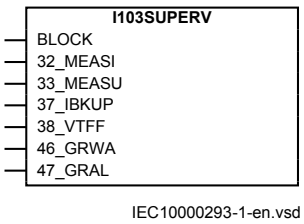

Figure 176: I103SUPERV function block

13.23.3 Signals

Table 354: I103SUPERV Input signals

Name	Type	Default	Description
BLOCK	BOOLEAN	0	Block of status reporting
32_MEASI	BOOLEAN	0	Information number 32, measurand supervision of I
33_MEASU	BOOLEAN	0	Information number 33, measurand supervision of U
37_IBKUP	BOOLEAN	0	Information number 37, I high-high back-up protection
38_VTFF	BOOLEAN	0	Information number 38, fuse failure VT
46_GRWA	BOOLEAN	0	Information number 46, group warning
47_GRAL	BOOLEAN	0	Information number 47, group alarm

13.23.4 Settings

Table 355: I103SUPERV Non group settings (basic)

Name	Values (Range)	Unit	Step	Default	Description
FunctionType	1 - 255	-	1	1	Function type (1-255)

13.24 Status for user defined signals for IEC 60870-5-103 I103USRDEF

13.24.1 Functionality

I103USRDEF is a function blocks with user defined input signals in monitor direction. These function blocks include the *FunctionType* parameter for each block in the private range, and the information number parameter for each input signal.

I103USRDEF can be used, for example in mapping the INF numbers not supported directly by specific function blocks, like: INF17, INF18, INF20 or INF35. After connecting the appropriate signals to the I103USRDEF inputs, the user must also set the *InfNo_x* values in the settings.

I103USRDEF: 1					
FunctionType		5		1	255
NAME1		INPUT1			13 character(s
InfNo_1		**17**		1	255
NAME2		INPUT2			13 character(s
InfNo_2		**18**		1	255
NAME3		INPUT3			13 character(s
InfNo_3		**20**		1	255
NAME4		INPUT4			13 character(s
InfNo_4		**35**		1	255

Figure 177: IEC 60870-5-103I103USRDEF:1

13.24.2 Function block

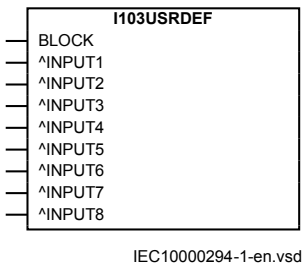

Figure 178: I103USRDEF function block

13.24.3 Signals

Table 356: I103USRDEF Input signals

Name	Type	Default	Description
BLOCK	BOOLEAN	0	Block of status reporting
INPUT1	BOOLEAN	0	Binary signal Input 1
INPUT2	BOOLEAN	0	Binary signal input 2
INPUT3	BOOLEAN	0	Binary signal input 3
INPUT4	BOOLEAN	0	Binary signal input 4
INPUT5	BOOLEAN	0	Binary signal input 5
INPUT6	BOOLEAN	0	Binary signal input 6
INPUT7	BOOLEAN	0	Binary signal input 7
INPUT8	BOOLEAN	0	Binary signal input 8

13.24.4 Settings

Table 357: I103USRDEF Non group settings (basic)

Name	Values (Range)	Unit	Step	Default	Description
FunctionType	1 - 255	-	1	5	Function type (1-255)
InfNo_1	1 - 255	-	1	1	Information number for binary input 1 (1-255)
InfNo_2	1 - 255	-	1	2	Information number for binary input 2 (1-255)
InfNo_3	1 - 255	-	1	3	Information number for binary input 3 (1-255)
InfNo_4	1 - 255	-	1	4	Information number for binary input 4 (1-255)
InfNo_5	1 - 255	-	1	5	Information number for binary input 5 (1-255)
InfNo_6	1 - 255	-	1	6	Information number for binary input 6 (1-255)
InfNo_7	1 - 255	-	1	7	Information number for binary input 7 (1-255)
InfNo_8	1 - 255	-	1	8	Information number for binary input 8 (1-255)

Section 14 Metering

14.1 Pulse counter PCGGIO

14.1.1 Identification

Function description	IEC 61850 identification	IEC 60617 identification	ANSI/IEEE C37.2 device number
Pulse counter	PCGGIO	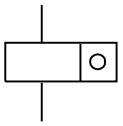	-

14.1.2 Functionality

Pulse counter (PCGGIO) function counts externally generated binary pulses, for instance pulses coming from an external energy meter, for calculation of energy consumption values. The pulses are captured by the BIO (binary input/output) module and then read by the PCGGIO function. A scaled service value is available over the station bus.

14.1.3 Function block

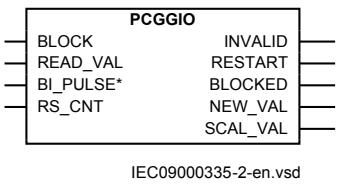

Figure 179: PCGGIO function block

14.1.4 Signals

Table 358: PCGGIO Input signals

Name	Type	Default	Description
BLOCK	BOOLEAN	0	Block of function
READ_VAL	BOOLEAN	0	Initiates an additional pulse counter reading
BI_PULSE	BOOLEAN	0	Connect binary input channel for metering
RS_CNT	BOOLEAN	0	Resets pulse counter value

Table 359: PCGGIO Output signals

Name	Type	Description
INVALID	BOOLEAN	The pulse counter value is invalid
RESTART	BOOLEAN	The reported value does not comprise a complete integration cycle
BLOCKED	BOOLEAN	The pulse counter function is blocked
NEW_VAL	BOOLEAN	A new pulse counter value is generated
SCAL_VAL	REAL	Scaled value with time and status information

14.1.5 Settings

Table 360: PCGGIO Non group settings (basic)

Name	Values (Range)	Unit	Step	Default	Description
Operation	Off On	-	-	Off	Operation Off/On
EventMask	NoEvents ReportEvents	-	-	NoEvents	Report mask for analog events from pulse counter
CountCriteria	Off RisingEdge Falling edge OnChange	-	-	RisingEdge	Pulse counter criteria
Scale	1.000 - 90000.000	-	0.001	1.000	Scaling value for SCAL_VAL output to unit per counted value
Quantity	Count ActivePower ApparentPower ReactivePower ActiveEnergy ApparentEnergy ReactiveEnergy	-	-	Count	Measured quantity for SCAL_VAL output
tReporting	1 - 3600	s	1	60	Cycle time for reporting of counter value

14.1.6 Monitored data

Table 361: PCGGIO Monitored data

Name	Type	Values (Range)	Unit	Description
CNT_VAL	INTEGER	-	-	Actual pulse counter value
SCAL_VAL	REAL	-	-	Scaled value with time and status information

14.1.7 Operation principle

The registration of pulses is done according to setting of *CountCriteria* parameter on one of the 9 binary input channels located on the BIO module. Pulse counter values are sent to the station HMI with predefined cyclicity without reset.

The reporting time period can be set in the range from 1 second to 60 minutes and is synchronized with absolute system time. Interrogation of additional pulse counter values can be done with a command (intermediate reading) for a single counter. All active counters can also be read by IEC 61850.

Pulse counter (PCGGIO) function in the IED supports unidirectional incremental counters. That means only positive values are possible. The counter uses a 32 bit format, that is, the reported value is a 32-bit, signed integer with a range 0...+2147483647. The counter value is stored in semiretain memory.

The reported value to station HMI over the station bus contains Identity, Scaled Value (pulse count x scale), Time, and Pulse Counter Quality. The Pulse Counter Quality consists of:

- Invalid (board hardware error or configuration error)
- Wrapped around
- Blocked
- Adjusted

The transmission of the counter value can be done as a service value, that is, the value frozen in the last integration cycle is read by the station HMI from the database. PCGGIO updates the value in the database when an integration cycle is finished and activates the NEW_VAL signal in the function block. This signal can be time tagged, and transmitted to the station HMI. This time corresponds to the time when the value was frozen by the function.

The BLOCK and READ_VAL inputs can be connected to blocks, which are intended to be controlled either from the station HMI or/and the local HMI. As long as the BLOCK signal is set, the pulse counter is blocked. The signal connected to

READ_VAL performs readings according to the setting of parameter *CountCriteria*. The signal must be a pulse with a length >1 second.

The BI_PULSE input is connected to the used input of the function block for the binary input output module (BIO).

The RS_CNT input is used for resetting the counter.

Each PCGGIO function block has four binary output signals that can be used for event recording: INVALID, RESTART, BLOCKED and NEW_VAL. These signals and the SCAL_VAL signal are accessable over IEC 61850.

The INVALID signal is a steady signal and is set if the binary input module, where the pulse counter input is located, fails or has wrong configuration.

The RESTART signal is a steady signal and is set when the reported value does not comprise a complete integration cycle. That is, in the first message after IED start-up, in the first message after deblocking, and after the counter has wrapped around during last integration cycle.

The BLOCKED signal is a steady signal and is set when the counter is blocked. There are two reasons why the counter is blocked:

- The BLOCK input is set, or
- The binary input module, where the counter input is situated, is inoperative.

The NEW_VAL signal is a pulse signal. The signal is set if the counter value was updated since last report.

The SCAL_VAL signal consists of scaled value (according to parameter *Scale*), time and status information.

14.1.8 Technical data

Table 362: PCGGIO technical data

Function	Setting range	Accuracy
Cycle time for report of counter value	(1–3600) s	-

14.2 Energy calculation and demand handling ETPMMTR

14.2.1 Identification

Function description	IEC 61850 identification	IEC 60617 identification	ANSI/IEEE C37.2 device number
Energy calculation and demand handling	ETPMMTR	Wh↔	-

14.2.2 Functionality

Outputs from the Measurements (CVMMXN) function can be used to calculate energy consumption. Active as well as reactive values are calculated in import and export direction. Values can be read or generated as pulses. Maximum demand power values are also calculated by the function.

14.2.3 Function block

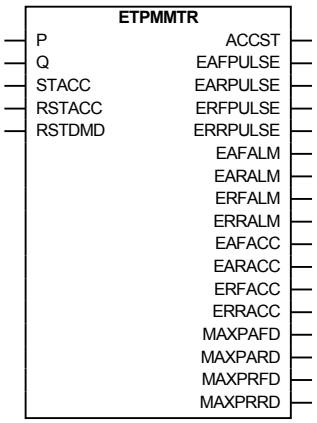

Figure 180: ETPMMTR function block

14.2.4 Signals

Table 363: ETPMMTR Input signals

Name	Type	Default	Description
P	REAL	0	Measured active power
Q	REAL	0	Measured reactive power
STACC	BOOLEAN	0	Start to accumulate energy values
RSTACC	BOOLEAN	0	Reset of accumulated enery reading
RSTDMD	BOOLEAN	0	Reset of maximum demand reading

Table 364: ETPMMTR Output signals

Name	Type	Description
ACCST	BOOLEAN	Start of accumulating energy values
EAFPULSE	BOOLEAN	Accumulated forward active energy pulse
EARPULSE	BOOLEAN	Accumulated reverse active energy pulse
ERFPULSE	BOOLEAN	Accumulated forward reactive energy pulse
ERRPULSE	BOOLEAN	Accumulated reverse reactive energy pulse
EAFALM	BOOLEAN	Alarm for active forward energy exceed limit in set interval
EARALM	BOOLEAN	Alarm for active reverse energy exceed limit in set interval
ERFALM	BOOLEAN	Alarm for reactive forward energy exceed limit in set interval
ERRALM	BOOLEAN	Alarm for reactive reverse energy exceed limit in set interval
EAFACC	REAL	Accumulated forward active energy value
EARACC	REAL	Accumulated reverse active energy value
ERFACC	REAL	Accumulated forward reactive energy value
ERRACC	REAL	Accumulated reverse reactive energy value
MAXPAFD	REAL	Maximum forward active power demand value for set interval
MAXPARD	REAL	Maximum reverse active power demand value for set interval
MAXPRFD	REAL	Maximum forward reactive power demand value for set interval
MAXPRRD	REAL	Maximum reactive power demand value in reverse direction

14.2.5 Settings

Table 365: ETPMMTR Non group settings (basic)

Name	Values (Range)	Unit	Step	Default	Description
Operation	Disabled Enabled	-	-	Disabled	Operation Enable/Disable
StartAcc	Disabled Enabled	-	-	Disabled	Activate the accumulation of energy values
tEnergy	1 Minute 5 Minutes 10 Minutes 15 Minutes 30 Minutes 60 Minutes 180 Minutes	-	-	1 Minute	Time interval for energy calculation
tEnergyOnPls	0.000 - 60.000	s	0.001	1.000	Energy accumulated pulse ON time
tEnergyOffPls	0.000 - 60.000	s	0.001	0.500	Energy accumulated pulse OFF time
EAFAccPlsQty	0.001 - 10000.000	MWh	0.001	100.000	Pulse quantity for active forward accumulated energy value
EARAccPlsQty	0.001 - 10000.000	MWh	0.001	100.000	Pulse quantity for active reverse accumulated energy value
ERFAccPlsQty	0.001 - 10000.000	MVArh	0.001	100.000	Pulse quantity for reactive forward accumulated energy value
ERRAccPlsQty	0.001 - 10000.000	MVArh	0.001	100.000	Pulse quantity for reactive reverse accumulated energy value

Table 366: ETPMMTR Non group settings (advanced)

Name	Values (Range)	Unit	Step	Default	Description
EALim	0.001 - 10000000000.000	MWh	0.001	1000000.000	Active energy limit
ERLim	0.001 - 10000000000.000	MVArh	0.001	1000.000	Reactive energy limit
EnZeroClamp	Disabled Enabled	-	-	Enabled	Enable of zero point clamping detection function
LevZeroClampP	0.001 - 10000.000	MW	0.001	10.000	Zero point clamping level at active Power
LevZeroClampQ	0.001 - 10000.000	MVAr	0.001	10.000	Zero point clamping level at reactive Power
DirEnergyAct	Forward Reverse	-	-	Forward	Direction of active energy flow Forward/ Reverse
DirEnergyReac	Forward Reverse	-	-	Forward	Direction of reactive energy flow Forward/ Reverse
EAFPrestVal	0.000 - 10000.000	MWh	0.001	0.000	Preset Initial value for forward active energy
EARPrestVal	0.000 - 10000.000	MWh	0.001	0.000	Preset Initial value for reverse active energy
ERFPresetVal	0.000 - 10000.000	MVArh	0.001	0.000	Preset Initial value for forward reactive energy
ERRPresetVal	0.000 - 10000.000	MVArh	0.001	0.000	Preset Initial value for reverse reactive energy

14.2.6 Monitored data

Table 367: ETPMMTR Monitored data

Name	Type	Values (Range)	Unit	Description
EAFACC	REAL	-	MWh	Accumulated forward active energy value
EARACC	REAL	-	MWh	Accumulated reverse active energy value
ERFACC	REAL	-	MVArh	Accumulated forward reactive energy value
ERRACC	REAL	-	MVArh	Accumulated reverse reactive energy value
MAXPAFD	REAL	-	MW	Maximum forward active power demand value for set interval
MAXPARD	REAL	-	MW	Maximum reverse active power demand value for set interval
MAXPRFD	REAL	-	MVAr	Maximum forward reactive power demand value for set interval
MAXPRRD	REAL	-	MVAr	Maximum reactive power demand value in reverse direction

14.2.7 Operation principle

The instantaneous output values of active and reactive power from the Measurements (CVMMXN) function block are used and integrated over a selected time *tEnergy* to measure the integrated energy. The energy values (in MWh and MVarh) are available as output signals and also as pulsed output which can be connected to a pulse counter. Outputs are available for forward as well as reverse direction. The accumulated energy values can be reset from the local HMI reset menu or with input signal RSTACC.

The maximum demand values for active and reactive power are calculated for the set time *tEnergy* and the maximum value is stored in a register available over communication and from outputs MAXPAFD, MAXPARD, MAXPRFD, MAXPRRD for the active and reactive power forward and reverse direction until reset with input signal RSTDMD or from the local HMI reset menu.

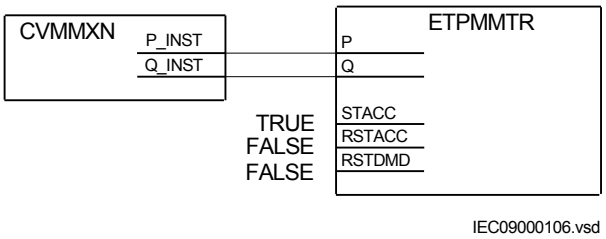

Figure 181: Connection of Energy calculation and demand handling function (ETPMMTR) to the Measurements function (CVMMXN)

14.2.8 Technical data

Table 368: ETPMMTR technical data

Function	Range or value	Accuracy
Energy metering	MWh Export/Import, MVArh Export/Import	Input from MMXU. No extra error at steady load

Section 15 Station communication

15.1 DNP3 protocol

DNP3 (Distributed Network Protocol) is a set of communications protocols used to communicate data between components in process automation systems. For a detailed description of the DNP3 protocol, see the DNP3 Communication protocol manual.

15.2 IEC 61850-8-1 communication protocol

15.2.1 Identification

Function description	IEC 61850 identification	IEC 60617 identification	ANSI/IEEE C37.2 device number
IEC 61850-8-1 communication protocol	IEC 61850-8-1	-	-

15.2.2 Functionality

The IED supports the communication protocols IEC 61850-8-1 and DNP3 over TCP/IP. All operational information and controls are available through these protocols. However, some communication functions, for example, horizontal communication (GOOSE) between the IEDs, is only enabled by the IEC 61850-8-1 communication protocol.

The IED is equipped with an optical Ethernet rear port for the substation communication standard IEC 61850-8-1. IEC 61850-8-1 protocol allows intelligent electrical devices (IEDs) from different vendors to exchange information and simplifies system engineering. Peer-to-peer communication according to GOOSE is part of the standard. Disturbance files uploading is provided.

Disturbance files are accessed using the IEC 61850-8-1 protocol. Disturbance files are available to any Ethernet based application via FTP in the standard Comtrade format. Further, the IED can send and receive binary values, double point values and measured values (for example from MMXU functions), together with their quality bit, using the IEC 61850-8-1 GOOSE profile. The IED meets the GOOSE performance requirements for tripping applications in substations, as defined by the IEC 61850 standard. The IED

interoperates with other IEC 61850-compliant IEDs, tools, and systems and simultaneously reports events to five different clients on the IEC 61850 station bus.

The event system has a rate limiter to reduce CPU load. The event channel has a quota of 10 events/second. If the quota is exceeded the event channel transmission is blocked until the event changes is below the quota, no event is lost.

All communication connectors, except for the front port connector, are placed on integrated communication modules. The IED is connected to Ethernet-based communication systems via the fibre-optic multimode LC connector (100BASE-FX).

The IED supports SNTP and IRIG-B time synchronization methods with a time-stamping resolution of 1 ms.

- Ethernet based: SNTP and DNP3
- With time synchronization wiring: IRIG-B

The IED supports IEC 60870-5-103 time synchronization methods with a time stamping resolution of 5 ms.

15.2.3 Communication interfaces and protocols

Table 369: Supported station communication interfaces and protocols

Protocol	Ethernet	Serial	
	100BASE-FX LC	Glass fibre (ST connector)	EIA-485
IEC 61850–8–1	●	-	-
DNP3	●	●	●
IEC 60870-5-103	-	●	●
● = Supported			

15.2.4 Settings

Table 370: IEC61850-8-1 Non group settings (basic)

Name	Values (Range)	Unit	Step	Default	Description
Operation	Disabled Enabled	-	-	Disabled	Operation Disabled/Enabled
GOOSE	Front LAN1	-	-	LAN1	Port for GOOSE communication

15.2.5 Technical data

Table 371: Communication protocol

Function	Value
Protocol TCP/IP	Ethernet
Communication speed for the IEDs	100 Mbit/s
Protocol	IEC 61850–8–1
Communication speed for the IEDs	100BASE-FX
Protocol	DNP3.0/TCP
Communication speed for the IEDs	100BASE-FX
Protocol, serial	IEC 60870–5–103
Communication speed for the IEDs	9600 or 19200 Bd
Protocol, serial	DNP3.0
Communication speed for the IEDs	300–19200 Bd

15.3 Horizontal communication via GOOSE for interlocking

15.3.1 Identification

Function description	IEC 61850 identification	IEC 60617 identification	ANSI/IEEE C37.2 device number
Horizontal communication via GOOSE for interlocking	GOOSEINTLKRCV	-	-

15.3.2 Function block

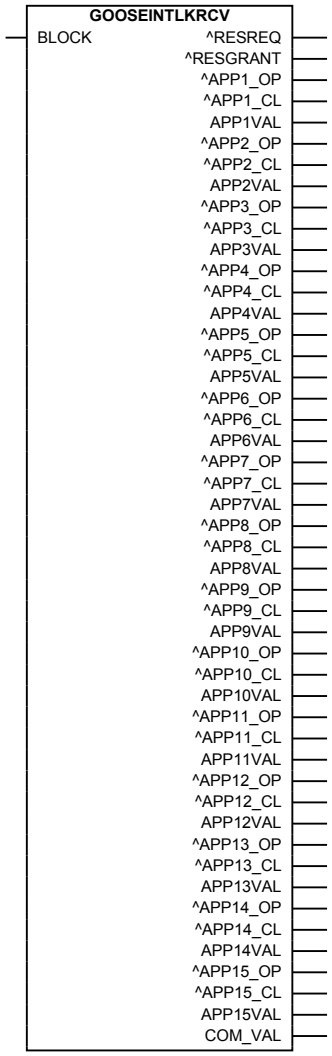

Figure 182: GOOSEINTLKRCV function block

15.3.3 Signals

Table 372: GOOSEINTLKRCV Input signals

Name	Type	Default	Description
BLOCK	BOOLEAN	0	Block of output signals

Table 373: GOOSEINTLKRCV Output signals

Name	Type	Description
RESREQ	BOOLEAN	Reservation request
RESGRANT	BOOLEAN	Reservation granted
APP1_OP	BOOLEAN	Apparatus 1 position is open
APP1_CL	BOOLEAN	Apparatus 1 position is closed
APP1VAL	BOOLEAN	Apparatus 1 position is valid
APP2_OP	BOOLEAN	Apparatus 2 position is open
APP2_CL	BOOLEAN	Apparatus 2 position is closed
APP2VAL	BOOLEAN	Apparatus 2 position is valid
APP3_OP	BOOLEAN	Apparatus 3 position is open
APP3_CL	BOOLEAN	Apparatus 3 position is closed
APP3VAL	BOOLEAN	Apparatus 3 position is valid
APP4_OP	BOOLEAN	Apparatus 4 position is open
APP4_CL	BOOLEAN	Apparatus 4 position is closed
APP4VAL	BOOLEAN	Apparatus 4 position is valid
APP5_OP	BOOLEAN	Apparatus 5 position is open
APP5_CL	BOOLEAN	Apparatus 5 position is closed
APP5VAL	BOOLEAN	Apparatus 5 position is valid
APP6_OP	BOOLEAN	Apparatus 6 position is open
APP6_CL	BOOLEAN	Apparatus 6 position is closed
APP6VAL	BOOLEAN	Apparatus 6 position is valid
APP7_OP	BOOLEAN	Apparatus 7 position is open
APP7_CL	BOOLEAN	Apparatus 7 position is closed
APP7VAL	BOOLEAN	Apparatus 7 position is valid
APP8_OP	BOOLEAN	Apparatus 8 position is open
APP8_CL	BOOLEAN	Apparatus 8 position is closed
APP8VAL	BOOLEAN	Apparatus 8 position is valid
APP9_OP	BOOLEAN	Apparatus 9 position is open
APP9_CL	BOOLEAN	Apparatus 9 position is closed
APP9VAL	BOOLEAN	Apparatus 9 position is valid
APP10_OP	BOOLEAN	Apparatus 10 position is open
APP10_CL	BOOLEAN	Apparatus 10 position is closed
APP10VAL	BOOLEAN	Apparatus 10 position is valid
APP11_OP	BOOLEAN	Apparatus 11 position is open
APP11_CL	BOOLEAN	Apparatus 11 position is closed
APP11VAL	BOOLEAN	Apparatus 11 position is valid

Table continues on next page

Name	Type	Description
APP12_OP	BOOLEAN	Apparatus 12 position is open
APP12_CL	BOOLEAN	Apparatus 12 position is closed
APP12VAL	BOOLEAN	Apparatus 12 position is valid
APP13_OP	BOOLEAN	Apparatus 13 position is open
APP13_CL	BOOLEAN	Apparatus 13 position is closed
APP13VAL	BOOLEAN	Apparatus 13 position is valid
APP14_OP	BOOLEAN	Apparatus 14 position is open
APP14_CL	BOOLEAN	Apparatus 14 position is closed
APP14VAL	BOOLEAN	Apparatus 14 position is valid
APP15_OP	BOOLEAN	Apparatus 15 position is open
APP15_CL	BOOLEAN	Apparatus 15 position is closed
APP15VAL	BOOLEAN	Apparatus 15 position is valid
COM_VAL	BOOLEAN	Receive communication status is valid

15.3.4 Settings

Table 374: GOOSEINTLKRCV Non group settings (basic)

Name	Values (Range)	Unit	Step	Default	Description
Operation	Disabled Enabled	-	-	Disabled	Operation Disabled/Enabled

15.4 Goose binary receive GOOSEBINRCV

15.4.1 Identification

Function description	IEC 61850 identification	IEC 60617 identification	ANSI/IEEE C37.2 device number
Goose binary receive	GOOSEBINRCV	-	-

15.4.2 Function block

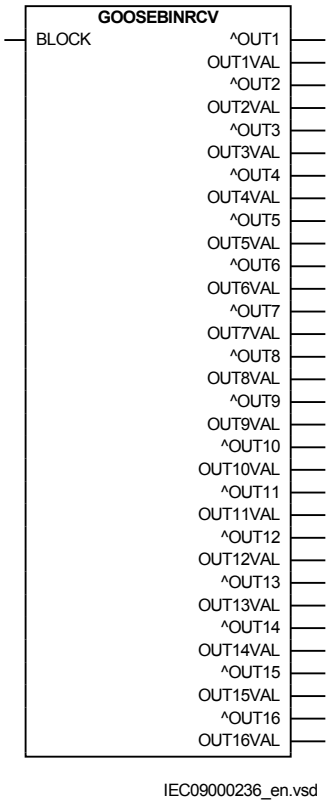

Figure 183: GOOSEBINRCV function block

15.4.3 Signals

Table 375: GOOSEBINRCV Input signals

Name	Type	Default	Description
BLOCK	BOOLEAN	0	Block of output signals

Table 376: GOOSEBINRCV Output signals

Name	Type	Description
OUT1	BOOLEAN	Binary output 1
OUT1VAL	BOOLEAN	Valid data on binary output 1
OUT2	BOOLEAN	Binary output 2
OUT2VAL	BOOLEAN	Valid data on binary output 2
Table continues on next page		

Name	Type	Description
OUT3	BOOLEAN	Binary output 3
OUT3VAL	BOOLEAN	Valid data on binary output 3
OUT4	BOOLEAN	Binary output 4
OUT4VAL	BOOLEAN	Valid data on binary output 4
OUT5	BOOLEAN	Binary output 5
OUT5VAL	BOOLEAN	Valid data on binary output 5
OUT6	BOOLEAN	Binary output 6
OUT6VAL	BOOLEAN	Valid data on binary output 6
OUT7	BOOLEAN	Binary output 7
OUT7VAL	BOOLEAN	Valid data on binary output 7
OUT8	BOOLEAN	Binary output 8
OUT8VAL	BOOLEAN	Valid data on binary output 8
OUT9	BOOLEAN	Binary output 9
OUT9VAL	BOOLEAN	Valid data on binary output 9
OUT10	BOOLEAN	Binary output 10
OUT10VAL	BOOLEAN	Valid data on binary output 10
OUT11	BOOLEAN	Binary output 11
OUT11VAL	BOOLEAN	Valid data on binary output 11
OUT12	BOOLEAN	Binary output 12
OUT12VAL	BOOLEAN	Valid data on binary output 12
OUT13	BOOLEAN	Binary output 13
OUT13VAL	BOOLEAN	Valid data on binary output 13
OUT14	BOOLEAN	Binary output 14
OUT14VAL	BOOLEAN	Valid data on binary output 14
OUT15	BOOLEAN	Binary output 15
OUT15VAL	BOOLEAN	Valid data on binary output 15
OUT16	BOOLEAN	Binary output 16
OUT16VAL	BOOLEAN	Valid data on binary output 16

15.4.4 Settings

Table 377: GOOSEBINRCV Non group settings (basic)

Name	Values (Range)	Unit	Step	Default	Description
Operation	Disabled Enabled	-	-	Disabled	Operation Disabled/Enabled

15.5 GOOSE VCTR configuration for send and receive GOOSEVCTRCONF

15.5.1 Identification

Function description	IEC 61850 identification	IEC 60617 identification	ANSI/IEEE C37.2 device number
GOOSE VCTR configuration for send and receive	GOOSEVCTRCONF	-	-

15.5.2 Functionality

GOOSEVCTRCONF function is used to control the rate (in seconds) at which voltage control information from TR8ATCC (90) is transmitted/received to/from other IEDs via GOOSE communication. GOOSEVCTRCONF function is visible in PST.

The following voltage control information can be sent from TR8ATCC (90) via GOOSE communication:

- BusV
- LoadAIm
- LoadARe
- PosRel
- SetV
- VCTRStatus
- X2

15.5.3 Settings

Table 378: GOOSEVCTRCONF Non group settings (basic)

Name	Values (Range)	Unit	Step	Default	Description
SendOperation	Off On	-	-	On	Send operation
SendInterval	0.1 - 5.0	s	0.1	0.3	Send interval
ReceiveOperation	Off On	-	-	On	Receive operation
ReceiveInterval	0.1 - 10.0	s	0.1	0.8	Receive interval

15.6 GOOSE voltage control receiving block GOOSEVCTRRCV

15.6.1 Identification

Function description	IEC 61850 identification	IEC 60617 identification	ANSI/IEEE C37.2 device number
GOOSE voltage control receiving block	GOOSEVCTRRCV	-	-

15.6.2 Functionality

GOOSEVCTRRCV component receives the voltage control data from GOOSE network at the user defined rate.

This component also checks the received data validity, communication validity and test mode. Communication validity will be checked upon the rate of data reception. Data validity also depends upon the communication. If communication is invalid then data validity will also be invalid. IEC 61850 also checks for data validity using internal parameters which will also be passed to the DATAVALID output.

15.6.3 Function block

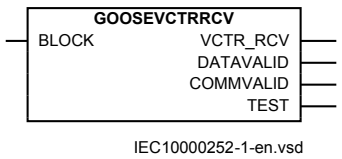

Figure 184: GOOSEVCTRRCV function block

15.6.4 Signals

Table 379: GOOSEVCTRRCV Input signals

Name	Type	Default	Description
BLOCK	BOOLEAN	0	Block function

Table 380: GOOSEVCTRRCV Output signals

Name	Type	Description
VCTR_RCV	GROUP SIGNAL	Output group connection to voltage control
DATAVALID	BOOLEAN	Data valid for output signals
COMMVALID	BOOLEAN	Communication valid for output signals
TEST	BOOLEAN	Test output

15.6.5 Operation principle

The DATAVALID output will be HIGH if the incoming message is with valid data.

The COMMVALID output will become LOW when the sending IED is under total failure condition and the GOOSE transmission from the sending IED does not happen.

The TEST output will go HIGH if the sending IED is in test mode.

The input of this GOOSE block must be linked in SMT by means of a cross to receive the voltage control values.

The implementation for IEC61850 quality data handling is restricted to a simple level. If quality data validity is GOOD then the DATAVALID output will be HIGH. If quality data validity is INVALID, QUESTIONABLE, OVERFLOW, FAILURE or OLD DATA then the DATAVALID output will be LOW.

15.7 GOOSE function block to receive a double point value GOOSEDPRCV

15.7.1 Identification

Function description	IEC 61850 identification	IEC 60617 identification	ANSI/IEEE C37.2 device number
GOOSE function block to receive a double point value	GOOSEDPRCV	-	-

15.7.2 Functionality

GOOSEDPRCV is used to receive a double point value using IEC61850 protocol via GOOSE.

15.7.3 Function block

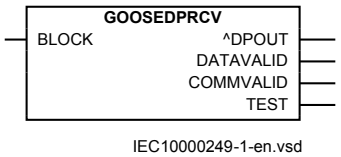

Figure 185: GOOSEDPRCV function block

15.7.4 Signals

Table 381: GOOSEDPRCV Input signals

Name	Type	Default	Description
BLOCK	BOOLEAN	0	Block of function

Table 382: GOOSEDPRCV Output signals

Name	Type	Description
DPOUT	INTEGER	Double point output
DATAVALID	BOOLEAN	Data valid for double point output
COMMVALID	BOOLEAN	Communication valid for double point output
TEST	BOOLEAN	Test output

15.7.5 Settings

Table 383: GOOSEDPRCV Non group settings (basic)

Name	Values (Range)	Unit	Step	Default	Description
Operation	Disabled Enabled	-	-	Disabled	Operation Enable/Disable

15.7.6 Operation principle

The DATAVALID output will be HIGH if the incoming message is with valid data.

The COMMVALID output will become LOW when the sending IED is under total failure condition and the GOOSE transmission from the sending IED does not happen.

The TEST output will go HIGH if the sending IED is in test mode.

The input of this GOOSE block must be linked in SMT by means of a cross to receive the double point values.

The implementation for IEC61850 quality data handling is restricted to a simple level. If quality data validity is GOOD then the DATAVALID output will be HIGH. If quality data validity is INVALID, QUESTIONABLE, OVERFLOW, FAILURE or OLD DATA then the DATAVALID output will be LOW.

15.8 GOOSE function block to receive an integer value GOOSEINTRCV

15.8.1 Identification

Function description	IEC 61850 identification	IEC 60617 identification	ANSI/IEEE C37.2 device number
GOOSE function block to receive an integer value	GOOSEINTRCV	-	-

15.8.2 Functionality

GOOSEINTRCV is used to receive an integer value using IEC61850 protocol via GOOSE.

15.8.3 Function block

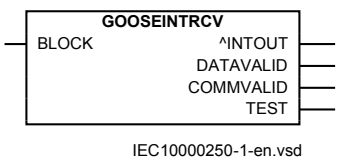

Figure 186: GOOSEINTRCV function block

15.8.4 Signals

Table 384: GOOSEINTRCV Input signals

Name	Type	Default	Description
BLOCK	BOOLEAN	0	Block of function

Table 385: GOOSEINTRCV Output signals

Name	Type	Description
INTOUT	INTEGER	Integer output
DATAVALID	BOOLEAN	Data valid for integer output
COMMVALID	BOOLEAN	Communication valid for integer output
TEST	BOOLEAN	Test output

15.8.5 Settings

Table 386: GOOSEINTRCV Non group settings (basic)

Name	Values (Range)	Unit	Step	Default	Description
Operation	Disabled Enabled	-	-	Disabled	Operation Off/On

15.8.6 Operation principle

The DATAVALID output will be HIGH if the incoming message is with valid data.

The COMMVALID output will become LOW when the sending IED is under total failure condition and the GOOSE transmission from the sending IED does not happen.

The TEST output will go HIGH if the sending IED is in test mode.

The input of this GOOSE block must be linked in SMT by means of a cross to receive the integer values.

The implementation for IEC61850 quality data handling is restricted to a simple level. If quality data validity is GOOD then the DATAVALID output will be HIGH. If quality data validity is INVALID, QUESTIONABLE, OVERFLOW, FAILURE or OLD DATA then the DATAVALID output will be LOW.

15.9 GOOSE function block to receive a measurand value GOOSEMVRCV

15.9.1 Identification

Function description	IEC 61850 identification	IEC 60617 identification	ANSI/IEEE C37.2 device number
GOOSE function block to receive a measurand value	GOOSEMVRCV	-	-

15.9.2 Functionality

GOOSEMVRCV is used to receive measured value using IEC61850 protocol via GOOSE.

15.9.3 Function block

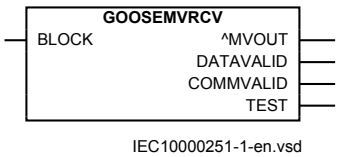

Figure 187: GOOSEMVRCV function block

15.9.4 Signals

Table 387: GOOSEMVRCV Input signals

Name	Type	Default	Description
BLOCK	BOOLEAN	0	Block of function

Table 388: GOOSEMVRCV Output signals

Name	Type	Description
MVOUT	REAL	Measurand value output
DATAVALID	BOOLEAN	Data valid for measurand value output
COMMVALID	BOOLEAN	Communication valid for measurand value output
TEST	BOOLEAN	Test output

15.9.5 Settings

Table 389: GOOSEMVRCV Non group settings (basic)

Name	Values (Range)	Unit	Step	Default	Description
Operation	Disabled Enabled	-	-	Disabled	Operation Enable/Disable

15.9.6 Operation principle

The DATAVALID output will be HIGH if the incoming message is with valid data.

The COMMVALID output will become LOW when the sending IED is under total failure condition and the GOOSE transmission from the sending IED does not happen.

The TEST output will go HIGH if the sending IED is in test mode.

The input of this GOOSE block must be linked in SMT by means of a cross to receive the float values.

The implementation for IEC61850 quality data handling is restricted to a simple level. If quality data validity is GOOD then the DATAVALID output will be HIGH. If quality data validity is INVALID, QUESTIONABLE, OVERFLOW, FAILURE or OLD DATA then the DATAVALID output will be LOW.

15.10 GOOSE function block to receive a single point value GOOSESPRCV

15.10.1 Identification

Function description	IEC 61850 identification	IEC 60617 identification	ANSI/IEEE C37.2 device number
GOOSE function block to receive a single point value	GOOSESPRCV	-	-

15.10.2 Functionality

GOOSESPRCV is used to receive a single point value using IEC61850 protocol via GOOSE.

15.10.3 Function block

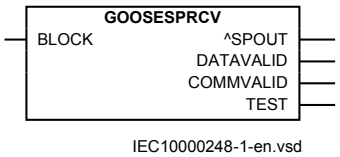

Figure 188: GOOSESPRCV function block

15.10.4 Signals

Table 390: GOOSESPRCV Input signals

Name	Type	Default	Description
BLOCK	BOOLEAN	0	Block of function

Table 391: GOOSESPRCV Output signals

Name	Type	Description
SPOUT	BOOLEAN	Single point output
DATAVALID	BOOLEAN	Data valid for single point output
COMMVALID	BOOLEAN	Communication valid for single point output
TEST	BOOLEAN	Test output

15.10.5 Settings

Table 392: GOOSESPRCV Non group settings (basic)

Name	Values (Range)	Unit	Step	Default	Description
Operation	Disabled Enabled	-	-	Disabled	Operation Off/On

15.10.6 Operation principle

The DATAVALID output will be HIGH if the incoming message is with valid data.

The COMMVALID output will become LOW when the sending IED is under total failure condition and the GOOSE transmission from the sending IED does not happen.

The TEST output will go HIGH if the sending IED is in test mode.

The input of this GOOSE block must be linked in SMT by means of a cross to receive the binary single point values.

The implementation for IEC61850 quality data handling is restricted to a simple level. If quality data validity is GOOD then the DATAVALID output will be HIGH. If quality data validity is INVALID, QUESTIONABLE, OVERFLOW, FAILURE or OLD DATA then the DATAVALID output will be LOW.

15.11 IEC 60870-5-103 communication protocol

15.11.1 Functionality

IEC 60870-5-103 is an unbalanced (master-slave) protocol for coded-bit serial communication exchanging information with a control system, and with a data transfer rate up to 19200 bit/s. In IEC terminology, a primary station is a master and a secondary station is a slave. The communication is based on a point-to-point principle. The master must have software that can interpret IEC 60870-5-103 communication messages.

Function blocks available for the IEC 60870–5–103 protocol are described in sections Control and Monitoring.The Communication protocol manual for IEC 60870-5-103 includes the 650 series vendor specific IEC 60870-5-103 implementation.

IEC 60870-5-103 protocol can be configured to use either the optical serial or RS485 serial communication interface on the COM05 communication module. The functions Operation selection for optical serial (OPTICALPROT) and Operation selection for RS485 (RS485PROT) are used to select the communication interface.

See the Engineering manual for IEC103 60870-5-103 engineering procedures in PCM600.

The functions IEC60870-5-103 Optical serial communication (OPTICAL103) and IEC60870-5-103 serial communication for RS485 (RS485103) are used to configure

the communication parameters for either the optical serial or RS485 serial communication interfaces.

15.11.2 Settings

Table 393: OPTICAL103 Non group settings (basic)

Name	Values (Range)	Unit	Step	Default	Description
SlaveAddress	1 - 31	-	1	1	Slave address
BaudRate	9600 Bd 19200 Bd	-	-	9600 Bd	Baudrate on serial line
RevPolarity	Disabled Enabled	-	-	Enabled	Invert polarity
CycMeasRepTime	1.0 - 1800.0	s	0.1	5.0	Cyclic reporting time of measurments
MasterTimeDomain	UTC Local Local with DST	-	-	UTC	Master time domain
TimeSyncMode	IEDTime LinMastTime IEDTimeSkew	-	-	IEDTime	Time synchronization mode
EvalTimeAccuracy	Disabled 5ms 10ms 20ms 40ms	-	-	5ms	Evaluate time accuracy for invalid time
EventRepMode	SeqOfEvent HiPriSpont	-	-	SeqOfEvent	Event reporting mode

Table 394: RS485103 Non group settings (basic)

Name	Values (Range)	Unit	Step	Default	Description
SlaveAddress	1 - 31	-	1	1	Slave address
BaudRate	9600 Bd 19200 Bd	-	-	9600 Bd	Baudrate on serial line
CycMeasRepTime	1.0 - 1800.0	s	0.1	5.0	Cyclic reporting time of measurments
MasterTimeDomain	UTC Local Local with DST	-	-	UTC	Master time domain
TimeSyncMode	IEDTime LinMastTime IEDTimeSkew	-	-	IEDTime	Time synchronization mode
EvalTimeAccuracy	Disabled 5ms 10ms 20ms 40ms	-	-	5ms	Evaluate time accuracy for invalid time
EventRepMode	SeqOfEvent HiPriSpont	-	-	SeqOfEvent	Event reporting mode

Section 16 Basic IED functions

16.1 Self supervision with internal event list

16.1.1 Functionality

The Self supervision with internal event list (INTERRSIG and SELFSUPEVLST) function reacts to internal system events generated by the different built-in self-supervision elements. The internal events are saved in an internal event list.

16.1.2 Internal error signals INTERRSIG

16.1.2.1 Identification

Function description	IEC 61850 identification	IEC 60617 identification	ANSI/IEEE C37.2 device number
Internal error signal	INTERRSIG	-	-

16.1.2.2 Function block

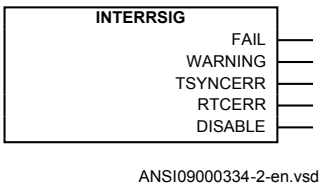

Figure 189: INTERRSIG function block

16.1.2.3 Signals

Table 395: INTERRSIG Output signals

Name	Type	Description
FAIL	BOOLEAN	Internal fail
WARNING	BOOLEAN	Internal warning
TSYNCERR	BOOLEAN	Time synchronization error
RTCERR	BOOLEAN	Real time clock error
DISABLE	BOOLEAN	Application Disable

16.1.2.4 Settings

The function does not have any settings available in Local HMI or Protection and Control IED Manager (PCM600).

16.1.3 Internal event list SELFSUPEVLST

16.1.3.1 Identification

Function description	IEC 61850 identification	IEC 60617 identification	ANSI/IEEE C37.2 device number
Internal event list	SELFSUPEVLST	-	-

16.1.3.2 Settings

The function does not have any parameters available in Local HMI or Protection and Control IED Manager (PCM600).

16.1.4 Operation principle

The self-supervision operates continuously and includes:

- Normal micro-processor watchdog function.
- Checking of digitized measuring signals.
- Other alarms, for example hardware and time synchronization.

The SELFSUPEVLST function status can be monitored from the local HMI, from the Event Viewer in PCM600 or from a SMS/SCS system.

Under the Diagnostics menu in the local HMI the present information from the self-supervision function can be reviewed. The information can be found under **Main**

menu/Diagnostics/Internal events or **Main menu/Diagnostics/IED status/General**. The information from the self-supervision function is also available in the Event Viewer in PCM600. Both events from the Event list and the internal events are listed in time consecutive order in the Event Viewer.

A self-supervision summary can be obtained by means of the potential free change-over alarm contact (INTERNAL FAIL) located on the power supply module. This output contact is activated (where there is no fault) and deactivated (where there is a fault) by the Internal Fail signal, see Figure 190. Also the software watchdog timeout and the undervoltage detection of the PSM will deactivate the contact as well.

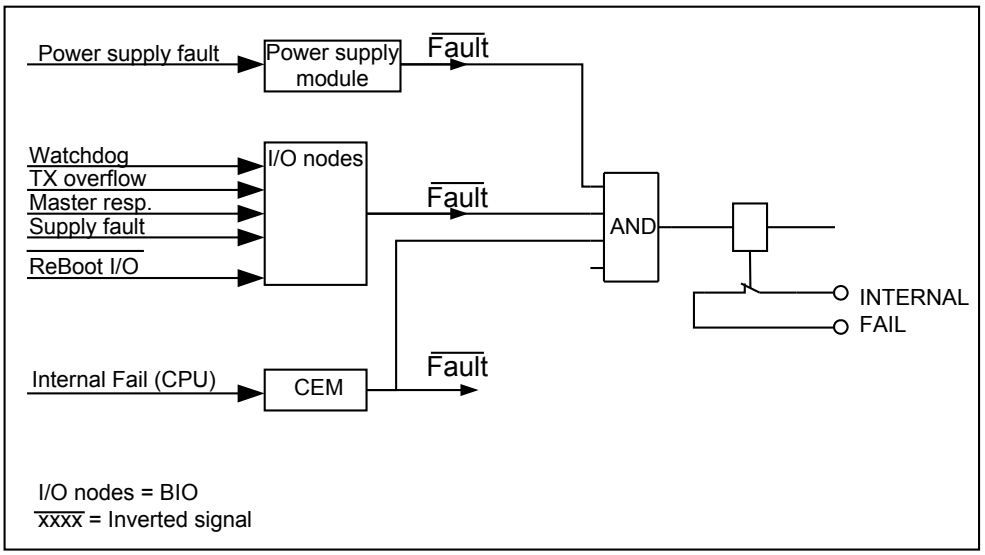

Figure 190: Hardware self-supervision, potential-free contact

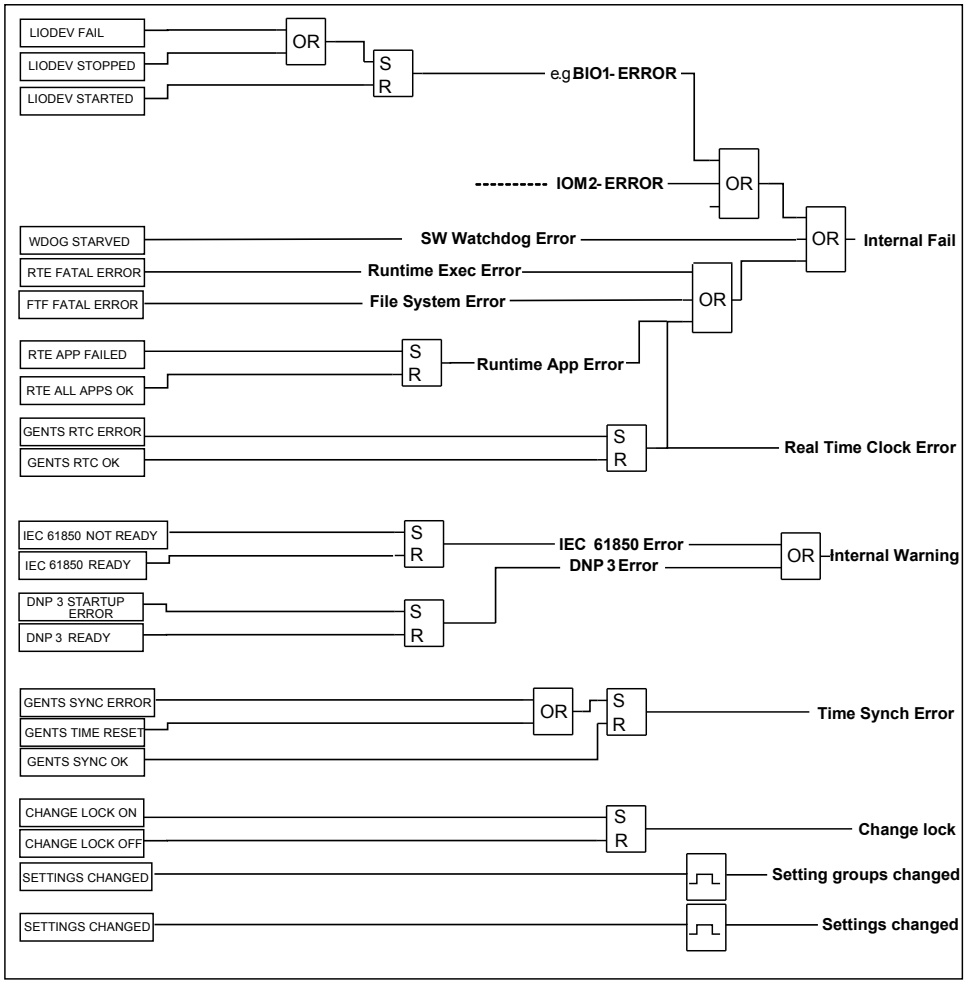

Figure 191: Self supervision, function block internal signals

Some signals are available from the INTERRSIG function block. The signals from INTERRSIG function block are sent as events to the station level of the control system. The signals from the INTERRSIG function block can also be connected to binary outputs for signalization via output relays or they can be used as conditions for other functions if required/desired.

Individual error signals from I/O modules can be obtained from respective module in the Signal Matrix tool. Error signals from time synchronization can be obtained from the time synchronization block INTERRSIG.

16.1.4.1 Internal signals

SELFSUPEVLST function provides several status signals, that tells about the condition of the IED. As they provide information about the internal status of the IED, they are also called internal signals. The internal signals can be divided into two groups.

- Standard signals are always presented in the IED, see Table 396.
- Hardware dependent internal signals are collected depending on the hardware configuration, see Table 397.

Explanations of internal signals are listed in Table 398.

Table 396: SELFSUPEVLST standard internal signals

Name of signal	Description
Internal Fail	Internal fail status
Internal Warning	Internal warning status
Real Time Clock Error	Real time clock status
Time Synch Error	Time synchronization status
Runtime App Error	Runtime application error status
Runtime Exec Error	Runtime execution error status
IEC61850 Error	IEC 61850 error status
SW Watchdog Error	SW watchdog error status
Setting(s) Changed	Setting(s) changed
Setting Group(s) Changed	Setting group(s) changed
Change Lock	Change lock status
File System Error	Fault tolerant file system status
DNP3 Error	DNP3 error status

Table 397: Self-supervision's hardware dependent internal signals

Card	Name of signal	Description
PSM	PSM-Error	Power supply module error status
TRM	TRM-Error	Transformator module error status
COM	COM-Error	Communication module error status
BIO	BIO-Error	Binary input/output module error status
AIM	AIM-Error	Analog input module error status

Table 398: Explanations of internal signals

Name of signal	Reasons for activation
Internal Fail	This signal will be active if one or more of the following internal signals are active; Real Time Clock Error, Runtime App Error, Runtime Exec Error, SW Watchdog Error, File System Error
Internal Warning	This signal will be active if one or more of the following internal signals are active; IEC 61850 Error, DNP3 Error
Real Time Clock Error	This signal will be active if there is a hardware error with the real time clock.
Time Synch Error	This signal will be active when the source of the time synchronization is lost, or when the time system has to make a time reset.
Runtime Exec Error	This signal will be active if the Runtime Engine failed to do some actions with the application threads. The actions can be loading of settings or parameters for components, changing of setting groups, loading or unloading of application threads.
IEC61850 Error	This signal will be active if the IEC 61850 stack did not succeed in some actions like reading IEC 61850 configuration, startup, for example.
SW Watchdog Error	This signal will be activated when the IED has been under too heavy load for at least 5 minutes. The operating systems background task is used for the measurements.
Runtime App Error	This signal will be active if one or more of the application threads are not in the state that Runtime Engine expects. The states can be CREATED, INITIALIZED, RUNNING, for example.
Setting(s) Changed	This signal will generate an internal event to the internal event list if any setting(s) is changed.
Setting Group(s) Changed	This signal will generate an internal event to the Internal Event List if any setting group(s) is changed.
Change Lock	This signal will generate an internal Event to the Internal Event List if the Change Lock status is changed
File System Error	This signal will be active if both the working file and the backup file are corrupted and cannot be recovered.
DNP3 Error	This signal will be active when DNP3 detects any configuration error during startup.

16.1.4.2 Run-time model

The analog signals to the A/D converter is internally distributed into two different converters, one with low amplification and one with high amplification, see Figure 192.

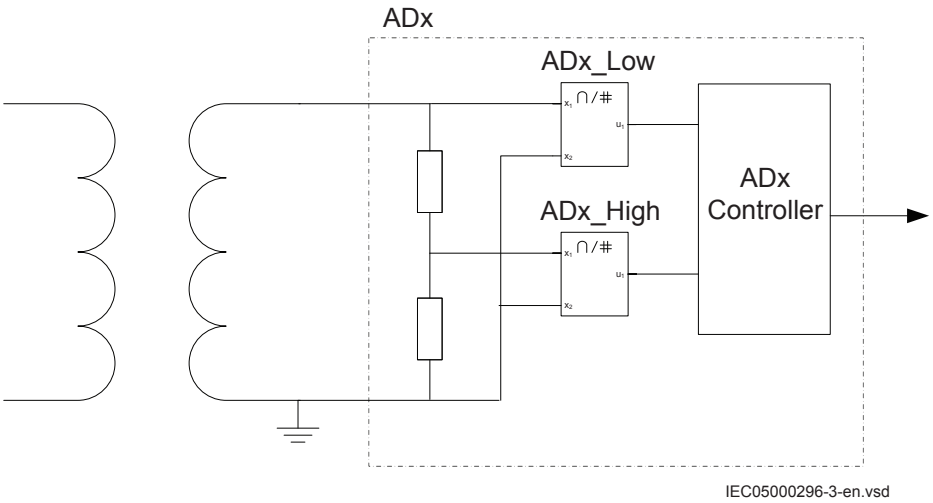

Figure 192: Simplified drawing of A/D converter for the IED.

The technique to split the analog input signal into two A/D converter(s) with different amplification makes it possible to supervise the A/D converters under normal conditions where the signals from the two A/D converters should be identical. An alarm is given if the signals are out of the boundaries. Another benefit is that it improves the dynamic performance of the A/D conversion.

The self-supervision of the A/D conversion is controlled by the ADx_Controller function. One of the tasks for the controller is to perform a validation of the input signals. The ADx_Controller function is included in all IEDs equipped with an analog input module. This is done in a validation filter which has mainly two objects: First is the validation part that checks that the A/D conversion seems to work as expected. Secondly, the filter chooses which of the two signals that shall be sent to the CPU, that is the signal that has the most suitable signal level, the *ADx_LO* or the 16 times higher *ADx_HI*.

When the signal is within measurable limits on both channels, a direct comparison of the two A/D converter channels can be performed. If the validation fails, the CPU will be informed and an alarm will be given for A/D converter failure.

The ADx_Controller also supervise other parts of the A/D converter.

16.1.5 Technical data

Table 399: Self supervision with internal event list

Data	Value
Recording manner	Continuous, event controlled
List size	40 events, first in-first out

16.2 Time synchronization

16.2.1 Functionality

The time synchronization source selector is used to select a common source of absolute time for the IED when it is a part of a protection system. This makes it possible to compare event and disturbance data between all IEDs in a station automation system.

Micro SCADA OPC server should not be used as a time synchronization source.

16.2.2 Time synchronization TIMESYNCHGEN

16.2.2.1 Identification

Function description	IEC 61850 identification	IEC 60617 identification	ANSI/IEEE C37.2 device number
Time synchronization	TIMESYNCHGEN	-	-

16.2.2.2 Settings

Table 400: TIMESYNCHGEN Non group settings (basic)

Name	Values (Range)	Unit	Step	Default	Description
CoarseSyncSrc	Disabled SNTP DNP IEC60870-5-103	-	-	Disabled	Coarse time synchronization source
FineSyncSource	Disabled SNTP IRIG-B	-	-	Disabled	Fine time synchronization source
SyncMaster	Disabled SNTP-Server	-	-	Disabled	Activate IED as synchronization master

16.2.3 Time synchronization via SNTP

16.2.3.1 Identification

Function description	IEC 61850 identification	IEC 60617 identification	ANSI/IEEE C37.2 device number
Time synchronization via SNTP	SNTP	-	-

16.2.3.2 Settings

Table 401: SNTP Non group settings (basic)

Name	Values (Range)	Unit	Step	Default	Description
ServerIP-Add	0 - 255	IP Address	1	0.0.0.0	Server IP-address
RedServIP-Add	0 - 255	IP Address	1	0.0.0.0	Redundant server IP-address

16.2.4 Time system, summer time begin DSTBEGIN

16.2.4.1 Identification

Function description	IEC 61850 identification	IEC 60617 identification	ANSI/IEEE C37.2 device number
Time system, summer time begins	DSTBEGIN	-	-

16.2.4.2 Settings

Table 402: DSTBEGIN Non group settings (basic)

Name	Values (Range)	Unit	Step	Default	Description
MonthInYear	January February March April May June July August September October November December	-	-	March	Month in year when daylight time starts
DayInWeek	Sunday Monday Tuesday Wednesday Thursday Friday Saturday	-	-	Sunday	Day in week when daylight time starts
WeekInMonth	Last First Second Third Fourth	-	-	Last	Week in month when daylight time starts
UTCTimeOfDay	00:00 00:30 1:00 1:30 ... 48:00	-	-	1:00	UTC Time of day in hours when daylight time starts

16.2.5 Time system, summer time ends DSTEND

16.2.5.1 Identification

Function description	IEC 61850 identification	IEC 60617 identification	ANSI/IEEE C37.2 device number
Time system, summer time ends	DSTEND	-	-

16.2.5.2 Settings

Table 403: DSTEND Non group settings (basic)

Name	Values (Range)	Unit	Step	Default	Description
MonthInYear	January February March April May June July August September October November December	-	-	October	Month in year when daylight time ends
DayInWeek	Sunday Monday Tuesday Wednesday Thursday Friday Saturday	-	-	Sunday	Day in week when daylight time ends
WeekInMonth	Last First Second Third Fourth	-	-	Last	Week in month when daylight time ends
UTCTimeOfDay	00:00 00:30 1:00 1:30 ... 48:00	-	-	1:00	UTC Time of day in hours when daylight time ends

16.2.6 Time zone from UTC TIMEZONE

16.2.6.1 Identification

Function description	IEC 61850 identification	IEC 60617 identification	ANSI/IEEE C37.2 device number
Time zone from UTC	TIMEZONE	-	-

16.2.6.2 Settings

Table 404: TIMEZONE Non group settings (basic)

Name	Values (Range)	Unit	Step	Default	Description
NoHalfHourUTC	-24 - 24	-	1	0	Number of half-hours from UTC

16.2.7 Time synchronization via IRIG-B

16.2.7.1 Identification

Function description	IEC 61850 identification	IEC 60617 identification	ANSI/IEEE C37.2 device number
Time synchronization via IRIG-B	IRIG-B	-	-

16.2.7.2 Settings

Table 405: IRIG-B Non group settings (basic)

Name	Values (Range)	Unit	Step	Default	Description
TimeDomain	LocalTime UTC	-	-	LocalTime	Time domain
Encoding	IRIG-B 1344 1344TZ	-	-	IRIG-B	Type of encoding
TimeZoneAs1344	MinusTZ PlusTZ	-	-	PlusTZ	Time zone as in 1344 standard

16.2.8 Operation principle

16.2.8.1 General concepts

Time definitions

The error of a clock is the difference between the actual time of the clock, and the time the clock is intended to have. Clock accuracy indicates the increase in error, that is, the time gained or lost by the clock. A disciplined clock knows its own faults and tries to compensate for them.

Design of the time system (clock synchronization)

The time system is based on a "software clock", which can be adjusted from external time sources and a hardware clock. The protection and control functions will be timed from a “hardware” clock, which runs independently from the “software” clock. See figure 193.

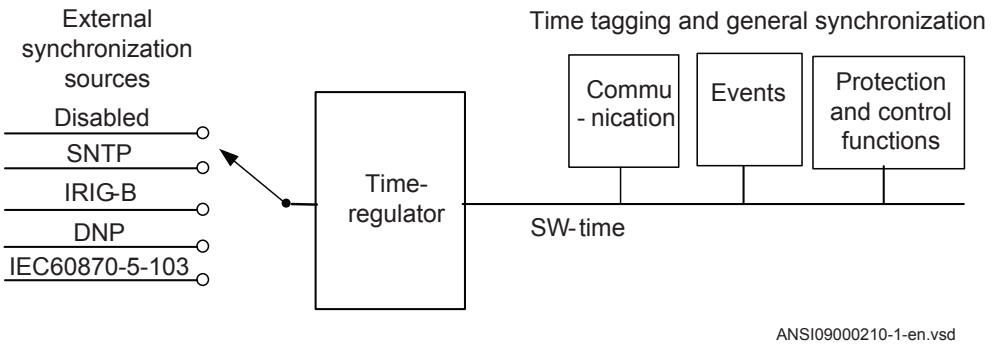

Figure 193: Design of time system (clock synchronization)

All time tagging is performed by the “software” clock. When for example a status signal is changed in the protection system with the function based on ”free running“ hardware clock, the event is time tagged by the software clock when it reaches the event recorder. Thus the “hardware” clock can run independently.

Synchronization principle

From a general point of view synchronization can be seen as a hierarchical structure. A function is synchronized from a higher level and provides synchronization to lower levels.

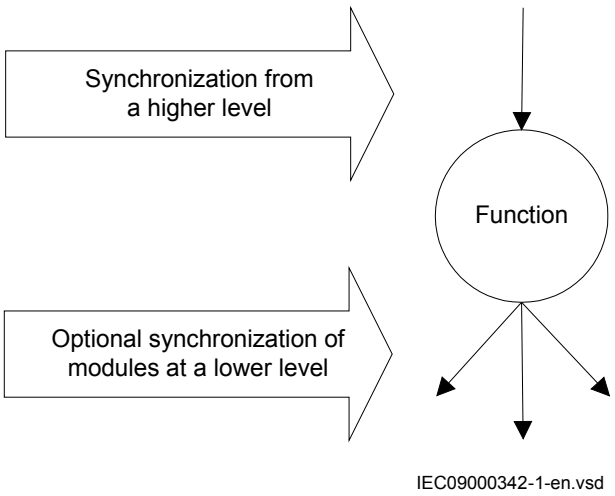

Figure 194: Synchronization principle

A function is said to be synchronized when it periodically receives synchronization messages from a higher level. As the level decreases, the accuracy of the synchronization decreases as well. A function can have several potential sources of synchronization, with different maximum errors. This gives the function the possibility to choose the source with the best quality, and to adjust its internal clock after this source. The maximum error of a clock can be defined as:

- The maximum error of the last used synchronization message
- The time since the last used synchronization message
- The rate accuracy of the internal clock in the function.

16.2.8.2 Real-time clock (RTC) operation

The IED has a built-in real-time clock (RTC) with a resolution of one second. The clock has a built-in calendar that handles leap years through 2038.

Real-time clock at power off

During power off, the system time in the IED is kept by a capacitor-backed real-time clock that will provide 35 ppm accuracy for 5 days. This means that if the power is off, the time in the IED may drift with 3 seconds per day, during 5 days, and after this time the time will be lost completely.

Real-time clock at startup

Time synchronization startup procedure

The first message that contains the full time (as for instance SNTP and IRIG-B) gives an accurate time to the IED. The IED is brought into a safe state and the time is set to the correct value. After the initial setting of the clock, one of three things happens with each of the coming synchronization messages, configured as “fine”:

- If the synchronization message, which is similar to the other messages, from its origin has an offset compared to the internal time in the IED, the message is used directly for synchronization, that is, for adjusting the internal clock to obtain zero offset at the next coming time message.
- If the synchronization message has an offset that is large compared to the other messages, a spike-filter in the IED removes this time-message.
- If the synchronization message has an offset that is large, and the following message also has a large offset, the spike filter does not act and the offset in the synchronization message is compared to a threshold that defaults to 500 milliseconds. If the offset is more than the threshold, the IED is brought into a safe state and the clock is set to the correct time. If the offset is lower than the threshold, the clock is adjusted with 10 000 ppm until the offset is removed. With an adjustment of 10 000 ppm, it takes 50 seconds to remove an offset of 500 milliseconds.

Synchronization messages configured as coarse are only used for initial setting of the time. After this has been done, the messages are checked against the internal time and only an offset of more than 10 seconds resets the time.

Rate accuracy

In the IED, the rate accuracy at cold start is 100 ppm but if the IED is synchronized for a while, the rate accuracy is approximately 1 ppm if the surrounding temperature is constant. Normally, it takes 20 minutes to reach full accuracy.

Time-out on synchronization sources

All synchronization interfaces has a time-out and a configured interface must receive time-messages regularly in order not to give an error signal (TSYNCERR). Normally, the time-out is set so that one message can be lost without getting a TSYNCERR, but if more than one message is lost, a TSYNCERR is given.

16.2.8.3 Synchronization alternatives

Two main alternatives of external time synchronization are available. The synchronization message is applied either via any of the communication ports of the IED as a telegram message including date and time or via IRIG-B.

Synchronization via SNTP

SNTP provides a ping-pong method of synchronization. A message is sent from an IED to an SNTP server, and the SNTP server returns the message after filling in a reception time and a transmission time. SNTP operates via the normal Ethernet network that connects IEDs together in an IEC 61850 network. For SNTP to operate properly, there must be an SNTP server present, preferably in the same station. The SNTP synchronization provides an accuracy that gives +/- 1 ms accuracy for binary inputs. The IED itself can be set as an SNTP-time server.

SNTP server requirements

The SNTP server to be used is connected to the local network, that is not more than 4-5 switches or routers away from the IED. The SNTP server is dedicated for its task, or at least equipped with a real-time operating system, that is not a PC with SNTP server software. The SNTP server should be stable, that is, either synchronized from a stable source like GPS, or local without synchronization. Using a local SNTP server without synchronization as primary or secondary server in a redundant configuration is not recommended.

Synchronization via IRIG-B

IRIG-B is a protocol used only for time synchronization. A clock can provide local time of the year in this format. The “B” in IRIG-B states that 100 bits per second are transmitted, and the message is sent every second. After IRIG-B there numbers stating if and how the signal is modulated and the information transmitted.

To receive IRIG-B there are one dedicated connector for the IRIG-B port. IRIG-B 00x messages can be supplied via the galvanic interface, where x (in 00x) means a number in the range of 1-7.

If the x in 00x is 4, 5, 6 or 7, the time message from IRIG-B contains information of the year. If x is 0, 1, 2 or 3, the information contains only the time within the year, and year information has to come from the tool or local HMI.

The IRIG-B input also takes care of IEEE1344 messages that are sent by IRIG-B clocks, as IRIG-B previously did not have any year information. IEEE1344 is compatible with IRIG-B and contains year information and information of the time-zone.

It is recommended to use IEEE 1344 for supplying time information to the IRIG-B module. In this case, send also the local time in the messages.

Synchronization via DNP

The DNP3 communication can be the source for the coarse time synchronization, while the fine time synchronization needs a source with higher accuracy. See the communication protocol manual for a detailed description of the DNP3 protocol.

Synchronization via IEC60870-5-103

The IEC60870-5-103 communication can be the source for the coarse time synchronization, while the fine tuning of the time synchronization needs a source with higher accuracy. See the communication protocol manual for a detailed description of the IEC60870-5-103 protocol.

16.2.9 Technical data

Table 406: Time synchronization, time tagging

Function	Value
Time tagging resolution, events and sampled measurement values	1 ms
Time tagging error with synchronization once/min (minute pulse synchronization), events and sampled measurement values	± 1.0 ms typically
Time tagging error with SNTP synchronization, sampled measurement values	± 1.0 ms typically

16.3 Parameter setting group handling

16.3.1 Functionality

Use the four different groups of settings to optimize the IED operation for different power system conditions. Creating and switching between fine-tuned setting sets, either from the local HMI or configurable binary inputs, results in a highly adaptable IED that can cope with a variety of power system scenarios.

16.3.2 Setting group handling SETGRPS

16.3.2.1 Identification

Function description	IEC 61850 identification	IEC 60617 identification	ANSI/IEEE C37.2 device number
Setting group handling	SETGRPS	-	-

16.3.2.2 Settings

Table 407: SETGRPS Non group settings (basic)

Name	Values (Range)	Unit	Step	Default	Description
ActiveSetGrp	SettingGroup1 SettingGroup2 SettingGroup3 SettingGroup4	-	-	SettingGroup1	ActiveSettingGroup
MaxNoSetGrp	1 - 4	-	1	1	Max number of setting groups 1-4

16.3.3 Parameter setting groups ACTVGRP

16.3.3.1 Identification

Function description	IEC 61850 identification	IEC 60617 identification	ANSI/IEEE C37.2 device number
Parameter setting groups	ACTVGRP	-	-

16.3.3.2 Function block

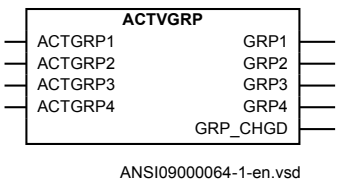

Figure 195: ACTVGRP function block

16.3.3.3 Signals

Table 408: ACTVGRP Input signals

Name	Type	Default	Description
ACTGRP1	BOOLEAN	0	Selects setting group 1 as active
ACTGRP2	BOOLEAN	0	Selects setting group 2 as active
ACTGRP3	BOOLEAN	0	Selects setting group 3 as active
ACTGRP4	BOOLEAN	0	Selects setting group 4 as active

Table 409: ACTVGRP Output signals

Name	Type	Description
GRP1	BOOLEAN	Setting group 1 is active
GRP2	BOOLEAN	Setting group 2 is active
GRP3	BOOLEAN	Setting group 3 is active
GRP4	BOOLEAN	Setting group 4 is active
GRP_CHGD	BOOLEAN	Pulse when setting changed

16.3.3.4 Settings

The function does not have any settings available in Local HMI or Protection and Control IED Manager (PCM600).

16.3.4 Operation principle

Parameter setting groups (ACTVGRP) function has four functional inputs, each corresponding to one of the setting groups stored in the IED. Activation of any of these inputs changes the active setting group. Five functional output signals are available for configuration purposes, so that up to date information on the active setting group is always available.

A setting group is selected by using the local HMI, from a front connected personal computer, remotely from the station control or station monitoring system or by activating the corresponding input to the ACTVGRP function block.

Each input of the function block can be configured to connect to any of the binary inputs in the IED. To do this PCM600 must be used.

The external control signals are used for activating a suitable setting group when adaptive functionality is necessary. Input signals that should activate setting groups must be either permanent or a pulse exceeding 400 ms.

More than one input may be activated at the same time. In such cases the lower order setting group has priority. This means that if for example both group four and group two are set to activate, group two will be the one activated.

Every time the active group is changed, the output signal GRP_CHGD is sending a pulse. This signal is normally connected to a SP16GGIO function block for external communication.

The parameter *MaxNoSetGrp* defines the maximum number of setting groups in use to switch between.

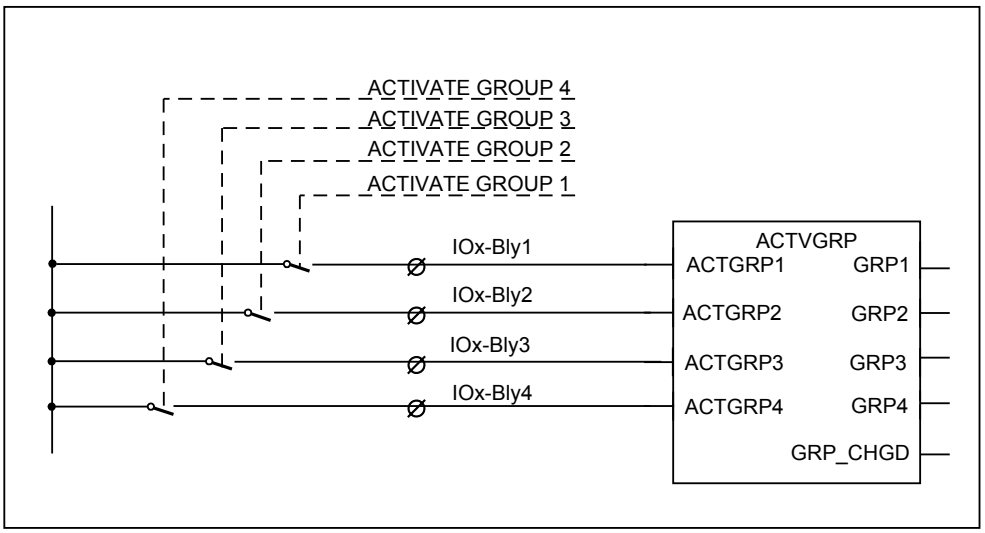

Figure 196: Connection of the function to external circuits

The above example also shows the five output signals, GRP1 to 4 for confirmation of which group that is active, and the GRP_CHGD signal which is normally connected to a SP16GGIO function block for external communication to higher level control systems.

16.4 Test mode functionality TESTMODE

16.4.1 Identification

Function description	IEC 61850 identification	IEC 60617 identification	ANSI/IEEE C37.2 device number
Test mode functionality	TESTMODE	-	-

16.4.2 Functionality

When the Test mode functionality TESTMODE is activated, all the functions in the IED are automatically blocked. It is then possible to unblock every function(s) individually from the local HMI to perform required tests.

When leaving TESTMODE, all blockings are removed and the IED resumes normal operation. However, if during TESTMODE operation, power is removed and later restored, the IED will remain in TESTMODE with the same protection functions blocked or unblocked as before the power was removed. All testing will be done with actually set and configured values within the IED. No settings will be changed, thus mistakes are avoided.

Forcing of binary output signals is only possible when the IED is in test mode.

16.4.3 Function block

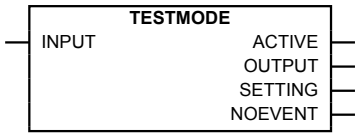

Figure 197: TESTMODE function block

16.4.4 Signals

Table 410: TESTMODE Input signals

Name	Type	Default	Description
INPUT	BOOLEAN	0	Sets terminal in test mode when active

Table 411: TESTMODE Output signals

Name	Type	Description
ACTIVE	BOOLEAN	IED in test mode when active
OUTPUT	BOOLEAN	Test input is active
SETTING	BOOLEAN	Test mode setting is (Enabled) or not (Disabled)
NOEVENT	BOOLEAN	Event disabled during testmode

16.4.5 Settings

Table 412: TESTMODE Non group settings (basic)

Name	Values (Range)	Unit	Step	Default	Description
TestMode	Disabled Enabled	-	-	Disabled	Test mode in operation (Enabled) or not (Disabled)
EventDisable	Disabled Enabled	-	-	Disabled	Event disable during testmode
CmdTestBit	Off On	-	-	Off	Command bit for test required or not during testmode

16.4.6 Operation principle

Put the IED into test mode to test functions in the IED. Set the IED in test mode by

- configuration, activating the input SIGNAL on the function block TESTMODE.
- setting *TestMode* to *Enabled* in the local HMI, under **Main menu/Tests/IED test mode/1:TESTMODE**.

While the IED is in test mode, the ACTIVE of the function block TESTMODE is activated. The other outputs of the function block TESTMODE shows the cause of the "Test mode: *Enabled*" state — input from configuration (OUTPUT output is activated) or setting from local HMI (SETTING output is activated).

While the IED is in test mode, the yellow PICKUP LED will flash and all functions are blocked. Any function can be unblocked individually regarding functionality and event signalling.

Forcing of binary output signals is only possible when the IED is in test mode.

Most of the functions in the IED can individually be blocked by means of settings from the local HMI. To enable these blockings the IED must be set in test mode (output ACTIVE is activated). When leaving the test mode, that is entering normal mode, these blockings are disabled and everything is reset to normal operation. All testing will be done with actually set and configured values within the IED. No settings will be changed, thus no mistakes are possible.

The blocked functions will still be blocked next time entering the test mode, if the blockings were not reset.

The blocking of a function concerns all output signals from the actual function, so no outputs will be activated.

When a binary input is used to set the IED in test mode and a parameter, that requires restart of the application, is changed, the IED will re-enter test mode and all functions will be blocked, also functions that were unblocked before the change. During the re-entering to test mode, all functions will be temporarily unblocked for a short time, which might lead to unwanted operations. This is only valid if the IED is put in TEST mode by a binary input, not by local HMI.

The TESTMODE function block might be used to automatically block functions when a test handle is inserted in a test switch. A contact in the test switch (RTXP24 contact 29-30) or an FT switch finger can supply a binary input which in turn is configured to the TESTMODE function block.

Each of the functions includes the blocking from the TESTMODE function block.

The functions can also be blocked from sending events over IEC 61850 station bus to prevent filling station and SCADA databases with test events, for example during a maintenance test.

16.5 Change lock function CHNGLCK

16.5.1 Identification

Function description	IEC 61850 identification	IEC 60617 identification	ANSI/IEEE C37.2 device number
Change lock function	CHNGLCK	-	-

16.5.2 Functionality

Change lock function (CHNGLCK) is used to block further changes to the IED configuration and settings once the commissioning is complete. The purpose is to block inadvertent IED configuration changes beyond a certain point in time.

When CHNGLCK has a logical one on its input, then all attempts to modify the IED configuration and setting will be denied and the message "Error: Changes blocked" will be displayed on the local HMI; in PCM600 the message will be "Operation denied by active ChangeLock". The CHNGLCK function should be configured so that it is controlled by a signal from a binary input card. This guarantees that by setting that signal to a logical zero, CHNGLCK is deactivated. If any logic is included in the signal path to the CHNGLCK input, that logic must be designed so that it cannot permanently issue a logical one to the CHNGLCK input. If such a situation would occur in spite of these precautions, then please contact the local ABB representative for remedial action.

16.5.3 Function block

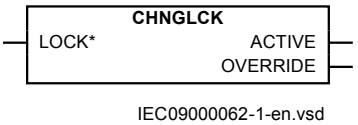

Figure 198: CHNGLCK function block

16.5.4 Signals

Table 413: CHNGLCK Input signals

Name	Type	Default	Description
LOCK	BOOLEAN	0	Activate change lock

Table 414: CHNGLCK Output signals

Name	Type	Description
ACTIVE	BOOLEAN	Change lock active
OVERRIDE	BOOLEAN	Change lock override

16.5.5 Settings

The function does not have any parameters available in Local HMI or Protection and Control IED Manager (PCM600)

16.5.6 Operation principle

The Change lock function (CHNGLCK) is configured using ACT.

The function, when activated, will still allow the following changes of the IED state that does not involve reconfiguring of the IED:

- Monitoring
- Reading events
- Resetting events
- Reading disturbance data
- Clear disturbances
- Reset LEDs
- Reset counters and other runtime component states
- Control operations

- Set system time
- Enter and exit from test mode
- Change of active setting group

The binary input signal LOCK controlling the function is defined in ACT or SMT:

Binary input	Function
1	Activated
0	Deactivated

16.6 IED identifiers TERMINALID

16.6.1 Identification

Function description	IEC 61850 identification	IEC 60617 identification	ANSI/IEEE C37.2 device number
IED identifiers	TERMINALID	-	-

16.6.2 Functionality

IED identifiers (TERMINALID) function allows the user to identify the individual IED in the system, not only in the substation, but in a whole region or a country.

Use only characters A-Z, a-z and 0-9 in station, object and unit names.

16.6.3 Settings

Table 415: TERMINALID Non group settings (basic)

Name	Values (Range)	Unit	Step	Default	Description
StationName	0 - 18	-	1	Station name	Station name
StationNumber	0 - 99999	-	1	0	Station number
ObjectName	0 - 18	-	1	Object name	Object name
ObjectNumber	0 - 99999	-	1	0	Object number

Table continues on next page

Name	Values (Range)	Unit	Step	Default	Description
UnitName	0 - 18	-	1	Unit name	Unit name
UnitNumber	0 - 99999	-	1	0	Unit number
TechnicalKey	0 - 18	-	1	AA0J0Q0A0	Technical key

16.7 Product information

16.7.1 Identification

Function description	IEC 61850 identification	IEC 60617 identification	ANSI/IEEE C37.2 device number
Product information	PRODINF	-	-

16.7.2 Functionality

The Product identifiers function identifies the IED. The function has seven pre-set, settings that are unchangeable but nevertheless very important:

- IEDProdType
- ProductVer
- ProductDef
- SerialNo
- OrderingNo
- ProductionDate

The settings are visible on the local HMI , under **Main menu/Diagnostics/IED status/ Product identifiers**

They are very helpful in case of support process (such as repair or maintenance).

16.7.3 Settings

The function does not have any parameters available in the local HMI or PCM600.

16.8 Primary system values PRIMVAL

16.8.1 Identification

Function description	IEC 61850 identification	IEC 60617 identification	ANSI/IEEE C37.2 device number
Primary system values	PRIMVAL	-	-

16.8.2 Functionality

The rated system frequency and phasor rotation are set under **Main menu/ Configuration/ Power system/ Primary values/PRIMVAL** in the local HMI and PCM600 parameter setting tree.

16.8.3 Settings

Table 416: PRIMVAL Non group settings (basic)

Name	Values (Range)	Unit	Step	Default	Description
Frequency	50.0 - 60.0	Hz	10.0	50.0	Rated system frequency
PhaseRotation	Normal=ABC Inverse=ACB	-	-	Normal=ABC	System phase rotation

16.9 Signal matrix for analog inputs SMAI

16.9.1 Functionality

Signal matrix for analog inputs function (SMAI), also known as the preprocessor function, processes the analog signals connected to it and gives information about all aspects of the analog signals connected, like the RMS value, phase angle, frequency, harmonic content, sequence components and so on. This information is then used by the respective functions in ACT (for example protection, measurement or monitoring).

The SMAI function is used within PCM600 in direct relation with the Signal Matrix tool or the Application Configuration tool.

The SMAI function blocks for the 650 series of products are possible to set for two cycle times either 5 or 20ms. The function blocks connected

to a SMAI function block shall always have the same cycle time as the SMAI block.

16.9.2 Identification

Function description	IEC 61850 identification	IEC 60617 identification	ANSI/IEEE C37.2 device number
Signal matrix for analog inputs	SMAI_20_x	-	-

16.9.3 Function block

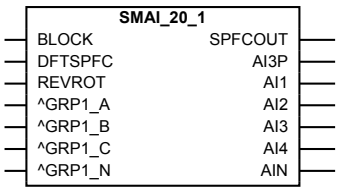

Figure 199: SMAI_20_1 function block

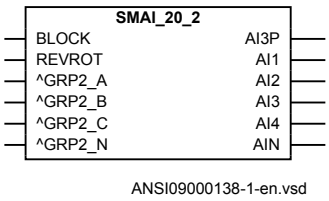

Figure 200: SMAI_20_2 to SMAI_20_12 function block

Note that input and output signals on SMAI_20_2 to SMAI_20_12 are the same except for input signals GRPx_A to GRPx_N where x is equal to instance number (2 to 12).

16.9.4 Signals

Table 417: SMAI_20_1 Input signals

Name	Type	Default	Description
BLOCK	BOOLEAN	0	Block group 1
DFTSPFC	REAL	20.0	Number of samples per fundamental cycle used for DFT calculation
REVROT	BOOLEAN	0	Reverse rotation group 1
GRP1_A	STRING	-	First analog input used for phase L1 or L1-L2 quantity
GRP1_B	STRING	-	Second analog input used for phase B or BC quantity
GRP1_C	STRING	-	Third analog input used for phase C or CA quantity
GRP1_N	STRING	-	Fourth analog input used for residual or neutral quantity

Table 418: SMAI_20_1 Output signals

Name	Type	Description
SPFCOUT	REAL	Number of samples per fundamental cycle from internal DFT reference function
AI3P	GROUP SIGNAL	Grouped three phase signal containing data from inputs 1-4
AI1	GROUP SIGNAL	Quantity connected to the first analog input
AI2	GROUP SIGNAL	Quantity connected to the second analog input
AI3	GROUP SIGNAL	Quantity connected to the third analog input
AI4	GROUP SIGNAL	Quantity connected to the fourth analog input
AIN	GROUP SIGNAL	Calculated residual quantity if inputs 1-3 are connected

Table 419: SMAI_20_12 Input signals

Name	Type	Default	Description
BLOCK	BOOLEAN	0	Block group 12
REVROT	BOOLEAN	0	Reverse rotation group 12
GRP12_A	STRING	-	First analog input used for phase L1 or L1-L2 quantity
GRP12_B	STRING	-	Second analog input used for phase B or BC quantity
GRP12_C	STRING	-	Third analog input used for phase C or CA quantity
GRP12_N	STRING	-	Fourth analog input used for residual or neutral quantity

Table 420: SMAI_20_12 Output signals

Name	Type	Description
AI3P	GROUP SIGNAL	Grouped three phase signal containing data from inputs 1-4
AI1	GROUP SIGNAL	Quantity connected to the first analog input
AI2	GROUP SIGNAL	Quantity connected to the second analog input
AI3	GROUP SIGNAL	Quantity connected to the third analog input
AI4	GROUP SIGNAL	Quantity connected to the fourth analog input
AIN	GROUP SIGNAL	Calculated residual quantity if inputs 1-3 are connected

16.9.5 Settings

Table 421: SMAI_20_1 Non group settings (basic)

Name	Values (Range)	Unit	Step	Default	Description
GlobalBaseSel	1 - 6	-	1	1	Selection of one of the Global Base Value groups
DFTRefExtOut	InternalDFTRef DFTRefGrp1 DFTRefGrp2 DFTRefGrp3 DFTRefGrp4 DFTRefGrp5 DFTRefGrp6 DFTRefGrp7 DFTRefGrp8 DFTRefGrp9 DFTRefGrp10 DFTRefGrp11 DFTRefGrp12 External DFT ref	-	-	InternalDFTRef	DFT reference for external output
DFTReference	InternalDFTRef DFTRefGrp1 DFTRefGrp2 DFTRefGrp3 DFTRefGrp4 DFTRefGrp5 DFTRefGrp6 DFTRefGrp7 DFTRefGrp8 DFTRefGrp9 DFTRefGrp10 DFTRefGrp11 DFTRefGrp12 External DFT ref	-	-	InternalDFTRef	DFT reference
ConnectionType	Ph-N Ph-Ph	-	-	Ph-N	Input connection type
AnalogInputType	Voltage Current	-	-	Voltage	Analog input signal type

Table 422: SMAI_20_1 Non group settings (advanced)

Name	Values (Range)	Unit	Step	Default	Description
Negation	Disabled NegateN Negate3Ph Negate3Ph+N	-	-	Disabled	Negation
MinValFreqMeas	5 - 200	%	1	10	Limit for frequency calculation in % of VBase

Even if the *AnalogInputType* setting of a SMAI block is set to *Current*, the *MinValFreqMeas* setting is still visible. This means that the minimum level for current amplitude is based on *VBase*. For example, if *VBase* is 20000, the minimum amplitude for current is 20000 * 10% = 2000. This has practical affect only if the current measuring SMAI is used as a frequency reference for the adaptive DFT. This is not recommended, see the Setting guidelines.

Table 423: SMAI_20_12 Non group settings (basic)

Name	Values (Range)	Unit	Step	Default	Description
GlobalBaseSel	1 - 6	-	1	1	Selection of one of the Global Base Value groups
DFTReference	InternalDFTRef DFTRefGrp1 DFTRefGrp2 DFTRefGrp3 DFTRefGrp4 DFTRefGrp5 DFTRefGrp6 DFTRefGrp7 DFTRefGrp8 DFTRefGrp9 DFTRefGrp10 DFTRefGrp11 DFTRefGrp12 External DFT ref	-	-	InternalDFTRef	DFT reference
ConnectionType	Ph-N Ph-Ph	-	-	Ph-N	Input connection type
AnalogInputType	Voltage Current	-	-	Voltage	Analog input signal type

Table 424: SMAI_20_12 Non group settings (advanced)

Name	Values (Range)	Unit	Step	Default	Description
Negation	Disabled NegateN Negate3Ph Negate3Ph+N	-	-	Disabled	Negation
MinValFreqMeas	5 - 200	%	1	10	Limit for frequency calculation in % of VBase

Even if the *AnalogInputType* setting of a SMAI block is set to *Current*, the *MinValFreqMeas* setting is still visible. This means that the minimum level for current amplitude is based on *VBase*. For example, if *VBase* is 20000, the minimum amplitude for current is 20000 * 10% = 2000. This has practical affect only if the current measuring SMAI is used as a frequency reference for the adaptive DFT. This is not recommended, see the Setting guidelines.

16.9.6 Operation principle

Every SMAI can receive four analog signals (three phases and one neutral value), either voltage or current. The *AnalogInputType* setting should be set according to the input connected. The signal received by SMAI is processed internally and in total 244 different electrical parameters are obtained for example RMS value, peak-to-peak, frequency and so on. The activation of BLOCK input resets all outputs to 0.

SMAI_20 does all the calculation based on nominal 20 samples per line frequency period, this gives a sample frequency of 1 kHz at 50 Hz nominal line frequency and 1.2 kHz at 60 Hz nominal line frequency.

The output signals AI1...AI4 in SMAI_20_x function block are direct outputs of the connected input signals GRPx_A, GRPx_B, GRPx_C and GRPx_N. GRPx_N is always the neutral current. If GRPx_N is not connected, the output AI4 is zero. The AIN output is the calculated residual quantity, obtained as a sum of inputs GRPx_A, GRPx_B and GRPx_C but is equal to output AI4 if GRPx_N is connected. The outputs signal AI1, AI2, AI3 and AIN are normally connected to the analog disturbance recorder.

The SMAI function block always calculates the residual quantities in case only the three phases (Ph-N) are connected (GRPx_N input not used).

The output signal AI3P in the SMAI function block is a group output signal containing all processed electrical information from inputs GRPx_A, GRPx_B, GRPx_C and GRPx_N. Applications with a few exceptions shall always be connected to AI3P.

The input signal REVROT is used to reverse the phase order.

A few points need to be ensured for SMAI to process the analog signal correctly.

- It is not mandatory to connect all the inputs of SMAI function. However, it is very important that same set of three phase analog signals should be connected to one SMAI function.
- The sequence of input connected to SMAI function inputs GRPx_A, GRPx_B, GRPx_C and GRPx_N should normally represent phase A, phase B, phase C and neutral currents respectively.
- It is possible to connect analog signals available as *Ph-N* or *Ph-Ph* to SMAI. *ConnectionType* should be set according to the input connected.
- If the GRPx_N input is not connected and all three phase-to-ground inputs are connected, SMAI calculates the neutral input on its own and it is available at the AI3P and AIN outputs. It is necessary that the *ConnectionType* should be set to *Ph-N*.
- If any two phase-to-ground inputs and neutral currents are connected, SMAI calculates the remaining third phase-to-neutral input on its own and it is available at the AI3P output. It is necessary that the *ConnectionType* should be set to *Ph-N*.
- If any two phase-to-phase inputs are connected, SMAI calculates the remaining third phase-to-phase input on its own. It is necessary that the *ConnectionType* should be set to *Ph-Ph*.
- All three inputs GRPx_x should be connected to SMAI for calculating sequence components for *ConnectionType* set to *Ph-N*.
- At least two inputs GRPx_x should be connected to SMAI for calculating the positive and negative sequence component for *ConnectionType* set to *Ph-Ph*. Calculation of zero sequence requires GRPx_N input to be connected.
- Negation setting inverts (reverse) the polarity of the analog input signal. It is recommended that use of this setting is done with care, mistake in setting may lead to maloperation of directional functions.

Frequency adaptivity

SMAI function performs DFT calculations for obtaining various electrical parameters. DFT uses some reference frequency for performing calculations. For most of the cases, these calculations are done using a fixed DFT reference based on system frequency. However, if the frequency of the network is expected to vary more than 2 Hz from the nominal frequency, more accurate DFT results can be obtained if the adaptive DFT is used. This means that the frequency of the network is tracked and the DFT calculation is adapted according to that.

DFTRefExtOut and *DFTReference* need to be set appropriately for adaptive DFT calculations.

DFTRefExtOut: Setting valid only for the instance of function block SMAI_20_1. It decides the reference block for external output SPFCOUT.

DFTReference: Reference DFT for the block. This setting decides DFT reference for DFT calculations. *DFTReference* set to *InternalDFTRef* uses fixed DFT reference

based on the set system frequency. *DFTReference* set to *DFTRefGrpX* uses DFT reference from the selected group block, when own group selected adaptive DFT reference will be used based on the calculated signal frequency from own group. *DFTReference* set to *External DFT Ref* will use reference based on input signal DFTSPFC.

Settings *DFTRefExtOut* and *DFTReference* shall be set to default value *InternalDFTRef* if no VT inputs are available. However, if it is necessary to use frequency adaptive DFT (*DFTReference* set to other than default, referring current measuring SMAI) when no voltages are available, note that the *MinValFreqMeas* setting is still set in reference to *VBase* (of the selected GBASVAL group). This means that the minimum level for the current amplitude is based on *VBase*. For example, if *VBase* is 20000, the resulting minimum amplitude for current is 20000 * 10% = 2000.

MinValFreqMeas: The minimum value of the voltage for which the frequency is calculated, expressed as percent of the voltage in the selected Global Base voltage group (GBASVAL:n, where 1<n<6).

Below example shows a situation with adaptive frequency tracking with one reference selected for all instances. In practice each instance can be adapted to the needs of the actual application.

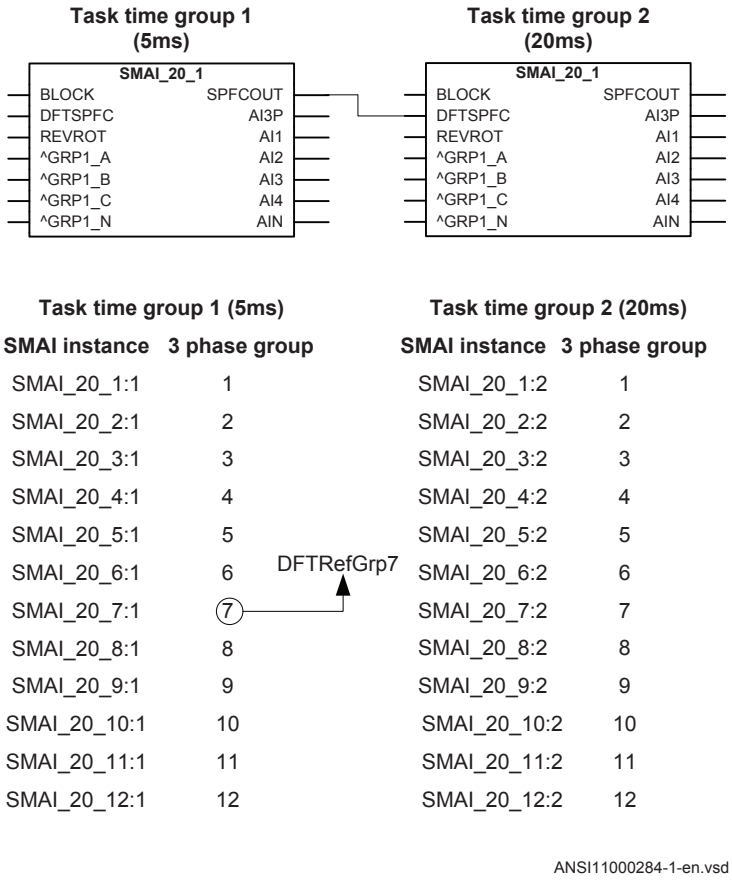

Figure 201: Configuration for using an instance in task time group 1 as DFT reference

Assume instance SMAI_20_7:1 in task time group 1 has been selected in the configuration to control the frequency tracking (For the SMAI_20_x task time groups). Note that the selected reference instance must be a voltage type.

For task time group 1 this gives the following settings:

For SMAI_20_1:1

DFTRefExtOut set to *DFTRefGrp7* so as to route SMAI_20_7:1 reference to the SPFCOUT output, *DFTReference* set to *DFTRefGrp7* so that SMAI_20_7:1 is used as reference.

For SMAI_20_2:1 to SMAI_20_12:1

DFTReference set to *DFTRefGrp7* so that SMAI_20_7:1 is used as reference.

For task time group 2 this gives the following settings:

For SMAI_20_1:2 to SMAI_20_12:2

DFTReference set to *External DFT ref* to use DFTSPFC input as reference.

16.10 Summation block 3 phase 3PHSUM

16.10.1 Identification

Function description	IEC 61850 identification	IEC 60617 identification	ANSI/IEEE C37.2 device number
Summation block 3 phase	3PHSUM	-	-

16.10.2 Functionality

Summation block 3 phase function 3PHSUM is used to get the sum of two sets of three-phase analog signals (of the same type) for those IED functions that might need it.

16.10.3 Function block

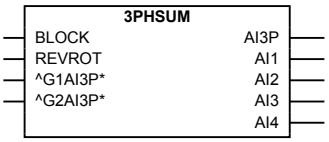

Figure 202: 3PHSUM function block

16.10.4 Signals

Table 425: 3PHSUM Input signals

Name	Type	Default	Description
BLOCK	BOOLEAN	0	Block
REVROT	BOOLEAN	0	Reverse rotation
G1AI3P	GROUP SIGNAL	-	Group 1 three phase analog input from first SMAI
G2AI3P	GROUP SIGNAL	-	Group 2 three phase analog input from second SMAI

Table 426: 3PHSUM Output signals

Name	Type	Description
AI3P	GROUP SIGNAL	Linear combination of two connected three phase inputs
AI1	GROUP SIGNAL	Linear combination of input 1 signals from both SMAI blocks
AI2	GROUP SIGNAL	Linear combination of input 2 signals from both SMAI blocks
AI3	GROUP SIGNAL	Linear combination of input 3 signals from both SMAI blocks
AI4	GROUP SIGNAL	Linear combination of input 4 signals from both SMAI blocks

16.10.5 Settings

Table 427: 3PHSUM Non group settings (basic)

Name	Values (Range)	Unit	Step	Default	Description
GlobalBaseSel	1 - 6	-	1	1	Selection of one of the Global Base Value groups
SummationType	Group1+Group2 Group1-Group2 Group2-Group1 -(Group1+Group2)	-	-	Group1+Group2	Summation type
DFTReference	InternalDFTRef DFTRefGrp1 External DFT ref	-	-	InternalDFTRef	DFT reference

Table 428: 3PHSUM Non group settings (advanced)

Name	Values (Range)	Unit	Step	Default	Description
FreqMeasMinVal	5 - 200	%	1	10	Magnitude limit for frequency calculation in % of Vbase

16.10.6 Operation principle

Summation block 3 phase 3PHSUM receives the three-phase signals from Signal matrix for analog inputs function (SMAI). In the same way, the BLOCK input will reset all the outputs of the function to 0.

16.11 Global base values GBASVAL

16.11.1 Identification

Function description	IEC 61850 identification	IEC 60617 identification	ANSI/IEEE C37.2 device number
Global base values	GBASVAL	-	-

16.11.2 Functionality

Global base values function (GBASVAL) is used to provide global values, common for all applicable functions within the IED. One set of global values consists of values for current, voltage and apparent power and it is possible to have six different sets.

This is an advantage since all applicable functions in the IED use a single source of base values. This facilitates consistency throughout the IED and also facilitates a single point for updating values when necessary.

Each applicable function in the IED has a parameter, *GlobalBaseSel*, defining one out of the six sets of GBASVAL functions.

16.11.3 Settings

Table 429: GBASVAL Non group settings (basic)

Name	Values (Range)	Unit	Step	Default	Description
VBase	0.05 - 1000.00	kV	0.05	132.00	Global base voltage
IBase	1 - 50000	A	1	1000	Global base current
SBase	0.050 - 5000.000	MVA	0.001	229.000	Global base apparent power

16.12 Authority check ATHCHCK

16.12.1 Identification

Function description	IEC 61850 identification	IEC 60617 identification	ANSI/IEEE C37.2 device number
Authority check	ATHCHCK	-	-

16.12.2 Functionality

To safeguard the interests of our customers, both the IED and the tools that are accessing the IED are protected, by means of authorization handling. The authorization handling of the IED and the PCM600 is implemented at both access points to the IED:

- local, through the local HMI
- remote, through the communication ports

16.12.3 Settings

The function does not have any parameters available in Local HMI or Protection and Control IED Manager (PCM600).

16.12.4 Operation principle

There are different levels (or types) of users that can access or operate different areas of the IED and tools functionality. The pre-defined user types are given in Table 430.

Table 430: Pre-defined user types

User type	Access rights
SystemOperator	Control from local HMI, no bypass
ProtectionEngineer	All settings
DesignEngineer	Application configuration (including SMT, GDE and CMT)
UserAdministrator	User and password administration for the IED

The IED users can be created, deleted and edited only with the IED User Management within PCM600. The user can only LogOn or LogOff on the local HMI on the IED, there are no users, groups or functions that can be defined on local HMI.

Only characters A - Z, a - z and 0 - 9 should be used in user names and passwords.
The maximum of characters in a password is 12.

At least one user must be included in the UserAdministrator group to be able to write users, created in PCM600, to IED.

16.12.4.1 Authorization handling in the IED

At delivery the default user is the SuperUser. No Log on is required to operate the IED until a user has been created with the IED User Management..

Once a user is created and written to the IED, that user can perform a Log on, using the password assigned in the tool. Then the default user will be Guest.

If there is no user created, an attempt to log on will display a message box: “No user defined!”

If one user leaves the IED without logging off, then after the timeout (set in **Main menu/Configuration/HMI/Screen/1:SCREEN**) elapses, the IED returns to Guest state, when only reading is possible. By factory default, the display timeout is set to 60 minutes.

If one or more users are created with the IED User Management and written to the IED, then, when a user attempts a Log on by pressing the key or when the user attempts to perform an operation that is password protected, the Log on window opens.

The cursor is focused on the User identity field, so upon pressing the key, one can change the user name, by browsing the list of users, with the “up” and “down” arrows. After choosing the right user name, the user must press the key again. When it comes to password, upon pressing the key, the following characters will show up: “✳✳✳✳✳✳✳✳”. The user must scroll for every letter in the password. After all the letters are introduced (passwords are case sensitive) choose OK and press the key again.

At successful Log on, the local HMI shows the new user name in the status bar at the bottom of the LCD. If the Log on is OK, when required to change for example a password protected setting, the local HMI returns to the actual setting folder. If the Log on has failed, an "Error Access Denied" message opens. If a user enters an incorrect password three times, that user will be blocked for ten minutes before a new attempt to log in can be performed. The user will be blocked from logging in, both from the local HMI and PCM600. However, other users are to log in during this period.

16.13 Authority status ATHSTAT

16.13.1 Identification

Function description	IEC 61850 identification	IEC 60617 identification	ANSI/IEEE C37.2 device number
Authority status	ATHSTAT	-	-

16.13.2 Functionality

Authority status (ATHSTAT) function is an indication function block for user log-on activity.

16.13.3 Function block

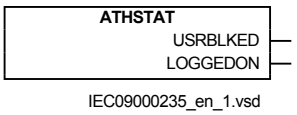

Figure 203: ATHSTAT function block

16.13.4 Signals

Table 431: ATHSTAT Output signals

Name	Type	Description
USRBLKED	BOOLEAN	At least one user is blocked by invalid password
LOGGEDON	BOOLEAN	At least one user is logged on

16.13.5 Settings

The function does not have any parameters available in Local HMI or Protection and Control IED Manager (PCM600)

16.13.6 Operation principle

Authority status (ATHSTAT) function informs about two events related to the IED and the user authorization:

- the fact that at least one user has tried to log on wrongly into the IED and it was blocked (the output USRBLKED)
- the fact that at least one user is logged on (the output LOGGEDON)

Whenever one of the two events occurs, the corresponding output (USRBLKED or LOGGEDON) is activated.

16.14 Denial of service

16.14.1 Functionality

The Denial of service functions (DOSLAN1 and DOSFRNT) are designed to limit overload on the IED produced by heavy Ethernet network traffic. The communication facilities must not be allowed to compromise the primary functionality of the device. All inbound network traffic will be quota controlled so that too heavy network loads can be controlled. Heavy network load might for instance be the result of malfunctioning equipment connected to the network.

16.14.2 Denial of service, frame rate control for front port DOSFRNT

16.14.2.1 Identification

Function description	IEC 61850 identification	IEC 60617 identification	ANSI/IEEE C37.2 device number
Denial of service, frame rate control for front port	DOSFRNT	-	-

16.14.2.2 Function block

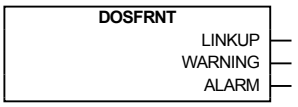

Figure 204: DOSFRNT function block

16.14.2.3 Signals

Table 432: DOSFRNT Output signals

Name	Type	Description
LINKUP	BOOLEAN	Ethernet link status
WARNING	BOOLEAN	Frame rate is higher than normal state
ALARM	BOOLEAN	Frame rate is higher than throttle state

16.14.2.4 Settings

The function does not have any parameters available in the local HMI or PCM600.

16.14.2.5 Monitored data

Table 433: DOSFRNT Monitored data

Name	Type	Values (Range)	Unit	Description
State	INTEGER	0=Off 1=Normal 2=Throttle 3=DiscardLow 4=DiscardAll 5=StopPoll	-	Frame rate control state
Quota	INTEGER	-	%	Quota level in percent 0-100
IPPackRecNorm	INTEGER	-	-	Number of IP packets received in normal mode
IPPackRecPoll	INTEGER	-	-	Number of IP packets received in polled mode
IPPackDisc	INTEGER	-	-	Number of IP packets discarded
NonIPPackRecNorm	INTEGER	-	-	Number of non IP packets received in normal mode
NonIPPackRecPoll	INTEGER	-	-	Number of non IP packets received in polled mode
NonIPPackDisc	INTEGER	-	-	Number of non IP packets discarded

16.14.3 Denial of service, frame rate control for LAN1 port DOSLAN1

16.14.3.1 Identification

Function description	IEC 61850 identification	IEC 60617 identification	ANSI/IEEE C37.2 device number
Denial of service, frame rate control for LAN1 port	DOSLAN1	-	-

16.14.3.2 Function block

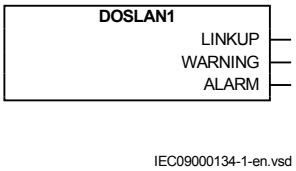

Figure 205: DOSLAN1 function block

16.14.3.3 Signals

Table 434: DOSLAN1 Output signals

Name	Type	Description
LINKUP	BOOLEAN	Ethernet link status
WARNING	BOOLEAN	Frame rate is higher than normal state
ALARM	BOOLEAN	Frame rate is higher than throttle state

16.14.3.4 Settings

The function does not have any parameters available in the local HMI or PCM600.

16.14.3.5 Monitored data

Table 435: DOSLAN1 Monitored data

Name	Type	Values (Range)	Unit	Description
State	INTEGER	0=Off 1=Normal 2=Throttle 3=DiscardLow 4=DiscardAll 5=StopPoll	-	Frame rate control state
Quota	INTEGER	-	%	Quota level in percent 0-100
IPPackRecNorm	INTEGER	-	-	Number of IP packets received in normal mode
IPPackRecPoll	INTEGER	-	-	Number of IP packets received in polled mode
IPPackDisc	INTEGER	-	-	Number of IP packets discarded

Table continues on next page

Name	Type	Values (Range)	Unit	Description
NonIPPackRecNorm	INTEGER	-	-	Number of non IP packets received in normal mode
NonIPPackRecPoll	INTEGER	-	-	Number of non IP packets received in polled mode
NonIPPackDisc	INTEGER	-	-	Number of non IP packets discarded

16.14.4 Operation principle

The Denial of service functions (DOSLAN1 and DOSFRNT) measures the IED load from communication and, if necessary, limit it for not jeopardizing the IEDs control and protection functionality due to high CPU load. The function has the following outputs:

- LINKUP indicates the Ethernet link status
- WARNING indicates that communication (frame rate) is higher than normal
- ALARM indicates that the IED limits communication

Section 17 IED physical connections

17.1 Protective ground connections

The IED shall be grounded with a 6 Gauge flat copper cable.

The ground lead should be as short as possible, less than 59.06 inches (1500 mm). Additional length is required for door mounting.

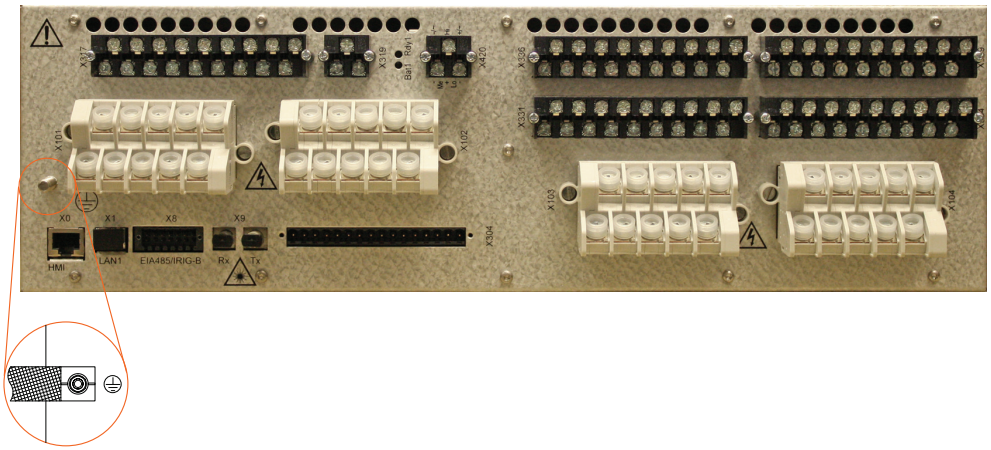

Figure 206: The protective ground pin is located to the left of connector X101 on the 3U full 19" case

17.2 Inputs

17.2.1 Measuring inputs

Table 436: Analog input modules

Terminal	TRM 6I + 4U	TRM 8I + 2U	TRM 4I + 1I + 5U	TRM 4I + 6U	AIM 6I + 4U	AIM 4I + 1I + 5U
X101-1, 2	1/5A	1/5A	1/5A	1/5A	1/5A	1/5A
X101-3, 4	1/5A	1/5A	1/5A	1/5A	1/5A	1/5A
X101-5, 6	1/5A	1/5A	1/5A	1/5A	1/5A	1/5A
X101-7, 8	1/5A	1/5A	1/5A	1/5A	1/5A	1/5A
X101-9, 10	1/5A	1/5A	0.1/0.5A	100/220V	1/5A	0.1/0.5A
X102-1, 2	1/5A	1/5A	100/220V	100/220V	1/5A	100/220V
X102-3, 4	100/220V	1/5A	100/220V	100/220V	100/220V	100/220V
X102-5, 6	100/220V	1/5A	100/220V	100/220V	100/220V	100/220V
X102-7, 8	100/220V	100/220V	100/220V	100/220V	100/220V	100/220V
X102-9, 10	100/220V	100/220V	100/220V	100/220V	100/220V	100/220V

See the connection diagrams for information on the analog input module variant included in a particular configured IED. The primary and secondary rated values of the primary VT's and CT's are set for the analog inputs of the IED.

17.2.2 Auxiliary supply voltage input

The auxiliary voltage of the IED is connected to terminals X420-1 and X420-2/3. The terminals used depend on the power supply.

The permitted auxiliary voltage range of the IED is marked on top of the IED's LHMI.

Table 437: Auxiliary voltage supply of 110...250 V DC or 100...240 V AC

Case	Terminal	Description
3U half 19”	X420-1	- Input
	X420-3	+ Input

Table 438: Auxiliary voltage supply of 48-125 V DC

Case	Terminal	Description
3U full 19”	X420-1	- Input
	X420-2	+ Input

17.2.3 Binary inputs

The binary inputs can be used, for example, to generate a blocking signal, to unlatch output contacts, to trigger the digital fault recorder or for remote control of IED settings.

Each signal connector terminal is connected with one 14 or 16 Gauge wire.

Table 439: Binary inputs X304, 3U full 19”

Terminal	Description	PCM600 info	
		Hardware module instance	Hardware channel
X304-1	Common - for inputs 1-3		
X304-2	Binary input 1 +	COM_101	BI1
X304-3	Binary input 2 +	COM_101	BI2
X304-4	Binary input 3 +	COM_101	BI3
X304-5	Common - for inputs 4-6		
X304-6	Binary input 4 +	COM_101	BI4
X304-7	Binary input 5 +	COM_101	BI5
X304-8	Binary input 6 +	COM_101	BI6
X304-9	Common - for inputs 7-9		
X304-10	Binary input 7 +	COM_101	BI7
X304-11	Binary input 8 +	COM_101	BI8
X304-12	Binary input 9 +	COM_101	BI9
X304-13	Common - for inputs 10-12		
X304-14	Binary input 10 +	COM_101	BI10
X304-15	Binary input 11 +	COM_101	BI11
X304-16	Binary input 12 +	COM_101	BI12

Table 440: Binary inputs X324, 3U full 19"

Terminal	Description	PCM600 info	
		Hardware module instance	Hardware channel
X324-1	- for input 1	BIO_3	BI1
X324-2	Binary input 1 +	BIO_3	BI1
X324-3	-		
X324-4	Common - for inputs 2-3		
X324-5	Binary input 2 +	BIO_3	BI2
X324-6	Binary input 3 +	BIO_3	BI3
X324-7	-		
X324-8	Common - for inputs 4-5		
X324-9	Binary input 4 +	BIO_3	BI4
X324-10	Binary input 5 +	BIO_3	BI5
X324-11	-		
X324-12	Common - for inputs 6-7		
X324-13	Binary input 6 +	BIO_3	BI6
X324-14	Binary input 7 +	BIO_3	BI7
X324-15	-		
X324-16	Common - for inputs 8-9		
X324-17	Binary input 8 +	BIO_3	BI8
X324-18	Binary input 9 +	BIO_3	BI9

Table 441: Binary inputs X329, 3U full 19"

Terminal	Description	PCM600 info	
		Hardware module instance	Hardware channel
X329-1	- for input 1	BIO_4	BI1
X329-2	Binary input 1 +	BIO_4	BI1
X329-3	-		
X329-4	Common - for inputs 2-3		
X329-5	Binary input 2 +	BIO_4	BI2
X329-6	Binary input 3 +	BIO_4	BI3
X329-7	-		
X329-8	Common - for inputs 4-5		
X329-9	Binary input 4 +	BIO_4	BI4
X329-10	Binary input 5 +	BIO_4	BI5
X329-11	-		

Table continues on next page

Terminal	Description	PCM600 info	
		Hardware module instance	Hardware channel
X329-12	Common - for inputs 6-7		
X329-13	Binary input 6 +	BIO_4	BI6
X329-14	Binary input 7 +	BIO_4	BI7
X329-15	-		
X329-16	Common - for inputs 8-9		
X329-17	Binary input 8 +	BIO_4	BI8
X329-18	Binary input 9 +	BIO_4	BI9

Table 442: Binary inputs X334, 3U full 19"

Terminal	Description	PCM600 info	
		Hardware module instance	Hardware channel
X334-1	- for input 1	BIO_5	BI1
X334-2	Binary input 1 +	BIO_5	BI1
X334-3	-		
X334-4	Common - for inputs 2-3		
X334-5	Binary input 2 +	BIO_5	BI2
X334-6	Binary input 3 +	BIO_5	BI3
X334-7	-		
X334-8	Common - for inputs 4-5		
X334-9	Binary input 4 +	BIO_5	BI4
X334-10	Binary input 5 +	BIO_5	BI5
X334-11	-		
X334-12	Common - for inputs 6-7		
X334-13	Binary input 6 +	BIO_5	BI6
X334-14	Binary input 7 +	BIO_5	BI7
X334-15	-		
X334-16	Common - for inputs 8-9		
X334-17	Binary input 8 +	BIO_5	BI8
X334-18	Binary input 9 +	BIO_5	BI9

Table 443: Binary inputs X339, 3U full 19"

Terminal	Description	PCM600 info	
		Hardware module instance	Hardware channel
X339-1	- for input 1	BIO_6	BI1
X339-2	Binary input 1 +	BIO_6	BI1
X339-3	-		
X339-4	Common - for inputs 2-3		
X339-5	Binary input 2 +	BIO_6	BI2
X339-6	Binary input 3 +	BIO_6	BI3
X339-7	-		
X339-8	Common - for inputs 4-5		
X339-9	Binary input 4 +	BIO_6	BI4
X339-10	Binary input 5 +	BIO_6	BI5
X339-11	-		
X339-12	Common - for inputs 6-7		
X339-13	Binary input 6 +	BIO_6	BI6
X339-14	Binary input 7 +	BIO_6	BI7
X339-15	-		
X339-16	Common - for inputs 8-9		
X339-17	Binary input 8 +	BIO_6	BI8
X339-18	Binary input 9 +	BIO_6	BI9

17.3 Outputs

17.3.1 Outputs for tripping, controlling and signalling

Output contacts PO1, PO2 and PO3 are power output contacts used, for example, for controlling circuit breakers.

Each signal connector terminal is connected with one 14 or 16 Gauge wire. Use 12 or 14 Gauge wire for CB trip circuit.

The connected DC voltage to outputs with trip circuit supervision (TCM) must have correct polarity or the trip circuit supervision TCSSCBR function will not operate properly.

Table 444:

Terminal	Description	PCM600 info	
		Hardware module instance	Hardware channel
	Power output 1, normally open (TCM)		
X317-1	-	PSM_102	BO1_PO_TCM
X317-2	+		
	Power output 2, normally open (TCM)		
X317-3	-	PSM_102	BO2_PO_TCM
X317-4	+		
	Power output 3, normally open (TCM)		
X317-5	-	PSM_102	BO3_PO_TCM
X317-6	+		
X317-7	Power output 4, normally open	PSM_102	BO4_PO
X317-8			
X317-9	Power output 5, normally open	PSM_102	BO5_PO
X317-10			
X317-11	Power output 6, normally open	PSM_102	BO6_PO
X317-12			

Table 445: Output contacts X321, 3U full 19"

Terminal	Description	PCM600 info	
		Hardware module instance	Hardware channel
X321-1	Power output 1, normally open	BIO_3	BO1_PO
X321-2			
X321-3	Power output 2, normally open	BIO_3	BO2_PO
X321-4			
X321-5	Power output 3, normally open	BIO_3	BO3_PO
X321-6			

Table 446: Output contacts X326, 3U full 19"

Terminal	Description	PCM600 info	
		Hardware module instance	Hardware channel
X326-1	Power output 1, normally open	BIO_4	BO1_PO
X326-2			
X326-3	Power output 2, normally open	BIO_4	BO2_PO

Table continues on next page

Terminal	Description	PCM600 info	
		Hardware module instance	Hardware channel
X326-4			
X326-5 X326-6	Power output 3, normally open	BIO_4	BO3_PO

Table 447: Output contacts X331, 3U full 19"

Terminal	Description	PCM600 info	
		Hardware module instance	Hardware channel
X331-1 X331-2	Power output 1, normally open	BIO_5	BO1_PO
X331-3 X331-4	Power output 2, normally open	BIO_5	BO2_PO
X331-5 X331-6	Power output 3, normally open	BIO_5	BO3_PO

Table 448: Output contacts X336, 3U full 19"

Terminal	Description	PCM600 info	
		Hardware module instance	Hardware channel
X336-1 X336-2	Power output 1, normally open	BIO_6	BO1_PO
X336-3 X336-4	Power output 2, normally open	BIO_6	BO2_PO
X336-5 X336-6	Power output 3, normally open	BIO_6	BO3_PO

17.3.2 Outputs for signalling

Signal output contacts are used for signalling on starting and tripping of the IED. On delivery from the factory, the pickup and alarm signals from all the protection stages are routed to signalling outputs. See connection diagrams.

Each signal connector terminal is connected with one 14 or 16 Gauge wire.

Table 449: Output contacts X317, 3U full 19"

Terminal	Description	PCM600 info	
		Hardware module instance	Hardware channel
X317-13 X317-14	Signal output 1, normally open	PSM_102	BO7_SO
X317-15 X317-16	Signal output 2, normally open	PSM_102	BO8_SO
X317-17 X317-18	Signal output 3, normally open	PSM_102	BO9_SO

Table 450: Output contacts X321, 3U full 19"

Terminal	Description	PCM600 info	
		Hardware module instance	Hardware channel
X321-7 X321-8	Signal output 1, normally open Signal output 1	BIO_3	BO4_SO
X321-9 X321-10	Signal output 2, normally open Signal output 2	BIO_3	BO5_SO
X321-11 X321-12	Signal output 3, normally open Signal output 3	BIO_3	BO6_SO
X321-13 X321-14 X321-15	Signal output 4, normally open Signal output 5, normally open Signal outputs 4 and 5, common	BIO_3 BIO_3	BO7_SO BO8_SO
X321-16 X321-17 X321-18	Signal output 6, normally closed Signal output 6, normally open Signal output 6, common	BIO_3	BO9_SO

Table 451: Output contacts X326, 3U full 19"

Terminal	Description	PCM600 info	
		Hardware module instance	Hardware channel
X326-7 X326-8	Signal output 1, normally open Signal output 1	BIO_4	BO4_SO
X326-9 X326-10	Signal output 2, normally open Signal output 2	BIO_4	BO5_SO
X326-11 X326-12	Signal output 3, normally open Signal output 3	BIO_4	BO6_SO
X326-13	Signal output 4, normally open	BIO_4	BO7_SO

Table continues on next page

Terminal	Description	PCM600 info	
		Hardware module instance	Hardware channel
X326-14	Signal output 5, normally open	BIO_4	BO8_SO
X326-15	Signal outputs 4 and 5, common		
X326-16	Signal output 6, normally closed	BIO_4	BO9_SO
X326-17	Signal output 6, normally open		
X326-18	Signal output 6, common		

Table 452: Output contacts X331, 3U full 19"

Terminal	Description	PCM600 info	
		Hardware module instance	Hardware channel
X331-7	Signal output 1, normally open	BIO_5	BO4_SO
X331-8	Signal output 1		
X331-9	Signal output 2, normally open	BIO_5	BO5_SO
X331-10	Signal output 2		
X331-11	Signal output 3, normally open	BIO_5	BO6_SO
X331-12	Signal output 3		
X331-13	Signal output 4, normally open	BIO_5	BO7_SO
X331-14	Signal output 5, normally open	BIO_5	BO8_SO
X331-15	Signal outputs 4 and 5, common		
X331-16	Signal output 6, normally closed	BIO_5	BO9_SO
X331-17	Signal output 6, normally open		
X331-18	Signal output 6, common		

Table 453: Output contacts X336, 3U full 19"

Terminal	Description	PCM600 info	
		Hardware module instance	Hardware channel
X336-7	Signal output 1, normally open	BIO_6	BO4_SO
X336-8	Signal output 1		
X336-9	Signal output 2, normally open	BIO_6	BO5_SO
X336-10	Signal output 2		
X336-11	Signal output 3, normally open	BIO_6	BO6_SO
X336-12	Signal output 3		
X337-13	Signal output 4, normally open	BIO_6	BO7_SO
X336-14	Signal output 5, normally open	BIO_6	BO8_SO
X336-15	Signal outputs 4 and 5, common		

Table continues on next page

Terminal	Description	PCM600 info	
		Hardware module instance	Hardware channel
X336-16	Signal output 6, normally closed	BIO_6	BO9_SO
X336-17	Signal output 6, normally open		
X336-18	Signal output 6, common		

17.3.3 IRF

The IRF contact functions as a change-over output contact for the self-supervision system of the IED. Under normal operating conditions, the IED is energized and one of the two contacts is closed. When a fault is detected by the self-supervision system or the auxiliary voltage is disconnected, the closed contact drops off and the other contact closes.

Each signal connector terminal is connected with one 14 or 16 Gauge wire.

Table 454: IRF contact X319

Case	Terminal	Description
3U full 19”	X319-1	Closed; no IRF, and V_{aux} connected
	X319-2	Closed; IRF, or V_{aux} disconnected
	X319-3	IRF, common

17.4 Communication connections

The IED's LHMI is provided with an RJ-45 connector. The connector is intended for configuration and setting purposes.

Rear communication via the X1/LAN1 connector uses a communication module with the optical LC Ethernet connection.

The HMI connector X0 is used for connecting an external HMI to the IED. The X0/ HMI connector must not be used for any other purpose.

Rear communication via the X8/EIA-485/IRIG-B connector uses a communication module with the galvanic EIA-485 serial connection.

17.4.1 Ethernet RJ-45 front connection

The IED's LHMI is provided with an RJ-45 connector designed for point-to-point use. The connector is intended for configuration and setting purposes. The interface on the

PC has to be configured in a way that it obtains the IP address automatically if the DHCPServer is enabled in LHMI. There is a DHCP server inside IED for the front interface only.

The events and setting values and all input data such as memorized values and disturbance records can be read via the front communication port.

Only one of the possible clients can be used for parametrization at a time.

- PCM600
- LHMI

The default IP address of the IED through this port is 10.1.150.3.

The front port supports TCP/IP protocol. A standard Ethernet CAT 5 crossover cable is used with the front port.

17.4.2 Station communication rear connection

The default IP address of the IED through the Ethernet connection is 192.168.1.10. The physical connector is X1/LAN1. The interface speed is 100 Mbps for the 100BASE-FX LC alternative.

17.4.3 Optical serial rear connection

Serial communication can be used via optical connection in star topology. Connector type is glass (ST connector). Connection's idle state is indicated either with light on or light off. The physical connector is X9/Rx,Tx.

17.4.4 EIA-485 serial rear connection

The communication module follows the EIA-485 standard and is intended to be used in multi-point communication.

Table 455: EIA-485 connections

Pin	Description
1	GNDC
2	GND
3	RS485 RXTERM
4	RS485 RX-
5	RS485 RX+
6	RS485 TX+

Table continues on next page

Pin	Description
7	RS485 RXTERM
8	RS485 TX-
9	RS485 GND
10	RS485 GND
11	IRIG-B -
12	IRIG-B +
13	GNDC
14	GND

17.4.5 Communication interfaces and protocols

Table 456: Supported station communication interfaces and protocols

Protocol	Ethernet	Serial	
	100BASE-FX LC	Glass fibre (ST connector)	EIA-485
IEC 61850–8–1	●	-	-
DNP3	●	●	●
IEC 60870-5-103	-	●	●
● = Supported			

17.4.6 Recommended industrial Ethernet switches

ABB recommends three third-party industrial Ethernet switches.

- RuggedCom RS900
- RuggedCom RS1600
- RuggedCom RSG2100

17.5 Connection diagrams

The 6U casing is not included in this release of the 650 series.

17.5.1 Connection diagrams for 650 series

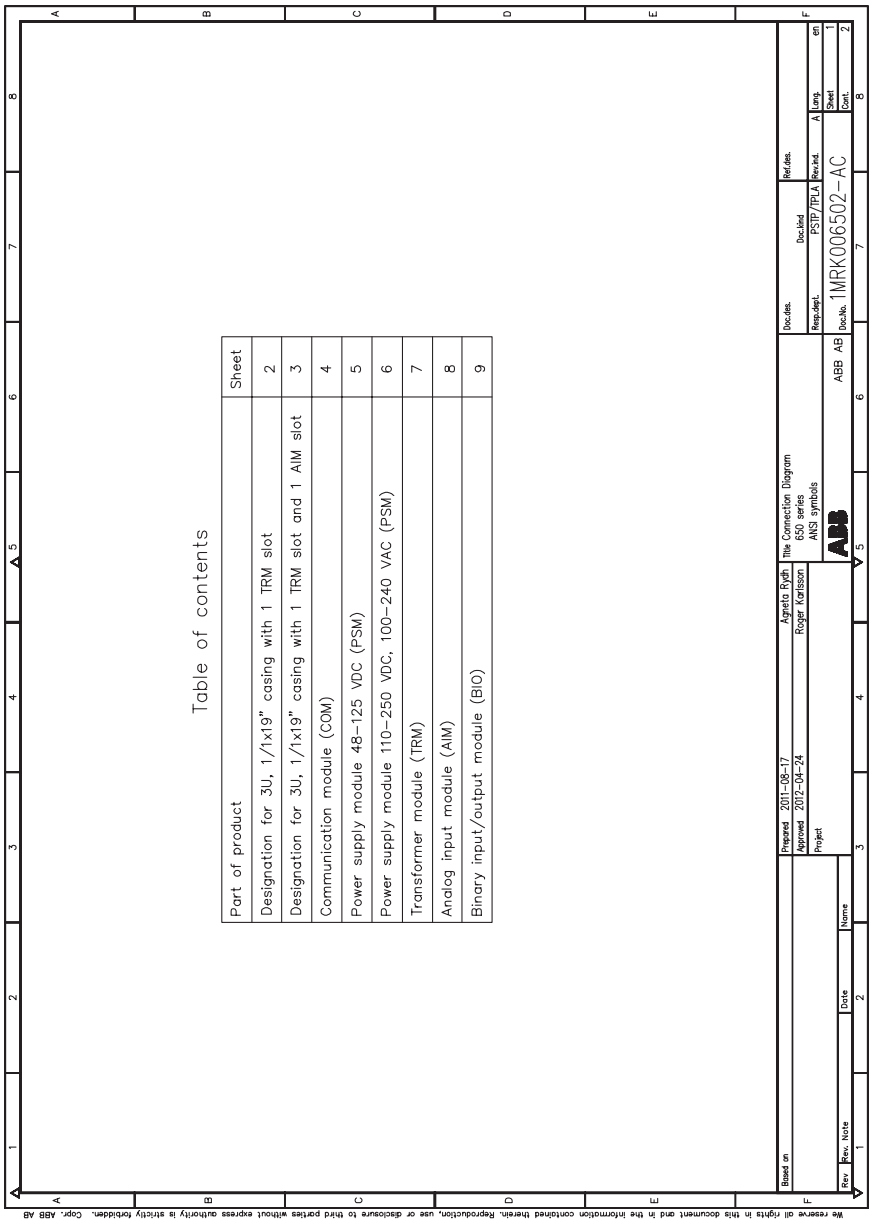

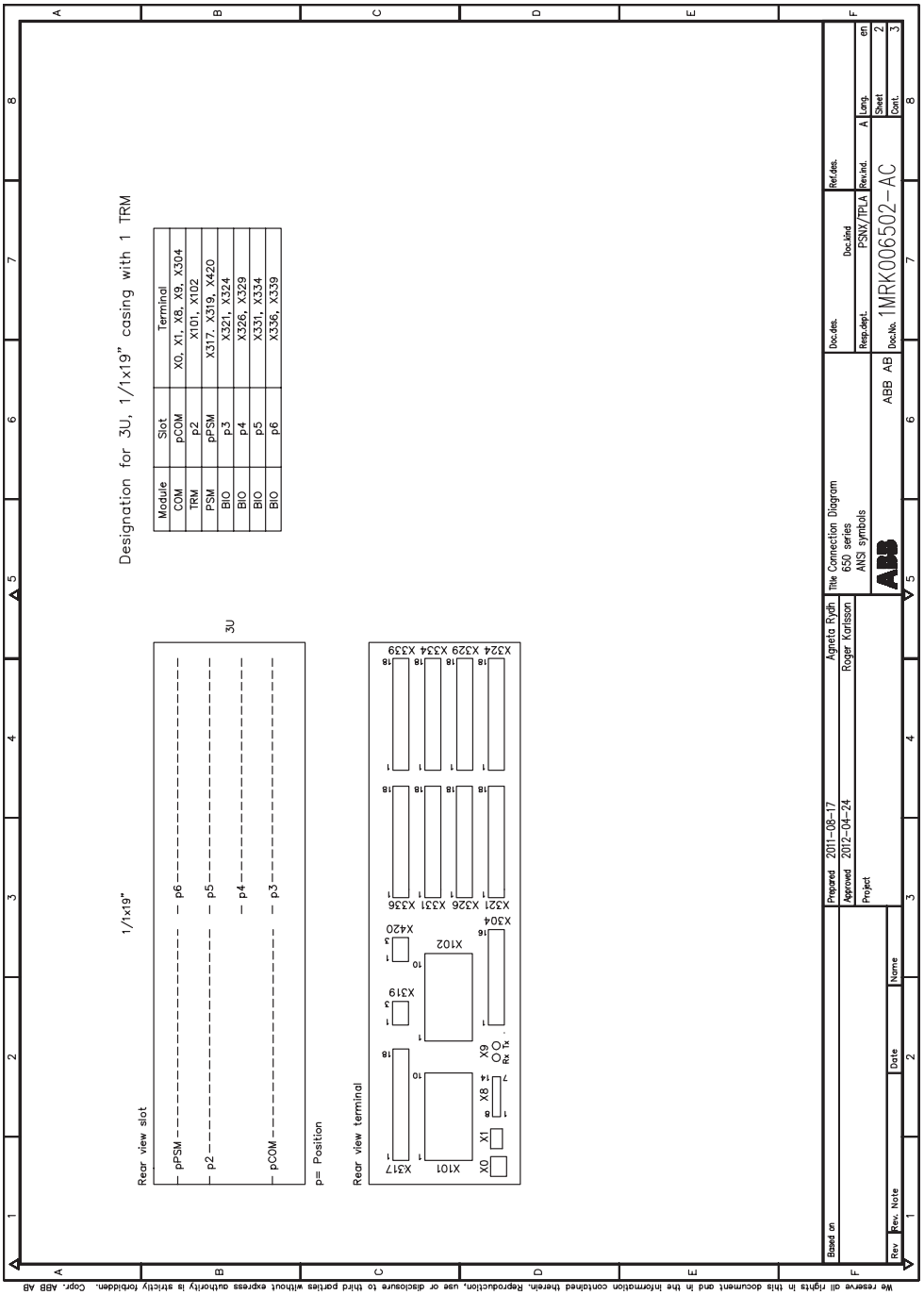
Designation for 3U, 1/1x19" casing with 1 TRM
Module
Slot
Terminal
COM
pCOM
X0, X1, X8, X9, X304
TRM
p2
X101, X102
PSM
pPSM
X317, X319, X420
BIO
p3
X321, X324
BIO
p4
X326, X329
BIO
p5
X331, X334
BIO
p6
X336, X339
Rear view slot
1/1x19"
3U
pPSM
p6
p5
p4
p3
pCOM
p= Position
Rear view terminal
X317
X101
X0
X1
X8
X9
Tx
Rx
X319
X102
X420
X304
X321
X326
X331
X336
X324
X329
X334
X339
Based on
Rev
Rev. Note
Date
Name
Prepared
2011-08-17
Agneta Rydh
Approved
2012-04-24
Roger Karlsson
Project
Title
Connection Diagram
650 series
ANSI symbols
ABB AB
Doc.des.
Resp.dept.
Doc.kind
PSNX/TPLA
Doc.No.
1MRK006502-AC
Ref.des.
Rev.ind.
A
Lang.
en
Sheet
2
Cont.
3
We reserve all rights in this document and in the information contained therein. Reproduction, use or disclosure to third parties without express authority is strictly forbidden. Copyr. ABB AB

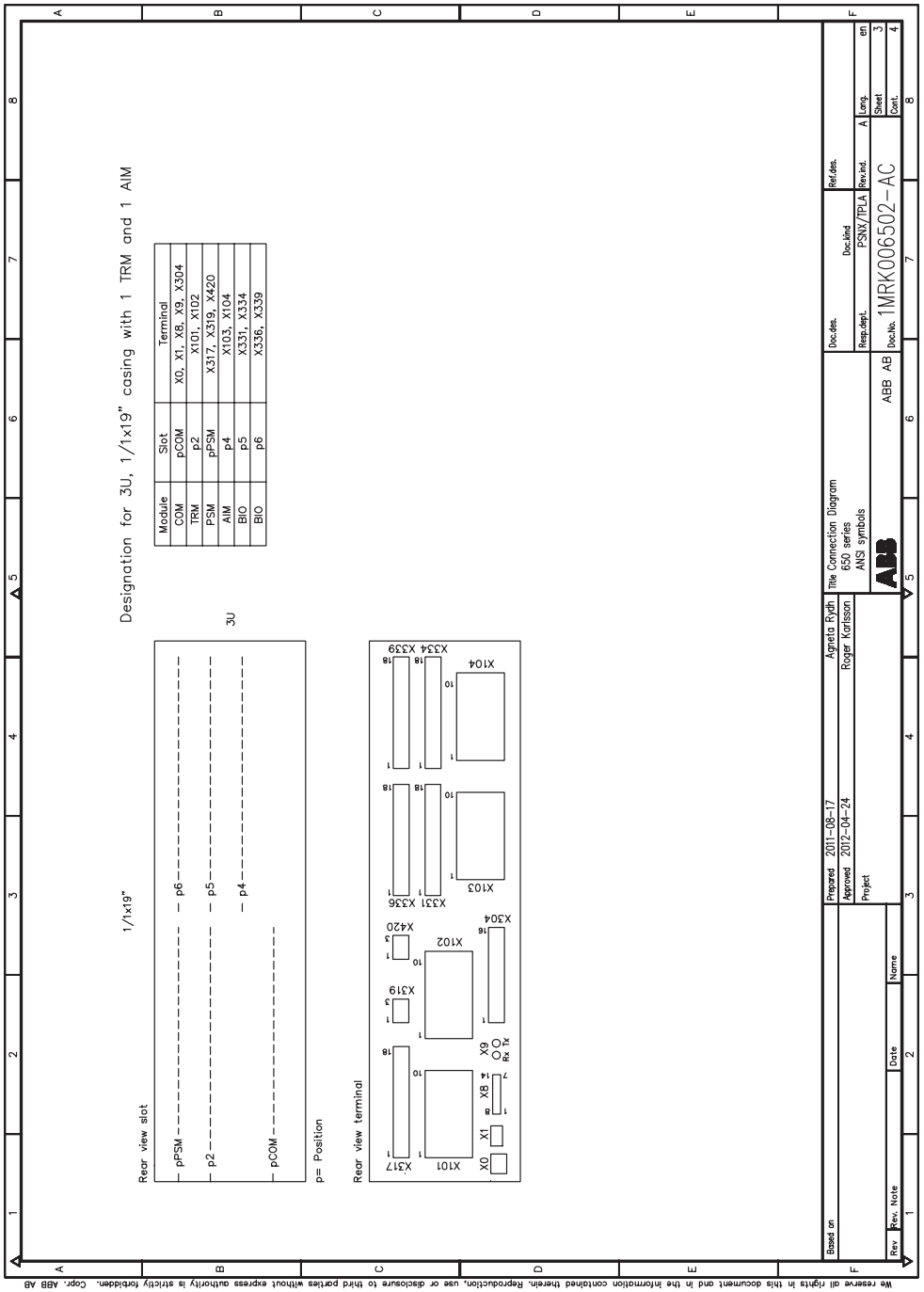
Designation for 3U, 1/1x19" casing with 1 TRM and 1 AIM
Module
Slot
Terminal
COM
pCOM
X0, X1, X8, X9, X304
TRM
p2
X101, X102
PSM
pPSM
X317, X319, X420
AIM
p4
X103, X104
BIO
p5
X331, X334
BIO
p6
X336, X339
Rear view slot
1/1x19"
pPSM
p2
pCOM
p6
p5
p4
3U
p= Position
Rear view terminal
X317
X101
X0
X1
X8
X9
Tx
Rx
X319
X420
X102
X304
X331
X336
X103
X334
X339
X104
Based on
Prepared
2011-08-17
Agneta Rydh
Approved
2012-04-24
Roger Karlsson
Project
Title
Connection Diagram
650 series
ANSI symbols
ABB
ABB AB
Doc.des.
Doc.No.
1MRK006502-AC
Doc.kind
PSNX/PLA
Ref.des.
Resp.dept.
Rev.ind.
A
Lang.
en
Sheet
3
Cont.
4
Rev.
Rev. Note
Date
Name
We reserve all rights in this document and in the information contained therein. Reproduction, use or disclosure to third parties without express authority is strictly forbidden. Copr. ABB AB

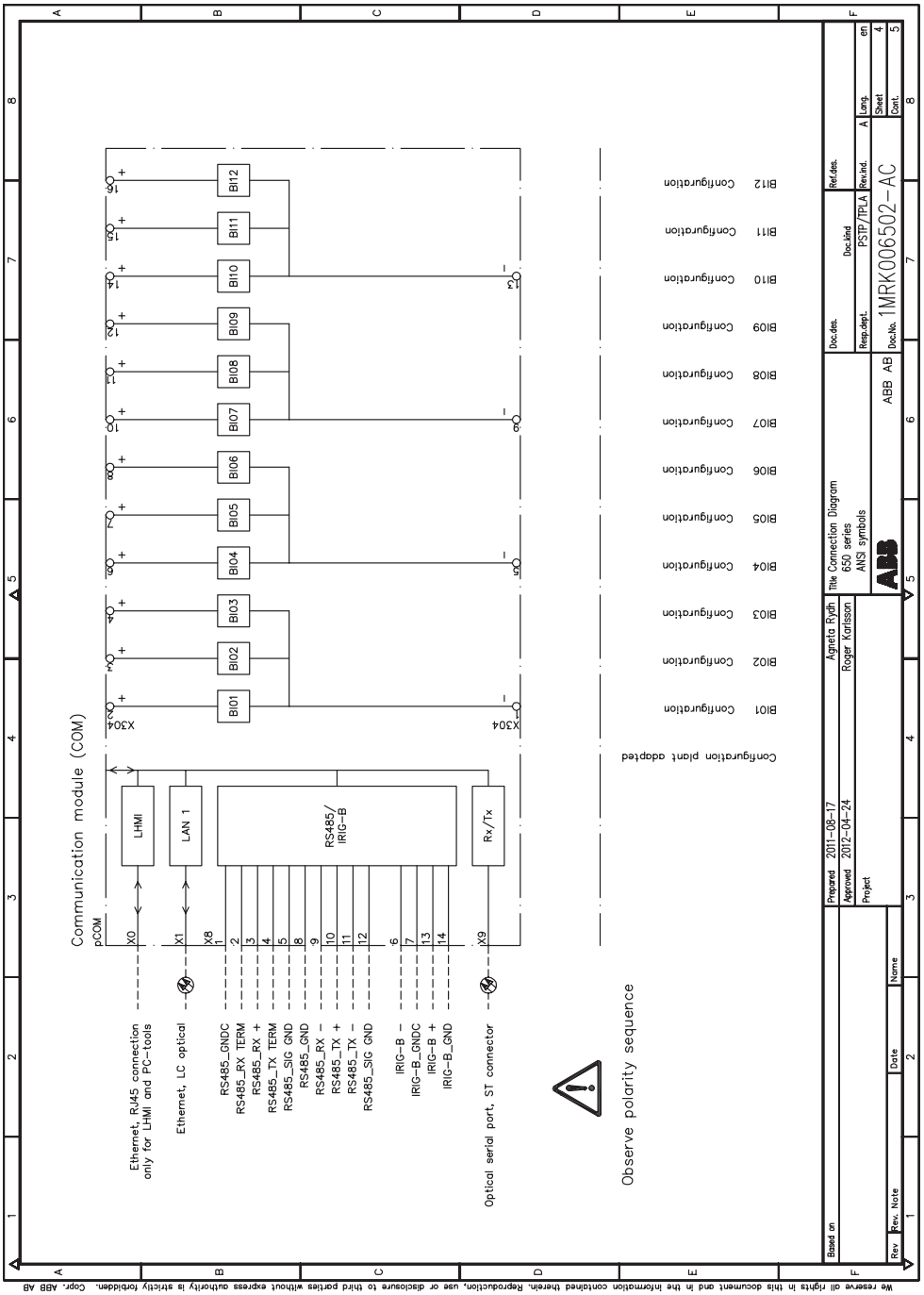

We reserve all rights in this document and in the information contained therein. Reproduction, use or disclosure to third parties without express authority is strictly forbidden. Copyr. ABB AB

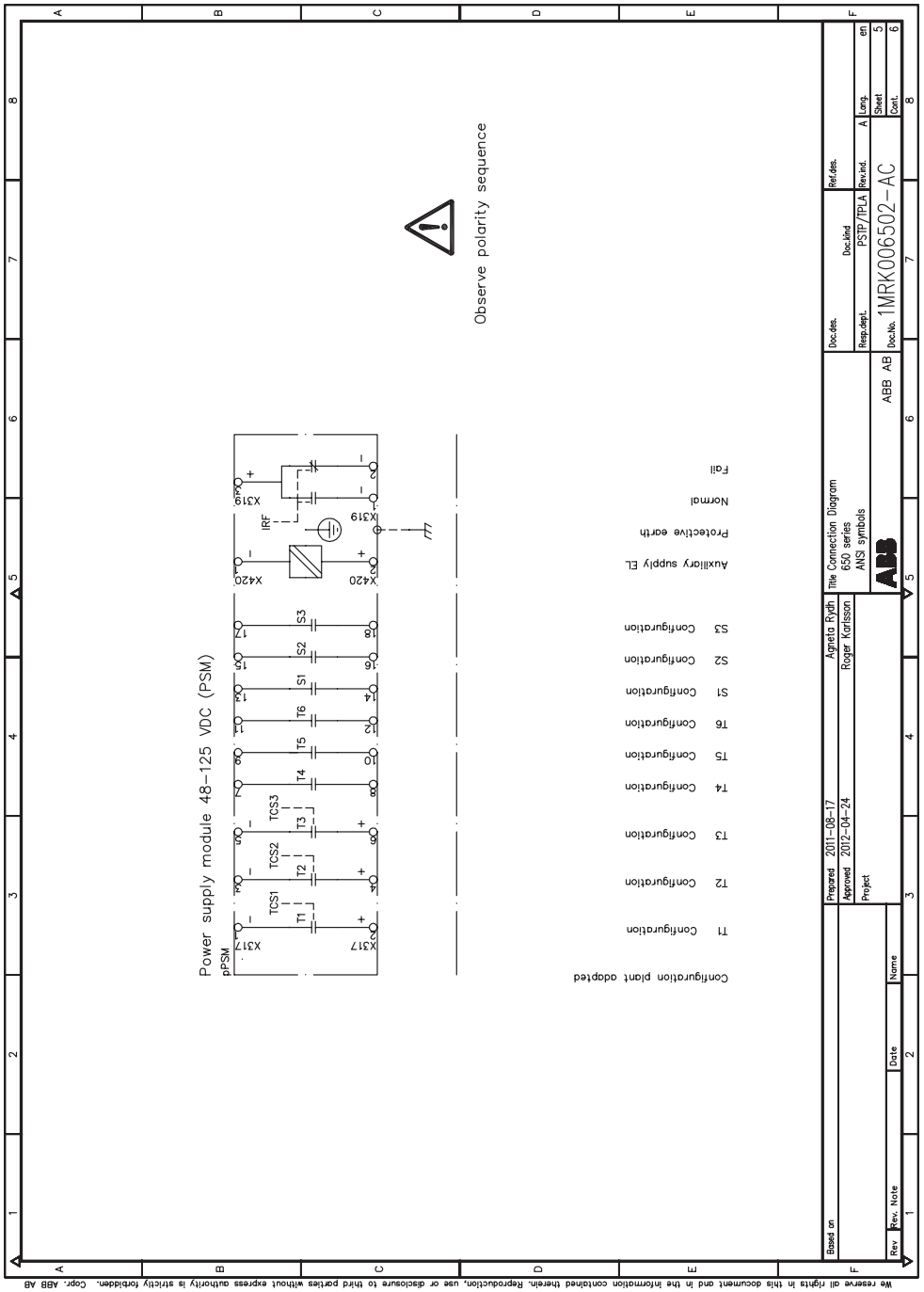
Power supply module 48–125 VDC (PSM)
pPSM
X317
TCS1
TCS2
TCS3
T1
T2
T3
T4
T5
T6
S1
S2
S3
X420
IRF
X319
X319
Observe polarity sequence
Configuration plant addpted
T1 Configuration
T2 Configuration
T3 Configuration
T4 Configuration
T5 Configuration
T6 Configuration
S1 Configuration
S2 Configuration
S3 Configuration
Auxiliary supply EL
Protective earth
Normal
Fail
Based on
Rev
Rev. Note
Date
Name
Prepared 2011-08-17 Agneta Rydh
Approved 2012-04-24 Roger Karlsson
Project
Title Connection Diagram 650 series ANSI symbols
ABB
ABB AB
Doc.des.
Resp.dept.
Doc.No. 1MRK006502-AC
Doc.kind PSTP/TPLA
Ref.des.
Rev.ind. A
Lang. en
Sheet 5
Cont. 6
We reserve all rights in this document and in the information contained therein. Reproduction, use or disclosure to third parties without express authority is strictly forbidden. Copr. ABB AB

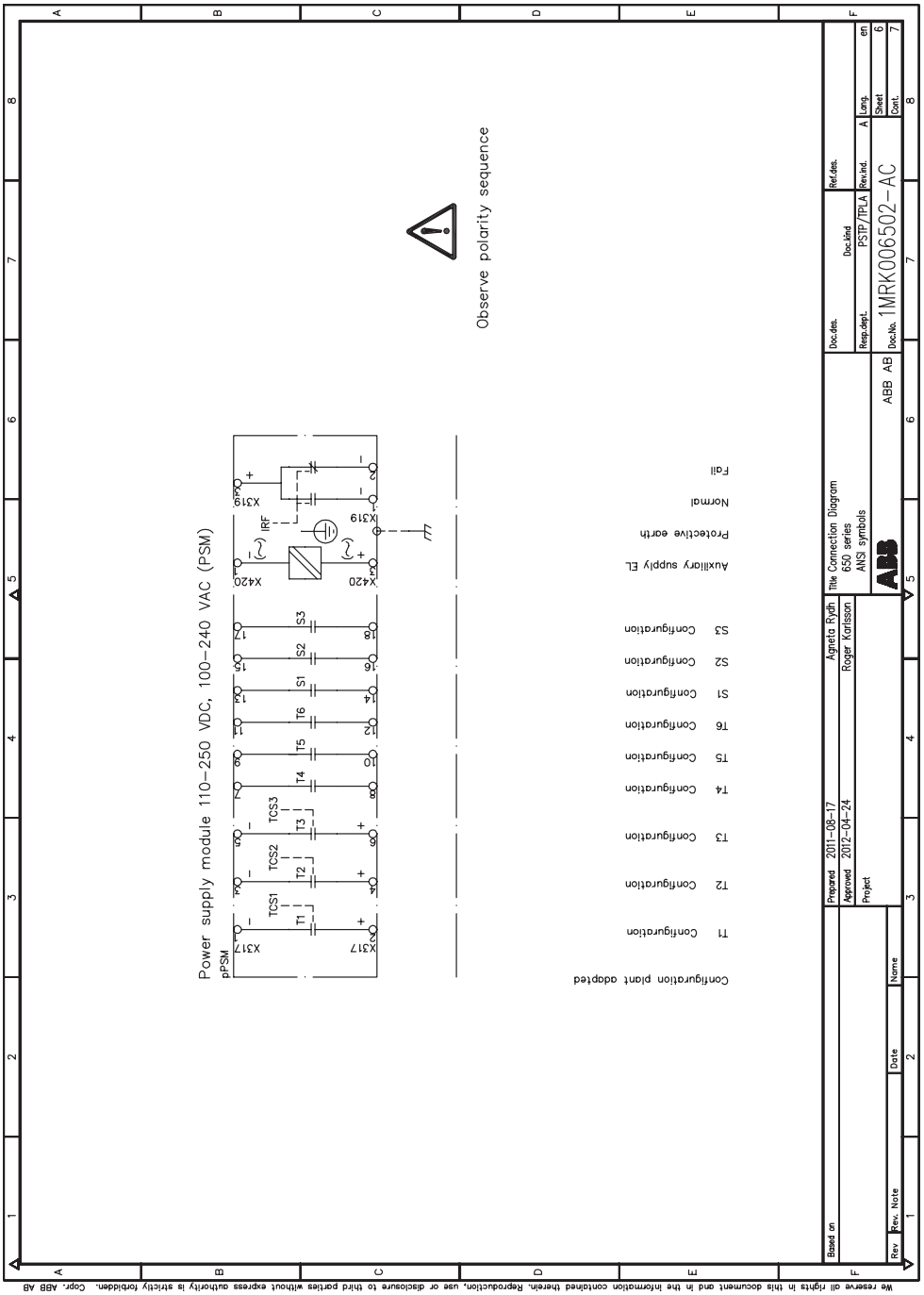
Power supply module 110–250 VDC, 100–240 VAC (PSM)
pPSM
X317
X420
X319
IRF
TCS1
TCS2
TCS3
T1
T2
T3
T4
T5
T6
S1
S2
S3
Observe polarity sequence
Configuration plant adapted
T1 Configuration
T2 Configuration
T3 Configuration
T4 Configuration
T5 Configuration
T6 Configuration
S1 Configuration
S2 Configuration
S3 Configuration
Auxiliary supply EL
Protective earth
Normal
Fail
Agneta Rydh
Roger Karlsson
2011-08-17
2012-04-24
Project
Title Connection Diagram
650 series
ANSI symbols
ABB AB
Doc.No. 1MRK006502-AC
PSTP/TPLA
Rev. Note
Date
Name
We reserve all rights in this document and in the information contained therein. Reproduction, use or disclosure to third parties without express authority is strictly forbidden. Copr. ABB AB

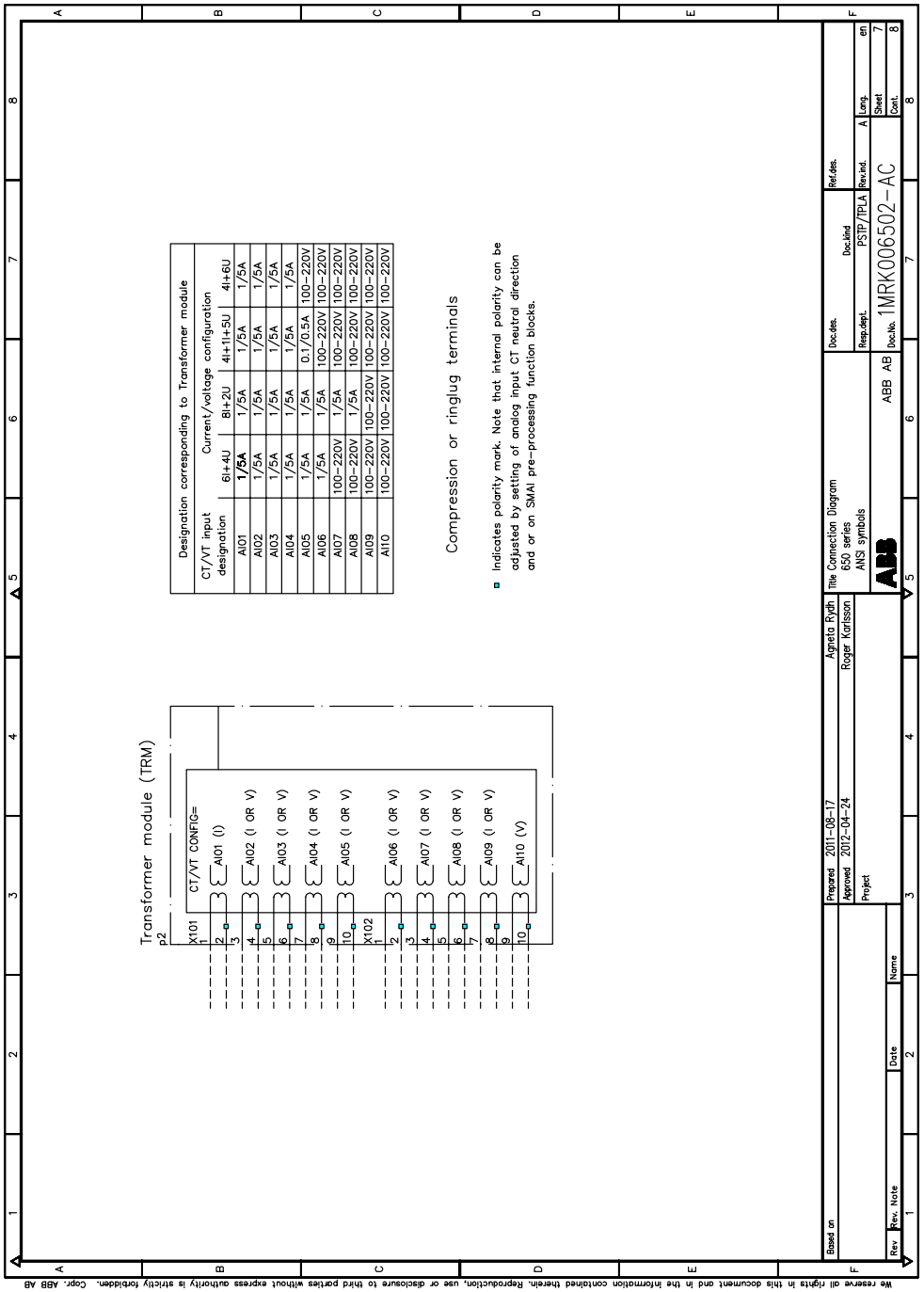
Transformer module (TRM)
p2
X101
CT/VT CONFIG=
AI01 (I)
AI02 (I OR V)
AI03 (I OR V)
AI04 (I OR V)
AI05 (I OR V)
X102
AI06 (I OR V)
AI07 (I OR V)
AI08 (I OR V)
AI09 (I OR V)
AI10 (V)
Designation corresponding to Transformer module
CT/VT input designation
Current/voltage configuration
6I+4U
8I+2U
4I+1I+5U
4I+6U
AI01 1/5A 1/5A 1/5A 1/5A
AI02 1/5A 1/5A 1/5A 1/5A
AI03 1/5A 1/5A 1/5A 1/5A
AI04 1/5A 1/5A 1/5A 1/5A
AI05 1/5A 1/5A 0.1/0.5A 100–220V
AI06 1/5A 1/5A 100–220V 100–220V
AI07 100–220V 1/5A 100–220V 100–220V
AI08 100–220V 1/5A 100–220V 100–220V
AI09 100–220V 100–220V 100–220V 100–220V
AI10 100–220V 100–220V 100–220V 100–220V
Compression or ringlug terminals
Indicates polarity mark. Note that internal polarity can be adjusted by setting of analog input CT neutral direction and or on SMAI pre-processing function blocks.
Based on
Prepared 2011-08-17 Agneta Rydh
Approved 2012-04-24 Roger Karlsson
Project
Title Connection Diagram 650 series ANSI symbols
ABB
ABB AB
Doc.des.
Resp.dept.
Doc.kind PSTP/TPLA
DocNo. 1MRK006502-AC
Ref.des.
Rev.ind. A
Lang. en
Sheet 7
Cont. 8
Rev. Rev. Note Date Name
We reserve all rights in this document and in the information contained therein. Reproduction, use or disclosure to third parties without express authority is strictly forbidden. Copyr. ABB AB

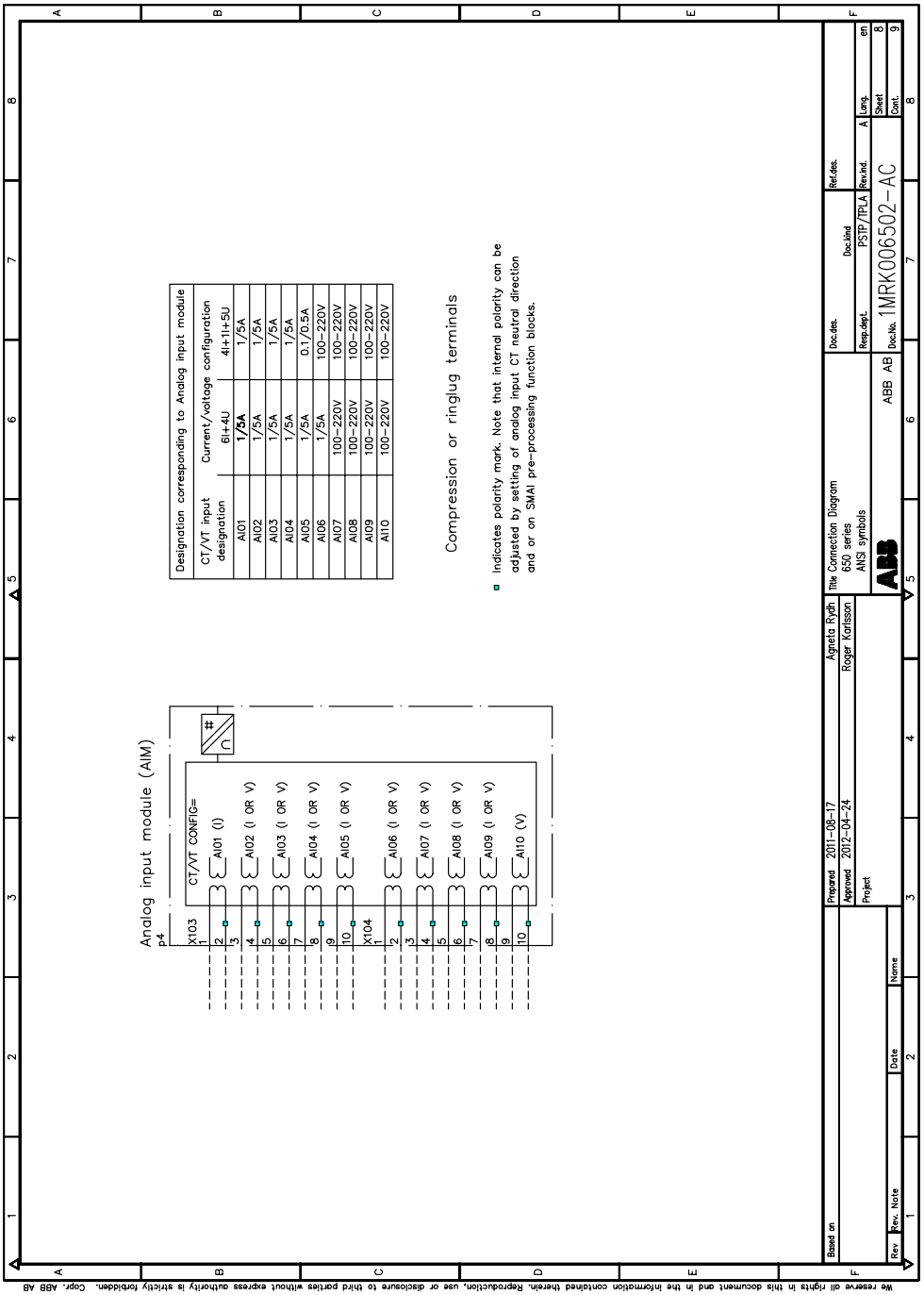

Designation corresponding to Analog input module		
CT/VT input designation	Current/voltage configuration	
	6I+4U	4I+1I+5U
AI01	**1/5A**	1/5A
AI02	1/5A	1/5A
AI03	1/5A	1/5A
AI04	1/5A	1/5A
AI05	1/5A	0.1/0.5A
AI06	1/5A	100-220V
AI07	100-220V	100-220V
AI08	100-220V	100-220V
AI09	100-220V	100-220V
AI10	100-220V	100-220V

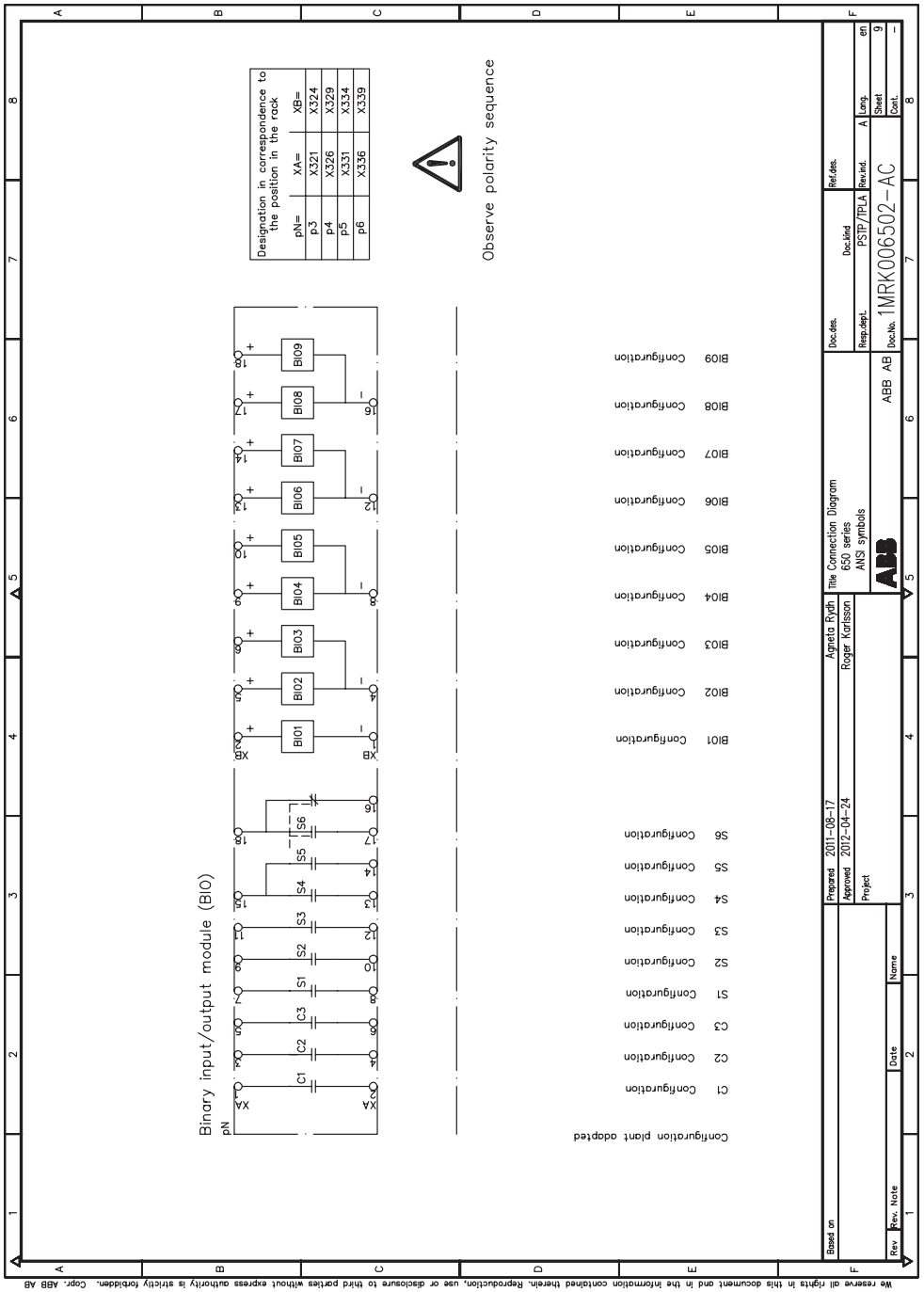
Binary input/output module (BIO)
Observe polarity sequence
Designation in correspondence to the position in the rack
pN= XA= XB=
p3 X321 X324
p4 X326 X329
p5 X331 X334
p6 X336 X339
Configuration plant adapted
C1 Configuration
C2 Configuration
C3 Configuration
S1 Configuration
S2 Configuration
S3 Configuration
S4 Configuration
S5 Configuration
S6 Configuration
BIO1 Configuration
BIO2 Configuration
BIO3 Configuration
BIO4 Configuration
BIO5 Configuration
BIO6 Configuration
BIO7 Configuration
BIO8 Configuration
BIO9 Configuration
Prepared 2011-08-17
Approved 2012-04-24
Agneta Rydh
Roger Karlsson
Title Connection Diagram
650 series
ANSI symbols
ABB AB
Doc.No. 1MRK006502-AC
Doc.kind PSTP/TPLA
Sheet 9
We reserve all rights in this document and in the information contained therein. Reproduction, use or disclosure to third parties without express authority is strictly forbidden. Copr. ABB AB

17.5.2 Connection diagrams for RET650 A01A

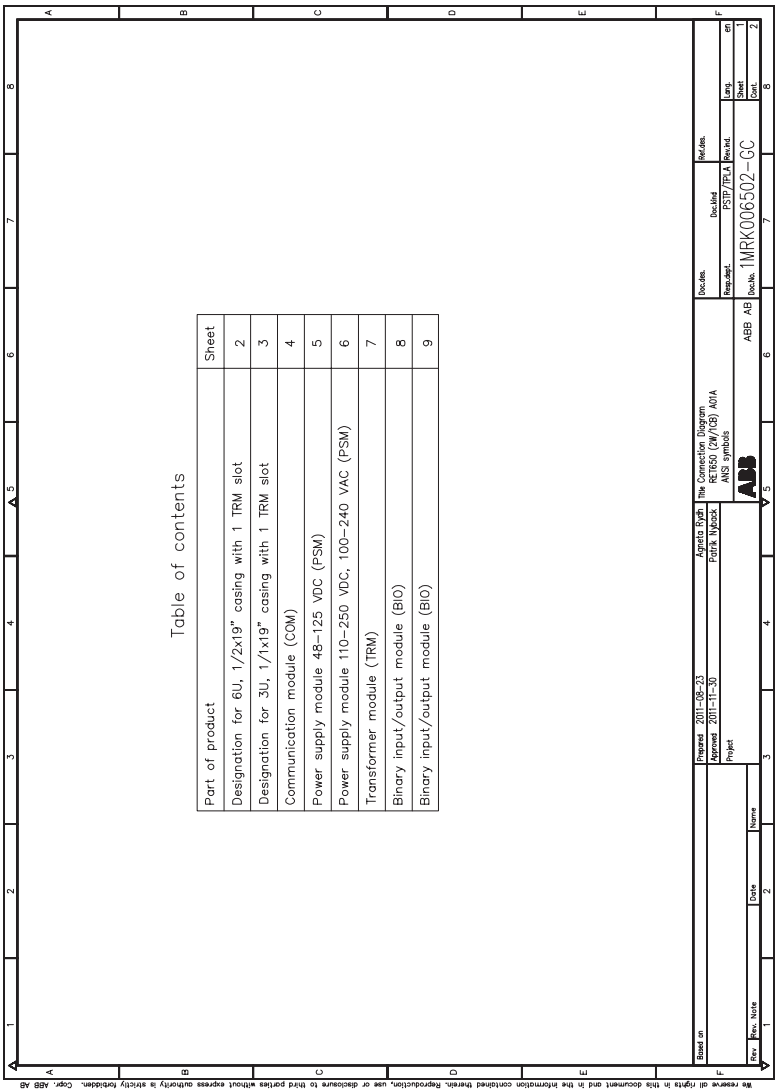

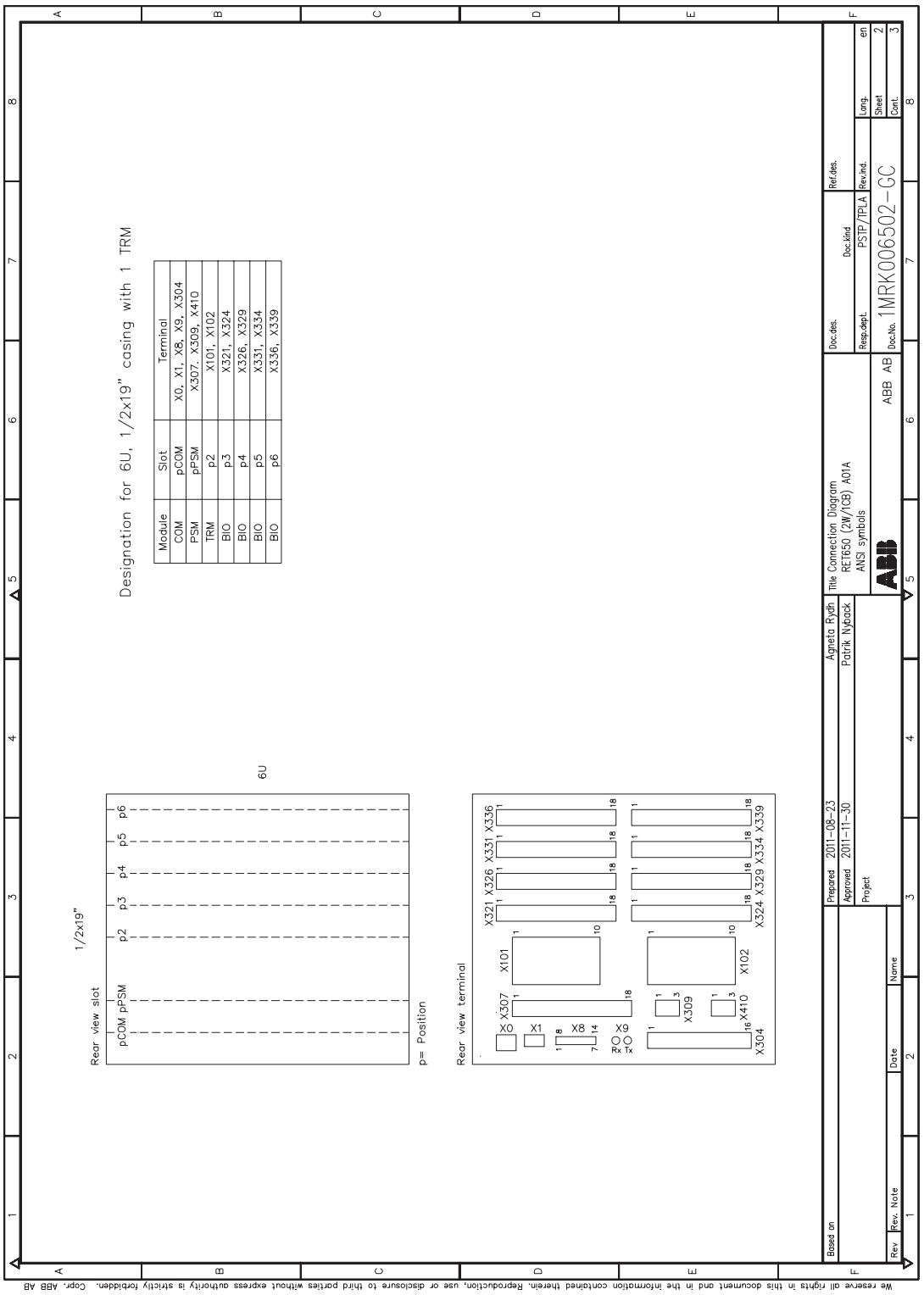
Designation for 6U, 1/2x19" casing with 1 TRM
Module | Slot | Terminal
COM | pCOM | X0, X1, X8, X9, X304
PSM | pPSM | X307, X309, X410
TRM | p2 | X101, X102
BIO | p3 | X321, X324
BIO | p4 | X326, X329
BIO | p5 | X331, X334
BIO | p6 | X336, X339
6U
1/2x19"
Rear view slot
pCOM pPSM p2 p3 p4 p5 p6
p= Position
Rear view terminal
X321 X326 X331 X336
X101
X307
X0
X1
X8
X9
Rx Tx
X309
X102
X410
X304
X324 X329 X334 X339
Based on
Prepared 2011-08-23 Agneta Rydh
Approved 2011-11-30 Patrik Nyback
Project
Title Connection Diagram
RET650 (2W/1CB) A01A
ANSI symbols
ABB AB
Doc.des.
Doc.No. 1MRK006502-GC
Doc.kind PSTP/TPLA
Resp.dept.
Ref.des.
Rev.ind.
Lang. en
Sheet 2
Cont. 3
Rev Rev. Note Date Name
We reserve all rights in this document and in the information contained therein. Reproduction, use or disclosure to third parties without express authority is strictly forbidden. Copr. ABB AB

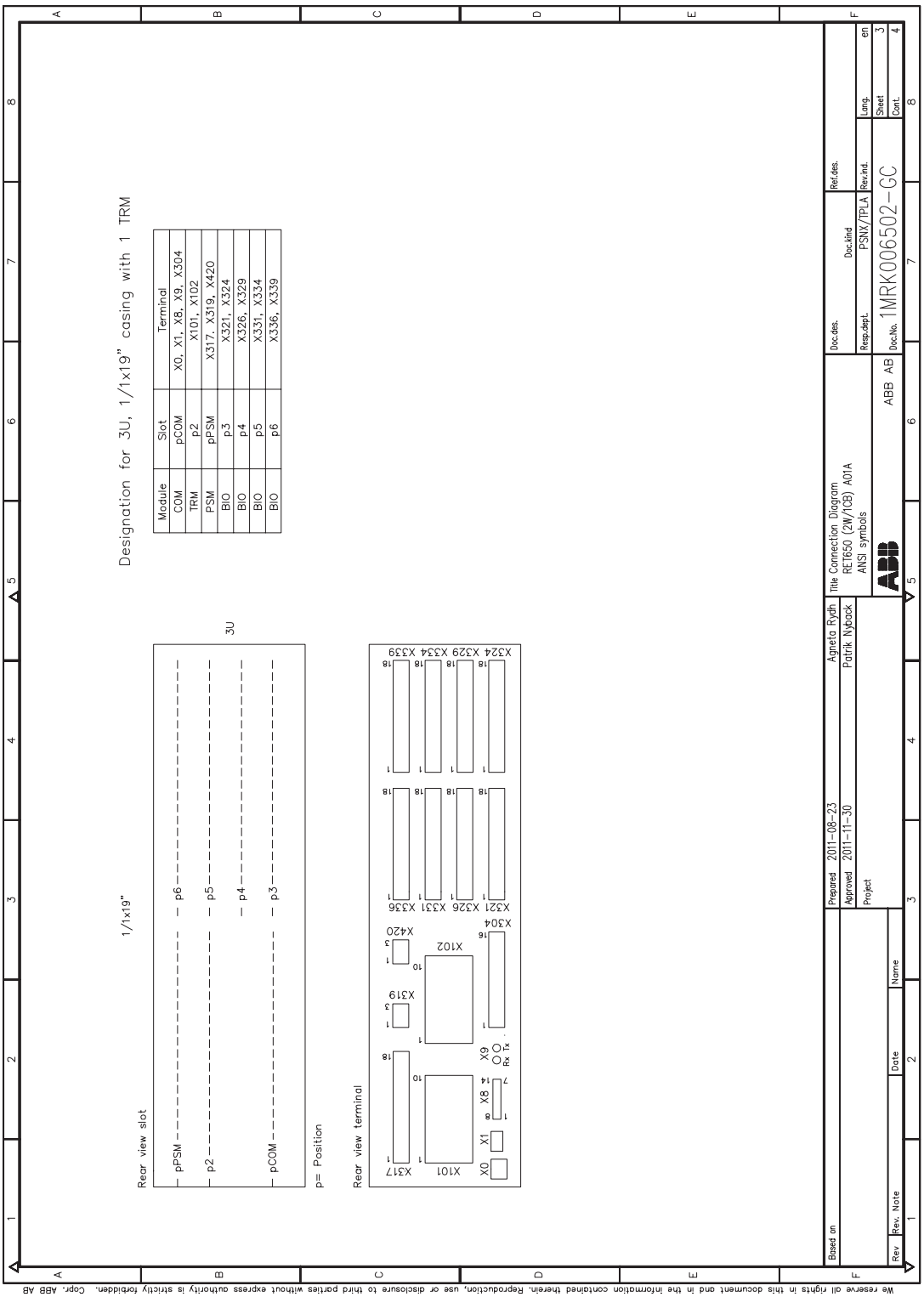
Designation for 3U, 1/1x19" casing with 1 TRM
Module | Slot | Terminal
COM | pCOM | X0, X1, X8, X9, X304
TRM | p2 | X101, X102
PSM | pPSM | X317, X319, X420
BIO | p3 | X321, X324
BIO | p4 | X326, X329
BIO | p5 | X331, X334
BIO | p6 | X336, X339
1/1x19"
Rear view slot
pPSM
p2
pCOM
p6
p5
p4
p3
3U
p= Position
Rear view terminal
X317
X101
X0
X1
X8
X9
Rx Tx
X102
X319
X420
X304
X321
X326
X331
X336
X324
X329
X334
X339
Prepared 2011-08-23 Agneta Rydh
Approved 2011-11-30 Patrik Nyback
Project
Based on
Title Connection Diagram
RET650 (2W,1CB) A01A
ANSI symbols
ABB AB
Doc.No. 1MRK006502-GC
Doc.des.
Doc.kind PSNX/TPLA
Resp.dept.
Ref.des.
Rev.ind.
Lang. en
Sheet 3
Cont. 4
Rev Rev. Note Date Name
We reserve all rights in this document and in the information contained therein. Reproduction, use or disclosure to third parties without express authority is strictly forbidden. Copr. ABB AB

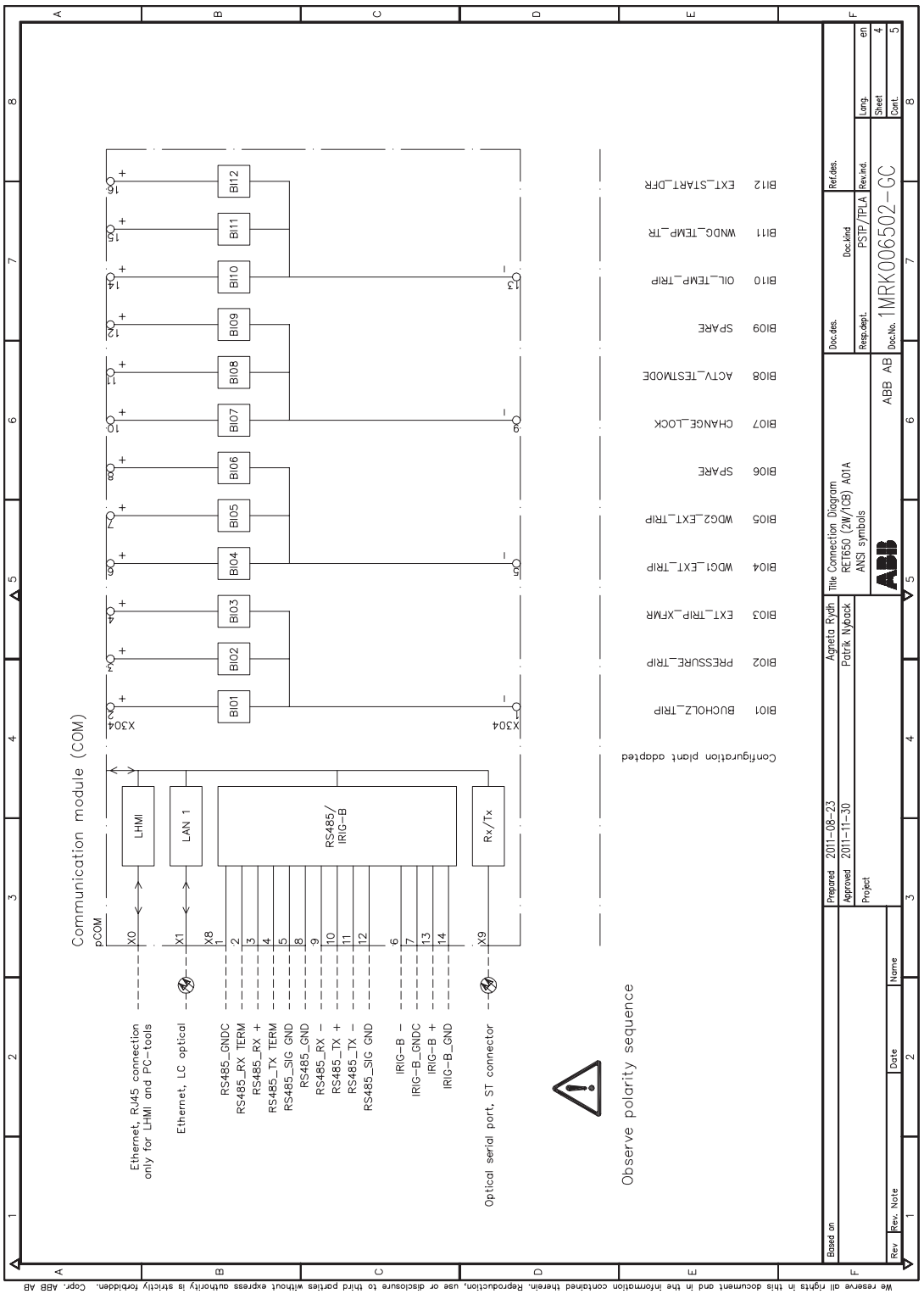
Communication module (COM)
pCOM
X0
X1
X8
X9
LHMI
LAN 1
RS485/
IRIG-B
Rx/Tx
Ethernet, RJ45 connection
only for LHMI and PC-tools
Ethernet, LC optical
RS485_GNDC
RS485_RX TERM
RS485_RX +
RS485_TX TERM
RS485_SIG GND
RS485_GND
RS485_RX –
RS485_TX +
RS485_TX –
RS485_SIG GND
IRIG-B –
IRIG-B_GNDC
IRIG-B +
IRIG-B_GND
Optical serial port, ST connector
Observe polarity sequence
X304
X304
BI01
BI02
BI03
BI04
BI05
BI06
BI07
BI08
BI09
BI10
BI11
BI12
BI01 BUCHOLZ_TRIP
BI02 PRESSURE_TRIP
BI03 EXT_TRIP_XFMR
BI04 WDG1_EXT_TRIP
BI05 WDG2_EXT_TRIP
BI06 SPARE
BI07 CHANGE_LOCK
BI08 ACTV_TESTMODE
BI09 SPARE
BI10 OIL_TEMP_TRIP
BI11 WNDG_TEMP_TR
BI12 EXT_START_DFR
Configuration plant adapted
Prepared 2011-08-23 Agneta Rydh
Approved 2011-11-30 Patrik Nyback
Project
Based on
Rev Rev. Note Date Name
Title Connection Diagram
RET650 (2W/1CB) A01A
ANSI symbols
ABB AB
Doc.des. Doc.kind
Resp.dept. PSTP/TPLA
Doc.No. 1MRK006502-GC
Ref.des.
Rev.ind.
Lang. en
Sheet 4
Cont. 5
We reserve all rights in this document and in the information contained therein. Reproduction, use or disclosure to third parties without express authority is strictly forbidden. Copr. ABB AB

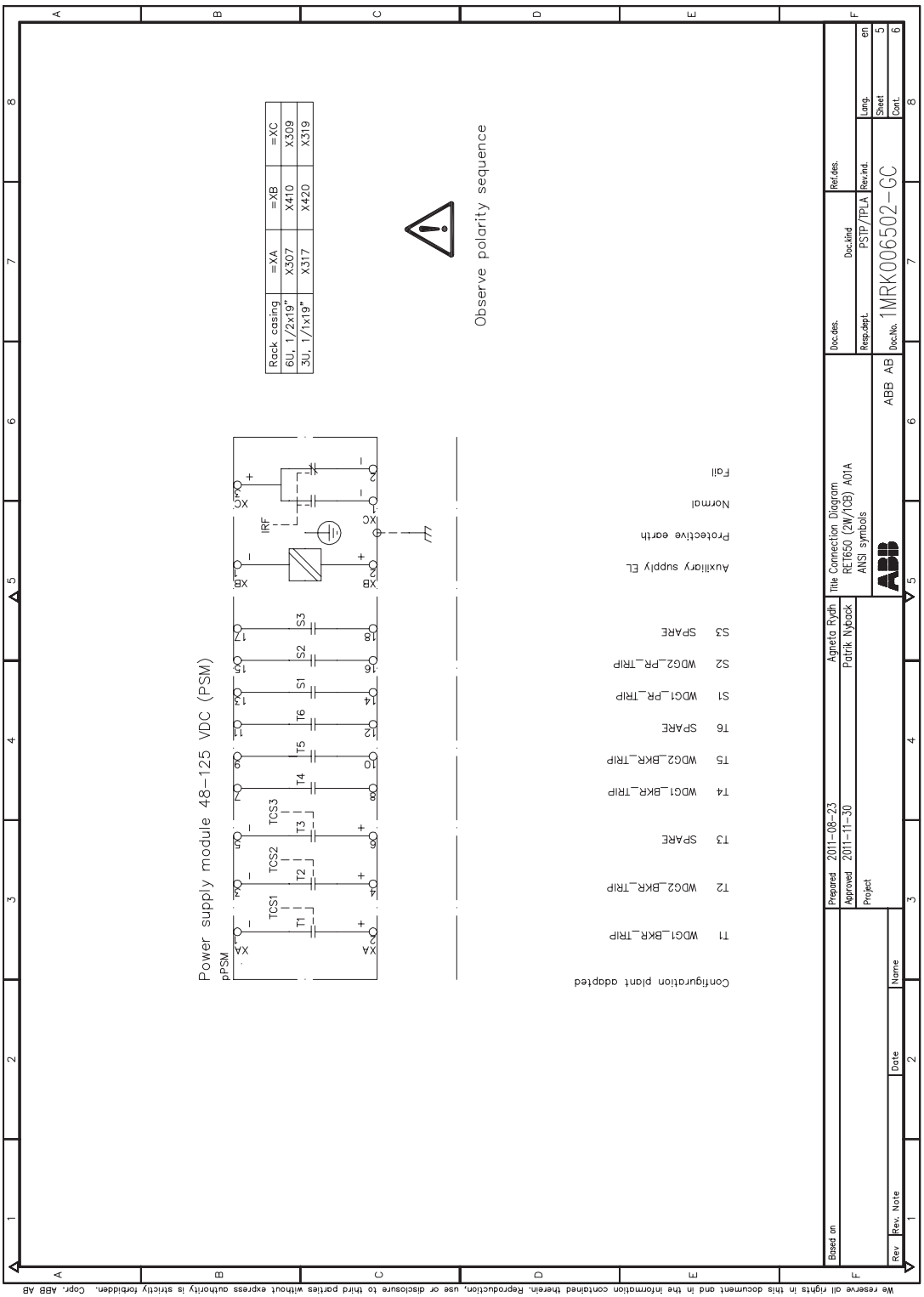
Power supply module 48–125 VDC (PSM)
pPSM
Observe polarity sequence
Rack casing | =XA | =XB | =XC
6U, 1/2x19" | X307 | X410 | X309
3U, 1/1x19" | X317 | X420 | X319
Configuration plant adapted
T1 WDG1_BKR_TRIP
T2 WDG2_BKR_TRIP
T3 SPARE
T4 WDG1_BKR_TRIP
T5 WDG2_BKR_TRIP
T6 SPARE
S1 WDG1_PR_TRIP
S2 WDG2_PR_TRIP
S3 SPARE
Auxiliary supply EL
Protective earth
Normal
Fail
Agneta Rydh
Patrik Nyback
Title Connection Diagram
RET650 (2W/1CB) A01A
ANSI symbols
ABB AB
Doc.No. 1MRK006502-GC
PSTP/TPLA
Prepared 2011-08-23
Approved 2011-11-30
Project
Based on
Rev Rev. Note Date Name
We reserve all rights in this document and in the information contained therein. Reproduction, use or disclosure to third parties without express authority is strictly forbidden. Copr. ABB AB

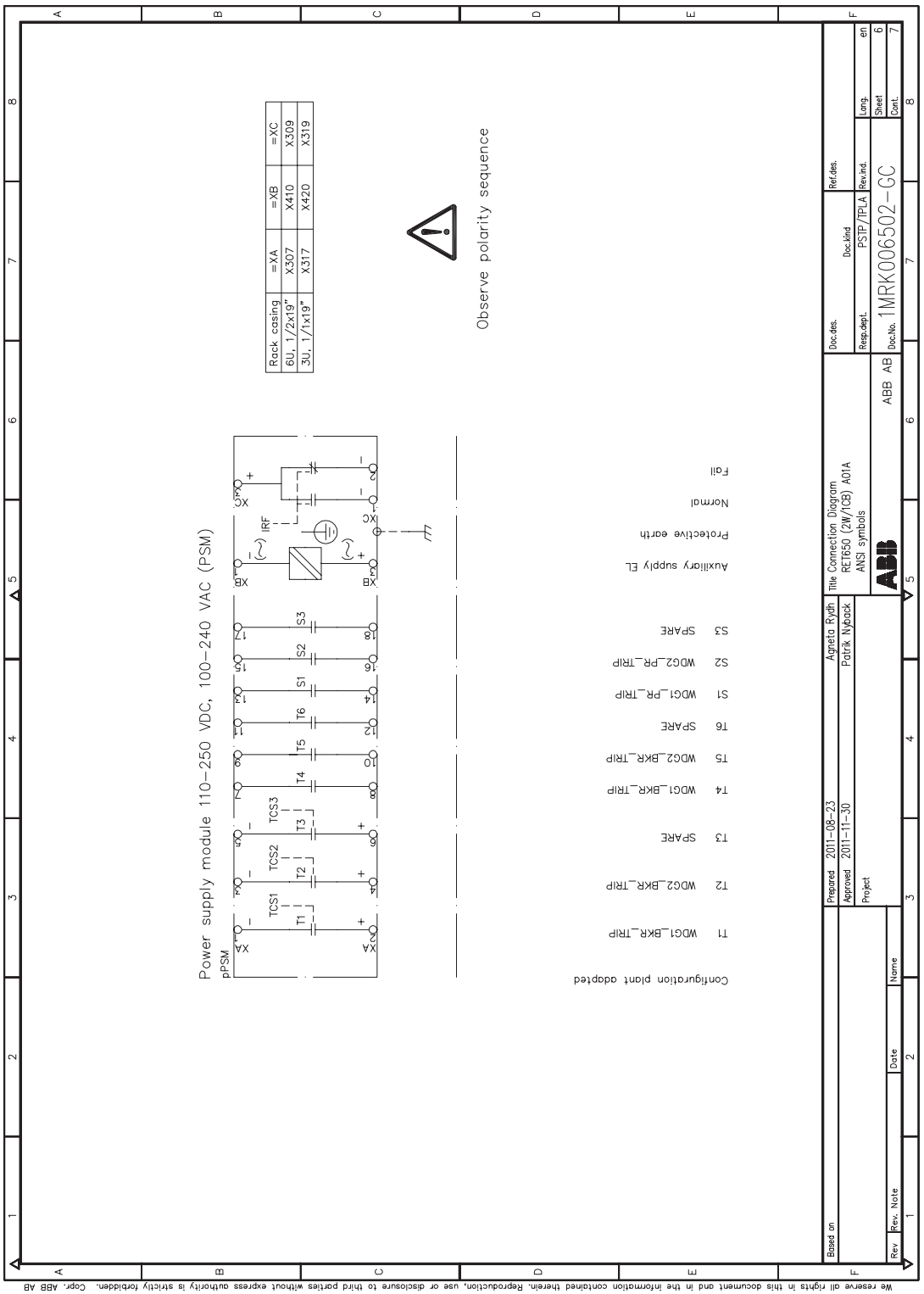
Power supply module 110–250 VDC, 100–240 VAC (PSM)
pPSM
Observe polarity sequence
Rack casing | =XA | =XB | =XC
6U, 1/2x19" | X307 | X410 | X309
3U, 1/1x19" | X317 | X420 | X319
Configuration plant adapted
T1 WDG1_BKR_TRIP
T2 WDG2_BKR_TRIP
T3 SPARE
T4 WDG1_BKR_TRIP
T5 WDG2_BKR_TRIP
T6 SPARE
S1 WDG1_PR_TRIP
S2 WDG2_PR_TRIP
S3 SPARE
Auxiliary supply EL
Protective earth
Normal
Fail
Based on
Prepared 2011-08-23 Agneta Rydh
Approved 2011-11-30 Patrik Nyback
Project
Title Connection Diagram
RET650 (2W/1GB) A01A
ANSI symbols
ABB AB
Doc.No. 1MRK006502-GC
Doc.kind PSTP/TPLA
Rev.ind.
Lang. en
Sheet 6
Cont. 7
Rev Rev. Note Date Name
We reserve all rights in this document and in the information contained therein. Reproduction, use or disclosure to third parties without express authority is strictly forbidden. Copr. ABB AB

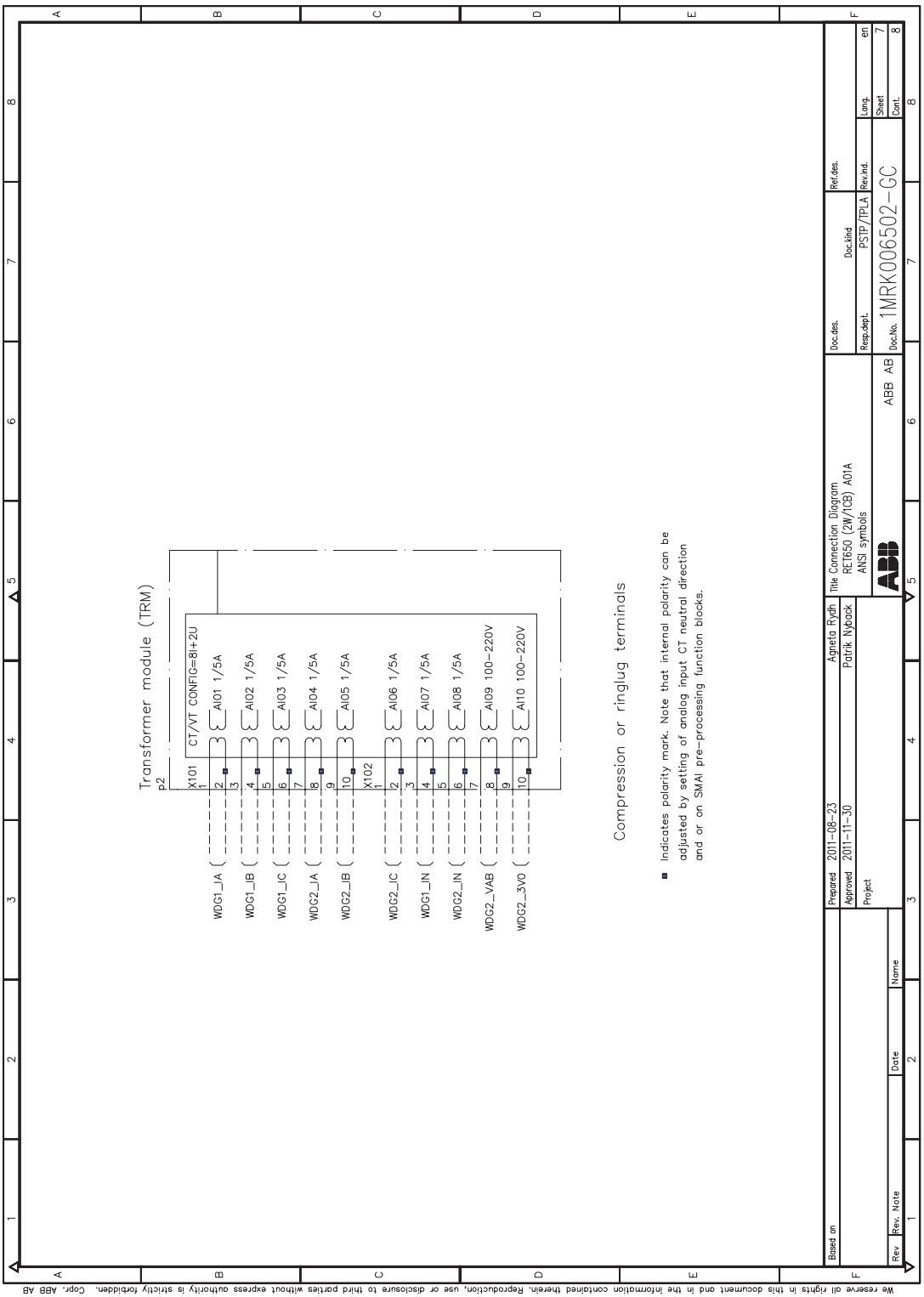
Transformer module (TRM)
p2
X101
CT/VT CONFIG=8I+2U
AI01 1/5A
AI02 1/5A
AI03 1/5A
AI04 1/5A
AI05 1/5A
X102
AI06 1/5A
AI07 1/5A
AI08 1/5A
AI09 100-220V
AI10 100-220V
WDG1_IA
WDG1_IB
WDG1_IC
WDG2_IA
WDG2_IB
WDG2_IC
WDG1_IN
WDG2_IN
WDG2_VAB
WDG2_3V0
Compression or ringlug terminals
Indicates polarity mark. Note that internal polarity can be adjusted by setting of analog input CT neutral direction and or on SMAI pre-processing function blocks.
Agneta Rydh
Patrik Nyback
Prepared 2011-08-23
Approved 2011-11-30
Project
Based on
Rev Rev. Note Date Name
Title Connection Diagram
RET650 (2W/1CB) A01A
ANSI symbols
ABB AB
Doc.des.
Doc.kind PSTP/TPLA
Ref.des.
Resp.dept.
Doc.No. 1MRK006502-GC
Rev.ind.
Lang. en
Sheet 7
Cont. 8
We reserve all rights in this document and in the information contained therein. Reproduction, use or disclosure to third parties without express authority is strictly forbidden. Copr. ABB AB

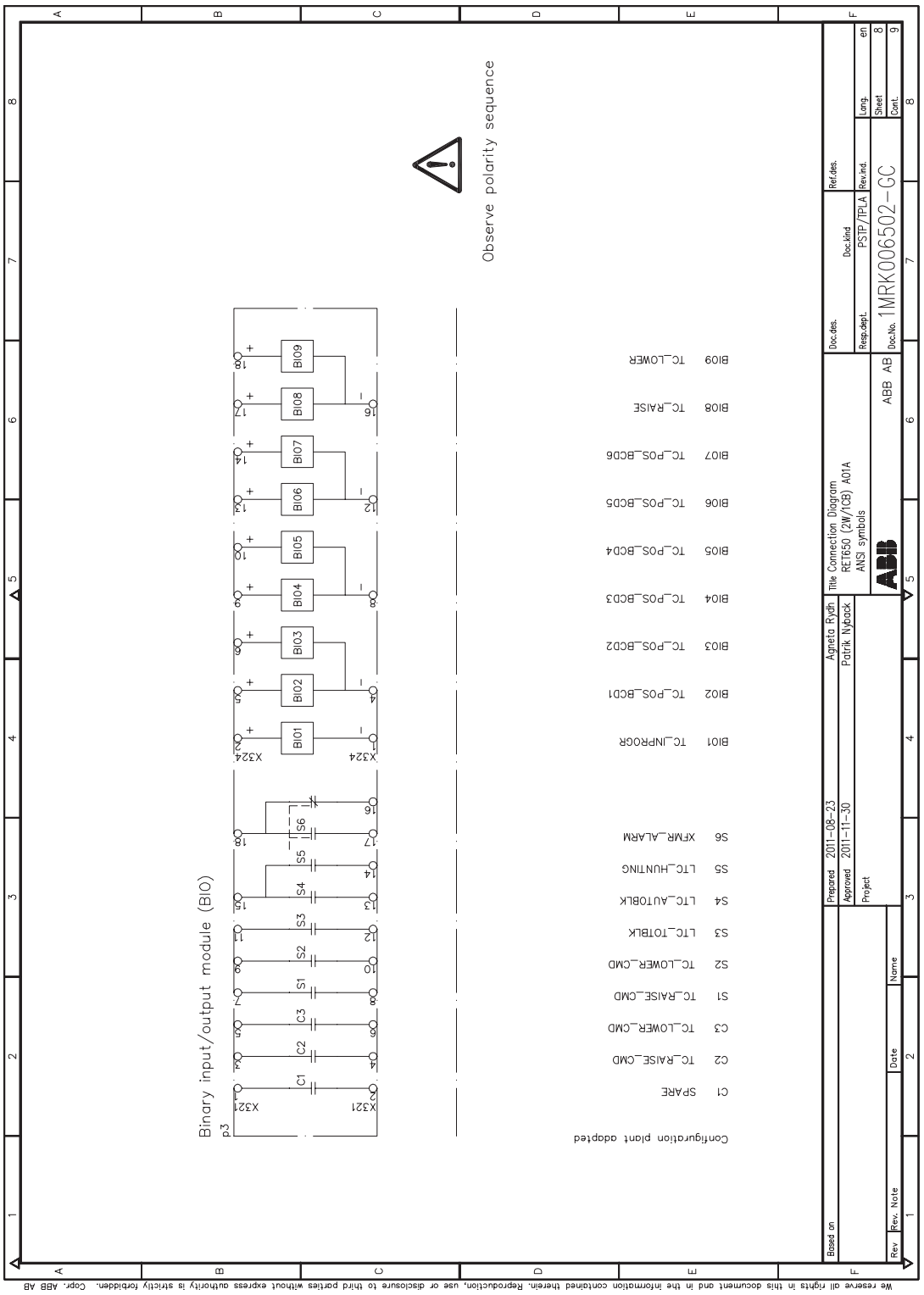
Observe polarity sequence
Binary input/output module (BIO)
p3
X321
X324
C1
C2
C3
S1
S2
S3
S4
S5
S6
BI01
BI02
BI03
BI04
BI05
BI06
BI07
BI08
BI09
SPARE
TC_RAISE_CMD
TC_LOWER_CMD
TC_RAISE_CMD
TC_LOWER_CMD
LTC_TOTBLK
LTC_AUTOBLK
LTC_HUNTING
XFMR_ALARM
TC_INPROGR
TC_POS_BCD1
TC_POS_BCD2
TC_POS_BCD3
TC_POS_BCD4
TC_POS_BCD5
TC_POS_BCD6
TC_RAISE
TC_LOWER
Configuration plant adapted
Based on
Rev
Rev. Note
Date
Name
Prepared
2011-08-23
Agneta Rydh
Approved
2011-11-30
Patrik Nyback
Project
Title Connection Diagram
RET650 (2W/1CB) A01A
ANSI symbols
ABB AB
Doc.des.
Doc.No. 1MRK006502-GC
Doc.kind
PSTP/TPLA
Resp.dept.
Ref.des.
Rev.ind.
Lang.
en
Sheet
8
Cont.
9
We reserve all rights in this document and in the information contained therein. Reproduction, use or disclosure to third parties without express authority is strictly forbidden. Copr. ABB AB

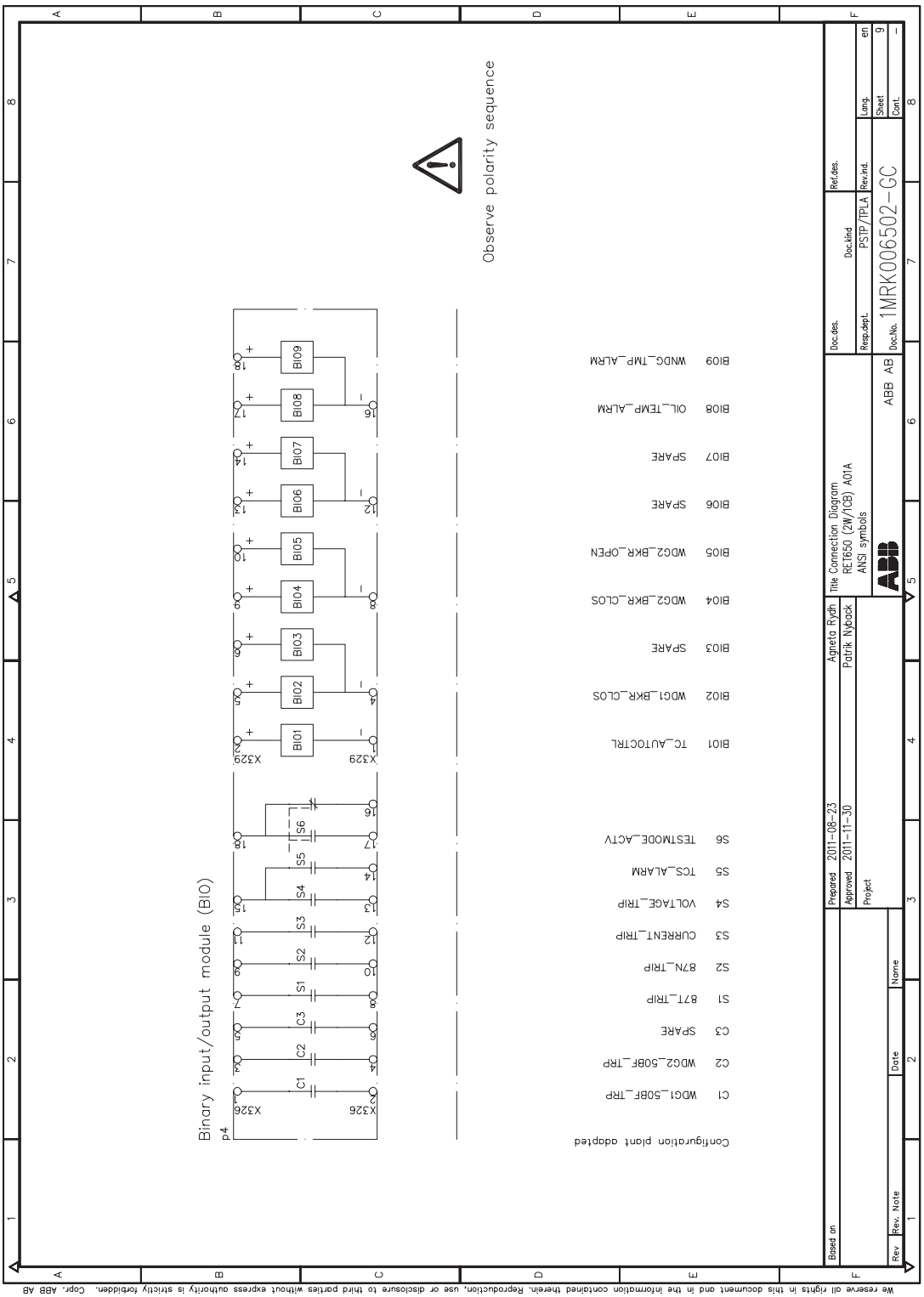
Observe polarity sequence
Binary input/output module (BIO)
X329
X326
BIO1 TC_AUTOCTRL
BIO2 WDG1_BKR_CLOS
BIO3 SPARE
BIO4 WDG2_BKR_CLOS
BIO5 WDG2_BKR_OPEN
BIO6 SPARE
BIO7 SPARE
BIO8 OIL_TEMP_ALRM
BIO9 WNDG_TMP_ALRM
C1 WDG1_50BF_TRP
C2 WDG2_50BF_TRP
C3 SPARE
S1 87T_TRIP
S2 87N_TRIP
S3 CURRENT_TRIP
S4 VOLTAGE_TRIP
S5 TCS_ALARM
S6 TESTMODE_ACTV
Configuration plant adopted
Agneta Rydh
Patrik Nyback
Prepared 2011-08-23
Approved 2011-11-30
Project
Title Connection Diagram
RET650 (2W/1CB) A01A
ANSI symbols
ABB AB
Doc.No. 1MRK006502-GC
Doc.kind PSTP/TPLA
Sheet 9
Cont. -
Lang. en
Based on
Rev Rev. Note Date Name
We reserve all rights in this document and in the information contained therein. Reproduction, use or disclosure to third parties without express authority is strictly forbidden. Copr. ABB AB

17.5.3 Connection diagrams for RET650 A05A

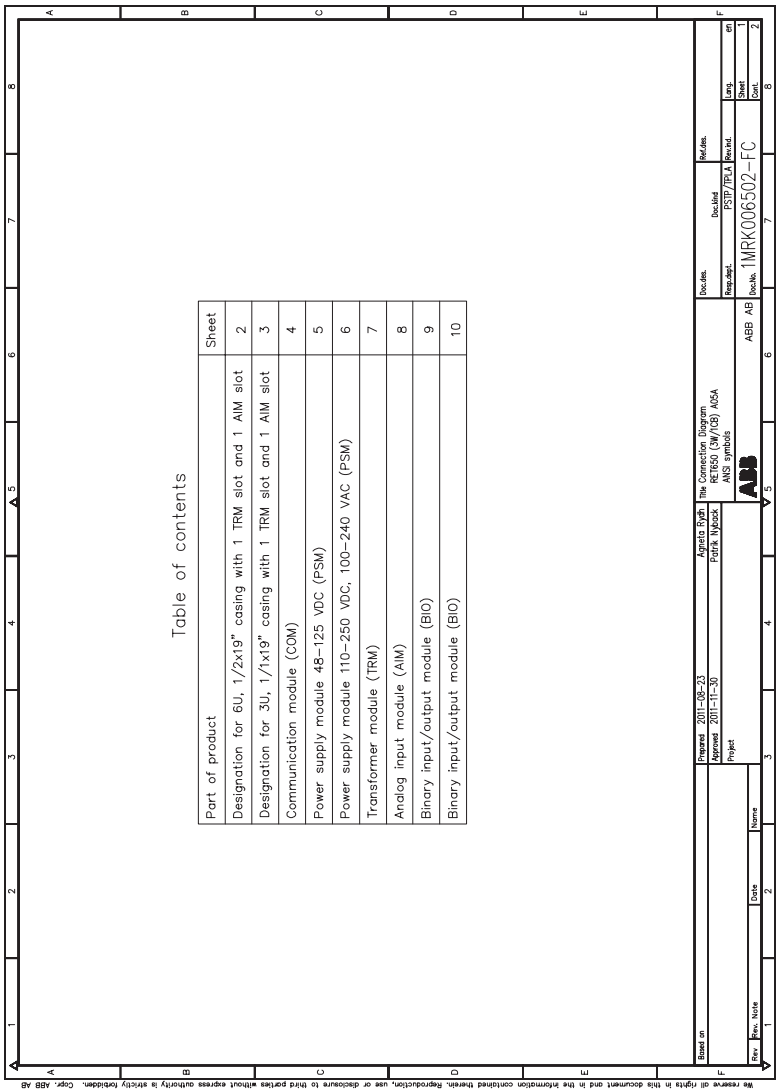

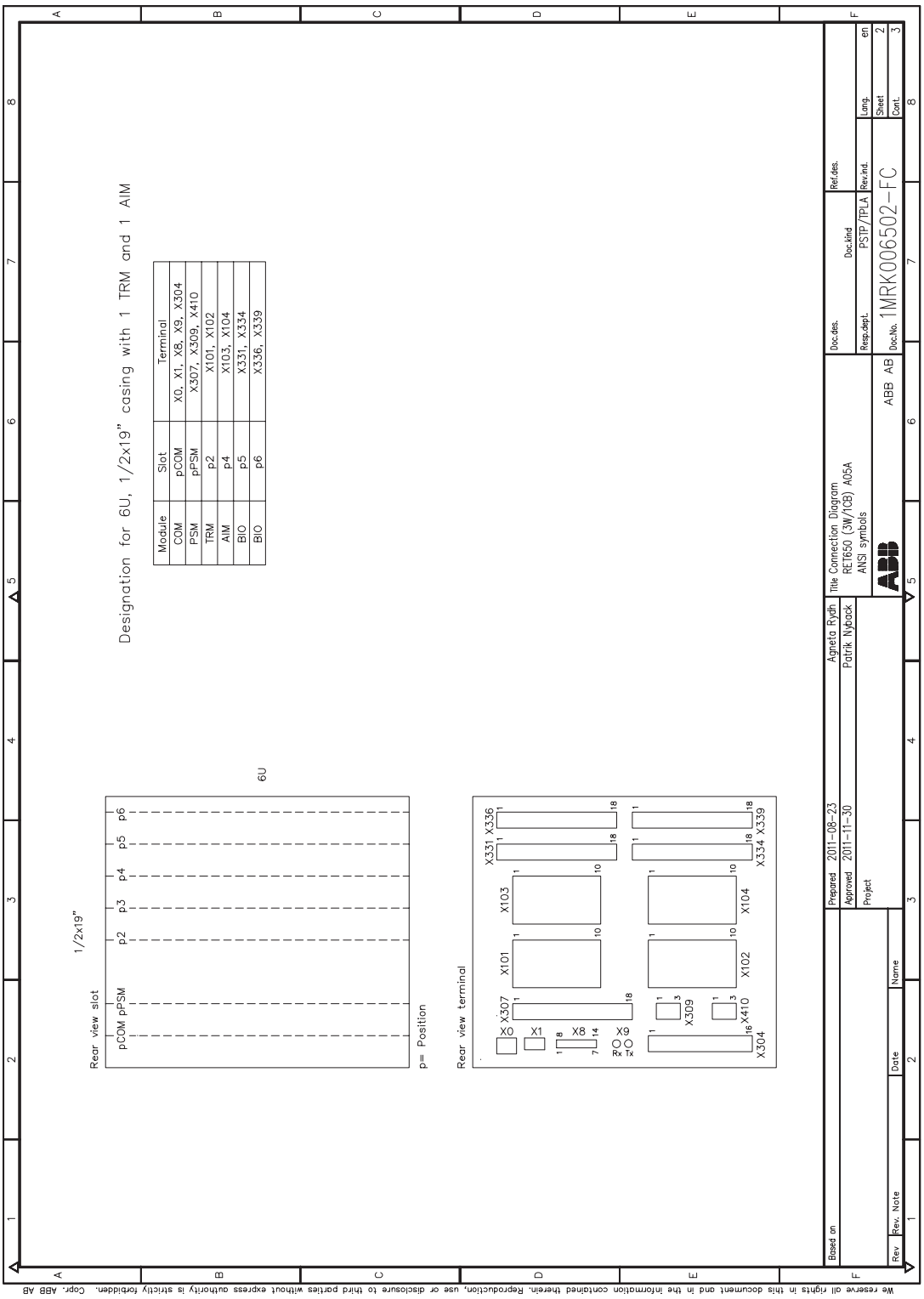
Designation for 6U, 1/2x19" casing with 1 TRM and 1 AIM
Module
Slot
Terminal
COM
pCOM
X0, X1, X8, X9, X304
PSM
pPSM
X307, X309, X410
TRM
p2
X101, X102
AIM
p4
X103, X104
BIO
p5
X331, X334
BIO
p6
X336, X339
6U
1/2x19"
Rear view slot
pCOM pPSM
p2 p3 p4 p5 p6
p= Position
Rear view terminal
X307
X101
X103
X331 X336
X0
X1
X8
X9
X309
X410
X304
X102
X104
X334 X339
Agneta Rydh
Patrik Nyback
Prepared 2011-08-23
Approved 2011-11-30
Project
Based on
Rev
Rev. Note
Date
Name
Title Connection Diagram
RET650 (3W/1CB) A05A
ANSI symbols
ABB AB
Doc.des.
Doc.kind
PSTP/TPLA
Resp.dept.
Doc.No. 1MRK006502-FC
Ref.des.
Rev.ind.
Lang. en
Sheet 2
Cont. 3
We reserve all rights in this document and in the information contained therein. Reproduction, use or disclosure to third parties without express authority is strictly forbidden. Copr. ABB AB

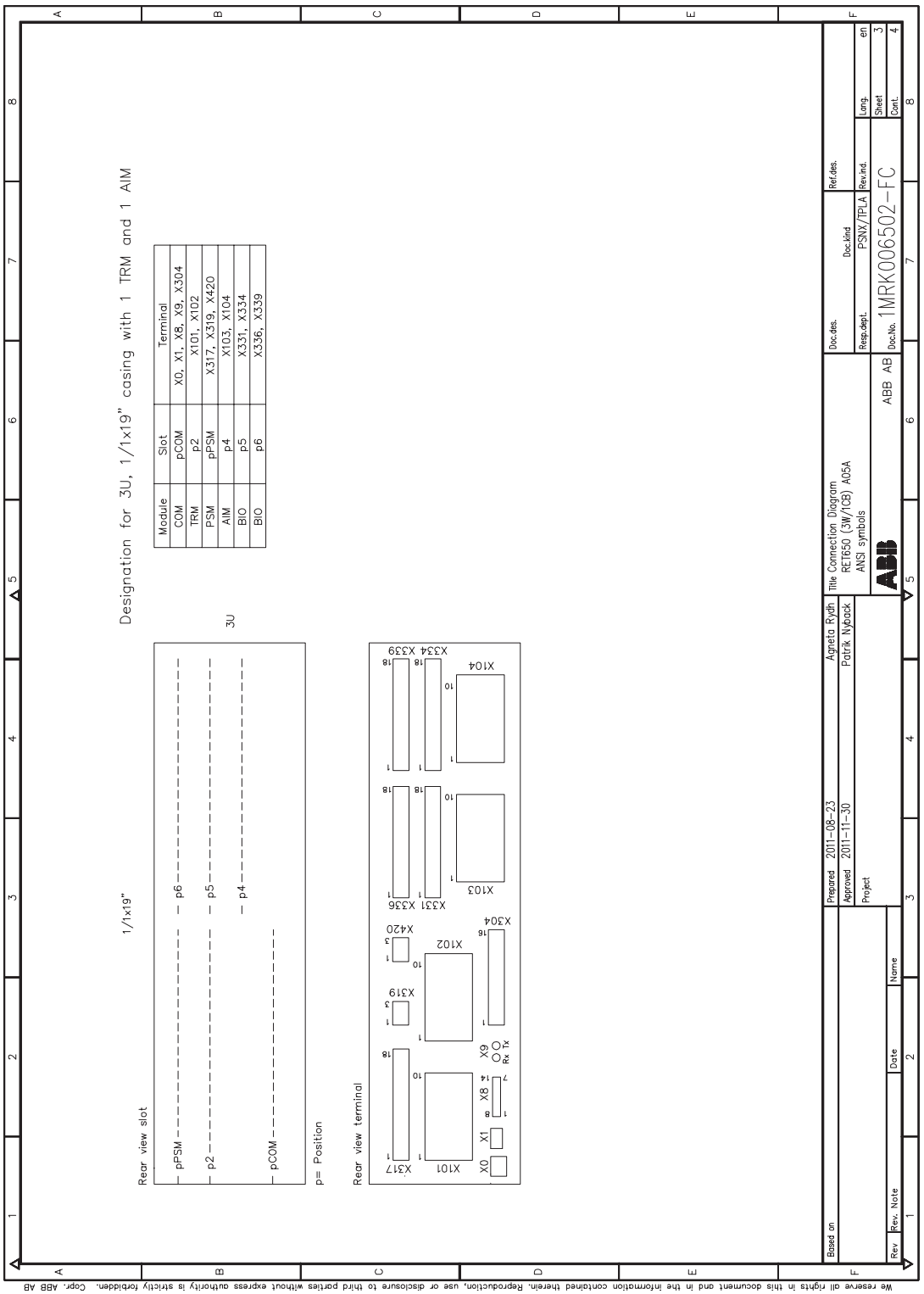
Designation for 3U, 1/1x19" casing with 1 TRM and 1 AIM
Module | Slot | Terminal
COM | pCOM | X0, X1, X8, X9, X304
TRM | p2 | X101, X102
PSM | pPSM | X317, X319, X420
AIM | p4 | X103, X104
BIO | p5 | X331, X334
BIO | p6 | X336, X339
Rear view slot
1/1x19"
3U
pPSM
p2
pCOM
p6
p5
p4
p= Position
Rear view terminal
X317
X101
X0
X1
X8
X9
Rx
Tx
X319
X102
X420
X331
X336
X103
X334
X339
X104
X304
Prepared 2011-08-23 Agneta Rydh
Approved 2011-11-30 Patrik Nyback
Project
Based on
Rev Rev. Note Date Name
Title Connection Diagram
RET650 (3W/10B) A05A
ANSI symbols
ABB AB
Doc.des. Doc.kind
Resp.dept. PSNX/TPLA
Doc.No. 1MRK006502-FC
Ref.des.
Rev.ind.
Lang. en
Sheet 3
Cont. 4
We reserve all rights in this document and in the information contained therein. Reproduction, use or disclosure to third parties without express authority is strictly forbidden. Copr. ABB AB

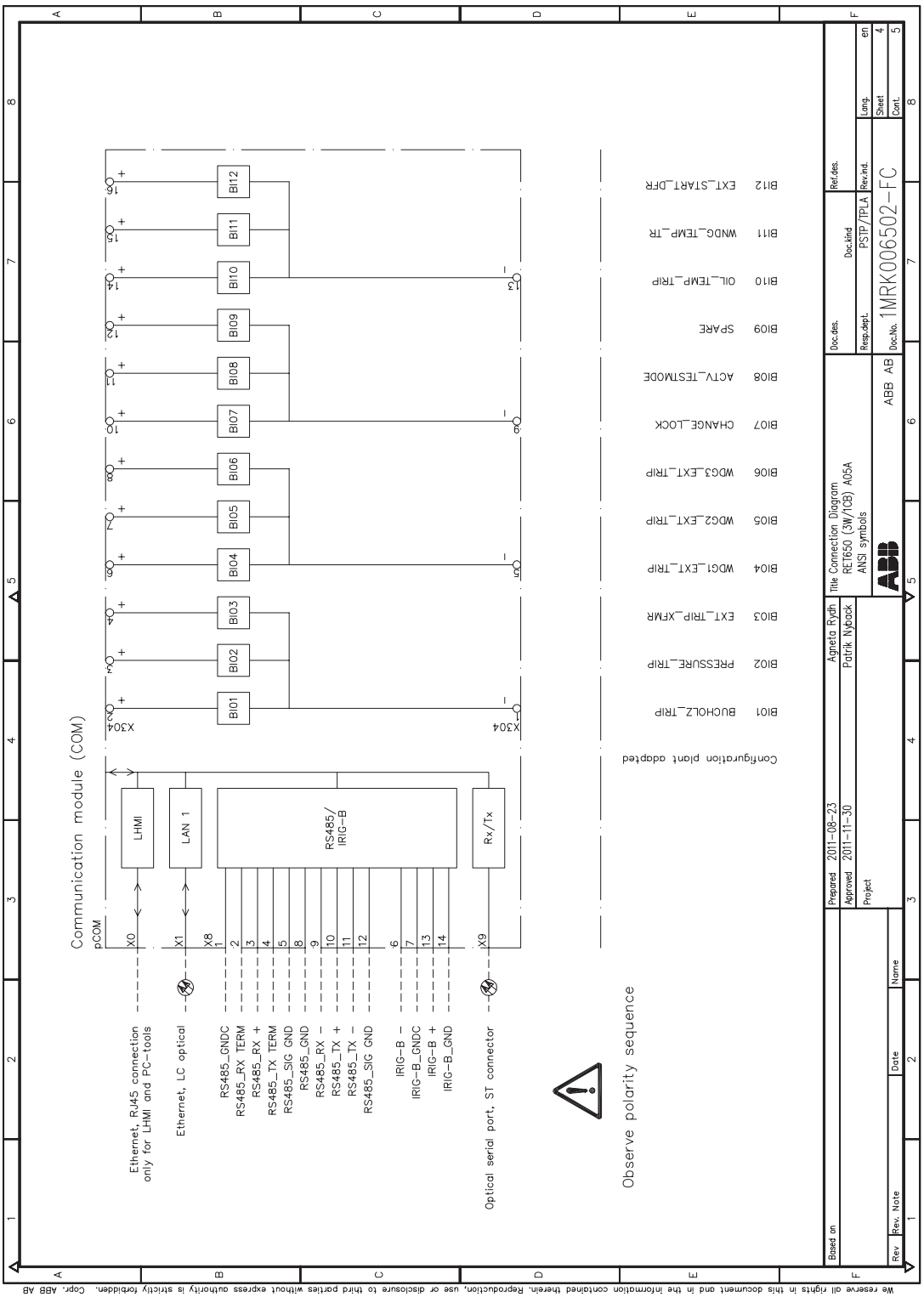
Communication module (COM)
pCOM
LHMI
LAN 1
RS485/ IRIG-B
Rx/Tx
X0
X1
X8
X9
Ethernet, RJ45 connection only for LHMI and PC-tools
Ethernet, LC optical
RS485_GNDC
RS485_RX TERM
RS485_RX +
RS485_TX TERM
RS485_SIG GND
RS485_GND
RS485_RX –
RS485_TX +
RS485_TX –
RS485_SIG GND
IRIG-B –
IRIG-B_GNDC
IRIG-B +
IRIG-B_GND
Optical serial port, ST connector
Observe polarity sequence
X304
BI01
BI02
BI03
BI04
BI05
BI06
BI07
BI08
BI09
BI10
BI11
BI12
Configuration plant adapted
BI01 BUCHOLZ_TRIP
BI02 PRESSURE_TRIP
BI03 EXT_TRIP_XFMR
BI04 WDG1_EXT_TRIP
BI05 WDG2_EXT_TRIP
BI06 WDG3_EXT_TRIP
BI07 CHANGE_LOCK
BI08 ACTV_TESTMODE
BI09 SPARE
BI10 OIL_TEMP_TRIP
BI11 WNDG_TEMP_TR
BI12 EXT_START_DFR
Prepared 2011-08-23 Agneta Rydh
Approved 2011-11-30 Patrik Nyback
Project
Title Connection Diagram
RET650 (3W/1CB) A05A
ANSI symbols
ABB AB
Doc.No. 1MRK006502-FC
Doc.kind PSTP/TPLA
Lang. en
Sheet 4
Cont. 5
Based on
Rev Rev. Note Date Name
We reserve all rights in this document and in the information contained therein. Reproduction, use or disclosure to third parties without express authority is strictly forbidden. Copr. ABB AB

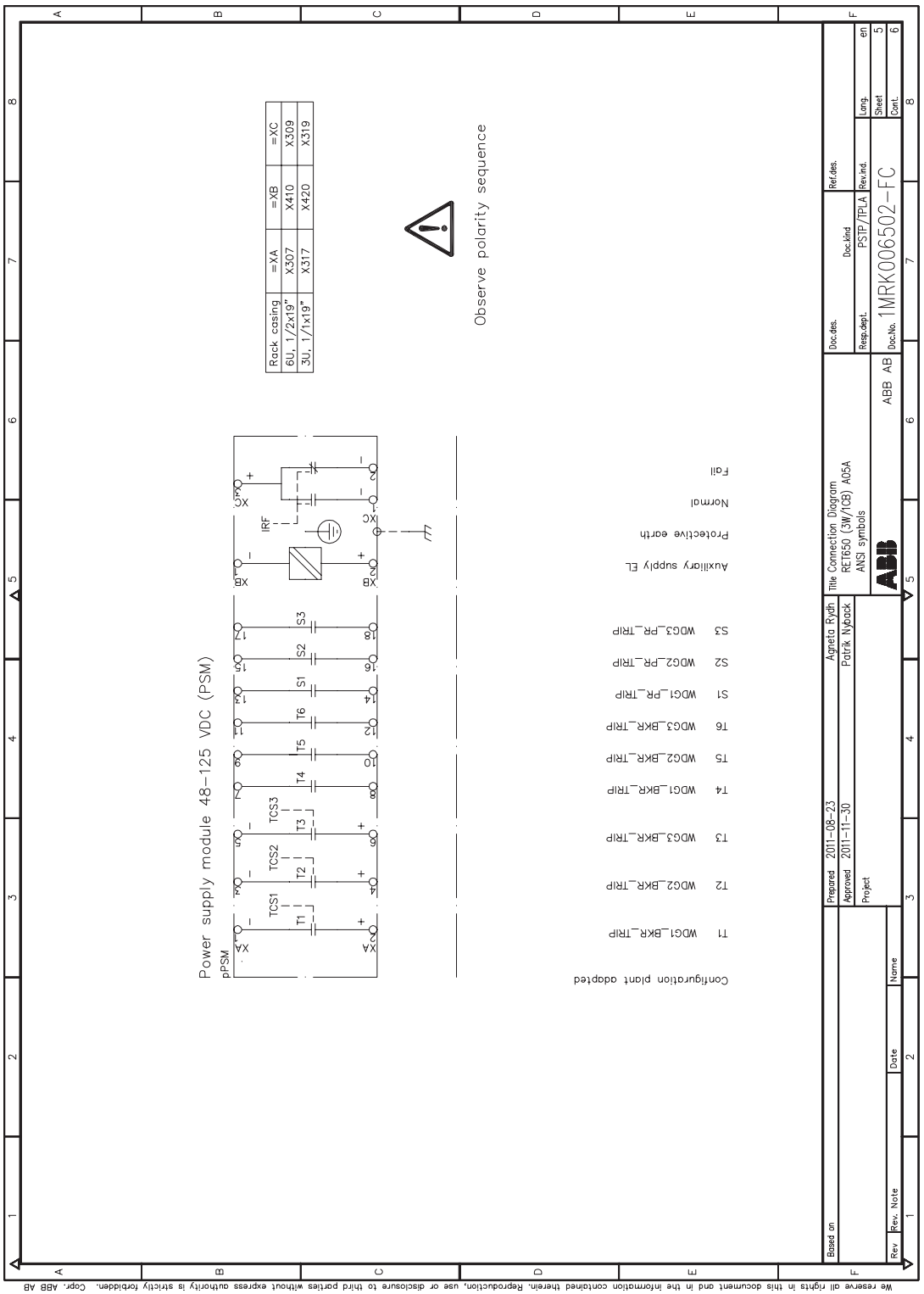
Power supply module 48-125 VDC (PSM)
pPSM
Observe polarity sequence
Rack casing | =XA | =XB | =XC
6U, 1/2x19" | X307 | X410 | X309
3U, 1/1x19" | X317 | X420 | X319
Configuration plant adapted
T1 WDG1_BKR_TRIP
T2 WDG2_BKR_TRIP
T3 WDG3_BKR_TRIP
T4 WDG1_BKR_TRIP
T5 WDG2_BKR_TRIP
T6 WDG3_BKR_TRIP
S1 WDG1_PR_TRIP
S2 WDG2_PR_TRIP
S3 WDG3_PR_TRIP
Auxiliary supply EL
Protective earth
Normal
Fail
Title Connection Diagram
RET650 (3W/1CB) A05A
ANSI symbols
ABB AB
Prepared 2011-08-23 Agneta Rydh
Approved 2011-11-30 Patrik Nyback
Doc.No. 1MRK006502-FC
Resp.dept. PSTP/TPLA
Rev.ind.
Lang. en
Sheet 5
Cont. 6
Based on
Rev Rev. Note Date Name
We reserve all rights in this document and in the information contained therein. Reproduction, use or disclosure to third parties without express authority is strictly forbidden. Copr. ABB AB

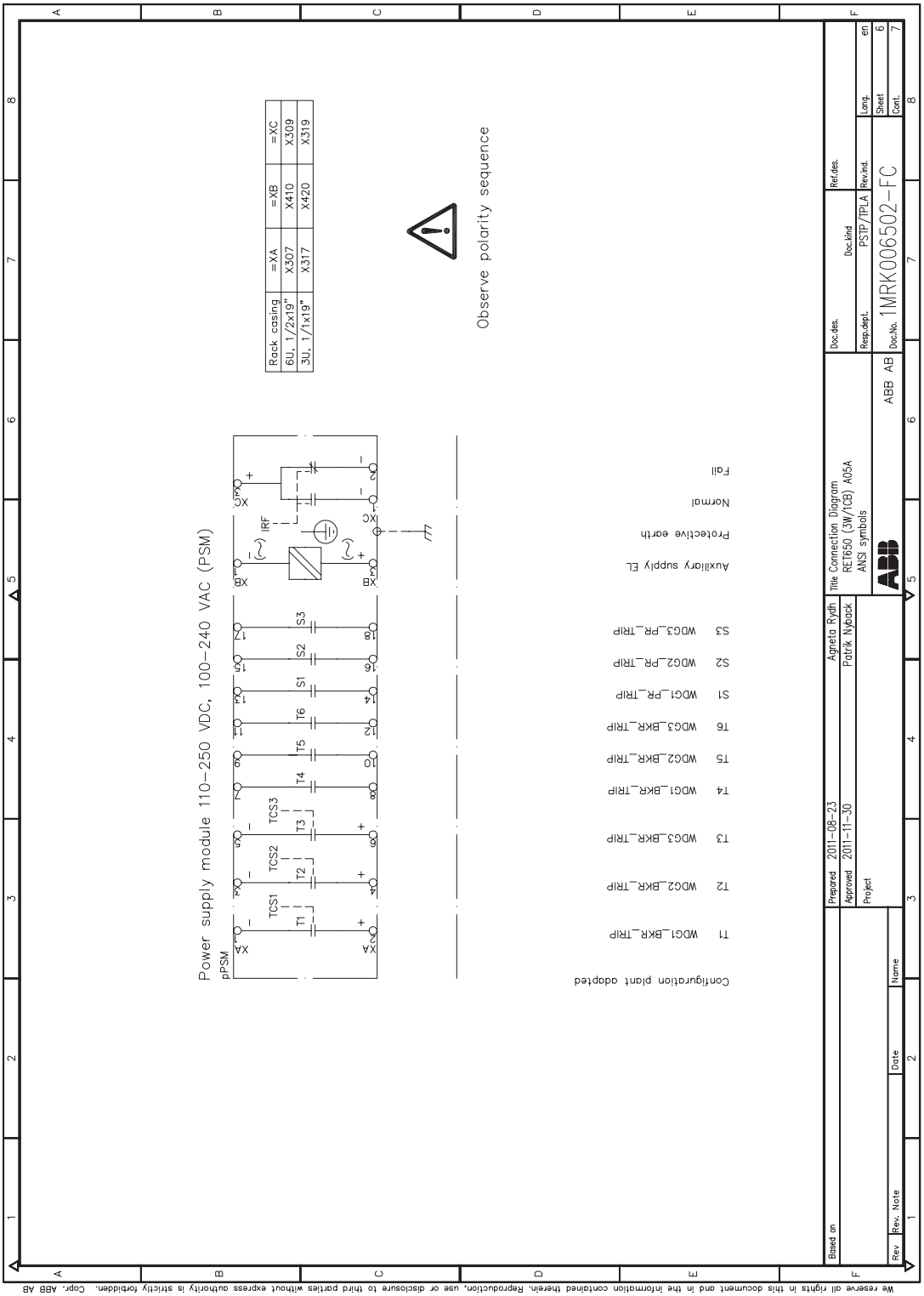
Power supply module 110–250 VDC, 100–240 VAC (PSM)
pPSM
Observe polarity sequence
Rack casing | =XA | =XB | =XC
6U, 1/2x19" | X307 | X410 | X309
3U, 1/1x19" | X317 | X420 | X319
Configuration plant adapted
T1 WDG1_BKR_TRIP
T2 WDG2_BKR_TRIP
T3 WDG3_BKR_TRIP
T4 WDG1_BKR_TRIP
T5 WDG2_BKR_TRIP
T6 WDG3_BKR_TRIP
S1 WDG1_PR_TRIP
S2 WDG2_PR_TRIP
S3 WDG3_PR_TRIP
Auxiliary supply EL
Protective earth
Normal
Fail
Prepared 2011-08-23 Agneta Rydh
Approved 2011-11-30 Patrik Nyback
Project
Based on
Title Connection Diagram
RET650 (3W/1CB) A05A
ANSI symbols
ABB AB
Doc.No. 1MRK006502-FC
Doc.kind PSTP/TPLA
Lang. en
Sheet 6
Cont. 7
Rev Rev. Note Date Name
We reserve all rights in this document and in the information contained therein. Reproduction, use or disclosure to third parties without express authority is strictly forbidden. Copr. ABB AB

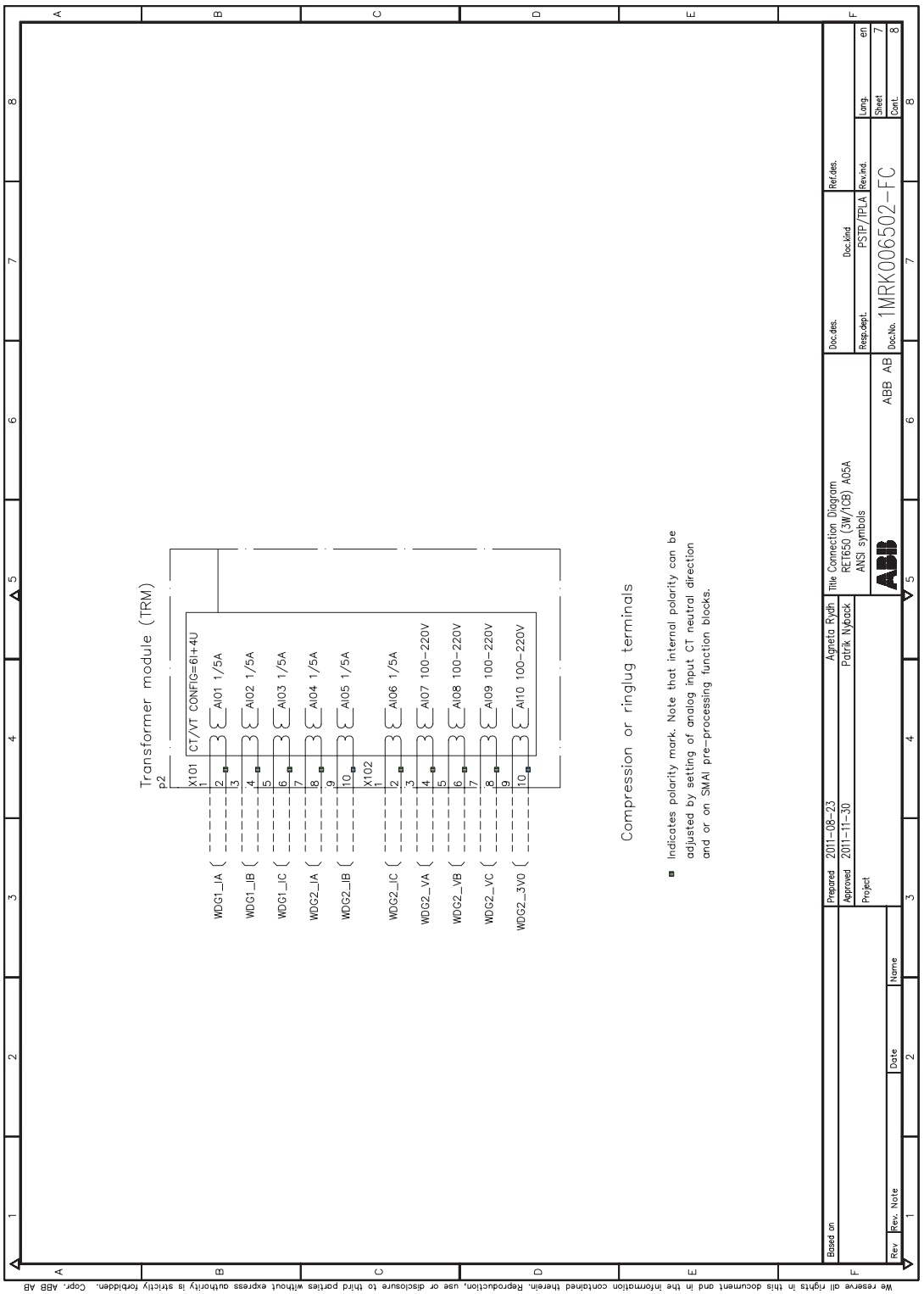
Transformer module (TRM)
p2
X101
CT/VT CONFIG=6I+4U
AI01 1/5A
AI02 1/5A
AI03 1/5A
AI04 1/5A
AI05 1/5A
X102
AI06 1/5A
AI07 100-220V
AI08 100-220V
AI09 100-220V
AI10 100-220V
WDG1_IA
WDG1_IB
WDG1_IC
WDG2_IA
WDG2_IB
WDG2_IC
WDG2_VA
WDG2_VB
WDG2_VC
WDG2_3V0
Compression or ringlug terminals
Indicates polarity mark. Note that internal polarity can be adjusted by setting of analog input CT neutral direction and or on SMAI pre-processing function blocks.
Prepared 2011-08-23 Agneta Rydh
Approved 2011-11-30 Patrik Nyback
Project
Based on
Rev Rev. Note Date Name
Title Connection Diagram
RET650 (3W/1CB) A05A
ANSI symbols
ABB
ABB AB
Doc.des.
Doc.kind PSTP/TPLA
Resp.dept.
Doc.No. 1MRK006502-FC
Ref.des.
Rev.ind.
Lang. en
Sheet 7
Cont. 8
We reserve all rights in this document and in the information contained therein. Reproduction, use or disclosure to third parties without express authority is strictly forbidden. Copr. ABB AB

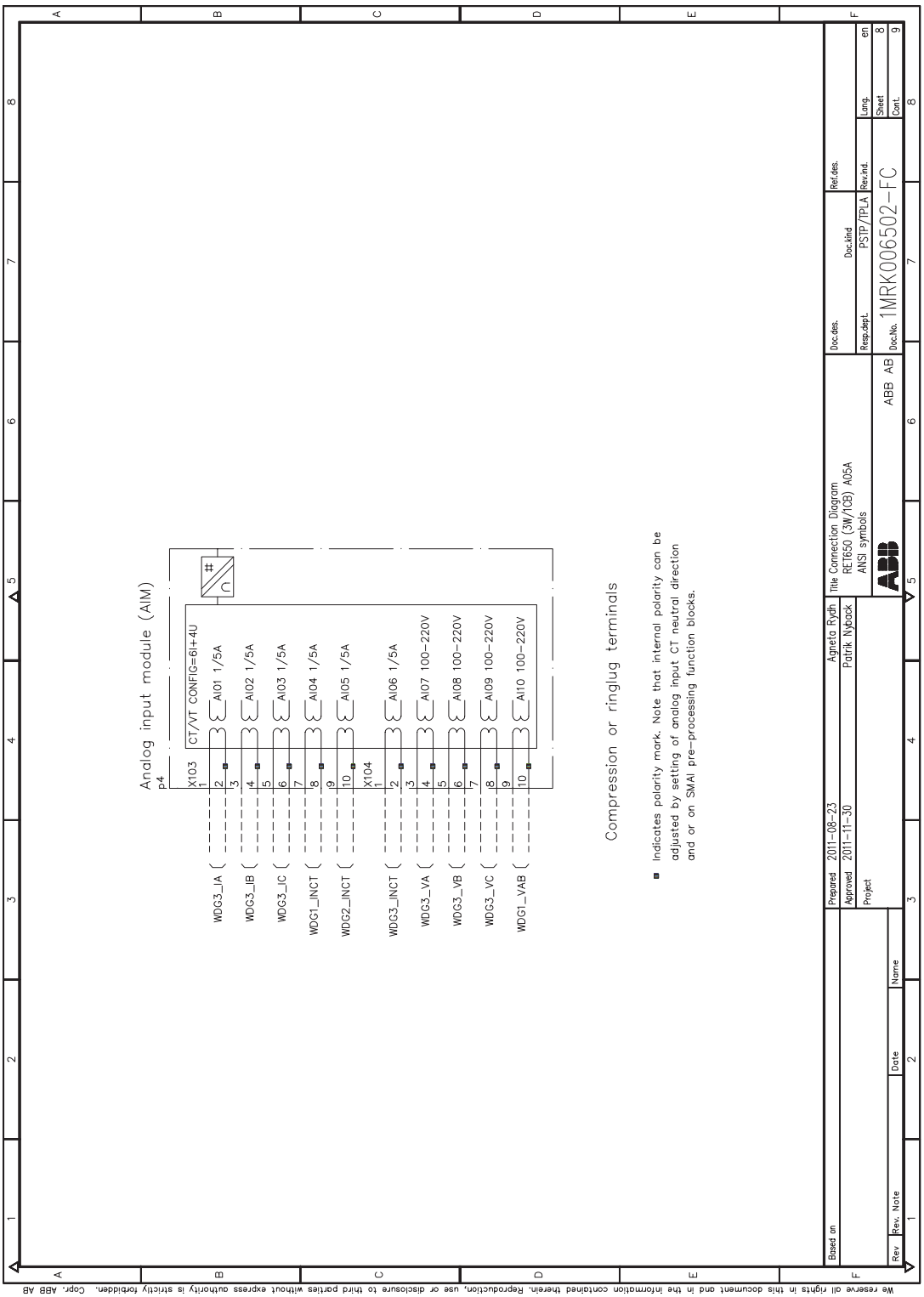
Analog input module (AIM)
p4
X103
CT/VT CONFIG=6I+4U
AI01 1/5A
AI02 1/5A
AI03 1/5A
AI04 1/5A
AI05 1/5A
X104
AI06 1/5A
AI07 100-220V
AI08 100-220V
AI09 100-220V
AI10 100-220V
WDG3_IA
WDG3_IB
WDG3_IC
WDG1_INCT
WDG2_INCT
WDG3_INCT
WDG3_VA
WDG3_VB
WDG3_VC
WDG1_VAB
Compression or ringlug terminals
Indicates polarity mark. Note that internal polarity can be adjusted by setting of analog input CT neutral direction and or on SMAI pre-processing function blocks.
Prepared 2011-08-23 Agneta Rydh
Approved 2011-11-30 Patrik Nyback
Project
Based on
Rev Rev. Note Date Name
Title Connection Diagram
RET650 (3W/1CB) A05A
ANSI symbols
ABB AB
Doc.des.
Doc.No. 1MRK006502-FC
Doc.kind PSTP/TPLA
Ref.des.
Rev.ind.
Resp.dept.
Lang. en
Sheet 8
Cont. 9
We reserve all rights in this document and in the information contained therein. Reproduction, use or disclosure to third parties without express authority is strictly forbidden. Copr. ABB AB

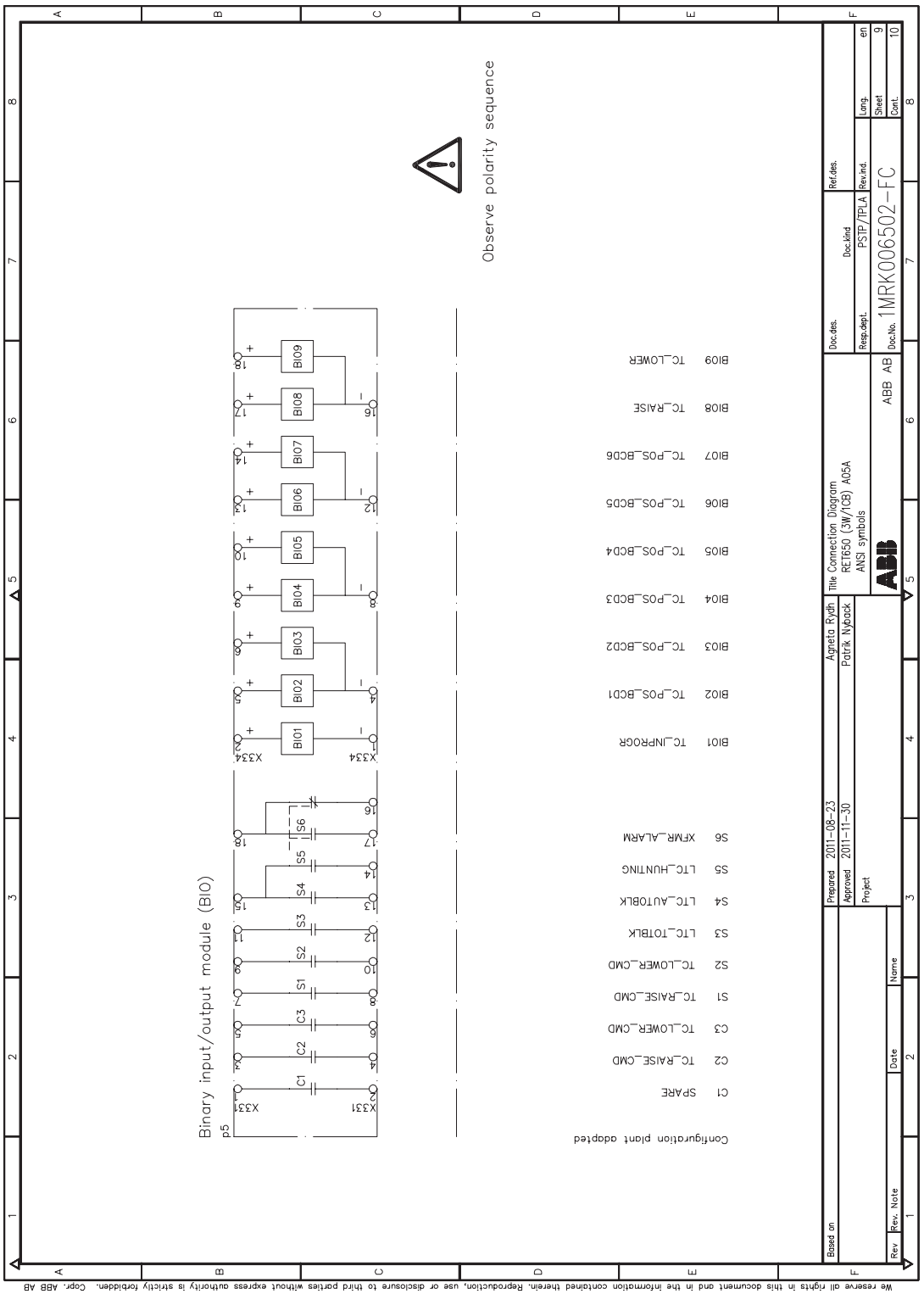

We reserve all rights in this document and in the information contained therein. Reproduction, use or disclosure to third parties without express authority is strictly forbidden. Copyr. ABB AB

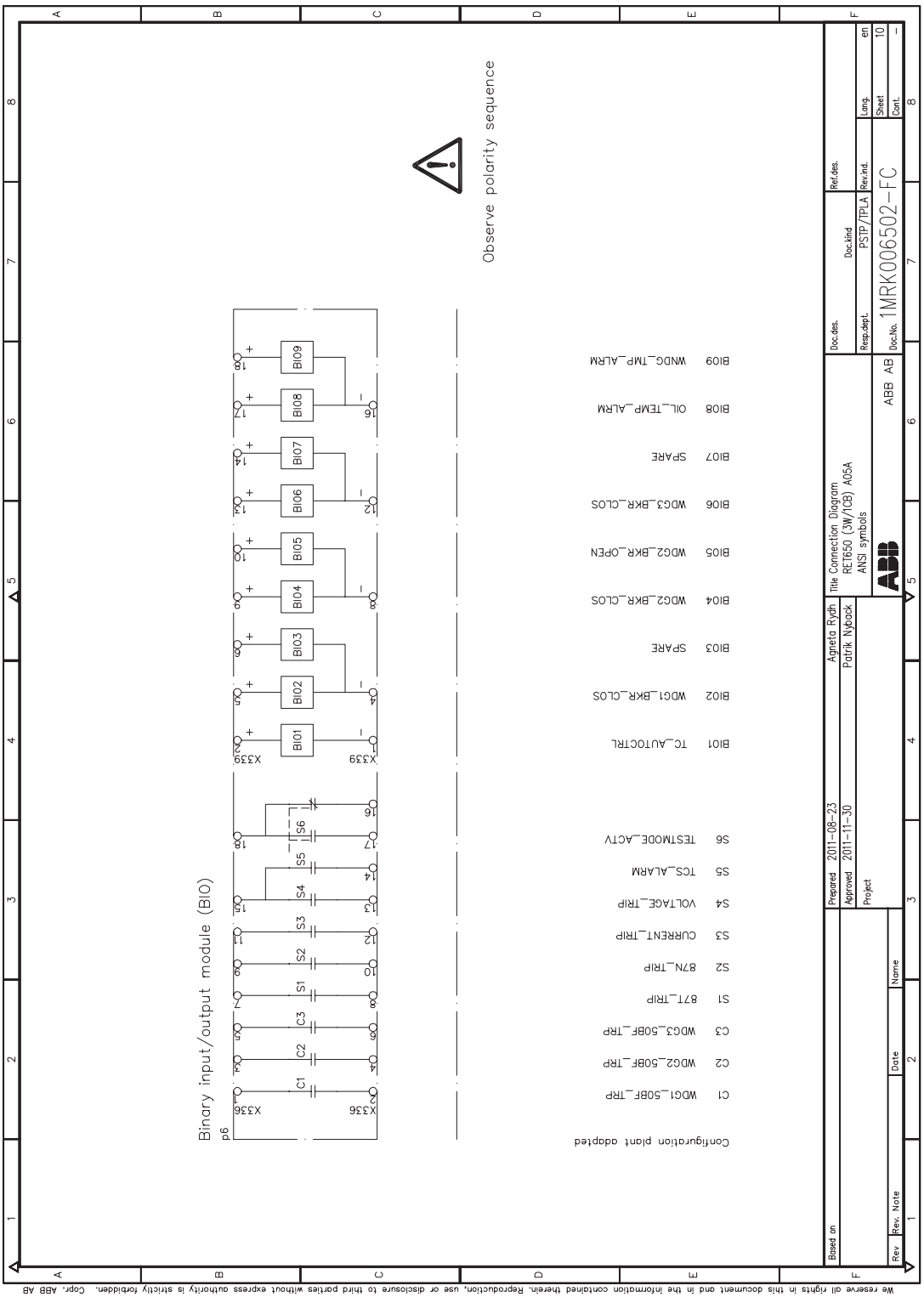
Observe polarity sequence
Binary input/output module (BIO)
X336
X339
BIO1 TC_AUTOCTRL
BIO2 WDG1_BKR_CLOS
BIO3 SPARE
BIO4 WDG2_BKR_CLOS
BIO5 WDG2_BKR_OPEN
BIO6 WDG3_BKR_CLOS
BIO7 SPARE
BIO8 OIL_TEMP_ALRM
BIO9 WNDG_TMP_ALRM
S6 TESTMODE_ACTV
S5 TCS_ALARM
S4 VOLTAGE_TRIP
S3 CURRENT_TRIP
S2 87N_TRIP
S1 87T_TRIP
C3 WDG3_50BF_TRP
C2 WDG2_50BF_TRP
C1 WDG1_50BF_TRP
Configuration plant adopted
Agneta Rydh
Patrik Nyback
Prepared 2011-08-23
Approved 2011-11-30
Project
Title Connection Diagram
RET650 (3W/1CB) A05A
ANSI symbols
ABB AB
Doc.des.
Doc.kind PSTP/TPLA
Resp.dept.
Doc.No. 1MRK006502-FC
Ref.des.
Rev.ind.
Lang. en
Sheet 10
Cont. -
Based on
Rev Rev. Note Date Name
We reserve all rights in this document and in the information contained therein. Reproduction, use or disclosure to third parties without express authority is strictly forbidden. Copr. ABB AB

17.5.4 Connection diagrams for RET650 A07A

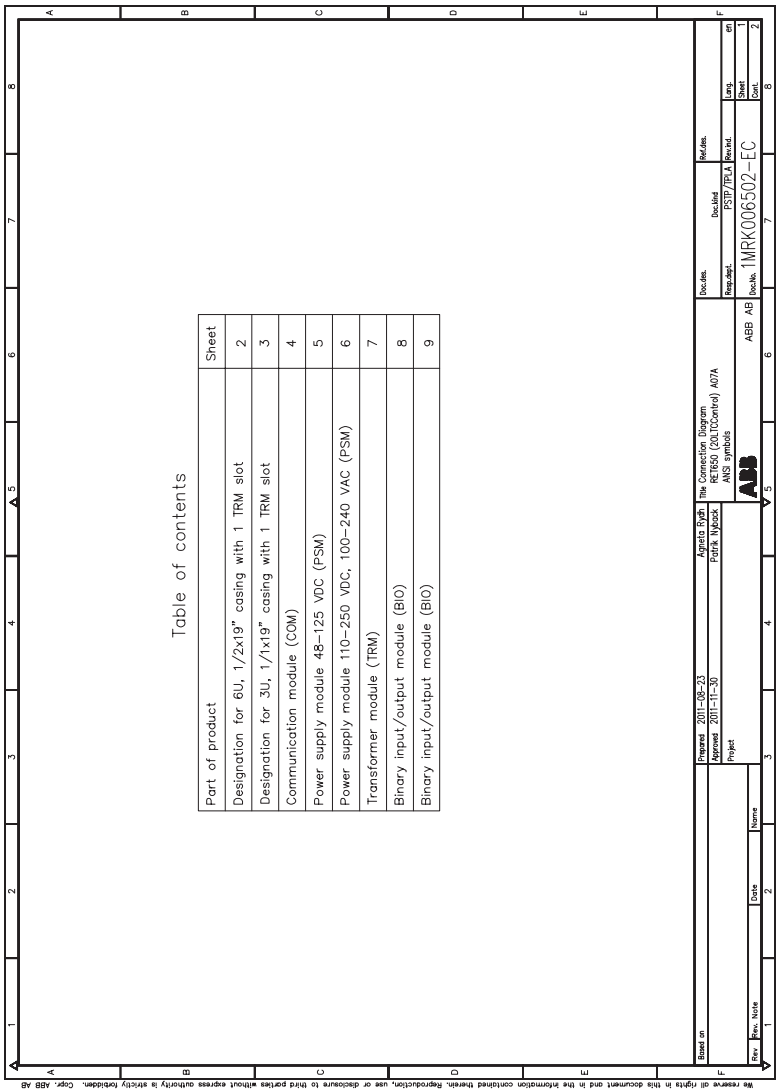

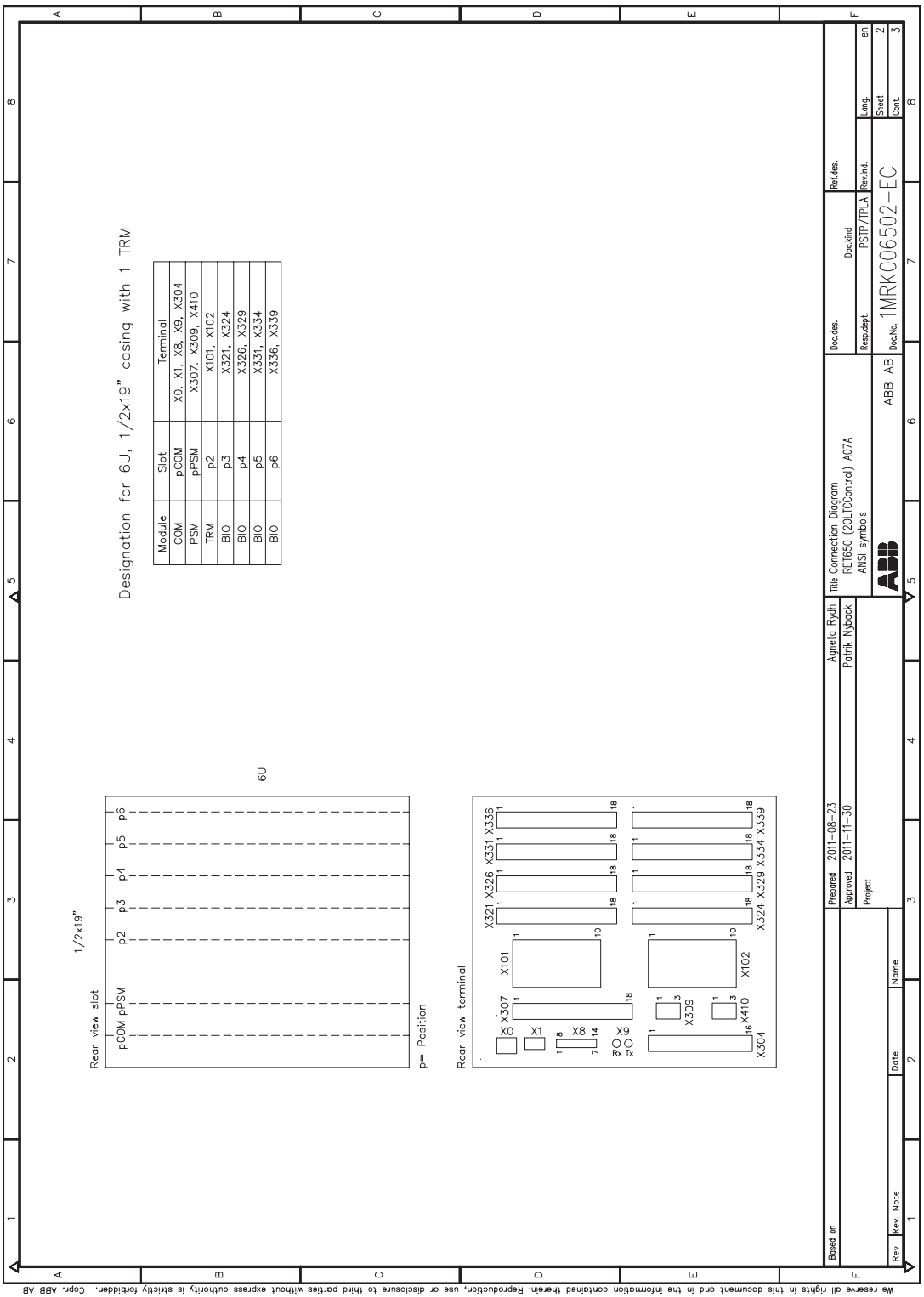
Designation for 6U, 1/2x19" casing with 1 TRM
Module
Slot
Terminal
COM
pCOM
X0, X1, X8, X9, X304
PSM
pPSM
X307, X309, X410
TRM
p2
X101, X102
BIO
p3
X321, X324
BIO
p4
X326, X329
BIO
p5
X331, X334
BIO
p6
X336, X339
6U
1/2x19"
Rear view slot
pCOM pPSM p2 p3 p4 p5 p6
p= Position
Rear view terminal
X307
X101
X102
X309
X410
X304
X321 X326 X331 X336
X324 X329 X334 X339
Prepared 2011-08-23
Agneta Rydh
Approved 2011-11-30
Patrik Nyback
Project
Based on
Rev Rev. Note Date Name
Title Connection Diagram
RET650 (2OLTCControl) A07A
ANSI symbols
ABB AB
Doc.des.
Doc.kind PSTP/TPLA
Resp.dept.
Doc.No. 1MRK006502-EC
Ref.des.
Rev.ind.
Lang. en
Sheet 2
Cont. 3
We reserve all rights in this document and in the information contained therein. Reproduction, use or disclosure to third parties without express authority is strictly forbidden. Copr. ABB AB

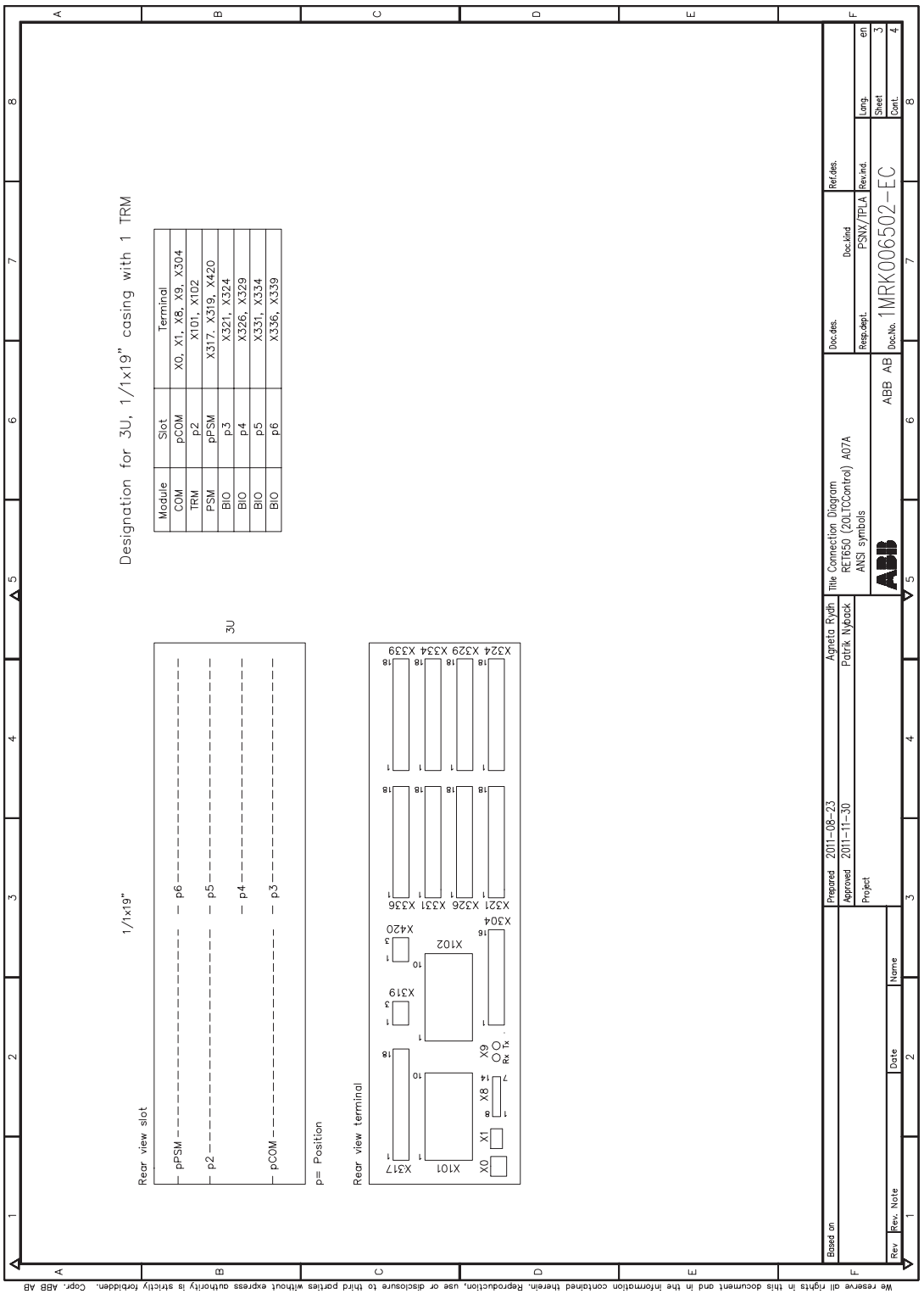
Designation for 3U, 1/1x19" casing with 1 TRM
Module
Slot
Terminal
COM
pCOM
X0, X1, X8, X9, X304
TRM
p2
X101, X102
PSM
pPSM
X317, X319, X420
BIO
p3
X321, X324
BIO
p4
X326, X329
BIO
p5
X331, X334
BIO
p6
X336, X339
Rear view slot
1/1x19"
3U
pPSM
p2
pCOM
p6
p5
p4
p3
p= Position
Rear view terminal
X317
X101
X0
X1
X8
X9
Rx
Tx
X319
X102
X420
X304
X321
X326
X331
X336
X324
X329
X334
X339
Rev
Rev. Note
Date
Name
Based on
Prepared
2011-08-23
Agneta Rydh
Approved
2011-11-30
Patrik Nyback
Project
Title
Connection Diagram
RET650 (20LTCControl) A07A
ANSI symbols
ABB AB
Doc.des.
Doc.kind
PSNX/TPLA
Resp.dept.
Doc.No.
1MRK006502-EC
Ref.des.
Rev.ind.
Lang.
en
Sheet
3
Cont.
4
We reserve all rights in this document and in the information contained therein. Reproduction, use or disclosure to third parties without express authority is strictly forbidden. Copr. ABB AB

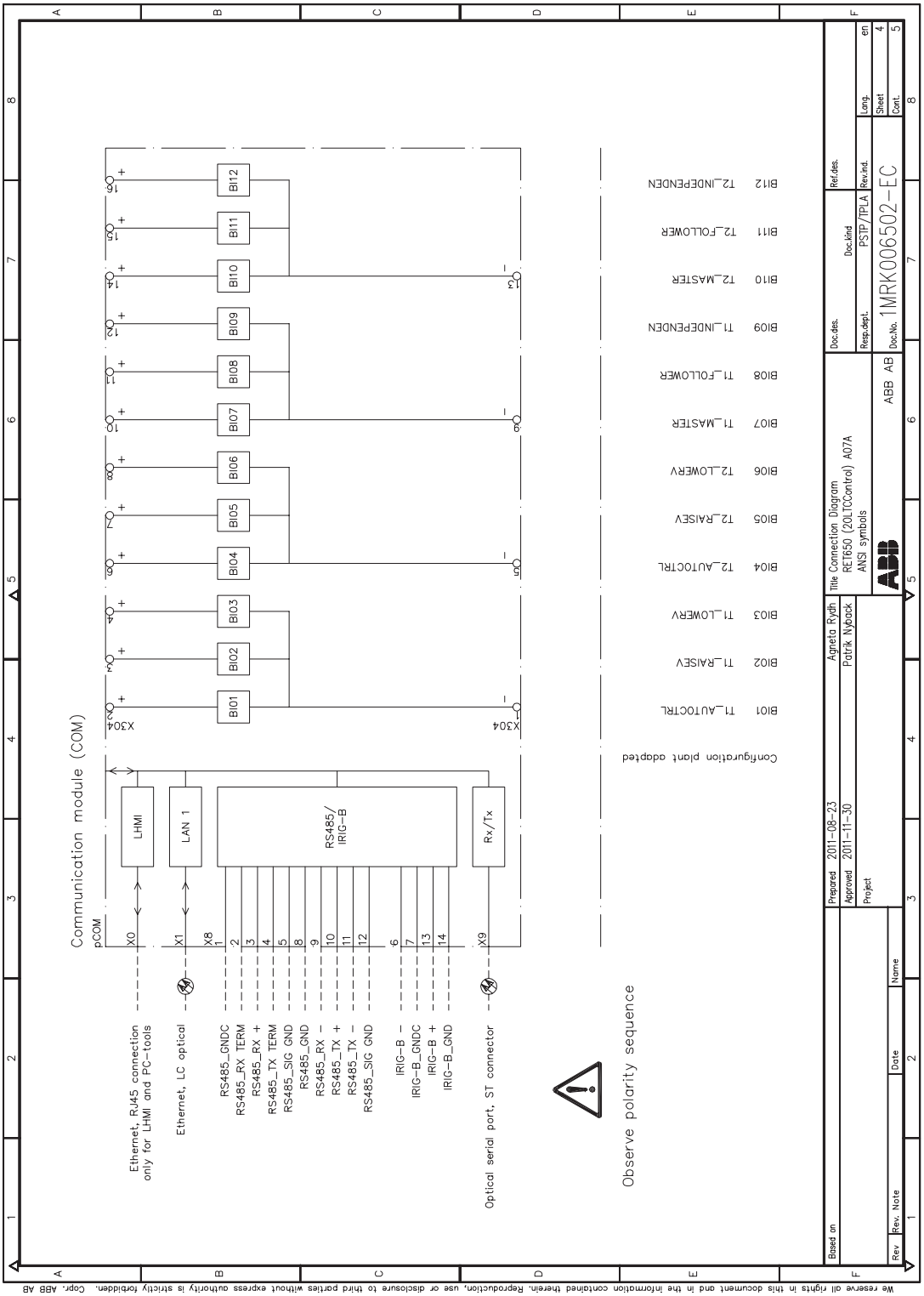
Communication module (COM)
pCOM
X0
X1
X8
LHMI
LAN 1
RS485/
IRIG-B
Rx/Tx
Ethernet, RJ45 connection
only for LHMI and PC-tools
Ethernet, LC optical
RS485_GNDC
RS485_RX TERM
RS485_RX +
RS485_TX TERM
RS485_SIG GND
RS485_GND
RS485_RX –
RS485_TX +
RS485_TX –
RS485_SIG GND
IRIG-B –
IRIG-B_GNDC
IRIG-B +
IRIG-B_GND
Optical serial port, ST connector
Observe polarity sequence
X304
BI01 T1_AUTOCTRL
BI02 T1_RAISEV
BI03 T1_LOWERV
BI04 T2_AUTOCTRL
BI05 T2_RAISEV
BI06 T2_LOWERV
BI07 T1_MASTER
BI08 T1_FOLLOWER
BI09 T1_INDEPENDEN
BI10 T2_MASTER
BI11 T2_FOLLOWER
BI12 T2_INDEPENDEN
Configuration plant adapted
Prepared 2011-08-23 Agneta Rydh
Approved 2011-11-30 Patrik Nyback
Project
Title Connection Diagram
RET650 (2OLTCControl) A07A
ANSI symbols
ABB AB
Doc.No. 1MRK006502-EC
Doc.kind PSTP/TPLA
Lang. en
Sheet 4
Cont. 5
Rev Rev. Note Date Name
Based on
We reserve all rights in this document and in the information contained therein. Reproduction, use or disclosure to third parties without express authority is strictly forbidden. Copr. ABB AB

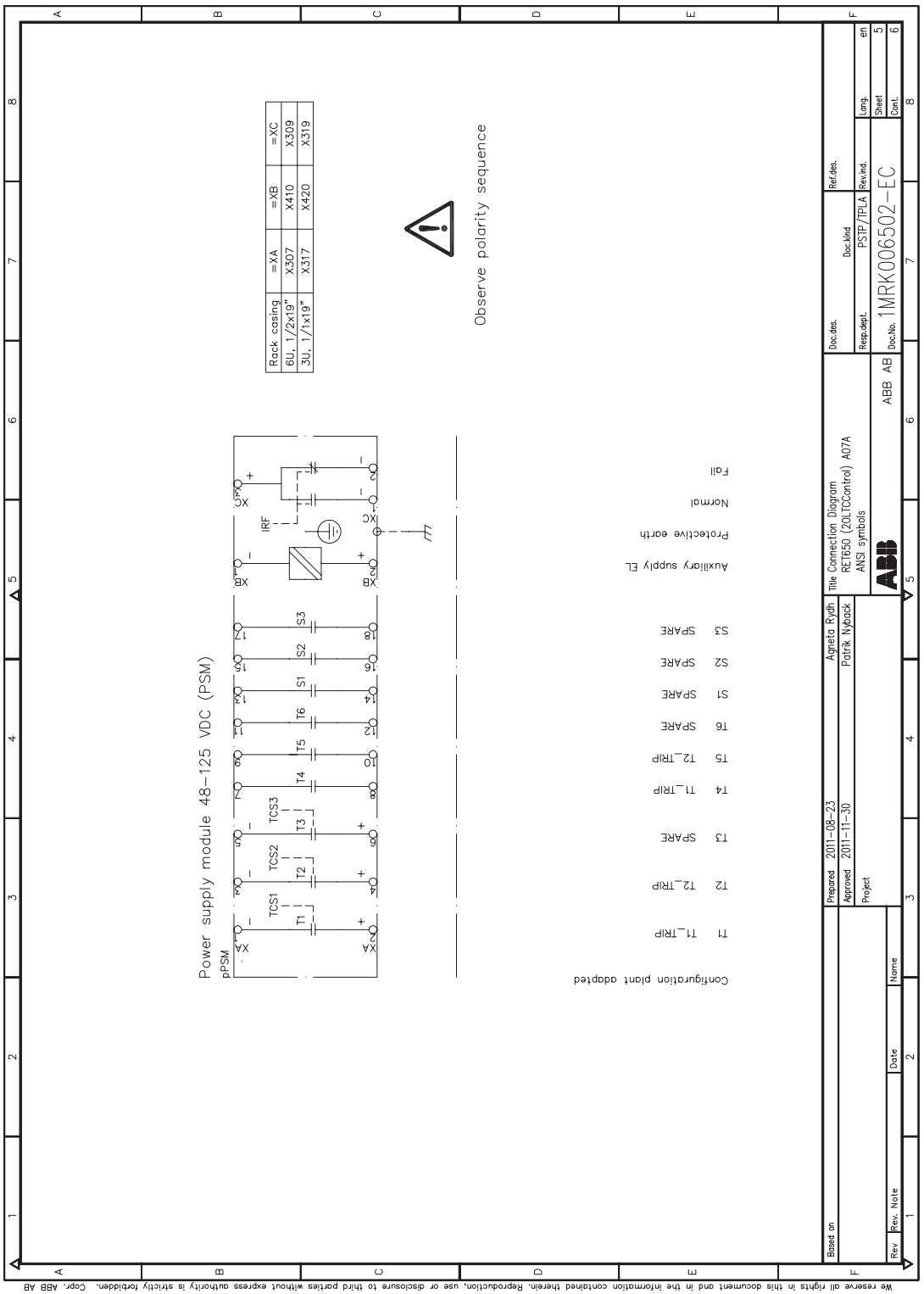

We reserve all rights in this document and in the information contained therein. Reproduction, use or disclosure to third parties without express authority is strictly forbidden. Copyr. ABB AB

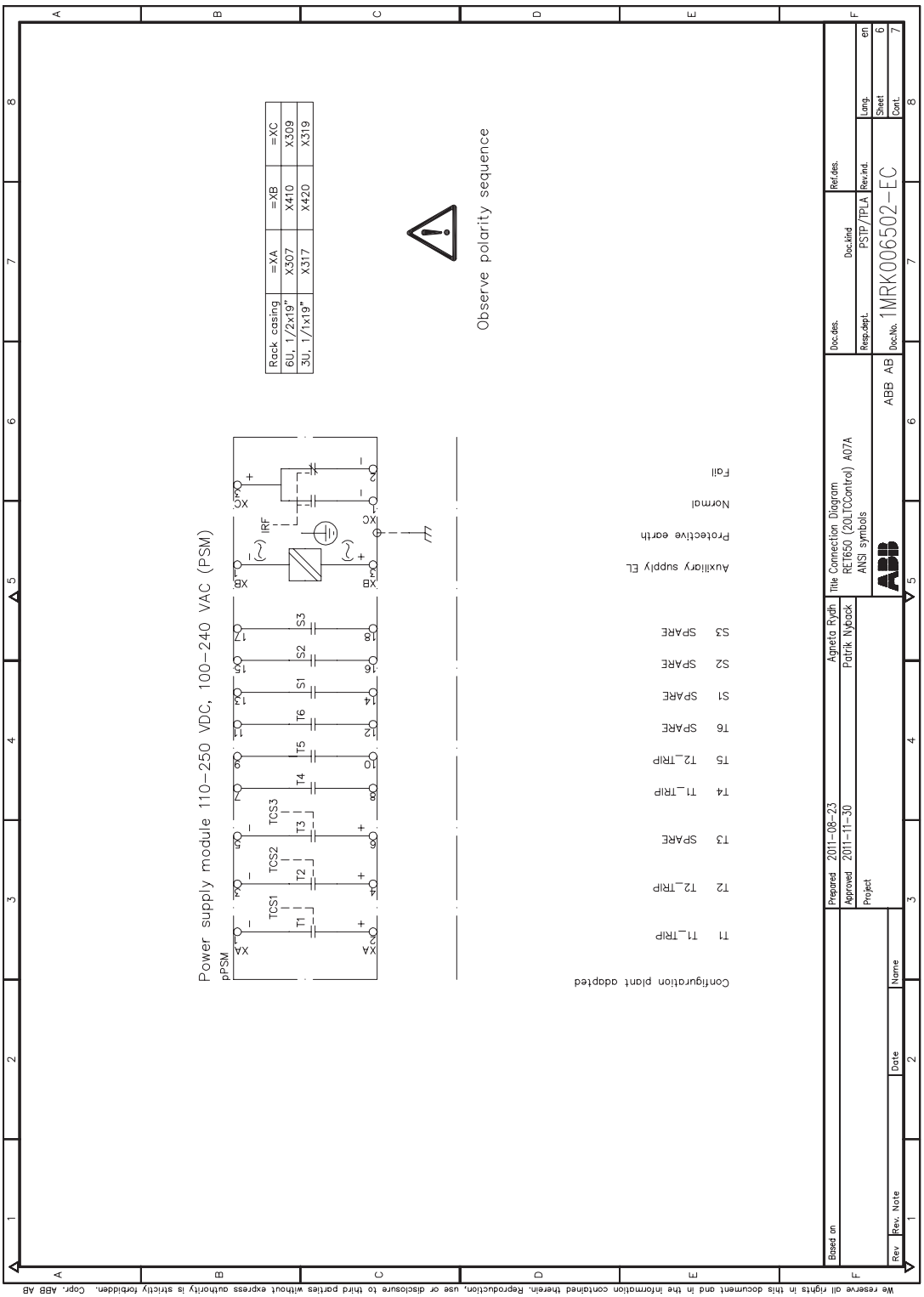
Power supply module 110–250 VDC, 100–240 VAC (PSM)
pPSM
Observe polarity sequence
Rack casing | =XA | =XB | =XC
6U, 1/2x19" | X307 | X410 | X309
3U, 1/1x19" | X317 | X420 | X319
Configuration plant dadpted
T1 T1_TRIP
T2 T2_TRIP
T3 SPARE
T4 T1_TRIP
T5 T2_TRIP
T6 SPARE
S1 SPARE
S2 SPARE
S3 SPARE
Auxiliary supply EL
Protective earth
Normal
Fail
Agneta Rydh
Patrik Nyback
Prepared 2011-08-23
Approved 2011-11-30
Project
Title Connection Diagram
RET650 (2O1.TCControl) A07A
ANSI symbols
ABB AB
Doc.No. 1MRK006502-EC
Doc.kind PSTP/TPLA
Lang. en
Sheet 6
Cont. 7
Based on
Rev Rev. Note Date Name
We reserve all rights in this document and in the information contained therein. Reproduction, use or disclosure to third parties without express authority is strictly forbidden. Copr. ABB AB

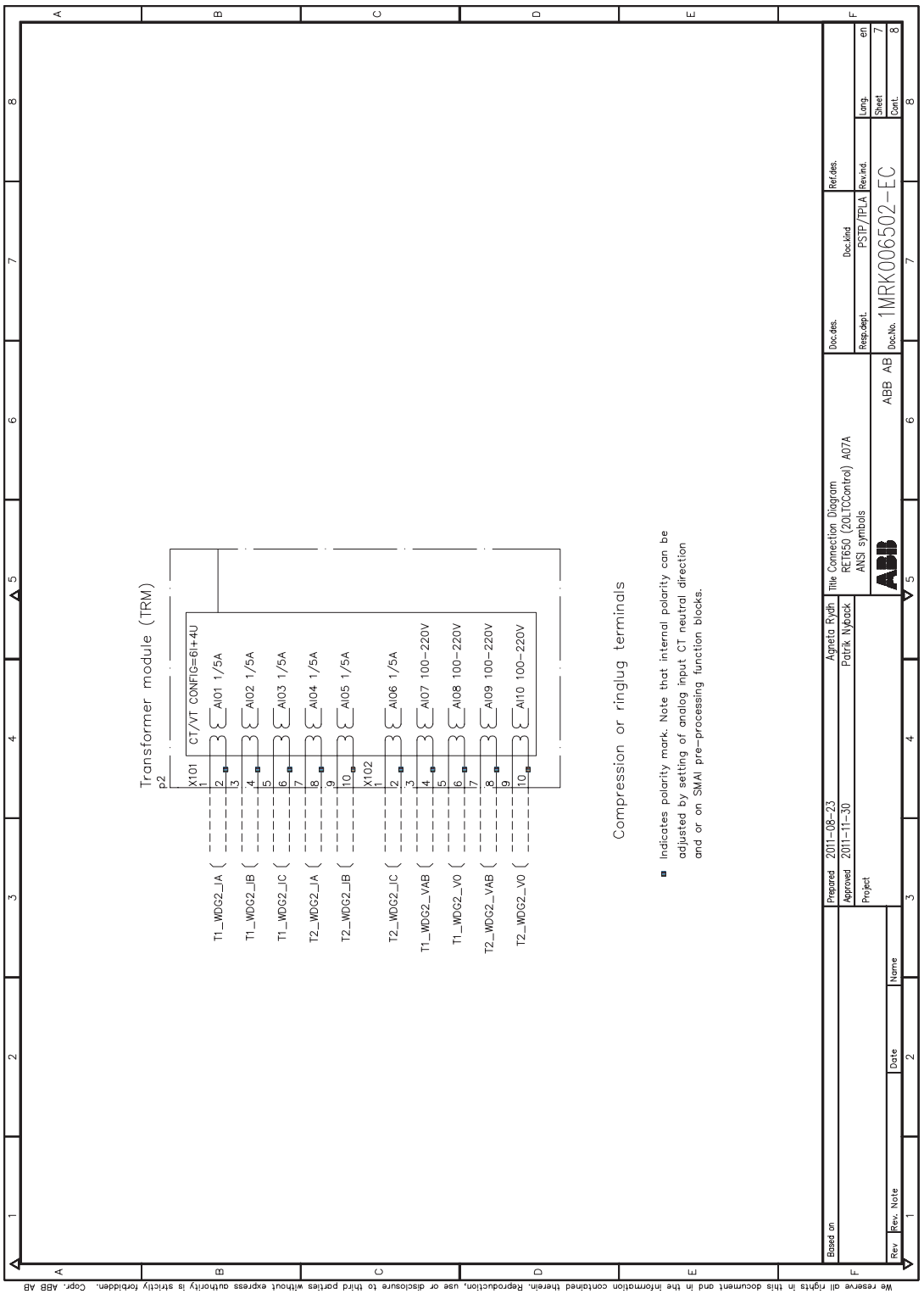
Transformer module (TRM)
p2
X101
CT/VT CONFIG=6I+4U
AI01 1/5A
AI02 1/5A
AI03 1/5A
AI04 1/5A
AI05 1/5A
X102
AI06 1/5A
AI07 100-220V
AI08 100-220V
AI09 100-220V
AI10 100-220V
T1_WDG2_IA
T1_WDG2_IB
T1_WDG2_IC
T2_WDG2_IA
T2_WDG2_IB
T2_WDG2_IC
T1_WDG2_VAB
T1_WDG2_V0
T2_WDG2_VAB
T2_WDG2_V0
Compression or ringlug terminals
Indicates polarity mark. Note that internal polarity can be adjusted by setting of analog input CT neutral direction and or on SMAI pre-processing function blocks.
Based on
Rev
Rev. Note
Date
Name
Prepared 2011-08-23 Agneta Rydh
Approved 2011-11-30 Patrik Nyback
Project
Title Connection Diagram
RET650 (20ITCControl) A07A
ANSI symbols
ABB AB
Doc.des.
Doc.kind PSTP/TPLA
Resp.dept.
Doc.No. 1MRK006502-EC
Ref.des.
Rev.ind.
Lang. en
Sheet 7
Cont. 8
We reserve all rights in this document and in the information contained therein. Reproduction, use or disclosure to third parties without express authority is strictly forbidden. Copyr. ABB AB

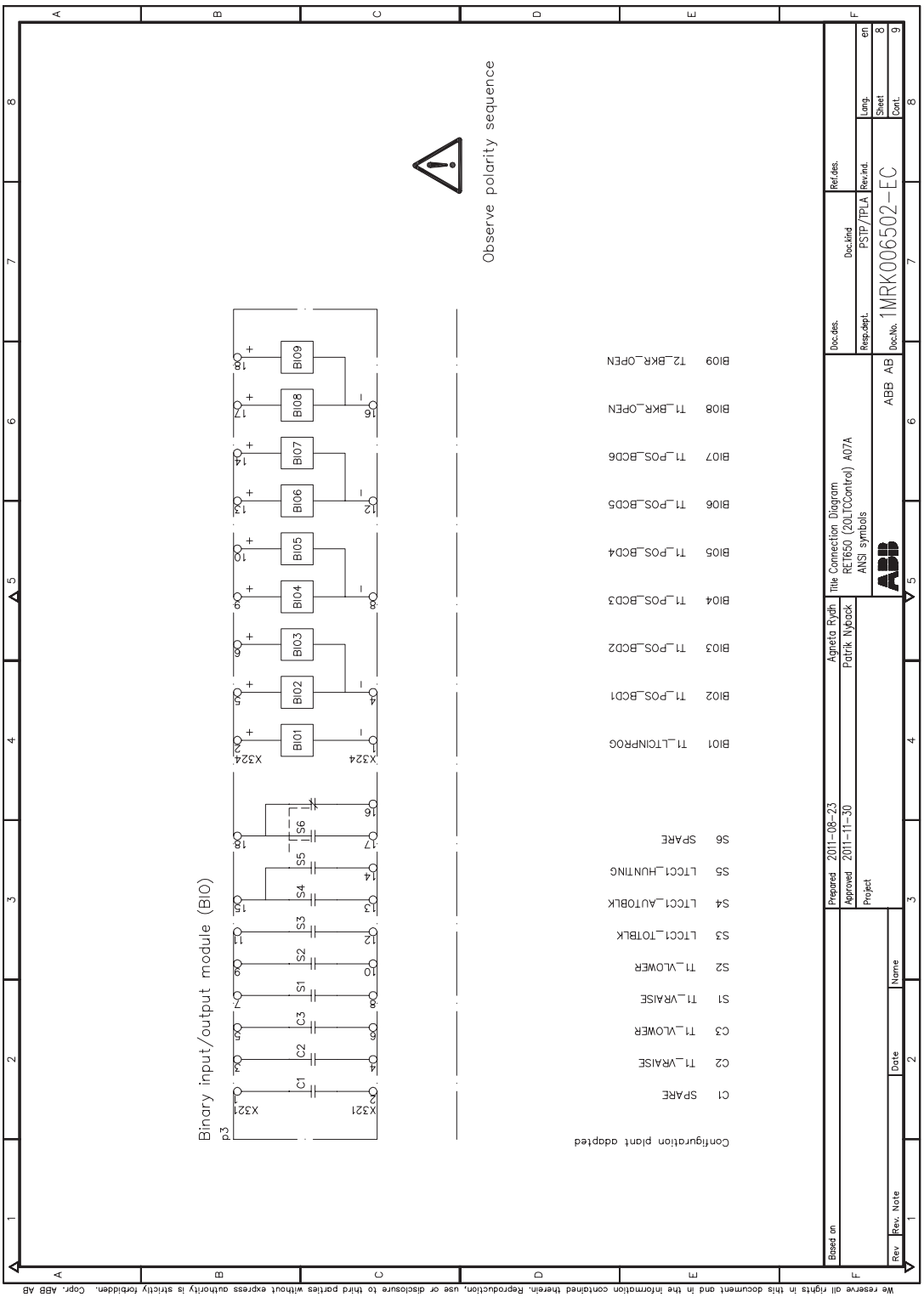
Observe polarity sequence
Binary input/output module (BIO)
p3
X321
X324
C1 SPARE
C2 T1_VRAISE
C3 T1_VLOWER
S1 T1_VRAISE
S2 T1_VLOWER
S3 LTCC1_TOTBLK
S4 LTCC1_AUTOBLK
S5 LTCC1_HUNTING
S6 SPARE
BI01 T1_LTCINPROG
BI02 T1_POS_BCD1
BI03 T1_POS_BCD2
BI04 T1_POS_BCD3
BI05 T1_POS_BCD4
BI06 T1_POS_BCD5
BI07 T1_POS_BCD6
BI08 T1_BKR_OPEN
BI09 T2_BKR_OPEN
Configuration plant adopted
Agneta Rydh
Patrik Nyback
Prepared 2011-08-23
Approved 2011-11-30
Project
Based on
Rev Rev. Note Date Name
Title Connection Diagram
RET650 (2OLTCControl) A07A
ANSI symbols
ABB AB
Doc.des.
Doc.No. 1MRK006502-EC
Doc.kind PSTP/TPLA
Resp.dept.
Ref.des.
Rev.ind.
Lang. en
Sheet 8
Cont. 9
We reserve all rights in this document and in the information contained therein. Reproduction, use or disclosure to third parties without express authority is strictly forbidden. Copr. ABB AB

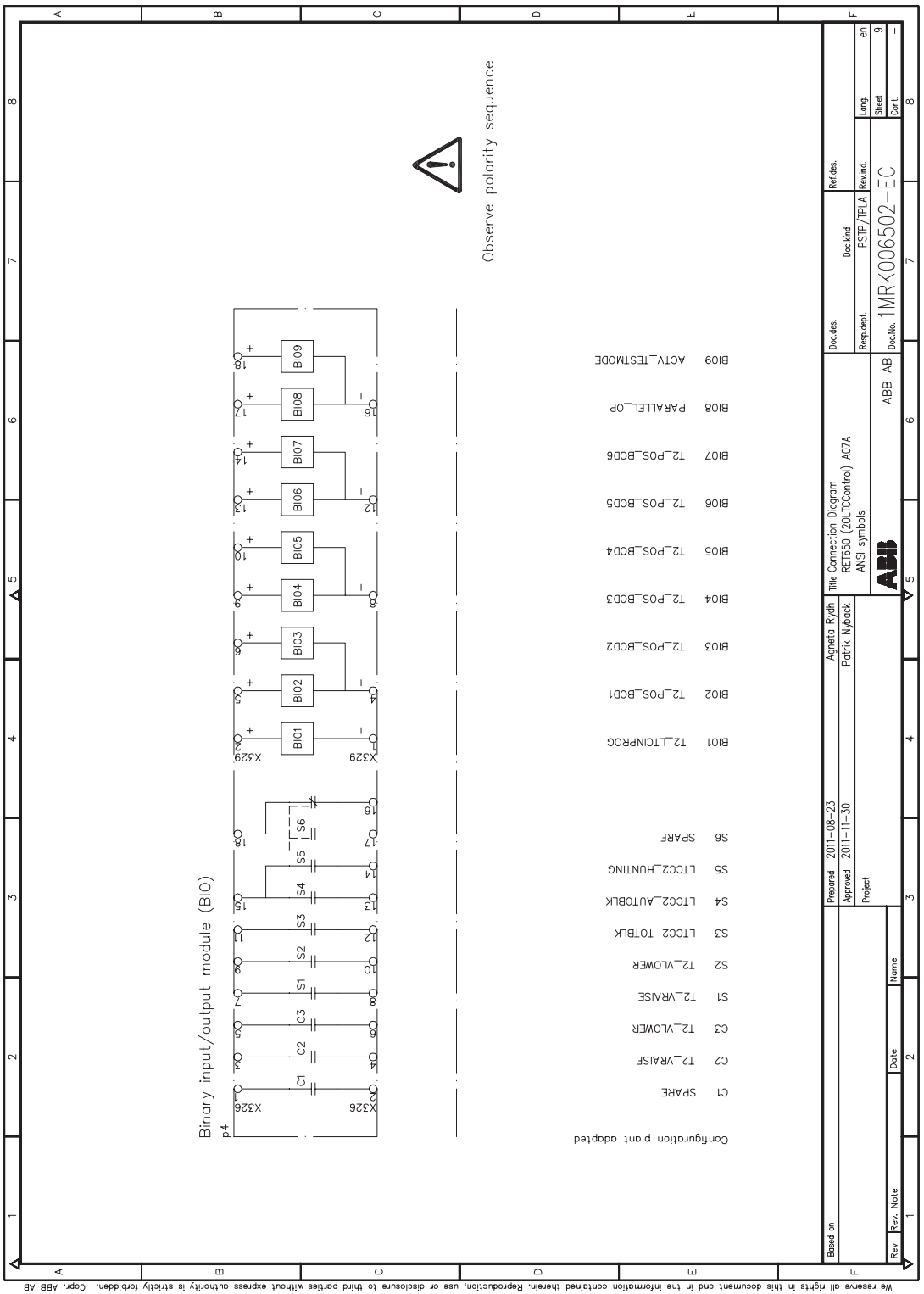
Observe polarity sequence
Binary input/output module (BIO)
p4
X326
X329
BIO1
BIO2
BIO3
BIO4
BIO5
BIO6
BIO7
BIO8
BIO9
C1
C2
C3
S1
S2
S3
S4
S5
S6
Configuration plant adapted
C1 SPARE
C2 T2_VRAISE
C3 T2_VLOWER
S1 T2_VRAISE
S2 T2_VLOWER
S3 LTCC2_TOTBLK
S4 LTCC2_AUTOBLK
S5 LTCC2_HUNTING
S6 SPARE
BIO1 T2_LTCINPROG
BIO2 T2_POS_BCD1
BIO3 T2_POS_BCD2
BIO4 T2_POS_BCD3
BIO5 T2_POS_BCD4
BIO6 T2_POS_BCD5
BIO7 T2_POS_BCD6
BIO8 PARALLEL_OP
BIO9 ACTV_TESTMODE
Prepared 2011-08-23
Approved 2011-11-30
Agneta Rydh
Patrik Nyback
Title Connection Diagram
RET650 (20LTCControl) A07A
ANSI symbols
ABB AB
Doc.No. 1MRK006502-EC
PSTP/TPLA
Sheet 9
We reserve all rights in this document and in the information contained therein. Reproduction, use or disclosure to third parties without express authority is strictly forbidden. Copr. ABB AB

Section 18 Technical data

18.1 Dimensions

Table 457: Dimensions of the IED - 3U full 19" rack

Description	Value
Width	17.40 inches (442 mm)
Height	5.20 inches (132 mm), 3U
Depth	9.82 inches (249.5 mm)
Weight box	<22.04 lbs (10 kg)
Weight LHMI	2.87 lbs (1.3 kg)

18.2 Power supply

Table 458: Power supply

Description	600PSM02	600PSM03
V_n	48, 60, 110, 125 V DC	100, 110, 120, 220, 240 V AC, 50 and 60 Hz
		110, 125, 220, 250 V DC
$V_n$variation	80...120% of V_n (38.4...150 V DC)	85...110% of V_n (85...264 V AC)
		80...120% of V_n (88...300 V DC)
Maximum load of auxiliary voltage supply	35 W for DC 40 W for AC	
Ripple in the DC auxiliary voltage	Max 15% of the DC value (at frequency of 100 and 120 Hz)	
Maximum interruption time in the auxiliary DC voltage without resetting the IED	50 ms at V_n	

18.3 Energizing inputs

Table 459: Energizing inputs

Description		Value	
Rated frequency		50/60 Hz	
Operating range		Rated frequency ± 5 Hz	
Current inputs	Rated current, I_n	0.1/0.5 A[1)]	1/5 A[2)]
	Thermal withstand capability: • Continuously • For 1 s • For 10 s	 4 A 100 A 20 A	 20 A 500 A *) 100 A
	Dynamic current withstand: • Half-wave value	 250 A	 1250 A
	Input impedance	<100 mΩ	<20 mΩ
Voltage inputs	Rated voltage, V_n	100 V AC/ 110 V AC/ 115 V AC/ 120 V AC	
	Voltage withstand: • Continuous • For 10 s	 420 V rms 450 V rms	
	Burden at rated voltage	<0.05 VA	
*) max. 350 A for 1 s when COMBITEST test switch is included.			

1) Residual current
2) Phase currents or residual current

18.4 Binary inputs

Table 460: Binary inputs

Description	Value
Operating range	Maximum input voltage 300 V DC
Rated voltage	24...250 V DC
Current drain	1.6...1.8 mA
Power consumption/input	<0.38 W
Threshold voltage	15...221 V DC (parametrizable in the range in steps of 1% of the rated voltage)

18.5 Signal outputs

Table 461: Signal output and IRF output

Description	Value
Rated voltage	250 V AC/DC
Continuous contact carry	5 A
Make and carry for 3.0 s	10 A
Make and carry 0.5 s	30 A
Breaking capacity when the control-circuit time constant L/R<40 ms, at V< 48/110/220 V DC	≤0.5 A/≤0.1 A/≤0.04 A

18.6 Power outputs

Table 462: Power output relays without TCM function

Description	Value
Rated voltage	250 V AC/DC
Continuous contact carry	8 A
Make and carry for 3.0 s	15 A
Make and carry for 0.5 s	30 A
Breaking capacity when the control-circuit time constant L/R<40 ms, at V< 48/110/220 V DC	≤1 A/≤0.3 A/≤0.1 A

Table 463: Power output relays with TCM function

Description	Value
Rated voltage	250 V DC
Continuous contact carry	8 A
Make and carry for 3.0 s	15 A
Make and carry for 0.5 s	30 A
Breaking capacity when the control-circuit time constant L/R<40 ms, at V< 48/110/220 V DC	≤1 A/≤0.3 A/≤0.1 A
Control voltage range	20...250 V DC
Current drain through the monitoring circuit	~1.0 mA
Minimum voltage over the TCS contact	20 V DC

18.7 Data communication interfaces

Table 464: Ethernet interfaces

Ethernet interface	Protocol	Cable	Data transfer rate
100BASE-TX	-	CAT 6 S/FTP or better	100 MBits/s
100BASE-FX	TCP/IP protocol	Fibre-optic cable with LC connector	100 MBits/s

Table 465: Fibre-optic communication link

Wave length	Fibre type	Connector	Permitted path attenuation[1)]	Distance
1300 nm	MM 62.5/125 µm glass fibre core	LC	<8 dB	2 km

1) Maximum allowed attenuation caused by connectors and cable together

Table 466: X8/IRIG-B and EIA-485 interface

Type	Protocol	Cable
Screw terminal, pin row header	IRIG-B	Shielded twisted pair cable Recommended: CAT 5, Belden RS-485 (9841-9844) or Alpha Wire (Alpha 6222-6230)
Screw terminal, pin row header		Shielded twisted pair cable Recommended: DESCAFLEX RD-H(ST)H-2x2x0.22mm^2, Belden 9729, Belden 9829

Table 467: IRIG-B

Type	Value	Accuracy
Input impedance	430 Ohm	—
Minimum input voltage HIGH	4.3 V	—
Maximum input voltage LOW	0.8 V	—

Table 468: EIA-485 interface

Type	Value	Conditions
Minimum differential driver output voltage	1.5 V	—
Maximum output current	60 mA	—
Minimum differential receiver input voltage	0.2 V	—
Supported bit rates	300, 600, 1200, 2400, 4800, 9600, 19200, 38400, 57600, 115200	—
Maximum number of 650 IEDs supported on the same bus	32	—
Max. cable length	925 m (3000 ft)	Cable: AWG24 or better, stub lines shall be avoided

Table 469: Serial rear interface

Type	Counter connector
Serial port (X9)	Optical serial port, type ST for IEC 60870-5-103 and DNP serial

Table 470: Optical serial port (X9)

Wave length	Fibre type	Connector	Permitted path attenuation[1)]
820 nm	MM 62,5/125 µm glass fibre core	ST	6.8 dB (approx. 1700m length with 4 db / km fibre attenuation)
820 nm	MM 50/125 µm glass fibre core	ST	2.4 dB (approx. 600m length with 4 db / km fibre attenuation)

1) Maximum allowed attenuation caused by fibre

18.8 Enclosure class

Table 471: Degree of protection of rack-mounted IED

Description	Value
Front side	IP 40
Rear side, connection terminals	IP 20

Table 472: Degree of protection of the LHMI

Description	Value
Front and side	IP40

18.9 Environmental conditions and tests

Table 473: Environmental conditions

Description	Value
Operating temperature range	-25...+55ºC (continuous)
Short-time service temperature range	-40...+70ºC (<16h) Note: Degradation in MTBF and HMI performance outside the temperature range of -25...+55ºC
Relative humidity	<93%, non-condensing
Atmospheric pressure	12.47...15.37 psi (86...106 kPa)
Altitude	up to 6561.66 feet (2000 m)
Transport and storage temperature range	-40...+85ºC

Table 474: Environmental tests

Description		Type test value	Reference
Cold tests	operation	96 h at -25ºC 16 h at -40ºC	IEC 60068-2-1/ANSI C37.90-2005 (chapter 4)
	storage	96 h at -40ºC	
Dry heat tests	operation	16 h at +70ºC	IEC 60068-2-2/ANSI C37.90-2005 (chapter 4)
	storage	96 h at +85ºC	
Damp heat tests	steady state	240 h at +40ºC humidity 93%	IEC 60068-2-78
	cyclic	6 cycles at +25 to +55ºC humidity 93...95%	IEC 60068-2-30

Section 19 IED and functionality tests

19.1 Electromagnetic compatibility tests

Table 475: Electromagnetic compatibility tests

Description	Type test value	Reference
100 kHz and 1 MHz burst disturbance test		IEC 61000-4-18, level 3 IEC 60255-22-1 ANSI C37.90.1-2002
• Common mode	2.5 kV	
• Differential mode	2.5 kV	
Electrostatic discharge test		IEC 61000-4-2, level 4 IEC 60255-22-2 ANSI C37.90.3-2001
• Contact discharge	8 kV	
• Air discharge	15 kV	
Radio frequency interference tests		
• Conducted, common mode	10 V (emf), f=150 kHz...80 MHz	IEC 61000-4-6 , level 3 IEC 60255-22-6
• Radiated, amplitude-modulated	20 V/m (rms), f=80...1000 MHz and f=1.4...2.7 GHz	IEC 61000-4-3, level 3 IEC 60255-22-3 ANSI C37.90.2-2004
Fast transient disturbance tests		IEC 61000-4-4 IEC 60255-22-4, class A ANSI C37.90.1-2002
• Communication ports	4 kV	
• Other ports	4 kV	
Surge immunity test		IEC 61000-4-5, level 3/2 IEC 60255-22-5
• Communication	1 kV line-to-ground	
• Other ports	2 kV line-to-ground, 1 kV line-to-line	
Power frequency (50 Hz) magnetic field		IEC 61000-4-8, level 5

Table continues on next page

Description	Type test value	Reference
• 3 s • Continuous	1000 A/m 100 A/m	
Pulse magnetic field immunity test	1000A/m	IEC 61000–4–9, level 5
Power frequency immunity test • Common mode • Differential mode	 300 V rms 150 V rms	IEC 60255-22-7, class A IEC 61000-4-16
Voltage dips and short interruptionsc on DC power supply	Dips: 40%/200 ms 70%/500 ms Interruptions: 0-50 ms: No restart 0...∞ s : Correct behaviour at power down	IEC 60255-11 IEC 61000-4-11
Voltage dips and interruptions on AC power supply	Dips: 40% 10/12 cycles at 50/60 Hz 70% 25/30 cycles at 50/60 Hz Interruptions: 0–50 ms: No restart 0...∞ s: Correct behaviour at power down	IEC 60255–11 IEC 61000–4–11
Electromagnetic emission tests • Conducted, RF-emission (mains terminal) 0.15...0.50 MHz 0.5...30 MHz • Radiated RF-emission 30...230 MHz 230...1000 MHz	 < 79 dB(µV) quasi peak < 66 dB(µV) average < 73 dB(µV) quasi peak < 60 dB(µV) average < 40 dB(µV/m) quasi peak, measured at 10 m distance < 47 dB(µV/m) quasi peak, measured at 10 m distance	EN 55011, class A IEC 60255-25

19.2 Insulation tests

Table 476: Insulation tests

Description	Type test value	Reference
Dielectric tests: • Test voltage	2 kV, 50 Hz, 1 min 1 kV, 50 Hz, 1 min, communication	IEC 60255-5 ANSI C37.90-2005
Impulse voltage test: • Test voltage	5 kV, unipolar impulses, waveform 1.2/50 µs, source energy 0.5 J 1 kV, unipolar impulses, waveform 1.2/50 µs, source energy 0.5 J, communication	IEC 60255-5 ANSI C37.90-2005
Insulation resistance measurements • Isolation resistance	>100 MΩ, 500 V DC	IEC 60255-5 ANSI C37.90-2005
Protective bonding resistance • Resistance	<0.1 Ώ (60 s)	IEC 60255-27

19.3 Mechanical tests

Table 477: Mechanical tests

Description	Reference	Requirement
Vibration response tests (sinusoidal)	IEC 60255-21-1	Class 2
Vibration endurance test	IEC60255-21-1	Class 1
Shock response test	IEC 60255-21-2	Class 1
Shock withstand test	IEC 60255-21-2	Class 1
Bump test	IEC 60255-21-2	Class 1
Seismic test	IEC 60255-21-3	Class 2

19.4 Product safety

Table 478: Product safety

Description	Reference
LV directive	2006/95/EC
Standard	EN 60255-27 (2005)

19.5 EMC compliance

Table 479: EMC compliance

Description	Reference
EMC directive	2004/108/EC
Standard	EN 50263 (2000) EN 60255-26 (2007)

Section 20 Time inverse characteristics

20.1 Application

In order to assure time selectivity between different overcurrent protections in different points in the network different time delays for the different relays are normally used. The simplest way to do this is to use definite time delay. In more sophisticated applications current dependent time characteristics are used. Both alternatives are shown in a simple application with three overcurrent protections connected in series.

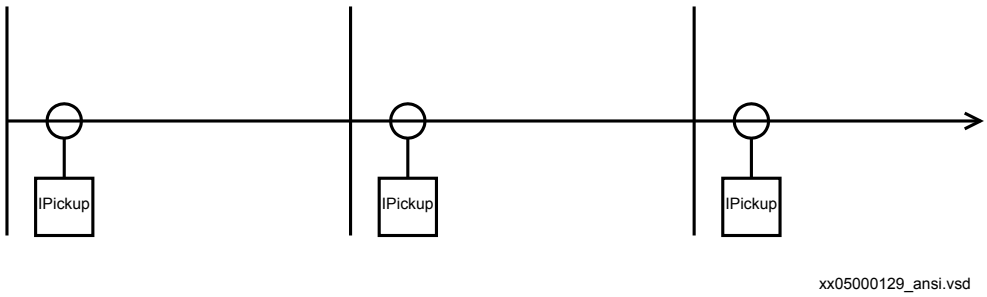

Figure 207: Three overcurrent protections connected in series

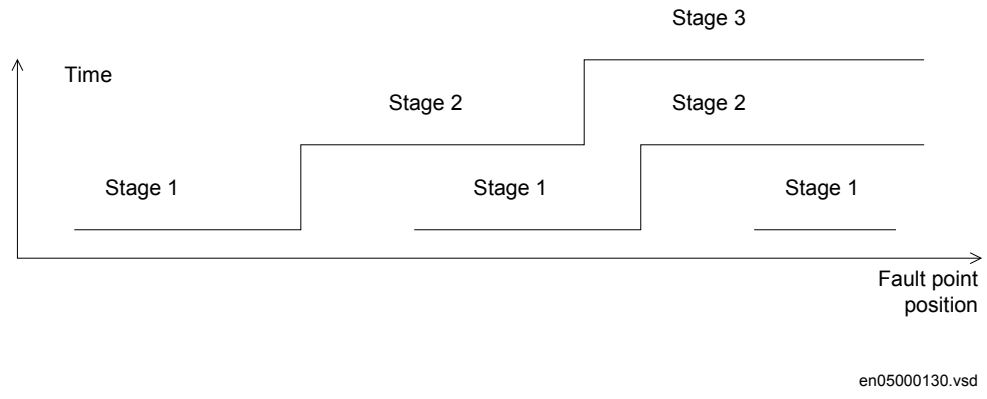

Figure 208: Definite time overcurrent characteristics

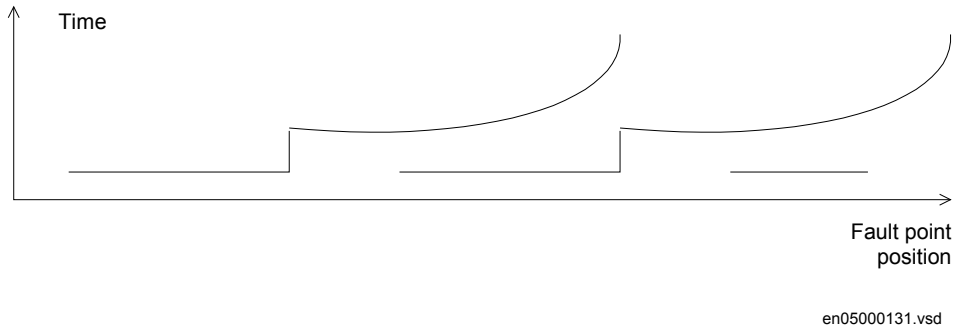

Figure 209: Inverse time overcurrent characteristics with inst. function

The inverse time characteristic makes it possible to minimize the fault clearance time and still assure the selectivity between protections.

To assure selectivity between protections there must be a time margin between the operation time of the protections. This required time margin is dependent of following factors, in a simple case with two protections in series:

- Difference between pick-up time of the protections to be co-ordinated
- Opening time of the breaker closest to the studied fault
- Reset time of the protection
- Margin dependent of the time-delay inaccuracy of the protections

Assume we have the following network case.

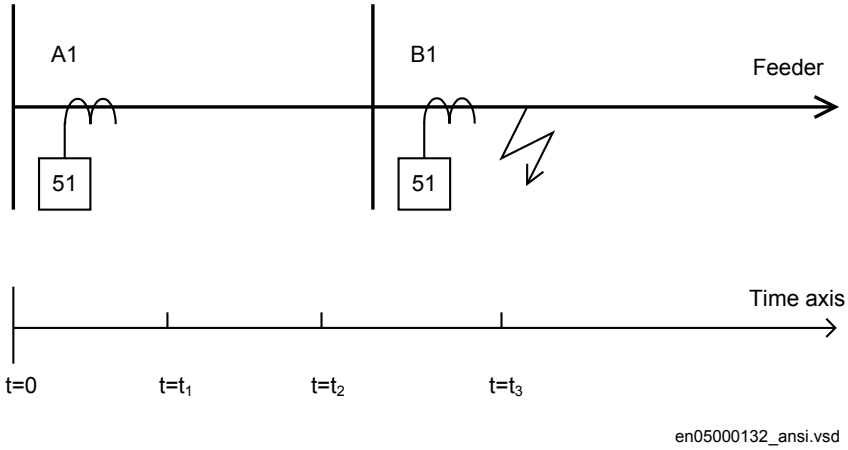

Figure 210: Selectivity steps for a fault on feeder B1

where:

t=0	is The fault occurs
$t=t_1$	is Protection B1 trips
$t=t_2$	is Breaker at B1 opens
$t=t_3$	is Protection A1 resets

In the case protection B1 shall operate without any intentional delay (instantaneous). When the fault occurs the protections pickup to detect the fault current. After the time t_1 the protection B1 send a trip signal to the circuit breaker. The protection A1 starts its delay timer at the same time, with some deviation in time due to differences between the two protections. There is a possibility that A1 will start before the trip is sent to the B1 circuit breaker.

At the time t_2 the circuit breaker B1 has opened its primary contacts and thus the fault current is interrupted. The breaker time (t2 - t1) can differ between different faults. The maximum opening time can be given from manuals and test protocols. Still at t_2 the timer of protection A1 is active.

At time t_3 the protection A1 is reset, i.e. the timer is stopped.

In most applications it is required that the delay times shall reset as fast as possible when the current fed to the protection drops below the set current level, the reset time shall be minimized. In some applications it is however beneficial to have some type of delayed reset time of the overcurrent function. This can be the case in the following applications:

- If there is a risk of intermittent faults. If the current relay, close to the faults, picks up and resets there is a risk of unselective trip from other protections in the system.
- Delayed resetting could give accelerated fault clearance in case of automatic reclosing to a permanent fault.
- Overcurrent protection functions are sometimes used as release criterion for other protection functions. It can often be valuable to have a reset delay to assure the release function.

20.2 Operation principle

20.2.1 Mode of operation

The function can operate in a definite time-lag mode or in a current definite inverse time mode. For the inverse time characteristic both ANSI and IEC based standard curves are available.

If current in any phase exceeds the set pickup current value , a timer, according to the selected operating mode, is started. The component always uses the maximum of the three phase current values as the current level used in timing calculations.

In case of definite time-lag mode the timer will run constantly until the time is reached or until the current drops below the reset value (pickup value minus the hysteresis) and the reset time has elapsed.

The general expression for inverse time curves is according to equation 108.

$$t[s] = \left(\frac{A}{\left(\frac{i}{Pickupn} \right)^{P} - C} + B \right) \cdot td$$

(Equation 108)

where:

p, A, B, C	are constants defined for each curve type,
Pickupn	is the set pickup current for step n,
td	is set time multiplier for step n and
i	is the measured current.

For inverse time characteristics a time will be initiated when the current reaches the set pickup level. From the general expression of the characteristic the following can be seen:

$$\left(t_{op} - B \cdot td\right) \cdot \left(\left(\frac{i}{Pickupn}\right)^{P} - C\right) = A \cdot td$$

(Equation 109)

where:

t_{op} is the operating time of the protection

The time elapsed to the moment of trip is reached when the integral fulfils according to equation 110, in addition to the constant time delay:

$$\int_{0}^{t}\left(\left(\frac{i}{Pickupn}\right)^{P} - C\right) \cdot dt \geq A \cdot td$$

(Equation 110)

For the numerical protection the sum below must fulfil the equation for trip.

$$\Delta t \cdot \sum_{j=1}^{n}\left(\left(\frac{i(j)}{Pickupn}\right)^{P} - C\right) \geq A \cdot td$$

(Equation 111)

where:

j = 1	is the first protection execution cycle when a fault has been detected, that is, when $\frac{i}{Pickupn} > 1$
Δt	is the time interval between two consecutive executions of the protection algorithm,
n	is the number of the execution of the algorithm when the trip time equation is fulfilled, that is, when a trip is given and
i (j)	is the fault current at time j

For inverse time operation, the inverse time characteristic is selectable. Both the IEC and ANSI/IEEE standardized inverse time characteristics are supported.

For the IEC curves there is also a setting of the minimum time-lag of operation, see figure 211.

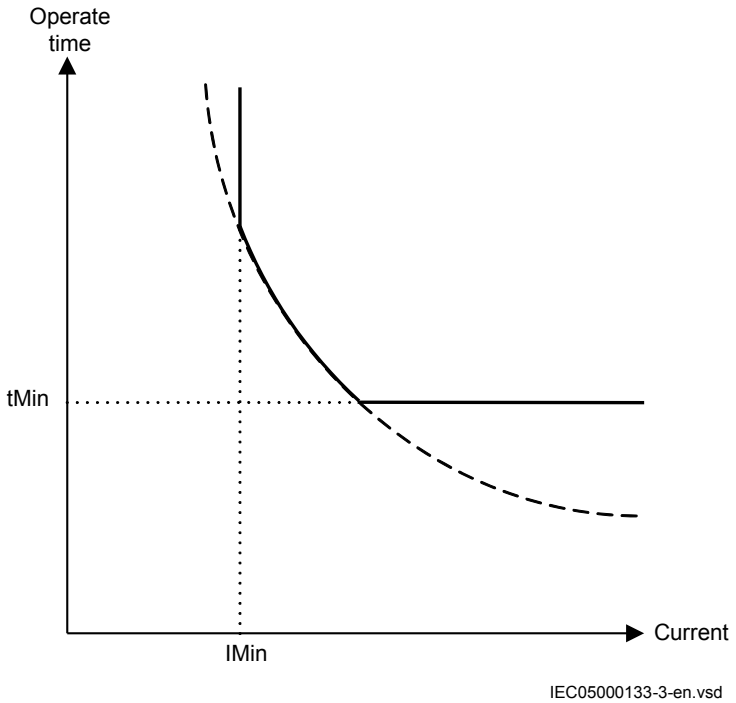

Figure 211: Minimum time-lag operation for the IEC curves

In order to fully comply with IEC curves definition setting parameter tMin shall be set to the value which is equal to the operating time of the selected IEC inverse time curve for measured current of twenty times the set current pickup value. Note that the operating time value is dependent on the selected setting value for time multiplier k.

In addition to the ANSI and IEC standardized characteristics, there are also two additional inverse curves available; the RI curve and the RD curve.

The RI inverse time curve emulates the characteristic of the electromechanical ASEA relay RI. The curve is described by equation 113:

$$t[s] = \left(\frac{td}{0.339 - 0.235 \cdot \frac{Pickupn}{i}} \right)$$

(Equation 113)

where:

Pickupn	is the set pickup current for step n
td	is set time multiplier for step n
i	is the measured current

The RD inverse curve gives a logarithmic delay, as used in the Combiflex protection RXIDG. The curve enables a high degree of selectivity required for sensitive residual ground-fault current protection, with ability to detect high-resistive ground faults. The curve is described by equation 114:

$$t[s] = 5.8 - 1.35 \cdot \ln\left(\frac{i}{td \cdot Pickupn} \right)$$

(Equation 114)

where:

Pickupn	is the set pickup current for step n,
td	is set time multiplier for step n and
i	is the measured current

The timer will be reset directly when the current drops below the set pickup current level minus the hysteresis.

20.3 Inverse time characteristics

When inverse time overcurrent characteristic is selected, the operate time of the stage will be the sum of the inverse time delay and the set definite time delay. Thus, if only the inverse time delay is required, it is of utmost importance to set the definite time delay for that stage to zero.

Table 480: ANSI Inverse time characteristics

Function	Range or value	Accuracy
Operating characteristic: $t = \left(\frac{A}{\left(I^{P} - 1 \right)} + B \right) \cdot td$ $I = I_{measured}/I_{set}$	td = (0.05-999) in steps of 0.01	-
ANSI Extremely Inverse	A=28.2, B=0.1217, P=2.0	
ANSI Very inverse	A=19.61, B=0.491, P=2.0	
ANSI Normal Inverse	A=0.0086, B=0.0185, P=0.02, tr=0.46	
ANSI Moderately Inverse	A=0.0515, B=0.1140, P=0.02	
ANSI Long Time Extremely Inverse	A=64.07, B=0.250, P=2.0	
ANSI Long Time Very Inverse	A=28.55, B=0.712, P=2.0	
ANSI Long Time Inverse	A=0.086, B=0.185, P=0.02	

Table 481: IEC Inverse time characteristics

Function	Range or value	Accuracy
Operating characteristic: $t = \left(\frac{A}{\left(I^{P} - 1 \right)} \right) \cdot td$ $I = I_{measured}/I_{set}$	td = (0.05-999) in steps of 0.01	-
IEC Normal Inverse	A=0.14, P=0.02	
IEC Very inverse	A=13.5, P=1.0	
IEC Inverse	A=0.14, P=0.02	
IEC Extremely inverse	A=80.0, P=2.0	
IEC Short time inverse	A=0.05, P=0.04	
IEC Long time inverse	A=120, P=1.0	

Table 482: RI and RD type inverse time characteristics

Function	Range or value	Accuracy
RI type inverse characteristic $t = \frac{1}{0.339 - \frac{0.236}{I}} \cdot td$ $I = I_{measured}/I_{set}$	td = (0.05-999) in steps of 0.01	
RD type logarithmic inverse characteristic $t = 5.8 - \left(1.35 \cdot ln\frac{I}{td}\right)$ $I = I_{measured}/I_{set}$	td = (0.05-999) in steps of 0.01	

Table 483: Inverse time characteristics for overvoltage protection

Function	Range or value	Accuracy
Type A curve: $t = \frac{td}{\left(\frac{V - VPickup}{VPickup}\right)}$ $V = V_{measured}$	td = (0.05-1.10) in steps of 0.01	±5% +60 ms
Type B curve: $t = \frac{td \cdot 480}{\left(32 \cdot \frac{V - VPickup}{VPickup} - 0.5\right)^{2.0} - 0.035}$	td = (0.05-1.10) in steps of 0.01	
Type C curve: $t = \frac{td \cdot 480}{\left(32 \cdot \frac{V - VPickup}{VPickup} - 0.5\right)^{3.0} - 0.035}$	td = (0.05-1.10) in steps of 0.01	

Table 484: Inverse time characteristics for undervoltage protection

Function	Range or value	Accuracy
Type A curve: $t = \frac{td}{\left(\frac{VPickup - V}{VPickup}\right)}$ V = $V_{measured}$	td = (0.05-1.10) in steps of 0.01	±5% +60 ms
Type B curve: $t = \frac{td \cdot 480}{\left(32 \cdot \frac{VPickup - V}{VPickup} - 0.5\right)^{2.0}} + 0.055$ V = $V_{measured}$	td = (0.05-1.10) in steps of 0.01	

Table 485: Inverse time characteristics for residual overvoltage protection

Function	Range or value	Accuracy
Type A curve: $t = \frac{td}{\left(\frac{V - VPickup}{VPickup}\right)}$ V = $V_{measured}$	td = (0.05-1.10) in steps of 0.01	±5% +70 ms
Type B curve: $t = \frac{td \cdot 480}{\left(32 \cdot \frac{V - VPickup}{VPickup} - 0.5\right)^{2.0}} - 0.035$	td = (0.05-1.10) in steps of 0.01	
Type C curve: $t = \frac{td \cdot 480}{\left(32 \cdot \frac{V - VPickup}{VPickup} - 0.5\right)^{3.0}} - 0.035$	td = (0.05-1.10) in steps of 0.01	

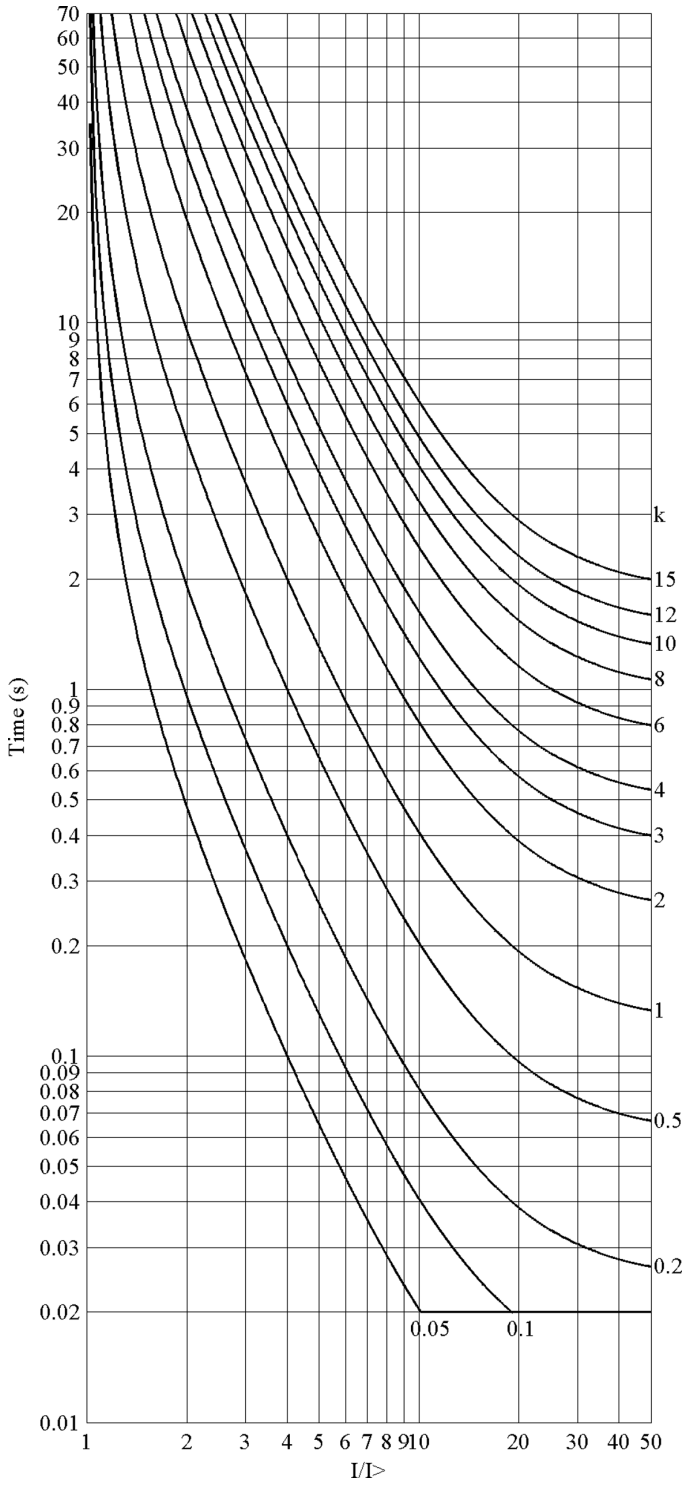

Figure 212: ANSI Extremely inverse time characteristics

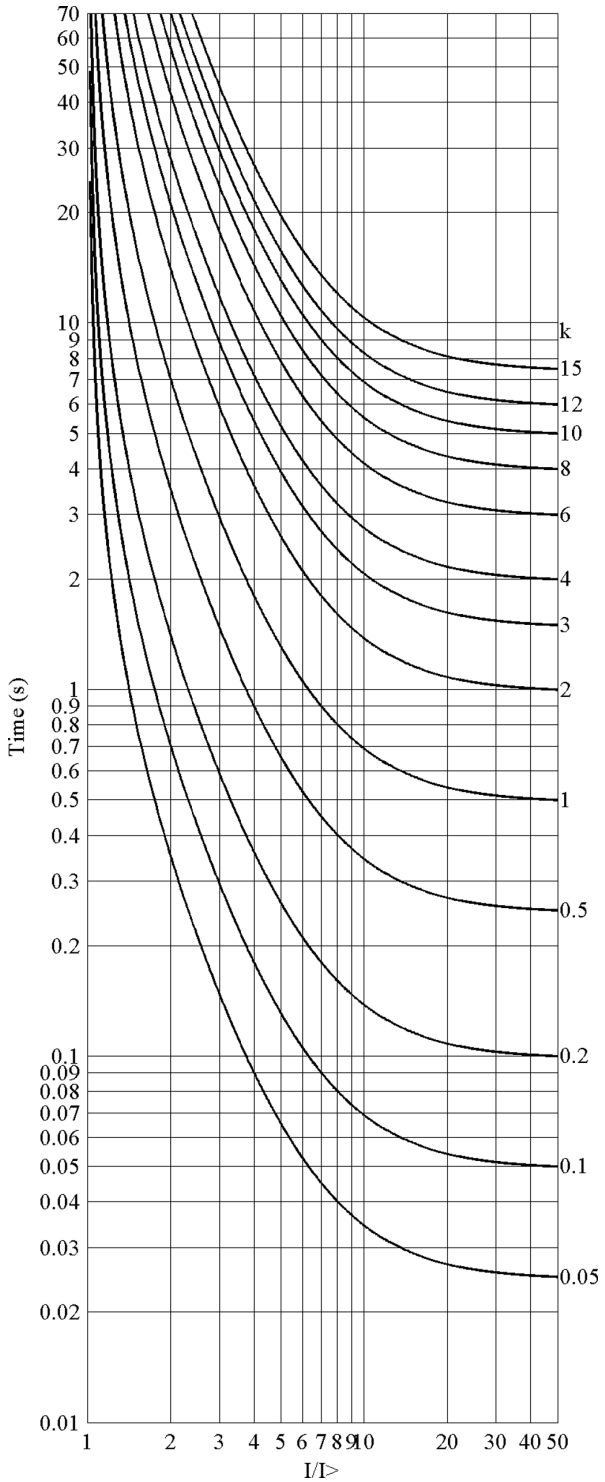

Figure 213: ANSI Very inverse time characteristics

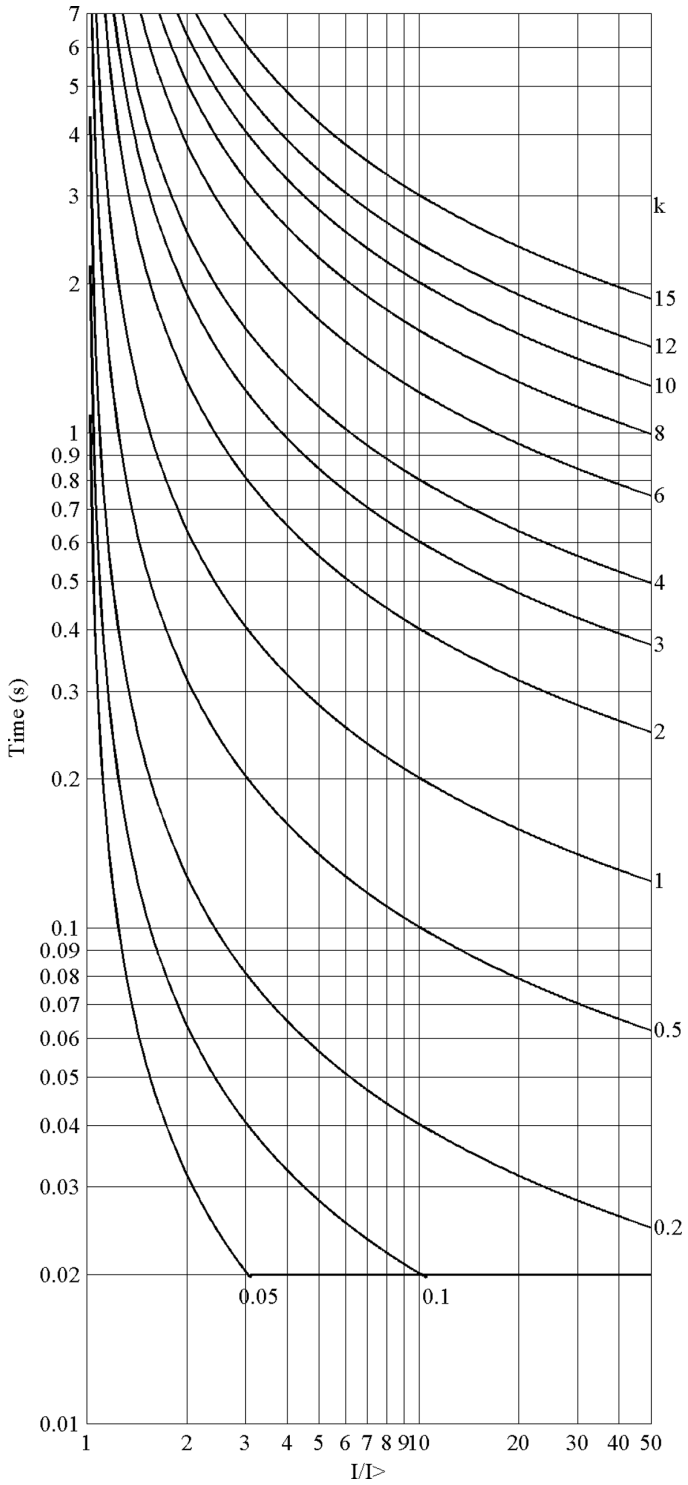

Figure 214: ANSI Normal inverse time characteristics

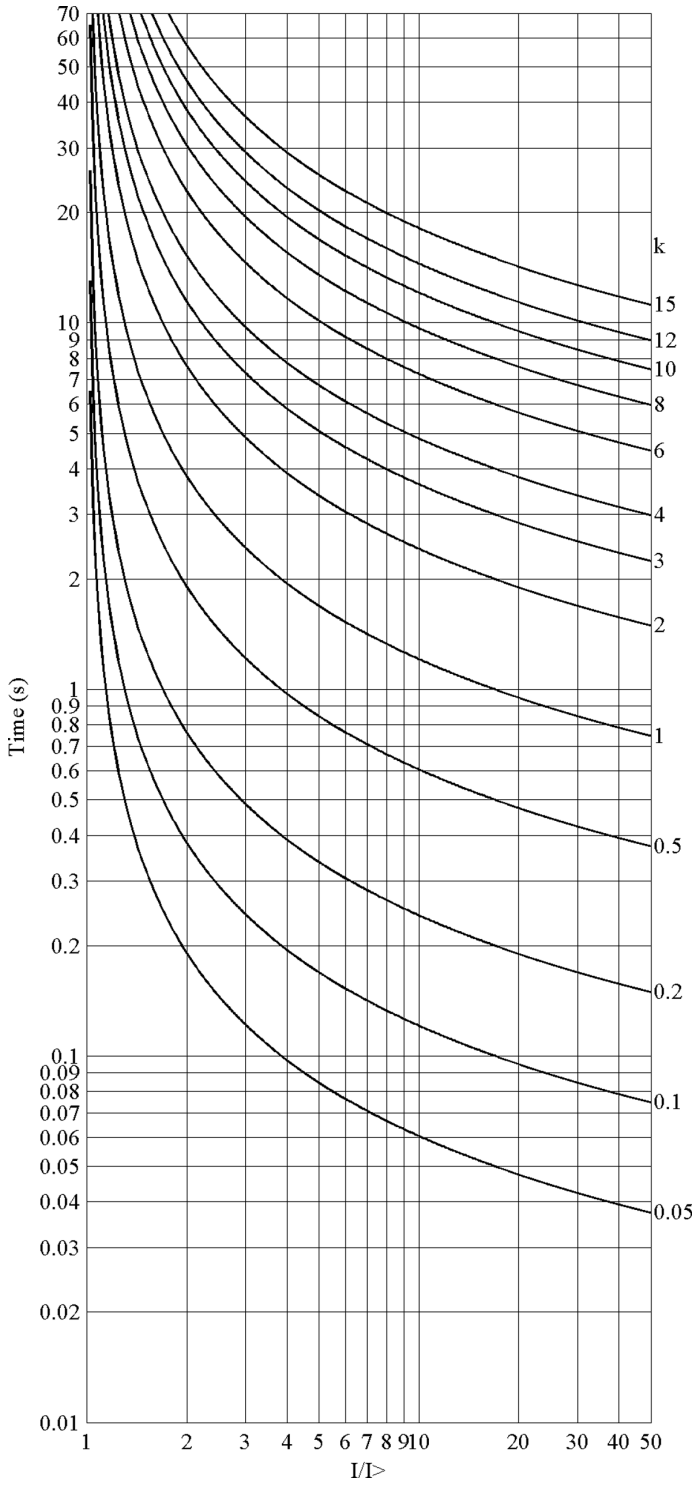

Figure 215: ANSI Moderately inverse time characteristics

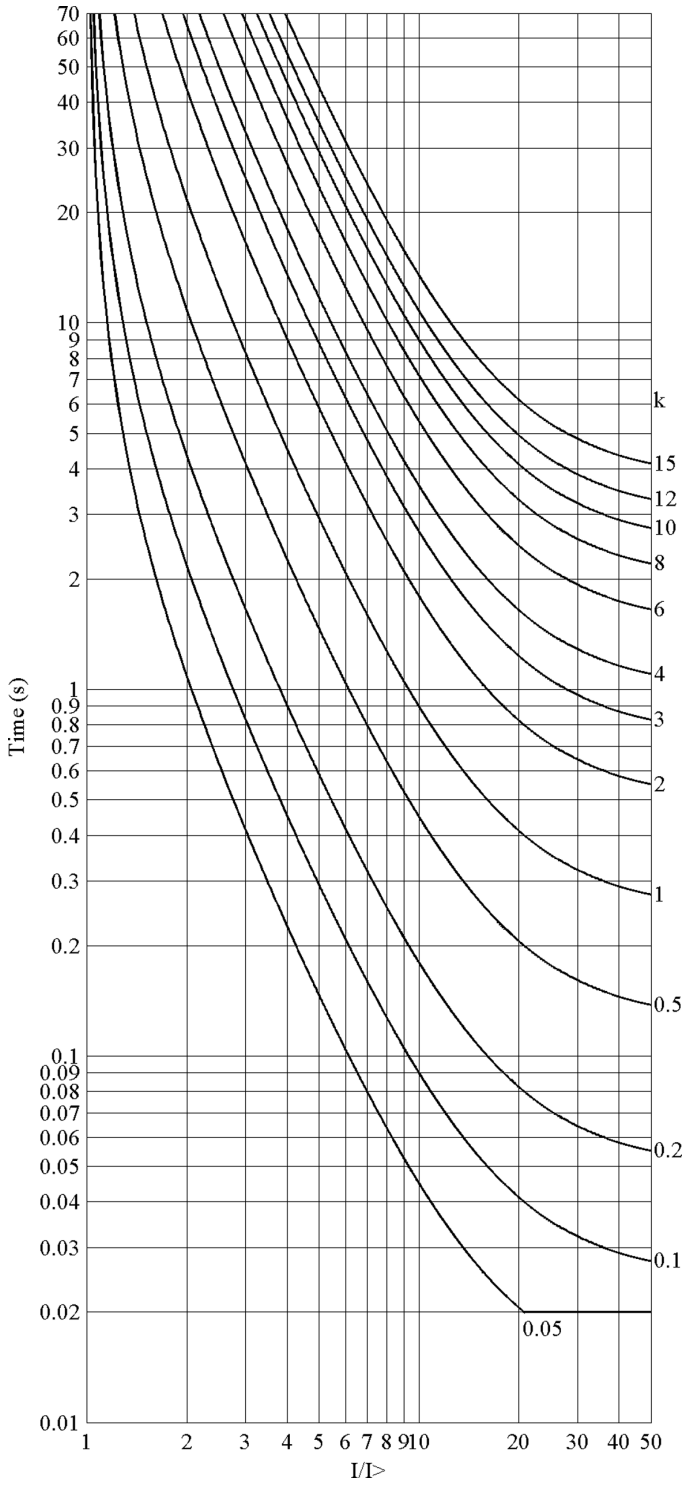

Figure 216: ANSI Long time extremely inverse time characteristics

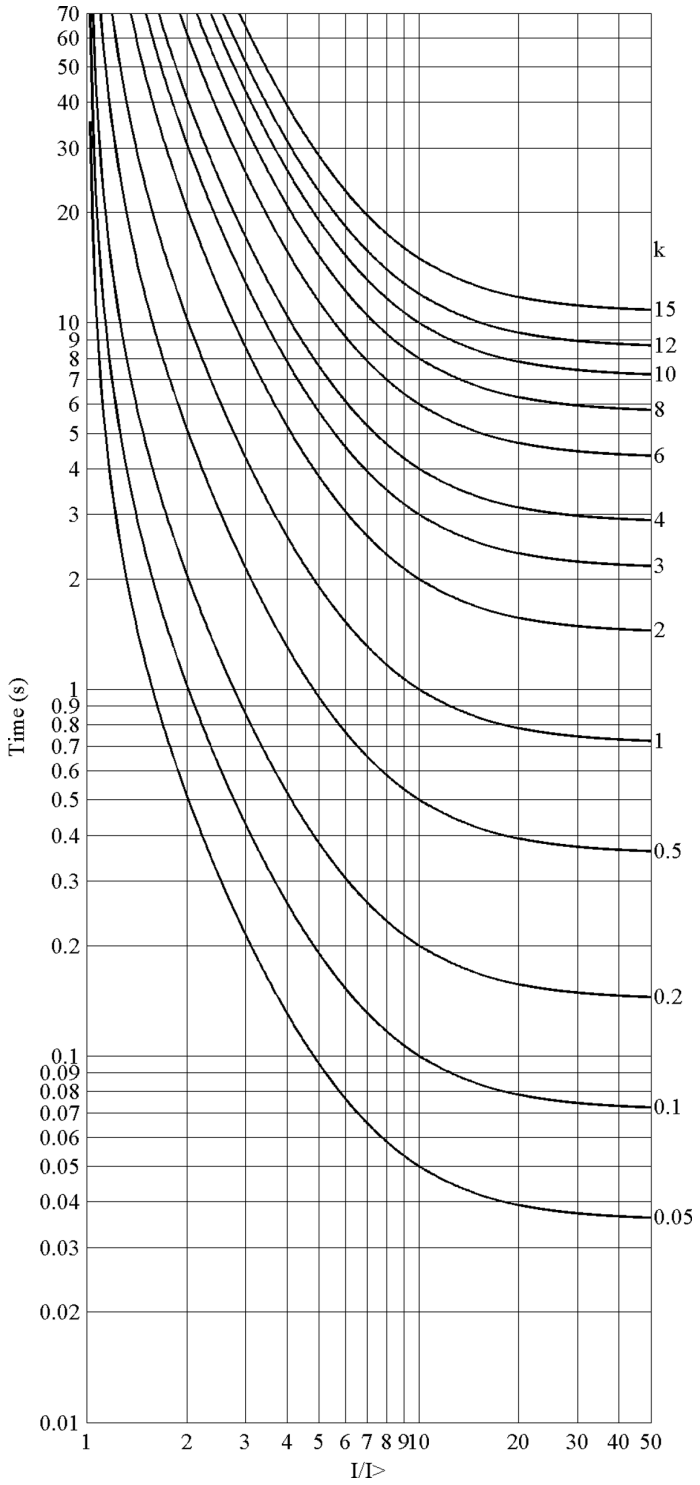

Figure 217: ANSI Long time very inverse time characteristics

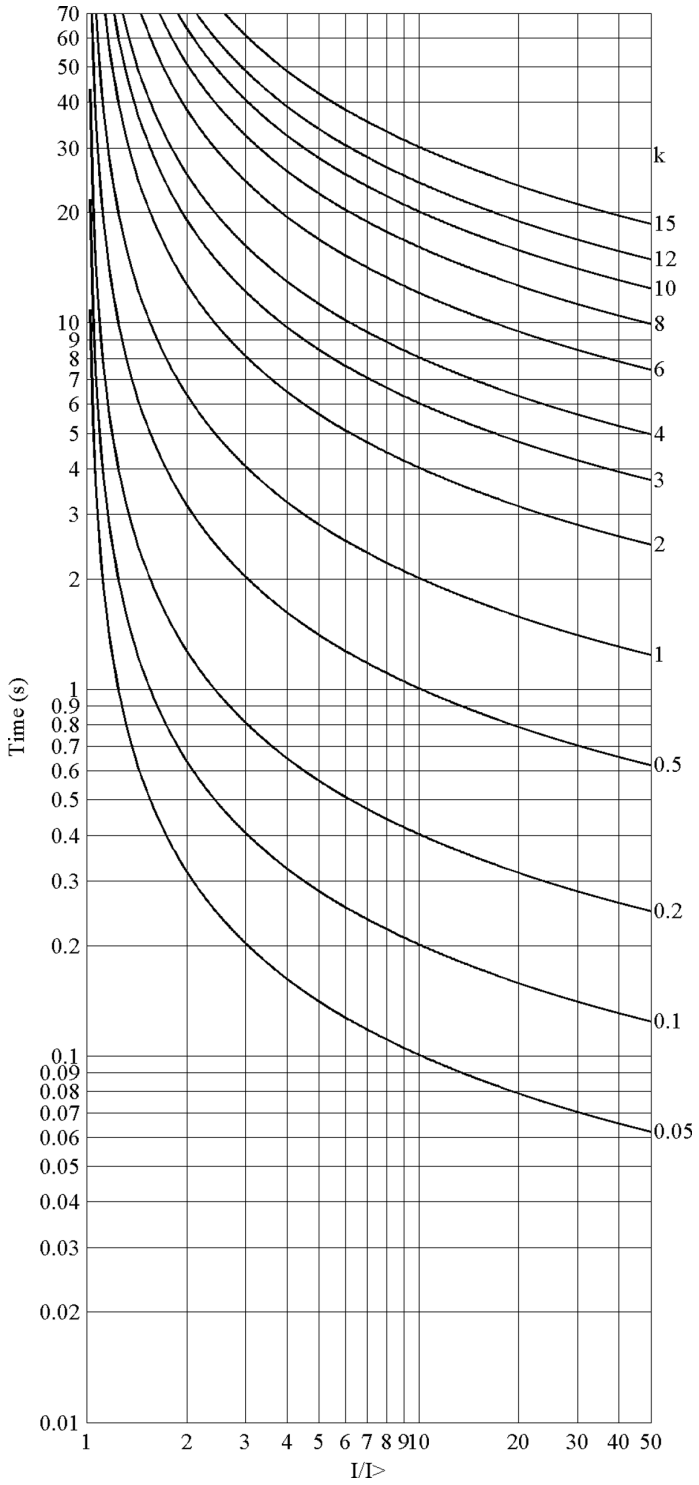

Figure 218: ANSI Long time inverse time characteristics

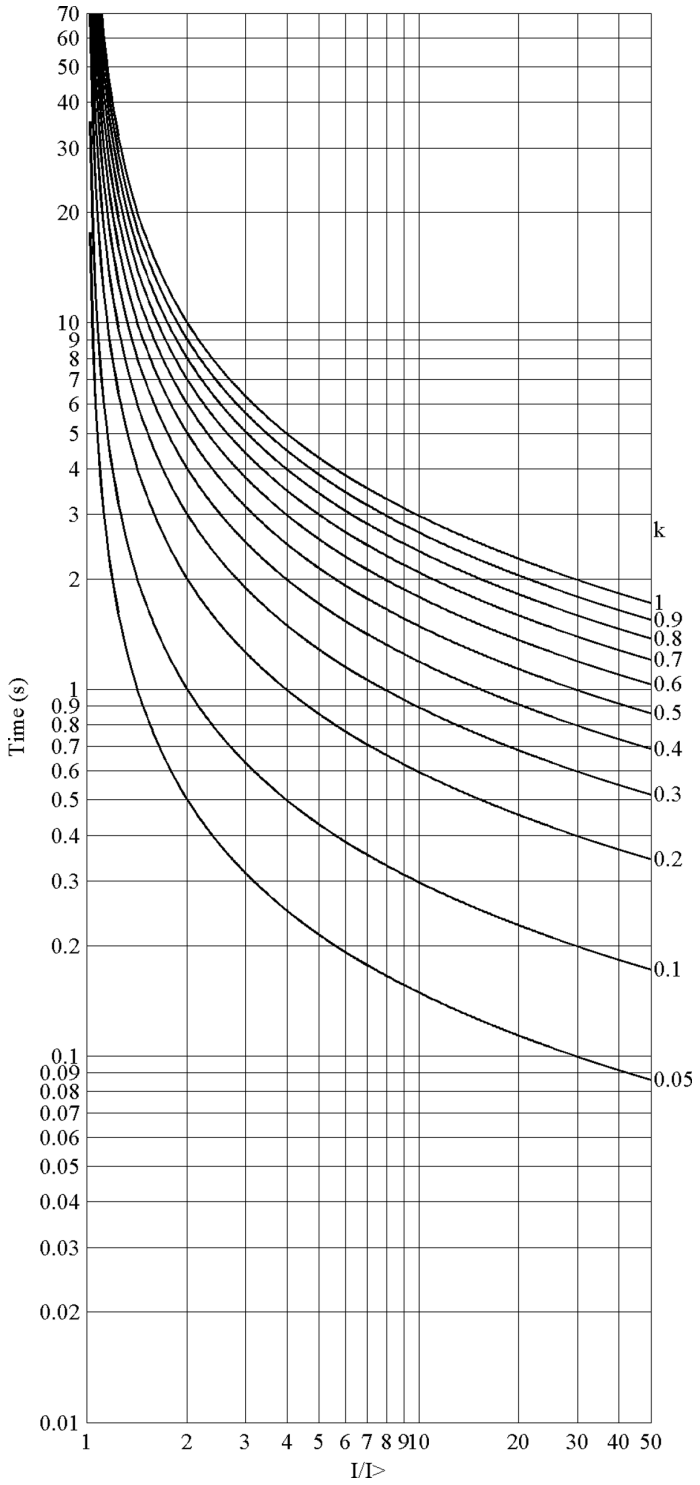

Figure 219: IEC Normal inverse time characteristics

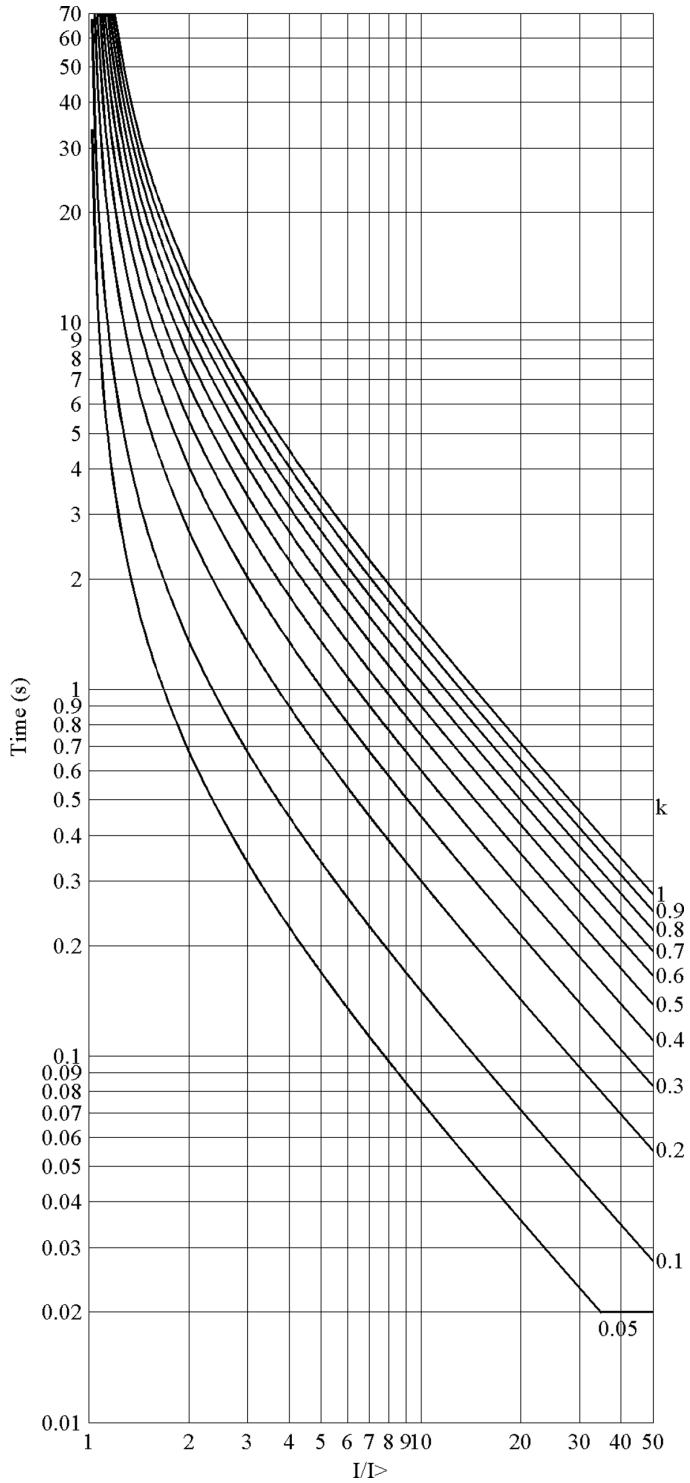

Figure 220: IEC Very inverse time characteristics

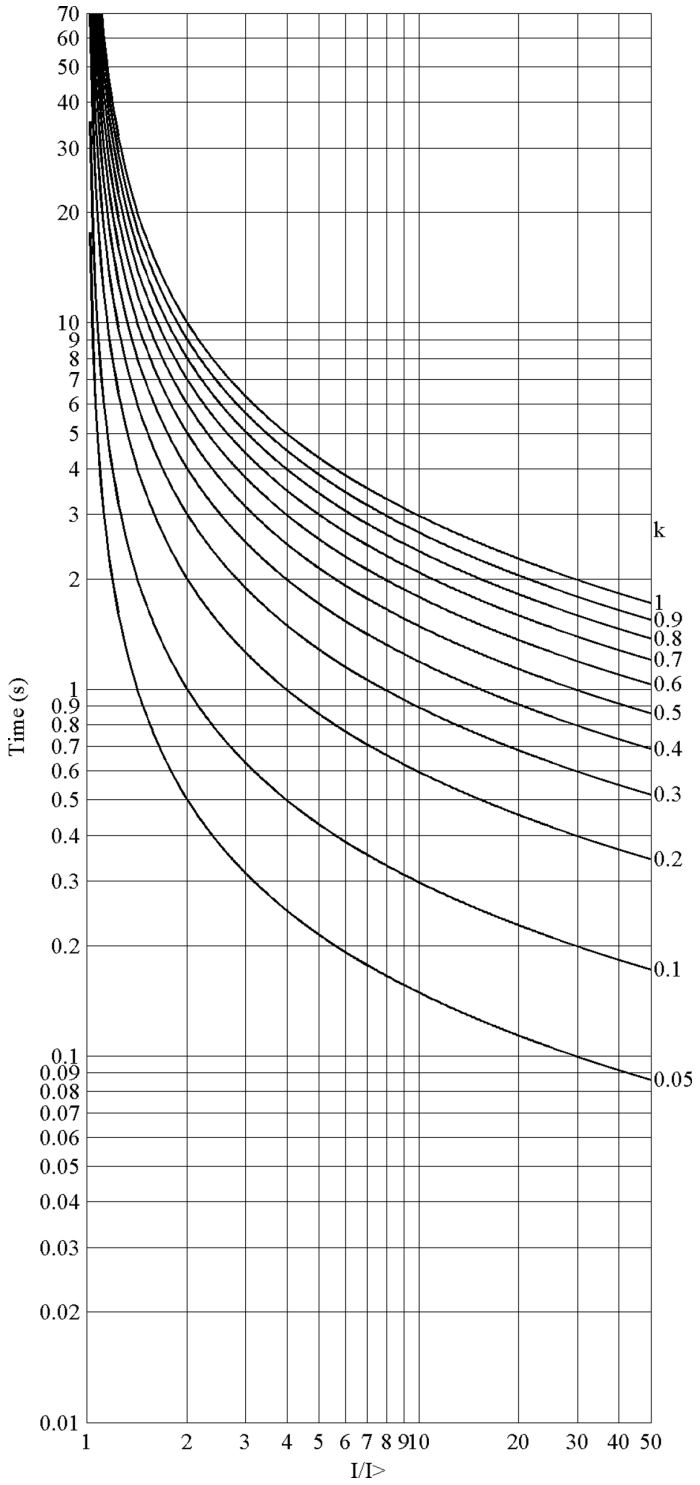

Figure 221: IEC Inverse time characteristics

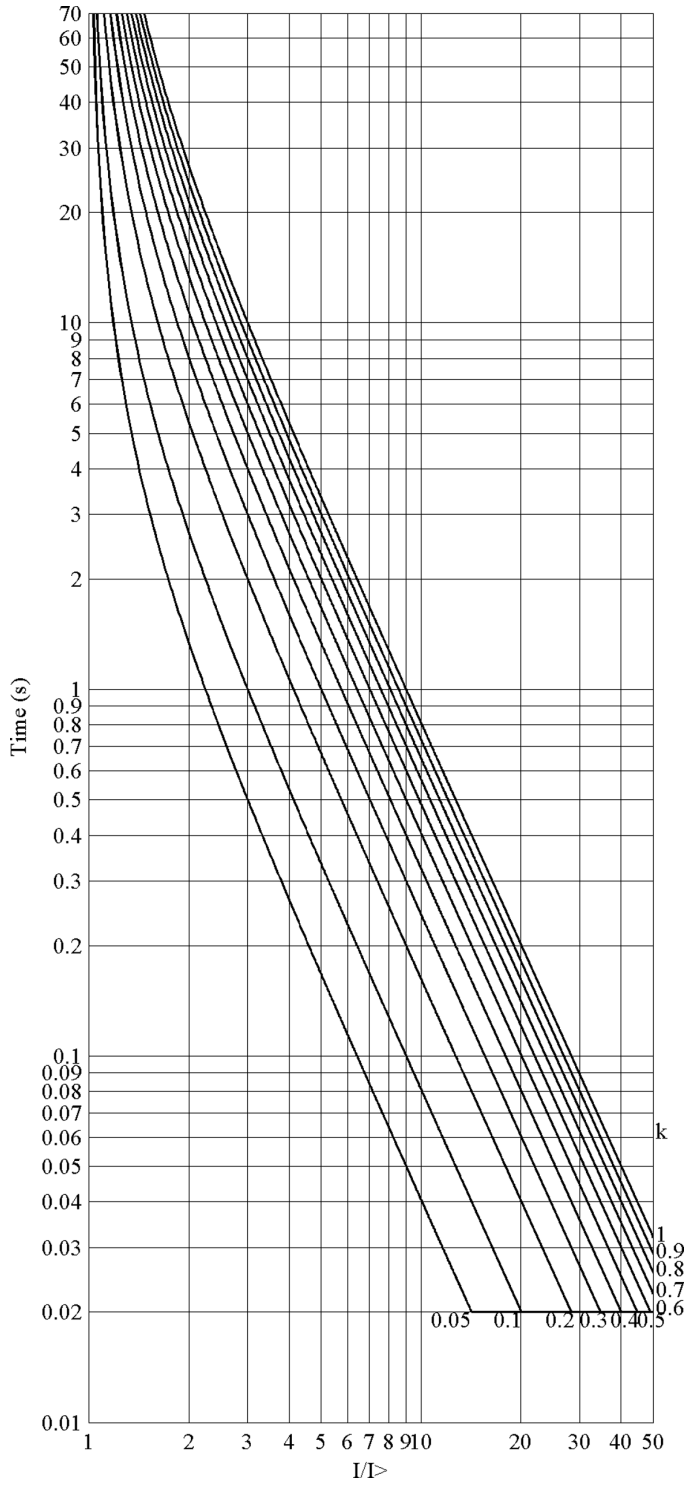

Figure 222: IEC Extremely inverse time characteristics

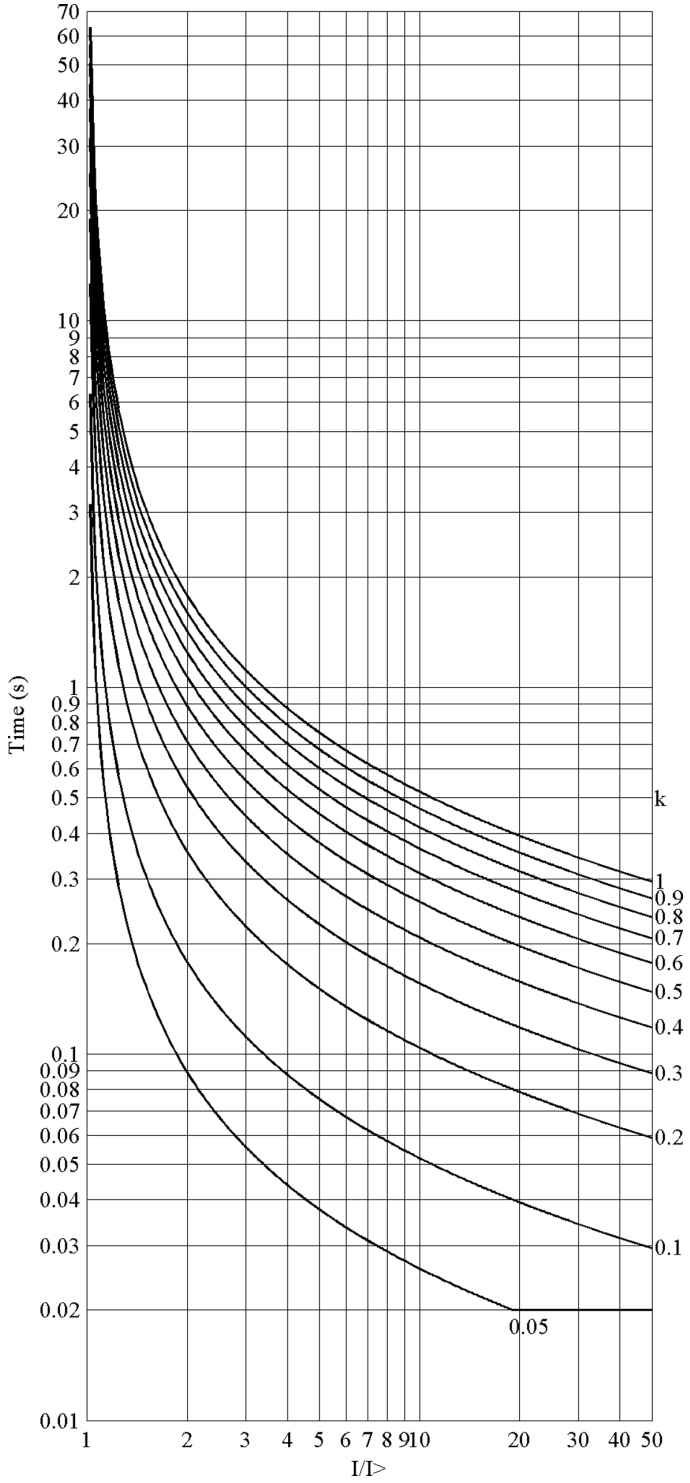

Figure 223: IEC Short time inverse time characteristics

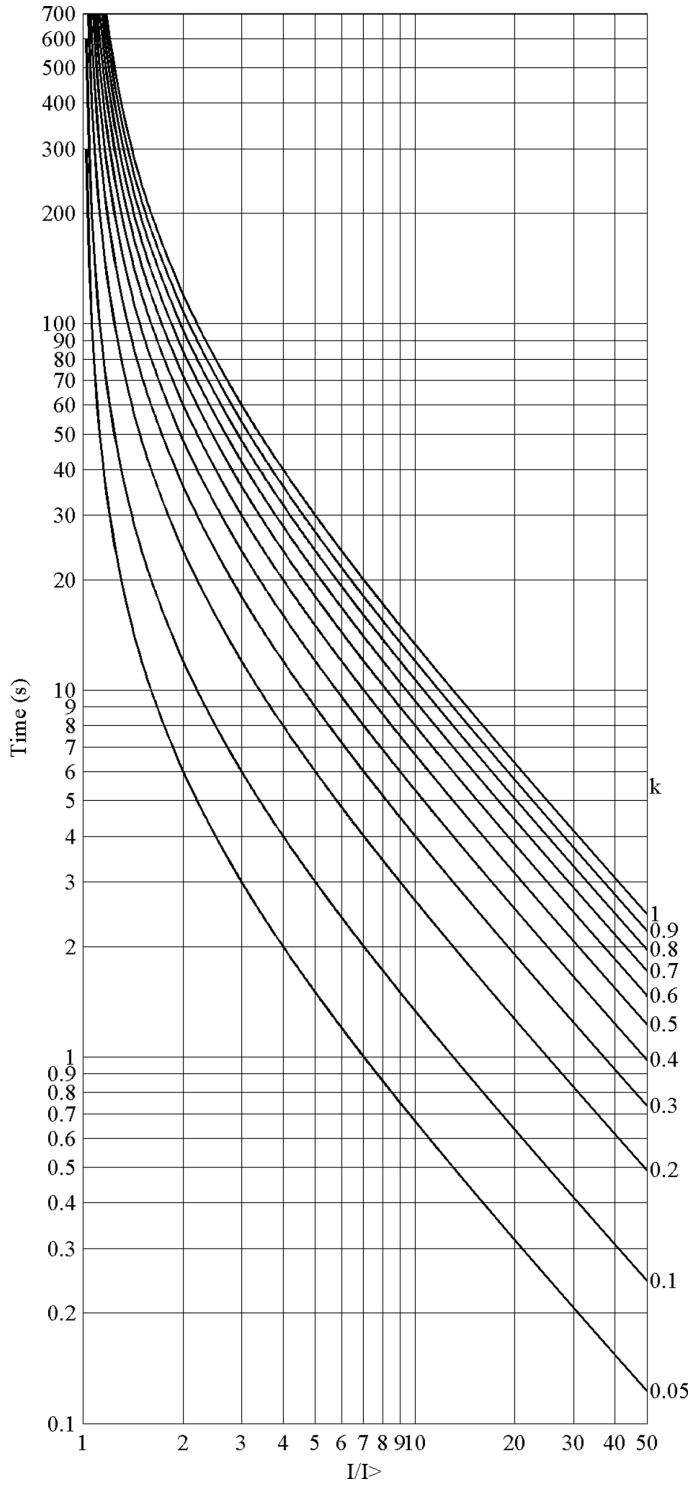

Figure 224: IEC Long time inverse time characteristics

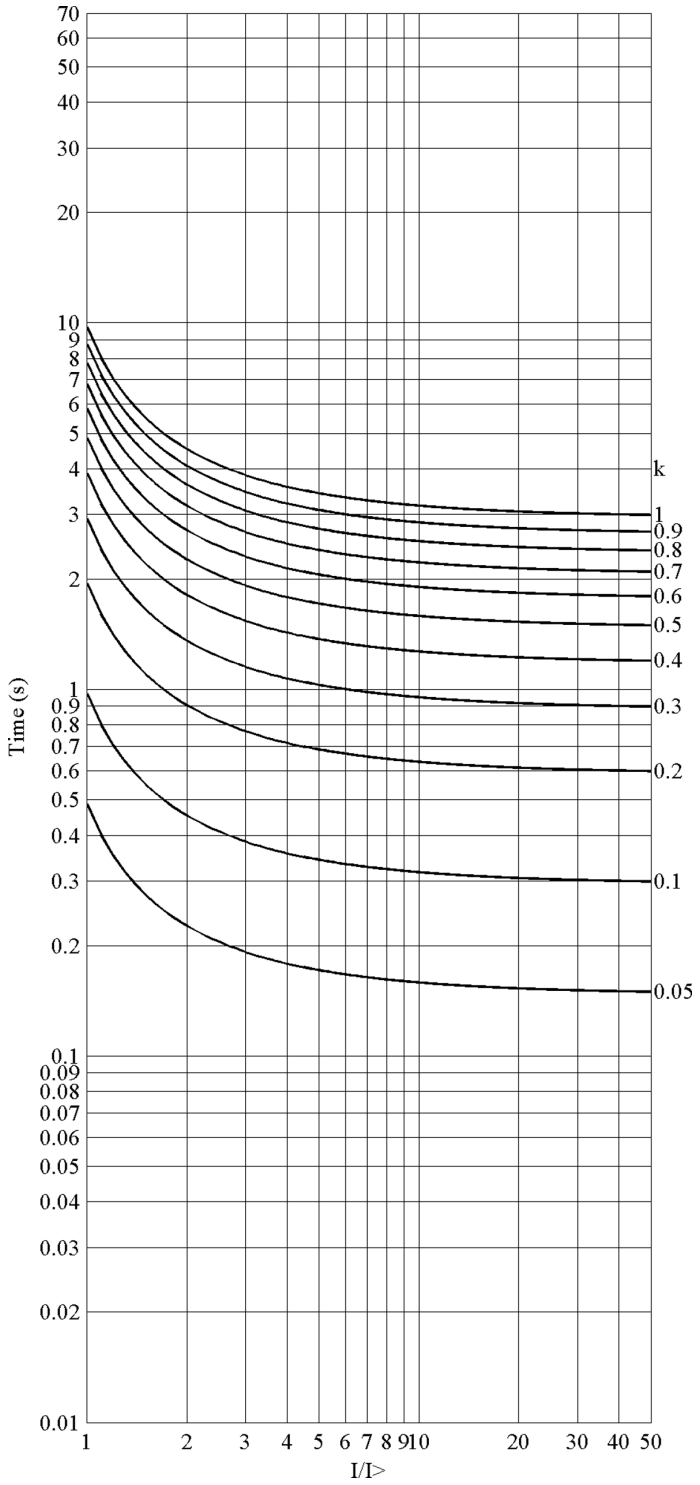

Figure 225: RI-type inverse time characteristics

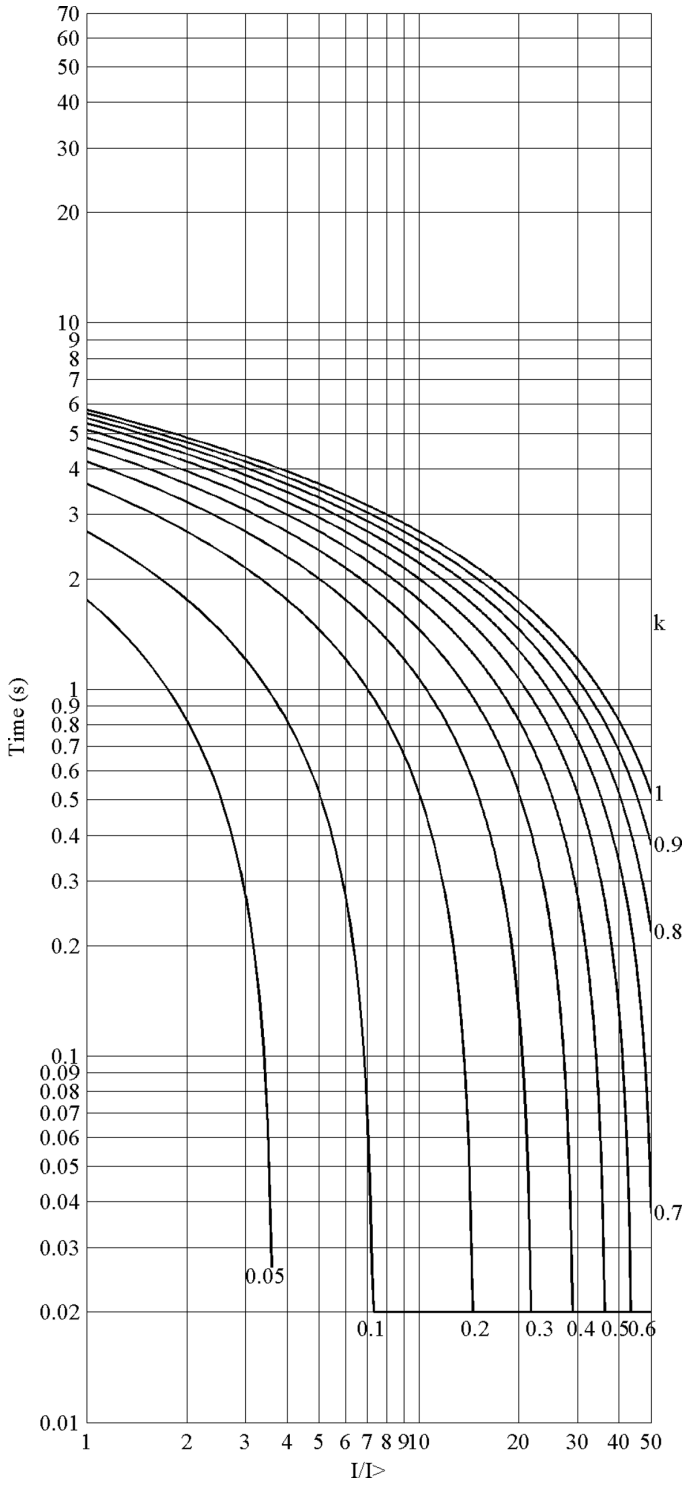

Figure 226: RD-type inverse time characteristics

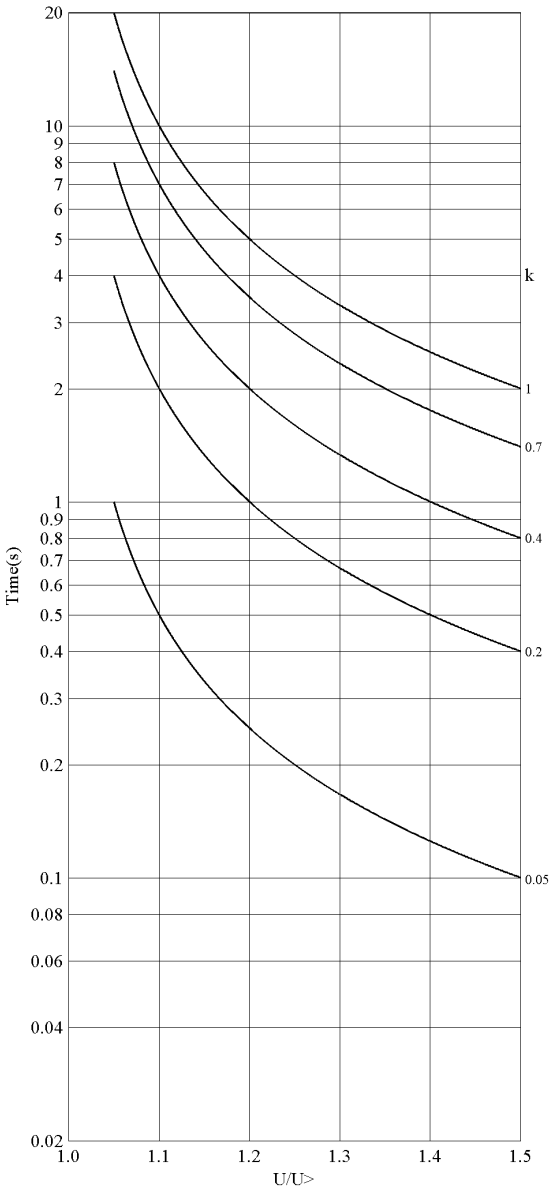

Figure 227: Inverse curve A characteristic of overvoltage protection

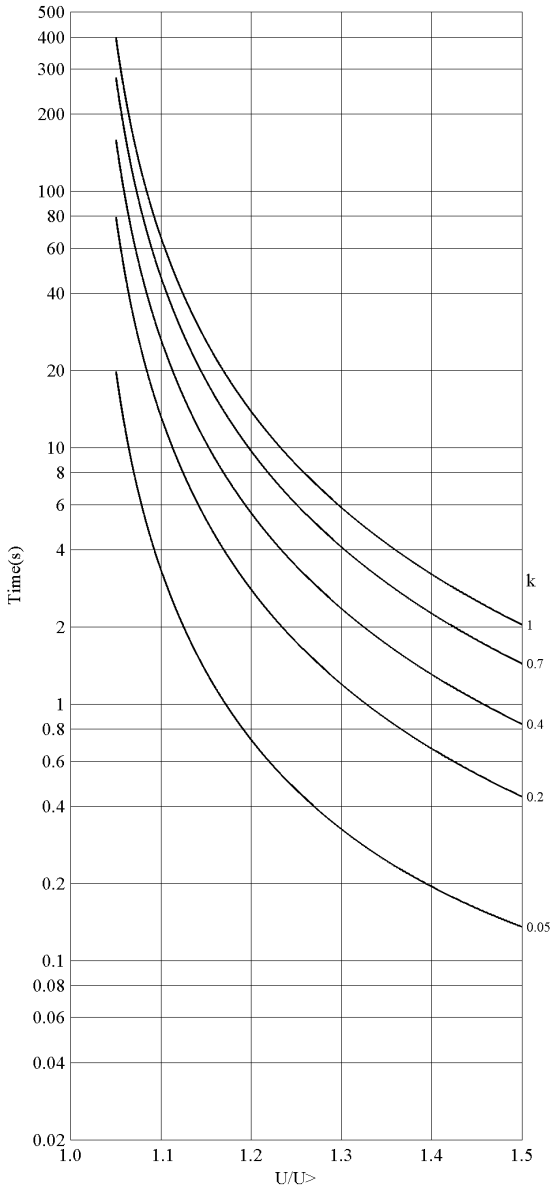

Figure 228: Inverse curve B characteristic of overvoltage protection

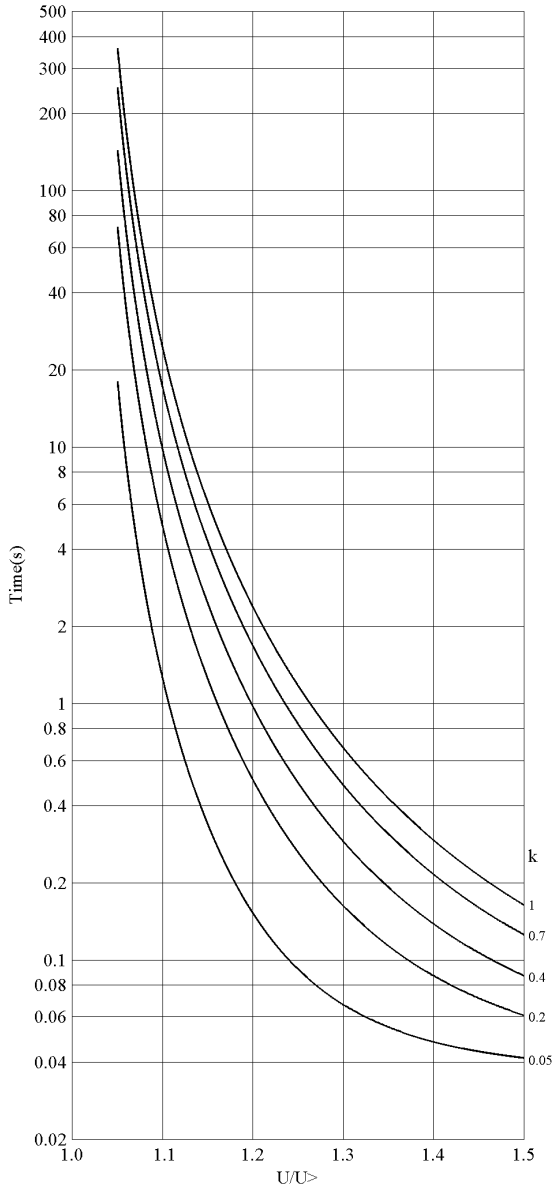

Figure 229: Inverse curve C characteristic of overvoltage protection

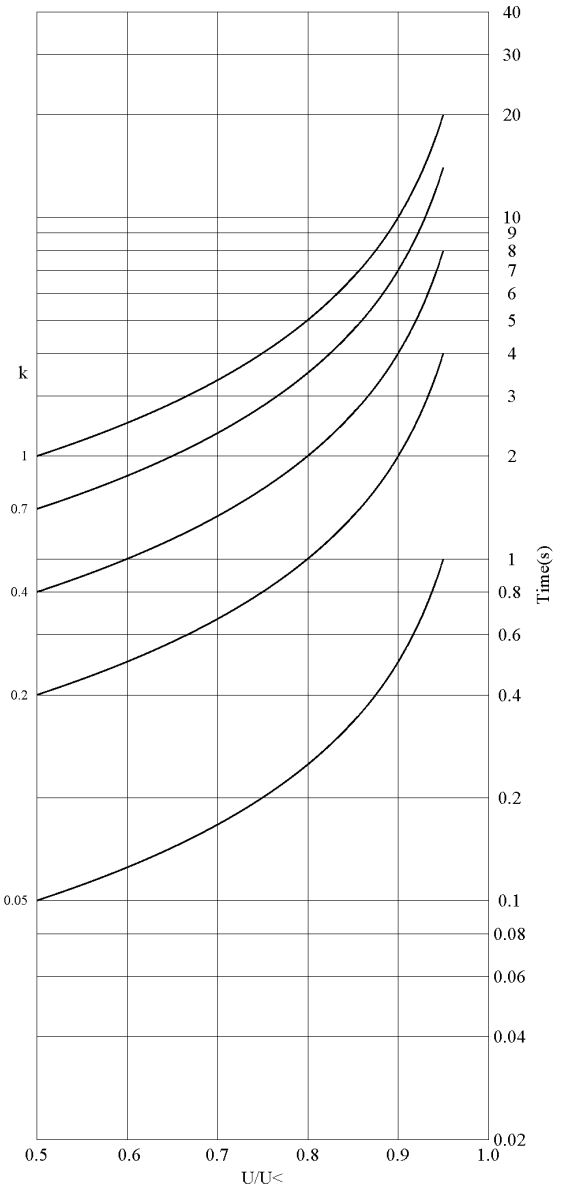

Figure 230: Inverse curve A characteristic of undervoltage protection

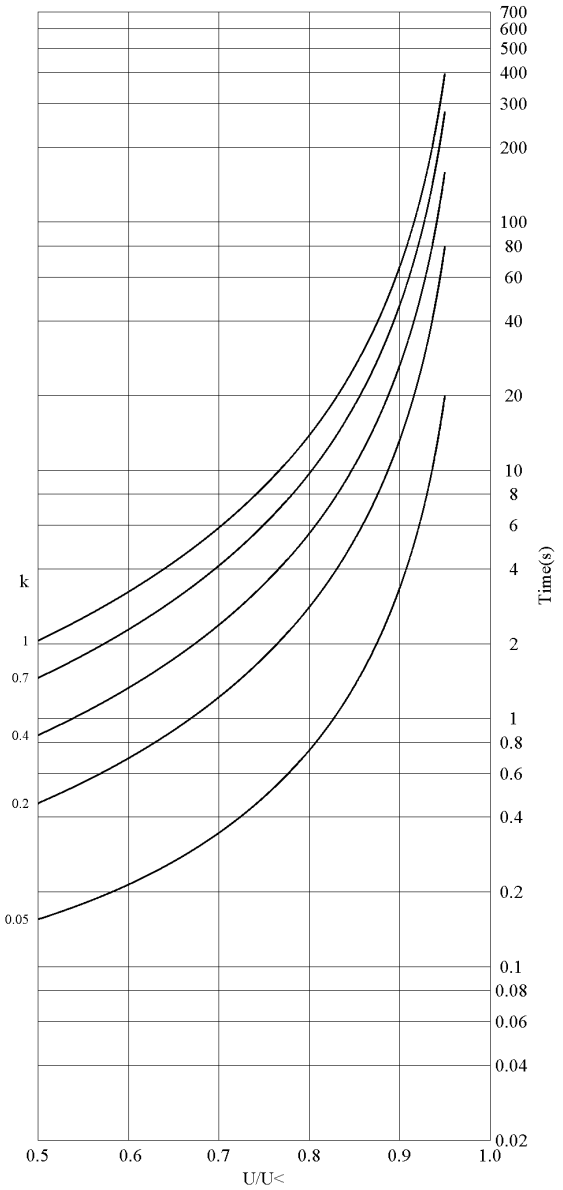

Figure 231: Inverse curve B characteristic of undervoltage protection

Section 21 Glossary

AC	Alternating current
ACT	Application configuration tool within PCM600
A/D converter	Analog-to-digital converter
ADBS	Amplitude deadband supervision
AI	Analog input
ANSI	American National Standards Institute
AR	Autoreclosing
ASCT	Auxiliary summation current transformer
ASD	Adaptive signal detection
AWG	American Wire Gauge standard
BI	Binary input
BOS	Binary outputs status
BR	External bistable relay
BS	British Standards
CAN	Controller Area Network. ISO standard (ISO 11898) for serial communication
CB	Circuit breaker
CCITT	Consultative Committee for International Telegraph and Telephony. A United Nations-sponsored standards body within the International Telecommunications Union.
CCVT	Capacitive Coupled Voltage Transformer
Class C	Protection Current Transformer class as per IEEE/ ANSI
CMPPS	Combined megapulses per second
CMT	Communication Management tool in PCM600
CO cycle	Close-open cycle
Codirectional	Way of transmitting G.703 over a balanced line. Involves two twisted pairs making it possible to transmit information in both directions

COMTRADE	Standard Common Format for Transient Data Exchange format for Disturbance recorder according to IEEE/ANSI C37.111, 1999 / IEC60255-24
Contra-directional	Way of transmitting G.703 over a balanced line. Involves four twisted pairs, two of which are used for transmitting data in both directions and two for transmitting clock signals
CPU	Central processor unit
CR	Carrier receive
CRC	Cyclic redundancy check
CROB	Control relay output block
CS	Carrier send
CT	Current transformer
CVT or CCVT	Capacitive voltage transformer
DAR	Delayed autoreclosing
DARPA	Defense Advanced Research Projects Agency (The US developer of the TCP/IP protocol etc.)
DBDL	Dead bus dead line
DBLL	Dead bus live line
DC	Direct current
DFC	Data flow control
DFT	Discrete Fourier transform
DHCP	Dynamic Host Configuration Protocol
DIP-switch	Small switch mounted on a printed circuit board
DI	Digital input
DLLB	Dead line live bus
DNP	Distributed Network Protocol as per IEEE/ANSI Std. 1379-2000
DR	Disturbance recorder
DRAM	Dynamic random access memory
DRH	Disturbance report handler
DSP	Digital signal processor
DTT	Direct transfer trip scheme
EHV network	Extra high voltage network
EIA	Electronic Industries Association

EMC	Electromagnetic compatibility
EMF	(Electric Motive Force)
EMI	Electromagnetic interference
EnFP	End fault protection
EPA	Enhanced performance architecture
ESD	Electrostatic discharge
FCB	Flow control bit; Frame count bit
FOX 20	Modular 20 channel telecommunication system for speech, data and protection signals
FOX 512/515	Access multiplexer
FOX 6Plus	Compact time-division multiplexer for the transmission of up to seven duplex channels of digital data over optical fibers
G.703	Electrical and functional description for digital lines used by local telephone companies. Can be transported over balanced and unbalanced lines
GCM	Communication interface module with carrier of GPS receiver module
GDE	Graphical display editor within PCM600
GI	General interrogation command
GIS	Gas-insulated switchgear
GOOSE	Generic object-oriented substation event
GPS	Global positioning system
HDLC protocol	High-level data link control, protocol based on the HDLC standard
HFBR connector type	Plastic fiber connector
HMI	Human-machine interface
HSAR	High speed autoreclosing
HV	High-voltage
HVDC	High-voltage direct current
IDBS	Integrating deadband supervision
IEC	International Electrical Committee
IEC 60044-6	IEC Standard, Instrument transformers – Part 6: Requirements for protective current transformers for transient performance

IEC 61850	Substation automation communication standard
IEC 61850–8–1	Communication protocol standard
IEEE	Institute of Electrical and Electronics Engineers
IEEE 802.12	A network technology standard that provides 100 Mbits/s on twisted-pair or optical fiber cable
IEEE P1386.1	PCI Mezzanine Card (PMC) standard for local bus modules. References the CMC (IEEE P1386, also known as Common Mezzanine Card) standard for the mechanics and the PCI specifications from the PCI SIG (Special Interest Group) for the electrical EMF (Electromotive force).
IEEE 1686	Standard for Substation Intelligent Electronic Devices (IEDs) Cyber Security Capabilities
IED	Intelligent electronic device
I-GIS	Intelligent gas-insulated switchgear
Instance	When several occurrences of the same function are available in the IED, they are referred to as instances of that function. One instance of a function is identical to another of the same kind but has a different number in the IED user interfaces. The word "instance" is sometimes defined as an item of information that is representative of a type. In the same way an instance of a function in the IED is representative of a type of function.
IP	1. Internet protocol. The network layer for the TCP/IP protocol suite widely used on Ethernet networks. IP is a connectionless, best-effort packet-switching protocol. It provides packet routing, fragmentation and reassembly through the data link layer. 2. Ingression protection, according to IEC standard
IP 20	Ingression protection, according to IEC standard, level IP20- Protected against solidforeign objects of12.5mm diameter andgreater.
IP 40	Ingression protection, according to IEC standard, level IP40- Protected against solid foreign objects of 1mm diameter and greater.
IP 54	Ingression protection, according to IEC standard, level IP54-Dust-protected,protected againstsplashing water.
IRF	Internal failure signal
IRIG-B:	InterRange Instrumentation Group Time code format B, standard 200
ITU	International Telecommunications Union

LAN	Local area network
LIB 520	High-voltage software module
LCD	Liquid crystal display
LDD	Local detection device
LED	Light-emitting diode
MCB	Miniature circuit breaker
MCM	Mezzanine carrier module
MVB	Multifunction vehicle bus. Standardized serial bus originally developed for use in trains.
NCC	National Control Centre
OCO cycle	Open-close-open cycle
OCP	Overcurrent protection
OLTC	On-load tap changer
OV	Over-voltage
Overreach	A term used to describe how the relay behaves during a fault condition. For example, a distance relay is overreaching when the impedance presented to it is smaller than the apparent impedance to the fault applied to the balance point, that is, the set reach. The relay “sees” the fault but perhaps it should not have seen it.
PCI	Peripheral component interconnect, a local data bus
PCM	Pulse code modulation
PCM600	Protection and control IED manager
PC-MIP	Mezzanine card standard
PMC	PCI Mezzanine card
POR	Permissive overreach
POTT	Permissive overreach transfer trip
Process bus	Bus or LAN used at the process level, that is, in near proximity to the measured and/or controlled components
PSM	Power supply module
PST	Parameter setting tool within PCM600
PT ratio	Potential transformer or voltage transformer ratio
PUTT	Permissive underreach transfer trip
RASC	Synchrocheck relay, COMBIFLEX

RCA	Relay characteristic angle
RFPP	Resistance for phase-to-phase faults
	Resistance for phase-to-ground faults
RISC	Reduced instruction set computer
RMS value	Root mean square value
RS422	A balanced serial interface for the transmission of digital data in point-to-point connections
RS485	Serial link according to EIA standard RS485
RTC	Real-time clock
RTU	Remote terminal unit
SA	Substation Automation
SBO	Select-before-operate
SC	Switch or push button to close
SCS	Station control system
SCADA	Supervision, control and data acquisition
SCT	System configuration tool according to standard IEC 61850
SDU	Service data unit
SMA connector	Subminiature version A, A threaded connector with constant impedance.
SMT	Signal matrix tool within PCM600
SMS	Station monitoring system
SNTP	Simple network time protocol – is used to synchronize computer clocks on local area networks. This reduces the requirement to have accurate hardware clocks in every embedded system in a network. Each embedded node can instead synchronize with a remote clock, providing the required accuracy.
SRY	Switch for CB ready condition
ST	Switch or push button to trip
Starpoint	Neutral/Wye point of transformer or generator
SVC	Static VAr compensation
TC	Trip coil
TCS	Trip circuit supervision
TCP	Transmission control protocol. The most common transport layer protocol used on Ethernet and the Internet.

TCP/IP	Transmission control protocol over Internet Protocol. The de facto standard Ethernet protocols incorporated into 4.2BSD Unix. TCP/IP was developed by DARPA for Internet working and encompasses both network layer and transport layer protocols. While TCP and IP specify two protocols at specific protocol layers, TCP/IP is often used to refer to the entire US Department of Defense protocol suite based upon these, including Telnet, FTP, UDP and RDP.
TNC connector	Threaded Neill-Concelman, a threaded constant impedance version of a BNC connector
TPZ, TPY, TPX, TPS	Current transformer class according to IEC
UMT	User management tool
Underreach	A term used to describe how the relay behaves during a fault condition. For example, a distance relay is underreaching when the impedance presented to it is greater than the apparent impedance to the fault applied to the balance point, that is, the set reach. The relay does not “see” the fault but perhaps it should have seen it. See also Overreach.
UTC	Coordinated Universal Time. A coordinated time scale, maintained by the Bureau International des Poids et Mesures (BIPM), which forms the basis of a coordinated dissemination of standard frequencies and time signals. UTC is derived from International Atomic Time (TAI) by the addition of a whole number of "leap seconds" to synchronize it with Universal Time 1 (UT1), thus allowing for the eccentricity of the Earth's orbit, the rotational axis tilt (23.5 degrees), but still showing the Earth's irregular rotation, on which UT1 is based. The Coordinated Universal Time is expressed using a 24-hour clock, and uses the Gregorian calendar. It is used for aeroplane and ship navigation, where it is also sometimes known by the military name, "Zulu time." "Zulu" in the phonetic alphabet stands for "Z", which stands for longitude zero.
UV	Undervoltage
WEI	Weak end infeed logic
VT	Voltage transformer
X.21	A digital signalling interface primarily used for telecom equipment
$3I_O$	Three times zero-sequence current. Often referred to as the residual or the -fault current

$3V_O$	Three times the zero sequence voltage. Often referred to as the residual voltage or the neutral point voltage

Contact us

ABB Inc.
1021 Main Campus Drive
Raleigh, NC 27606, USA
Phone Toll Free: 1-800-HELP-365, menu option #8

ABB Inc.
3450 Harvester Road
Burlington, ON L7N 3W5, Canada
Phone Toll Free: 1-800-HELP-365, menu option #8

ABB Mexico S.A. de C.V.
Paseo de las Americas No. 31 Lomas Verdes 3a secc.
53125, Naucalpan, Estado De Mexico, MEXICO
Phone (+1) 440-585-7804, menu option #8

1MRK 504 129-UUS B © Copyright 2012 ABB. All rights reserved.

Power and productivity for a better world™