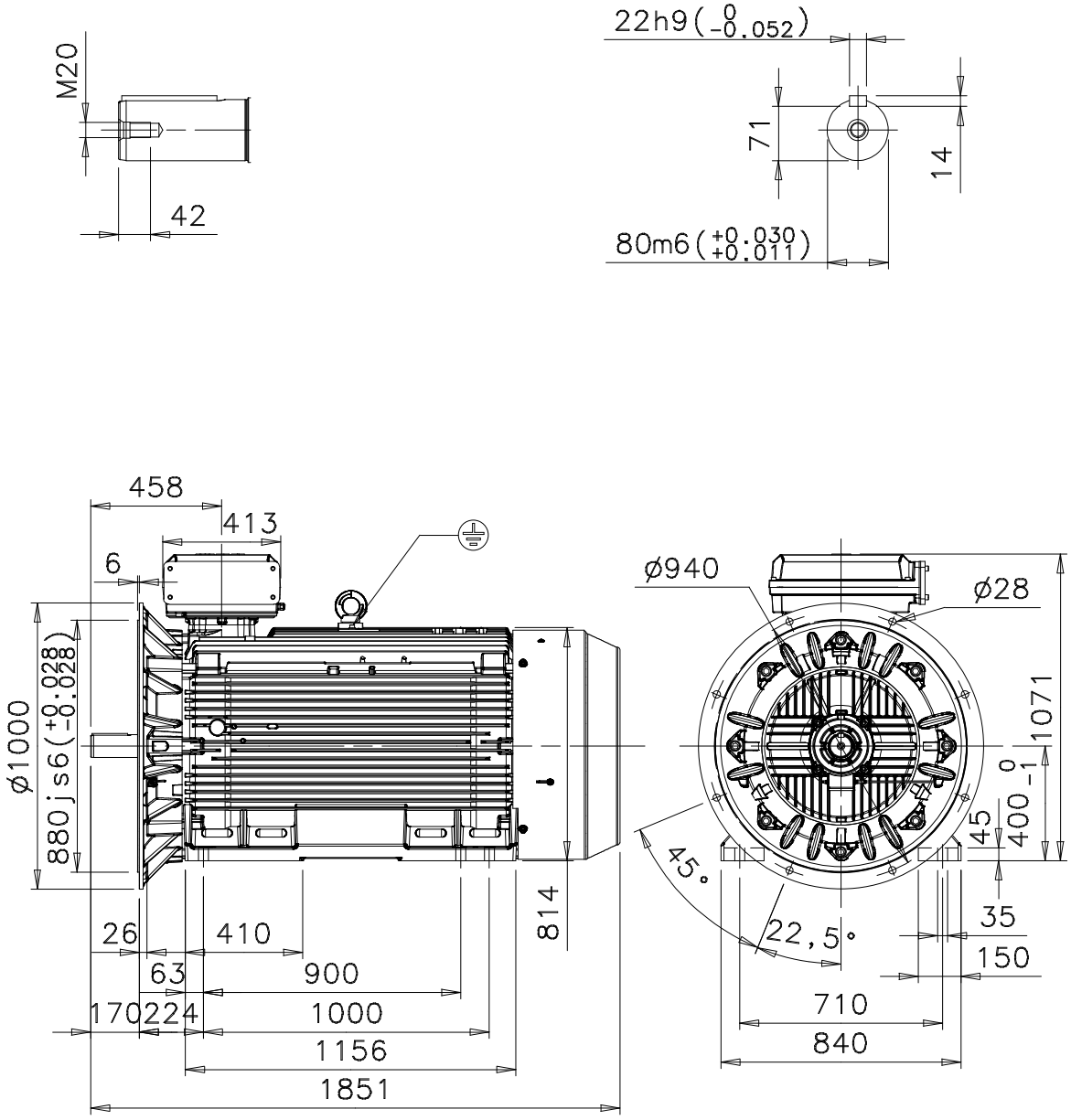

Additional information:

Dimension Print	Motor Type: M3KP 400L_2 B35, V36	Document No: 3GZF500140-6 A 13 KP 400 A
Description: STANDARD SQUIRREL CAGE MOTOR		
Unit: Electrical Machines / LV Motors Date: 25.05.2004	Issued by: J.Huhtamäki Approved by: M.Sevola	Replaces: Replaced by:
ABB Oy	Customer Reference:	ABB