ABB Network Partner AB

RXIIK 4 and RAIIK 400
Negative sequence overcurrent relay and protection assemblies

User´s Guide

1MRK 509 045-UEN

Version 1
May 1998

(SE980088)

(SE980083)

General

When a generator is connected to a balanced load, the phase currents are equal in magnitude and displaced electrically by 120 degrees. The flux wave produced by the stator currents rotate synchronously with the rotor and virtually no eddy currents are induced in the rotor parts. The same is the case when a motor is connected to a symmetrical voltage supply. Unbalanced currents give rise to a negative sequence current in the stator current. The negative sequence current produces an additional flux wave which rotates backwards and thus moves at twice the synchronous speed relative to the rotor. During these conditions, the temperature of the rotor may reach high levels which accelerates the ageing of the insulation and produces high mechanical stress.

The COMBIFLEX® negative sequence overcurrent protection RAIIK 400 effectively prevents such damage and, at the same time, allows full utilization of the protected object.

RAIIK 400 includes the measuring relay RXIIK 4, which is a micro-processor based negative sequence overcurrent relay with a wide setting range for operate values and time delays. The relay has two measuring stages, an adjustable alarm level with definite time delay and an adjustable start level with two different time characteristics, definite or inverse.

All RAIIK 400 protections are:

- mounted in the COMBIFLEX® modular system
- available with or without test switch
- available with or without DC-DC converter
- available with or without additional heavy duty tripping relay

List of contents

1 Application

1.1 Introduction

Generators are designed to run at a high load factor for a large number of years and permit certain incidents of abnormal working conditions. The machine and the auxiliaries are supervised by monitoring devices to keep the incidence of abnormal working conditions down to a minimum.

Electrical and mechanical faults can always occur, and the generator must be provided with a relay protection system, which in the case of a fault, quickly initiates the necessary actions. For medium and large size machines, two sub-systems with separate batteries or at least two separately fused d.c. groups for the generator protection are recommended.

1.2 General

When a generator is connected to a balanced load the phase currents are equal in magnitude and displaced 120 degrees from each other. The ampereturns wave produced by the stator currents rotate synchronously with the rotor and no eddy currents are induced in the rotor parts.

Unbalanced currents give rise to a negative sequence component in the stator current. The negative sequence current produces an additional ampereturn wave which rotates at synchronously speed in the opposite direction than the rotor. The eddy currents which are induced in the rotor parts will then have the double network frequency. During this conditions, the temperature of the rotor may reach high levels. This accelerates the ageing of the insulation and originates high mechanical stress.

The heating effect on the rotor is determined by the product:

$$t = K \times \left(\frac{I_b}{I_-} \right)^2$$

where

I_b = Rated current of the generator or motor

I_- = Negative sequence current

t = Time in seconds

K = A constant in seconds that is characteristic for the generator or motor.
This constant represents the time which a generator or motor can permit a negative sequence current which is equal to the rated generator or motor current.

The capability for the machine to withstand continuously unbalanced currents is expressed as a negative sequence current in percent of rated generator or motor current.

Typical values for generators are given in the table below.

Type of generator	K-value	Maximum permissible I_- (%) continuously
Cylindrical rotor:		
indirectly cooled	30	10
directly cooled	5 - 10	5 - 8
Salient poles:		
with damper winding	40	10
without damper wind	40	5

The lower values in the table above are typical for large machines.

From the formula

$$t = K \times \left(\frac{I_b}{I_-}\right)^2$$

can be deducted that the permissible time for a certain amount of negative sequence current loading is inversely proportional to the square of the negative sequence current. The protective function should have a corresponding operating time characteristic and a thermal memory with a cooling characteristic that can be set to coincide with the characteristic of the machine.

A short circuit between two-phases will give a large negative sequence current, but these faults are normally cleared by the short circuit protection in much shorter time than the operate time of the negative sequence protection.

Examples of unsymmetrical loads which increase the negative sequence current are:

- Unbalanced single phase loads such as railroads and induction furnaces.
- Unsymmetrical transmission lines like non-transposed phase wires or broken phase conductor.
- Failure on one or two breaker or disconnector poles at opening or closing.

Motors
A relatively small unbalance in the supply voltage can give rise to an appreciable negative sequence load current of a motor.
A negative sequence voltage of 2% may give rise to a negative sequence motor current of 10 - 15%.

Negative sequence overcurrent protection should be included if there is a risk of unbalanced loading that exceed the maximum permissible continuous value.

1.3 Protection RAIIK 400

The measuring unit in the RAIIK 400 protection is the negative sequence overcurrent relay RXIIK 4. The measuring relay is based on the RX *4 platform and the following functions are provided:

- Settable alarm level, down to 3% of the generators rated current and with definite time characteristic up to 100 seconds.
- Settable start level, down to 4% of the generators rated current and with inverse time or definite time characteristic.
- Inverse time characteristic with K settable in the range of 0 - 100 seconds or definite time in the range of 0 - 100 minutes.
- Thermal memory for block and trip functions with settable cooling time up to 200 minutes.
- Two groups of settings for both alarm and start.
  The chosen group can be changed during normal service.
- Flexible configuration of the binary inputs and binary outputs.

The thermal memory secures the protection in case of repeated unbalanced conditions. The alarm function with definite time is provided for abnormal conditions.

1.4 Requirements on the current transformers

In order to avoid the risk of unwanted operation of the negative sequence current protection, caused by transient d.c, the saturation factor of the CT's at actual burden should meet the requirement:

$$n = ALF \times \frac{S_n + R_2 \times I_{sn}^2}{S + R_2 \times I_{sn}^2} \times \frac{I_{sn}}{I_{2g}} > 10$$

where

n	=	Saturation factor at the actual burden
ALF	=	Accuracy limiting factor acc. to IEC 185
S_n	=	Rated burden of the CT (VA)
S	=	Actual burden in VA at rated current I_{sn}
R_2	=	Resistance of the secondary winding of the CT
I_{sn}	=	Rated secondary current of the CT
I_{2g}	=	Rated secondary generator or motor load current

2 Measurement Principles

The RXIIK 4 relay constitutes the measuring unit of RAIIK 400. For setting of operate values and configuration of I/O signals, see section 4.

2.1 Principles

To provide a suitable voltage for the electronic measurement circuits there are three input current transformers for measuring the negative sequence current in a three-phase system. The voltage from each transformer is applied to zero detectors and to the measuring circuitry trough a bandpass filters with a centre frequency equal to 55 Hz.

The relay has a sampling rate of 18 samples per cycle for the input current signals IL1, IL2 and IL3, within the frequency range 40 - 70 Hz. The sampled data are used for the calculation of negative sequence current.
A three-phase network system can be represented as a sum of the positive (I_+), negative (I_-) and zero sequence (I_0) components.

$$IL1 = I_0 + I_+ + I_-$$

$$IL2 = I_0 + a^2 \times I_+ + a \times I_-$$

$$IL3 = I_0 + a \times I_+ + a^2 \times I_-$$

Where $a^2 = e^{j240°}$ and $a = e^{j120°}$

This gives the following equation: $I_- = 1/3\ (IL1 + a^2 \times IL2 + a \times IL3)$

The numerical calculation of the negative sequence current is performed by summing samples taken at 0°, 240° and 120° intervals. The digital representation is valid for non sinusoidal currents.

The calculated negative sequence current is compared with the set operate value for the I_Alarm and the I_Start function. A simplified logic diagram for the RXIIK 4 relay is shown in Fig. 1.

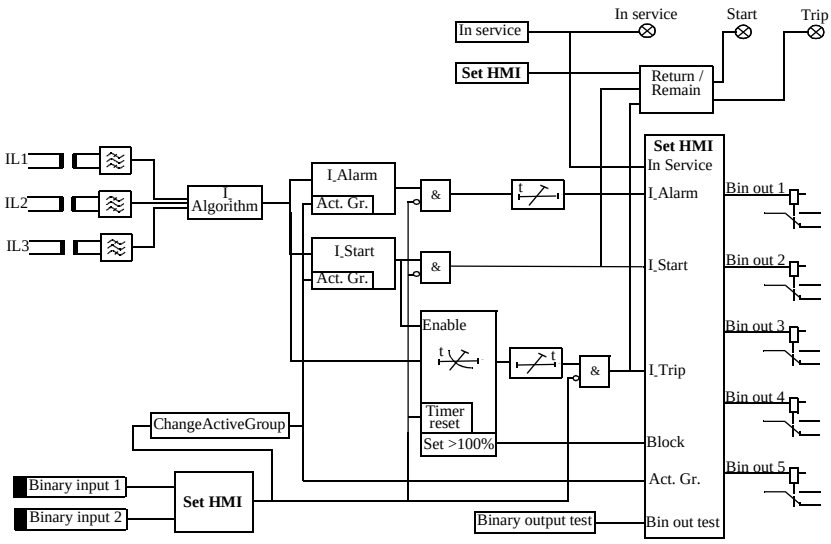

Fig. 1 Simplified logic diagram for the RXIIK 4 relay.

2.2 Inverse characteristic

The calculation for the inverse time characteristic is made as follow:

The calculation of the inverse time $t = K/I_-^2$ is started when I_- exceeds the set start value, I_- in per unit of machine rated current, I_b. Every 6 ms a figure proportional to I_-^2 is added in a counter and the sum is compared with the value which gives tripping. The tripping value is proportional to the setting of the constant K.

When I_- decreases below the set start value, the sum in the counter is reduced by a figure which is proportional to the CoolT. The rate of decrement corresponds to reduction of the figure in the counter from tripping value (100%) to zero during the cooling down time.

For definite time delay, a fixed figure is added each 6 ms in a counter and the sum is compared with the set operate time.

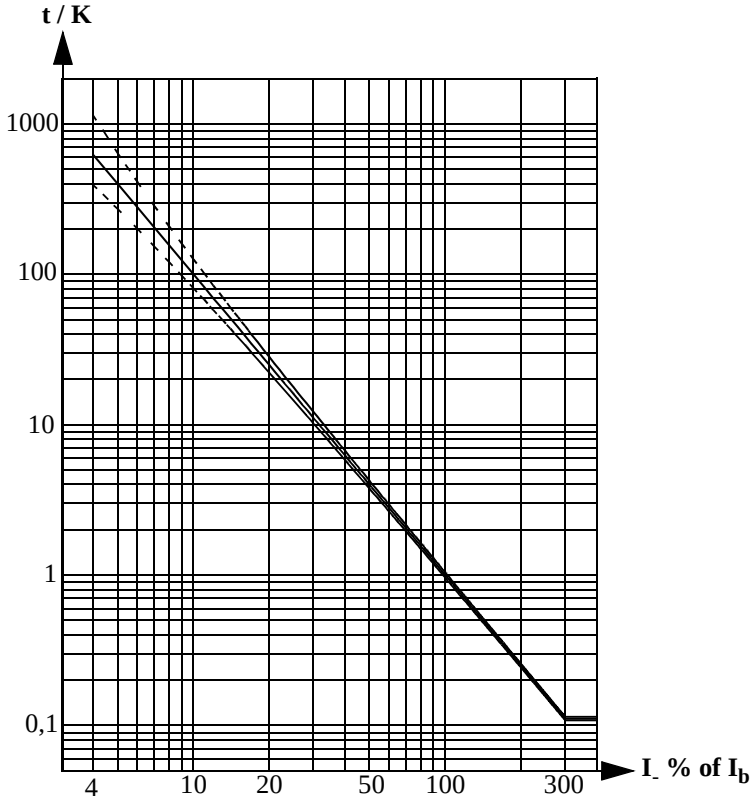

Fig. 2 Inverse time characteristic for the RXIIK 4 relay.

2.3 Configuration

The relay is provided with one Alarm level and one Start level. The Alarm function has a definite time delay and the Start function has an inverse or a definite time delay. The relay is also provided with two groups of settings for each level, the relay can change active group during normal service.

There are two binary inputs which are galvanically separated from the electronics with opto-couplers. The binary inputs can flexible be configured in the HMI.

There are five binary outputs, with change over contacts. The binary outputs can flexible be configured in the HMI. A function can be configured to more than one binary output.

2.4 Self test

The processors executes a self test sequence when initiated. If any of the processors fails to start in a proper way the HMI-display or the LED's will give an indication according to Fig. 3. The program in the microprocessors is executed in a fixed loop with a constant looptime of 6 ms.

The loop is supervised by an internal watch dog which initiates a program restart if the program malfunctions.

Test sequence:	Test error indication:
Communication error	"E ain" is presented in the display.
ROM	Green and Yellow LEDs are flashing.
RAM	Green and Red LEDs are flashing.

Fig. 3 Self test error indication of the RXIIK 4 relay.

2.5 Connecting

When connecting RXIIK 4 to the supply voltage, the relay performs a self test. The green "In service" LED will light-up when the relay is ready for operation. In case of a fault, the LEDs will start flashing or an error message will be presented in the display according to Fig. 3.

3 Design

The negative sequence overcurrent protection type RAIIK 400 is designed for generator or motor protection applications. The protection is available with or without test switch RTXP 18, DC-DC converter RXTUG 22H and tripping relay RXME 18.

All the protections in the COMBIFLEX® modular system are mounted on apparatus bars. The connections to the protections are done by COMBIFLEX® socket equipped leads.

The type of modules and their physical position and the modular size of the protection are shown in the *Buyer´s Guide* and in the Circuit Diagram of the respective protection. The following modules can be included.

3.1 Test switch

The test switch RTXP 18 is a part of the COMBITEST testing system described in the *Buyer´s Guide*, document No. 1MRK 512 001-BEN. A complete secondary testing of the protection can be performed by using a test-plug handle RTXH 18, connected to a test set. When the test-plug handle is inserted into the test switch, preparations for testing are automatically carried out in a proper sequence, i.e. blocking of tripping circuits, short-circuiting of current circuits, opening of voltage circuits. This makes the protection available for secondary testing. Test switch RTXP 18 has the modular dimensions 4U 6C.

All input currents can be measured by a test plug RTXM connected to an ammeter. The tripping circuits can be blocked by a trip-block plug RTXB and the protection can be totally blocked by a block-plug handle RTXF 18.

3.2 DC-DC converter

The DC-DC converter RXTUG 22H converts the station battery voltage to an alternating voltage which is then transformed, rectified, smoothed and in this application regulated to ±24V DC. The auxiliary voltage is in that way adapted to the measuring relay. The input and output voltages are galvanically separated, which contributes to damping of possible transients in the auxiliary voltage supply to the measuring relay. The converter has a built-in signal relay and a green LED for supervision of the output voltage.

RXTUG 22H has the modular dimensions 4U 6C. It is described in the *Buyer´s Guide*, document No. 1MRK 513 001-BEN.

3.3 Measuring relay

The negative sequence overcurrent relay RXIIK 4 is a static, microprocessor-based relay with three input current transformers for galvanic isolation. All settings of the relay will be done in the HMI and presented in the display. The relay is provided with three LEDs one for start, one for trip and one in service. The relay is provided with two binary inputs and five binary outputs, the binary inputs are galvanically separated from the electronics with opto-couplers. The binary outputs has change over contacts.

The RXIIK 4 has the modular dimensions 4U 12C.

3.4 Tripping relay

The auxiliary relay RXME 18 is used as a tripping relay. It has two heavy duty make contacts and a red flag. The flag will be visible when the armature picks up and is manually reset by a knob in the front of the relay. Typical operate time is 35 ms.

RXME 18 has the modular dimensions 2U 6C. The relay is described in the *Buyer´s Guide*, document No. 1MRK 508 015-BEN.

4 Settings

The setting of the relay can be done from the HMI as follows:

4.1 Human-Machine-Interface (HMI)

The built-in human machine interface (HMI) provides local communication between the user and the relay. The HMI module includes three light emitting diodes (LED), a graphic LCD-display and six push-buttons.

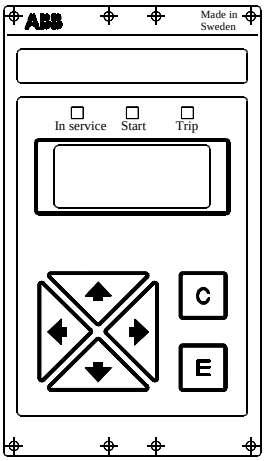

Fig. 4 Front layout of the RXIIK 4 relay.

The LEDs on the HMI provides the primary status information of the relay and the display provides more detailed information. The HMI is also used for relay configuration, service value and event records.

4.2 LED indication

Green LED: The operating condition of the relay is normal.

Yellow LED: Indicates Start and can be configured in HMI to be latched or not.

Red LED: Indicates Trip and can be configured in HMI to be latched or not.

4.3 Graphic LCD-display

The graphic liquid crystal display (LCD) provides primary status information of the relay. It is normally dark. The display turns-off automatically after leaving the menu tree or after approximately 30 minutes since any button has been selected. This function can be selected to be ON or OFF.

4.4 Push-buttons

The number of buttons used on the HMI module is reduced to the minimum acceptable amount to make communication as simple as possible for the user. The buttons normally have more than one function, depending on where they are used in the menu tree.

All buttons have one function in common: when the display is in idle (dark, non activate) mode, selecting any of them results in activation of the display.

Push-button functions:

C button:	Move upwards in menu tree. Turn-off display at main menu.
E button:	Confirm choices in menu. Move downwards in menu tree.
← **Left arrow:**	Move left in dialog boxes and editable menus. Move upwards in menu tree. Turn-off display at main menu.
→ **Right arrow:**	Move right in dialog boxes and editable menus. Move downwards in menu tree.
↑ **Up arrow:**	Move upwards in specific menu. Increase editable values. Toggle choice in dialog box and configuration.
↓ **Down arrow:**	Move downwards in specific menu. Decrease editable values. Toggle choice in dialog box and configuration.

4.5 Menu tree

The menu tree for the relay described below, contains these main menus:

- Indications
- Service values
- Settings
- Configuration
- HMI
- Lang/Språk *
- Information
- Test

* Compulsory language English “Lang” and one option language e.i. Swedish “Språk”.

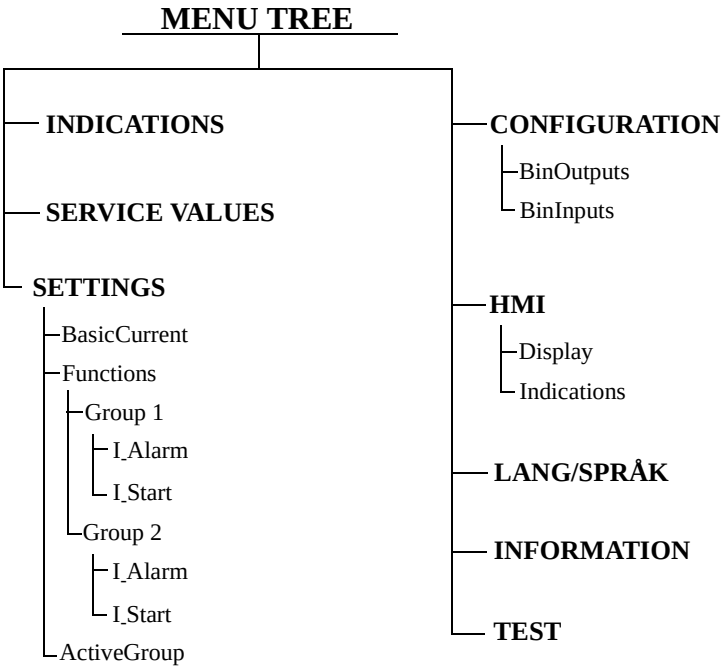

4.6 Menu window

The menu window presents the paths and the menus in the relay.

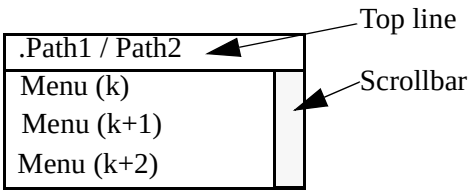

Row one, Top line:

- If the path will show more than two levels a dot will appear at the beginning of the row.
- Path1 displays the name of the previous menu.
- Path2 displays the name of the active menu window.

The path will not appear in the following menus:

- Indications menu
- Service values menu
- Binary output and Binary input under Configuration menu.

Row two, three and four:

- Menus k, k+1 and k+2 appear in the three bottom rows.
- When the cursor highlights one of the rows, it indicates the path that you can activate by selecting the right arrow or the E button.

When more than four rows are available a scrollbar appears at the right-side which indicates were the cursor is. To change the active path within the menu tree select the up or down arrow button.

4.7 Saving dialogue

The saving dialogue will appear when you are going upwards in the menu tree from a menu which consists of editable values or configurations. The saving dialogue window lets you choose a command YES, NO or CANCEL, by using the left or right arrow; confirm with the E button.

```
Save
Previous Menu?

YES   NO   CANCEL
```

- YES: Confirm the last setting(s) and exit.
- NO: Confirm the previous setting(s) without any changes and exit.
- CANCEL: Returns to the last setting(s) or to the last menu.

4.8 Indications menu

This menu provides more information about the event records.

Indications:	Start	Trip	Descriptions: (On front plate)
I_Alarm		☐1/2	Shows status of function and active group.
I_Start	☐1/2	☐1/2	Shows status of function and active group.
Block		☐1/2	Shows status of function and active group.

The appearance of the boxes describes the status of the function:

Filled	Latest recorded event.
Greyed	Previous recorded event.
Blank	No recorded event (since last clearing).

The number 1 or 2 above, indicates the setting group which was active during the events.

The LEDs on the front are connected to I_Start function.

The indication menu can be presented in two different ways:

1) New disturbance has occurred.
2) No new disturbance has occurred.

1. New disturbance has occurred:
The indication menu will appear in two steps; step 1, a window will show status of the function and active group, step 2, by pressing any button a clearing dialogue box will appear.

Press the C button shortly and the dialogue returns to main menu.
Press and hold down the C button for 2 seconds to CLEAR saved values and LEDs. The dialogue box will return to main menu.

2. No new disturbance has occurred:
The window shows status of function and active group; by pressing any button the dialogue returns to main menu.

Indication menu with the plastic cover on.
The indication menu can be checked during normal service, by pressing the “C” button. If a disturbance has occured, the indications can be read in the following five steps:

Step 1: Window shows status of the function and active group.
Step 2: Next pressing the window will show the clearing dialogue box if the recorded disturbances will be cleared or not.
Step 3: Next pressing the window will show the first four service values (I_, IL1, IL2, IL3).
Step 4: Next pressing the window will show the remaining service values (Θ, Block, Freq.).
Step 5: Next pressing will turn-off the display.

If no disturbance has been recorded the service value menu will appear. For more information see Service values menu below.

4.9 Service values menu

This menu provides information on the operating conditions.

Service values:	Provides information about:
I_:	The actual measured negative sequence current.
IL1:	The actual measured phase-1 current.
IL2:	The actual measured phase-2 current.
IL3:	The actual measured phase-3 current.
Θ:	The actual heat content in the thermal memory.
Block:	Remaining block time before reset.
Freq:	The actual measured frequency.

The service values will appear in three steps: step 1, four values will be shown. Step 2, by pressing any button, the remaining 3 values will appear. Step 3, press any button to revert to main menu.

Service value menu with the plastic cover on.
The service value can be checked during normal service, by pressing the “C” button. If a disturbance is recorded the indication menu will appear. For more information see Indications menu.

4.10 Settings menu

The following sub-menus are available under the settings menu:

- Basic current
- Functions
- Active group

4.11 Basic current menu

Use this menu to set the basic current.

Command:	Let you...
I_b:	Set basic current level. Adaptation between rated relay current and the rated generator or motor current. (See chapter Technical data for setting range).

Leaving this menu a save dialogue box will appear to confirm the settings.

4.12 Functions menu

The following sub-menus are provided under the functions menu:

- Group 1
- Group 2

The sub-menus Group 1 and 2 have the same structure.

4.13 Group menus

The following sub-menus are provided under Group1 and Group2 menus:

- I_Alarm
- I_Start

4.14 I_Alarm menu

Use this menu to set the I_Alarm level and the other parameters.

Command:	**Let you...**
I_:	Select active or not.
I_:	Set alarm level.
Time:	Set the definite time delay.
	(See chapter Technical data for setting ranges).

Leaving this menu a save dialogue box will appear to confirm the settings. A special function is included in this dialogue;
With up or down arrow it can be selected to which group 1 or 2, the settings will be saved.

4.15 I_Start menu

Use this menu to set the I_Start level and the other parameters.

Command:	**Let you...**
I_:	Select active or not.
I_:	Set start level.
Char:	Select time characteristic, inverse or definite.
KValue:	Set inverse time constant.
Time:	Set definite time delay.
ResetT:	Set reset time for the trip output.
CoolT:	Set thermal cooling down time.
BlockT:	Set reset time for the block function.
	(See chapter Technical data for setting ranges).

Leaving this menu a save dialogue box will appear to confirm the settings. A special function is included in this dialogue;
With up or down arrow it can be selected to which group 1 or 2, the settings will be saved.

4.16 Active Group menu

Use this menu to select active group.

Command:	**Let you...**
Active group:	Select active Group1 or Group2.

Leaving this menu a save dialogue box will appear to confirm the choice.

4.17 Configuration menu

Under this menu the I/O signals will be configured. The following sub-menus are:

- Binary outputs
- Binary inputs

Command:	**Let you...**
BinaryOutputs	Mark binary output(s) to selected function.
I_Alarm:	Active signal when I_Alarm operates.
I_Start:	Active signal when I_Start operates.
I_Trip:	Active signal when I_Trip operates.
Block:	Active signal when Block operates.
Grp2Act:	Active signal when Group2 is selected.
In Serv:	Active signal when relay is in normal service.
BinaryInputs	Mark binary input(s) to selected function.
LEDReset:	Active signal reset LED and indications.
ChActGrp:	Active signal change active group.
I_AlBlock/Enable:	Set Block or Enable for I_Alarm, active signal blocks or enables.
I_StBlock/Enable:	Set Block or Enable for I_Start, active signal blocks or enables.
I_TrBlock/Enable:	Set Block or Enable for I_Trip, active signal blocks or enables.
TimerReset:	Active signal reset internal timer for thermal content.

Leaving the configuration menu a save dialogue box will appear to confirm the settings.

4.18 HMI menu

Under this menu the outlook for the display, will be selected. The following sub-menus are provided:

- Display
- Indications

Command:	**Let you...**
Display	
Contrast:	Set the display contrast, setting range 0-100%
Show:	Select display time-out (30 minutes) or not.
Indications	
Start:	Select Start LED to be latched or unlatched.
Trip:	Select Trip LED to be latched or unlatched.

Leaving the HMI menu a save dialogue box will appear to confirm the settings.

4.19 Lang/Språk menu

Use this menu to select language.

Command:	**Let you...**
Language:	Select language.

*) Compulsory language English and one option language e.g Swedish.

Leaving this menu a save dialogue box will appear to confirm the choice.

4.20 Information menu

Use this menu to retrieve information about the relay.

Information:	**Description:**
1MRK XXXXXX-XXX	Ordering number of the relay.
VerNo: X.X-X	Version number of the relay.
SerNo: PXXXXXX	Serial number of the relay.
I_r = XA	Rated current of the relay.

4.21 Test menu

Use this menu to test the I/O signals before installation of the relay.

Command		**Let you...**
BinOut:	1 2 3 4 5	Verify the triggering of selected output, (relay) by pressing the E button.
BinIn:	□1 □2	Verify the binary input signal, the box is shadowed when input is energized.

4.22 ESD

The relay contains electronic circuits which can be damage if exposed to static electricity. Always avoid to touch the circuit board when the relay cover is removed during the setting procedure.

5 Connection

RXIIK 4 relay requires a DC/DC converter type RXTUG 22H for the auxiliary voltage supply ±24V. Connection of voltage RL shall be made only when the binary inputs are used.
The relay is delivered with 3 short-circuiting connectors RTXK for mounting on the rear of the terminal base. The connectors will automatically short-circuit the current input when the relay is removed from the terminal base.

Note! The auxiliary voltage supply should be interrupted or the output circuits should be blocked to avoid the risk of unwanted alarm or tripping, before the relay is plugged into or withdrawn from its terminalbase.

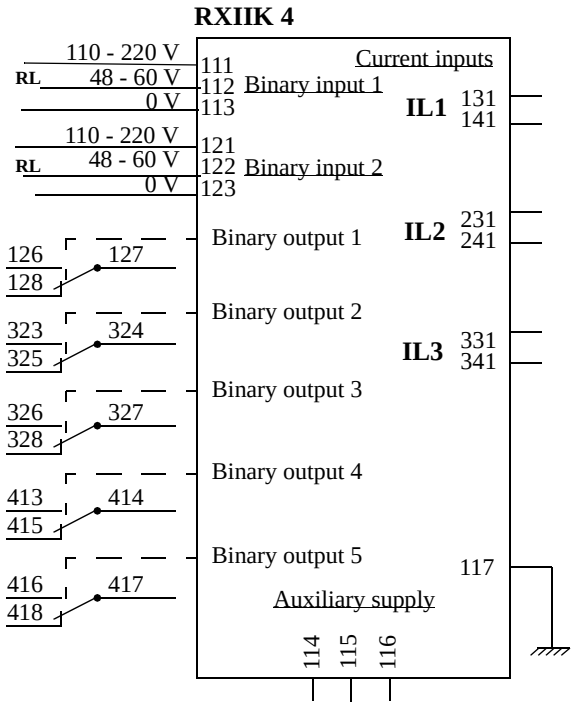

Fig. 5 Terminal diagram

6 Technical data for RXIIK 4

Table 1: Current inputs

Rated current I_r	1, 2 or 5 A
Basic Current I_b	(0,4 - 1,2) x I_r
Effective current range	(0,03 - 5,0) x I_b
Rated frequency f_r Frequency range	50 / 60 Hz 40 - 70 Hz (outside relay set I_ to 0%)
Power consumption, per phase at rated current I_r = 1 A I_r = 2 A I_r = 5 A	 <30 mVA <60 mVA <150 mVA
Overload capacity for current inputs I_r = 1 A continuously I_r = 2 A continuously I_r = 5 A continuously I_r = 1 A during 1 s I_r = 2 A during 1 s I_r = 5 A during 1 s	 4 A 8 A 20 A 100 A 200 A 350 A (Max 350A AC for COMBIFLEX)

Table 2: Negative sequence overcurrent functions

Function	**I_Alarm**	**I_Start**
Setting range	(3 - 30%) of I_b	(4 - 40%) of I_b
Limiting error for current measuring	Range: 0 - 40% <±1% equivalent I_ Range: 40 - 300% <±4% equivalent I_	
Consistency of set operate value	<±0,2% equivalent I_	
Typical reset ratio	0,5% equivalent I_	
Operate time	<150 ms	
Reset time	<130 ms	
Overshoot time	25 ms	
Recovery time	<130 ms	
Frequency dependence within frequency range 40- 70 Hz	<±4% equivalent I_	
Temperature dependence within range -5°C to +55°C	<±1% equivalent I_	

Table 3: Time functions for I_Alarm

Time function	**I_Alarm**
Time delay	Definite time
Setting range, definite time	0 - 100 s
Accuracy, definite time	<±0,2% of set time (for settings ≠ 0s)

Table 4: Time functions for I_Trip

Time function	I_Trip (initialized by I_Start)
Time delay	Inverse or definite time
Setting range, definite time	0 - 100 min
Setting range, inverse time formula	K = 0 - 100 s $t = K \times (I_b / I_-)^2$
Reset time delay (for trip relay only)	0 - 5 s
Cooling down time	0 - 200 min
Block time	10 - 90% of cooling down time
Accuracy, definite time	<±0,2% of set time (for settings ≠ 0 min)
Accuracy, inverse time	$\pm(1+(I_-/I_b))$% equivalent I_- and ±200ms

Table 5: Auxiliary DC voltage supply

Auxiliary voltage EL for RXTUG 22H Auxiliary voltage for the relay	24 - 250 V DC, ±20% ±24 V (from RXTUG 22H)
Power consumption at RXTUG 22H input 24-250 V before operation after operation without RXTUG 22H ±24 V before operation after operation Power consumption, back-light.	 < 6,0 W (Back-light off, no output relays act.) < 7,5 W (Back-light off, output relays act.) < 3,5 W (Back-light off, no output relays act.) < 5,0 W (Back-light off, output relays act.) Approximately 2 W

Table 6: Binary inputs

Binary input voltage RL		48-60 V and 110-220 V DC, -20% to +10%
Power consumption	48-60 V	< 0,3 W / input
	110-220 V	< 1,5 W / input

Table 7: Output relays

Contacts		5 change-over
Maximum system voltage		250 V AC / DC
Current carrying capacity continuous during 1 s		 5 A 15 A
Making capacity at inductive load with L/R >10 ms during 200 ms during 1 s		 30 A 10 A
Breaking capacity - AC, max. 250 V, cos φ > 0,4 - DC, with L/R < 40 ms,	 48 V 110 V 220 V 250 V	 8 A 1 A 0,4 A 0,2 A 0,15 A

Table 8: Electromagnetic compatibility (EMC), immunity tests

All tests are performed together with the DC/DC-converter, RXTUG 22H

Test	Severity	Standard
Surge	1 and 2 kV, normal service 2 and 4 kV, withstand test	IEC 61000-4-5, class 3 IEC 61000-4-5, class 4
AC injection	500 V AC	SS 436 15 03, PL 4
Power frequency magnetic field	1000 A/m	IEC 61000-4-8
1 MHz burst	2,5 kV	IEC 60255-22-1, class 3
Spark	4-8 kV	SS 436 15 03, PL 4
Fast transient	4 kV	IEC 60255-22-4, class 4
Electrostatic discharge In normal service with cover on	 6 kV (contact) 8 kV (air) 6 kV, indirect application	 IEC 60255-22-2, class 3 IEC 60255-22-2, class 3 IEC 61000-4-2, class 3
Radiated electromagnetic field	10 V/m, 80-1000 MHz	IEC 61000-4-3, Level 3
Radiated pulse electromag. field	10 V/m, 900 MHz	ENV 50204
Conducted electromagnetic	10 V, 0,15-80 MHz	IEC 61000-4-6, Level 3
Interruptions in auxiliary voltage 24 VDC, no reset for interruptions 110 VDC 250 VDC	2 - 200 ms < 20 ms < 70 ms < 300 ms	IEC 60255-11

Table 9: Electromagnetic compatibility (EMC), emission tests

Test	Severity	Standard
Conducted	0,15-30 MHz, class A	EN 50081- 2
Radiated	30-1000 MHz, class A	EN 50081- 2

Table 10: Insulation tests

Test	Severity	Standard
Dielectric Current circuit to circuit and current circuit to earth Circuit to circuit and circuit to earth Over open contact	 2,5 kV AC, 1 min 2,0 kV AC, 1 min 1,0 kV AC, 1 min	 IEC 60255-5
Impulse voltage	5 kV, 1,2/50 µs, 0,5 J	IEC 60255-5
Insulation resistance	> 100 MΩ at 500 V DC	IEC 60255-5

Table 11: Mechanical tests

Test	Severity		Standard
Vibration	Response	1,0 g, 10-150-10 Hz	IEC 60255-21-1, class 2
	Endurance:	1,0 g, 10-150-10 Hz, 20 sweeps	IEC 60255-21-1, class 1
Shock	Response:	5 g, 11 ms, 3 pulses	IEC 60255-21-2, class 1
	Withstand:	15 g, 11 ms, 3 pulses	
Bump	Withstand:	10 g, 16 ms, 1000 pulses	IEC 60255-21-2, class 1
Seismic	X-axis:	3,0 g, 1-50-1 Hz	IEC 60255-21-3, class 2, extended (Method A)
	Y-axis:	3,0 g, 1-50-1 Hz	
	Z-axis:	2,0 g, 1-50-1 Hz	

Table 12: Temperature range

Storage	-20 °C to +70 °C
Permitted ambient temperature	-5 °C to +55 °C

Table 13: Weight and dimensions

Equipment	Weight	Height	Width
RXIIK 4 without RXTUG 22H	Approximately1,3kg	4U	12C

7 Receiving, Handling and Storage

7.1 Receiving and Handling

Remove the protection package from the transport case and make a visual inspection for transport damages. Check that all screws are firmly tightened and all relay elements are securely fastened.

Check that all units are included in accordance with the apparatus list.

Normal ESD (Electrostatic Discharge) precautions for microprocessor relays should be observed when handling the relays.

7.2 Storage

If the protection package is to be stored before installation, this must be done in a dry and dust-free place, preferably in the original transport case.

8 Installation, Testing and Commissioning

8.1 Installation

The relays and the RXTUG 22H DC-DC converter are plugged into COMBIFLEX® terminal bases type RX 4 or RX 2H. The terminal bases and the RTXP test switch, when included, are fixed on apparatus bars to make up the protection assembly.

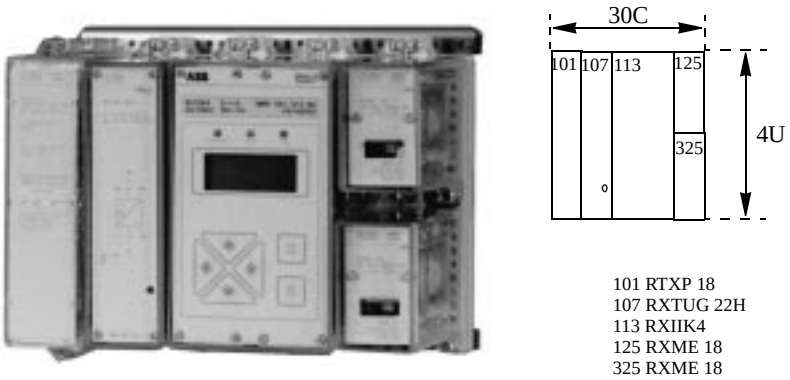

Fig. 6 RAIIK 400 negative sequence overcurrent protection, acc. to Circuit diagram 1MRK 001 089-CA

The protection assembly can be mounted in the following ways:

- on apparatus bars
- in a 19” equipment frame
- in RHGX case
- in RHGS case

The height and width of the protection assembly are given in the circuit diagram with height (U) and width (C) modules, where U = 44,45 mm and C = 7 mm. The depth of the protection assembly, including space for the connection wires, is approximately 200 mm.

All internal connections are made and the protection assembly is tested before delivery from factory.

Equipment frames and relay cases.
Detailed information on the COMBIFLEX® connection and installation components is given in Catalogue 1MRK 513 003-BEN. Information on the relay mounting system is given in Catalogue 1MRK 514 001-BEN.

RHGS 30

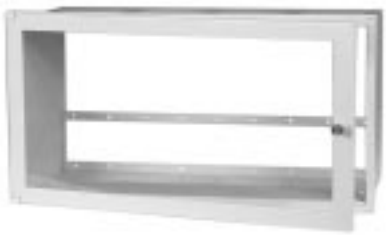

(SE970103)

Fig. 7 RHGS case

RHGS cases for 19” cubicle mounting or surface mounting
This type of case can be used for all common ways of mounting. The RHGS cases are available in three different sizes, which can be combined with mounting accessories to get maximum flexibility. The cases can also be combined together with the protections in the 500 range.

RHGX 8

(SE81702)

Fig. 8 RHGX case

RHGX cases for flush- or semi-flush panel mounting
The RHGX cases are available in five sizes. The case, a metal box open at the back, has a flange (with a rubber sealing strip) at the front which acts as a stop when the case is inserted into a front panel opening. At the front of the case there is a door with a window and a rubber seal.

Size: 4U 19”

(SE96399)

Fig. 9 19” equipment frame

19” equipment frames
These types of equipment frames are used for cubicle mounting or panel mounting of plug-in units in the COMBIFLEX® range. The frames are available in 3 sizes:

4U (17” x 19”)
8U (14” x 19”)
12U (21” x 19”)

for mounting 20, 40 and 60 module seats respectively.

Connections

The external connections (dotted lines on the terminal and circuit diagrams) are made with leads with 20 A COMBIFLEX® sockets to the RTXP 18 test switch and with 10 A sockets to the relay terminal bases.

Each unit in the protection assembly has a unique item designation. The item designations are based on a coordinate system of U and C modules, where the first figure stands for the U module position starting from the top and the next two figures stand for the C module position, starting from the left-hand side - seen from the front side of the protection assembly. The RTXP test switch in Fig. 10 has item designation 101, where the first figure stands for the U module position and the next two figures stand for the C module designation.

The terminal designations include the item designation number of the unit followed by the terminal number marked on the rear of the terminal socket.

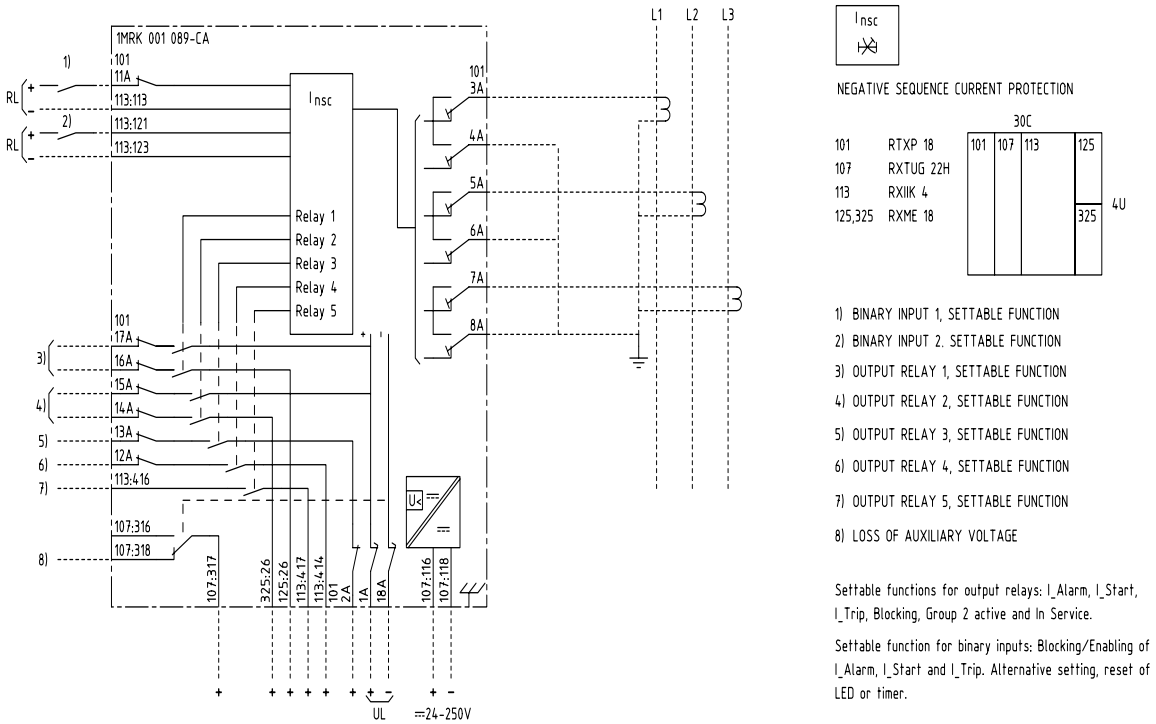

Fig. 10 Terminal diagram 1MRK 001 089-CAA

For plug-in units size 2H an additional figure 1 or 3 defines if the terminal is in the upper resp. lower part of the assembly. Compare terminal designations 107:118 and 107:318 in Fig. 11.

Fig. 11 shows the rear of protection assembly RAIIK 400, Order No. 1MRK 001 089-CA. The position of the terminals, which are used for external connections according to connection diagram 1MRK 001 089-CAA, is shown.

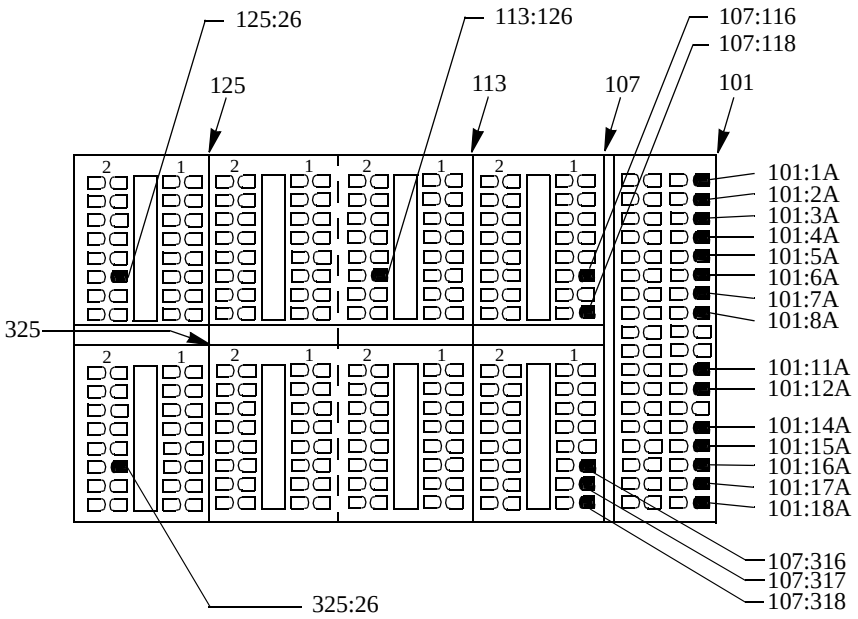

Fig. 11 Location of the terminals shown on diagram 1MRK 001 089-CAA

8.2 Testing

8.2.1 Secondary injection test

The standard relays (Order No's 1MRK 001 089-BA and -CA) are provided with the COMBITEST test switch type RTXP 18.

When the test-plug handle RTXP 18 is inserted in the test switch, preparations for testing are automatically carried out in the proper sequence, i.e. blocking of tripping circuits, short-circuiting of CT's thus making relay terminals accessible for testing.

When the test handle is in the intermediate position, only the tripping circuits are opened. When the test handle is fully inserted, the relay is completely disconnected from the instrument transformers and ready for secondary injection testing. Terminals 1 and 18 (DC supply) are not opened when the test plug handle is inserted.

Relays which are not provided with test switch have to be tested in the proper way from external circuit terminals.

Suitable test equipment:

- Test equipment e.g SVERKER or similar
- Multimeter or ammeter, Class 0,5 or better
- RTXH 18 test plug with test leads

Fig. 12 shows as an example, the connection of test equipment for secondary testing of the negative sequence overcurrent protection RAIIK 400, Connection Diagram 1MRK 001 089-CA. When testing, the actual circuit diagram of the protection, should be available.

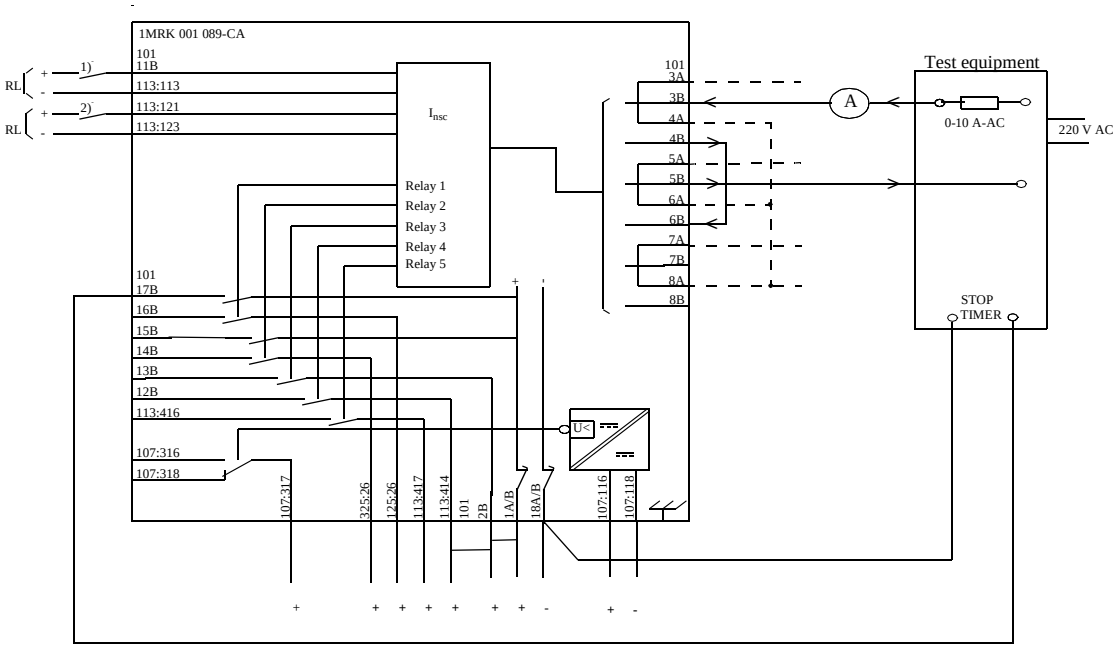

Fig. 12 Connection of test apparatus to RAIIK 400 for testing of the negative sequence overcurrent function.
Test handle RTXH 18 inserted.

For the secondary injection test, a current corresponding to the two phase short-circuit condition is normally used because it is normally difficult to obtain pure negative sequence current, i.e. phase currents with exactly same magnitude, reversed sequence and exactly 120° phase displaced.

A two phase short-circuit gives a negative sequence current of a magnitude:

magnitude: $\left(\frac{1}{\sqrt{3}}\right)$ x *fault current*.

1. Connections: Insert the test-plug handle in to the test switch. Connect the test set and ammeter according to Fig. 12. Check that auxiliary voltage is connected to terminal 101:1A and 101:18A. Interconnect terminals 1 and 2 on the test handle and also to 113:414 to get output voltage to test terminal 12 and 13.

2. Settings: Make a desire setting for the relay with the HMI, operate levels, time delays and I/O signals for binary inputs and outputs. Select the binary input 1 for Reset LED and input 2 for Reset timer. Select the binary output 1 for I_Alarm, output 2 for I_Start, output 3 for I_Trip and output 4 for Block function. Select the indication LEDs to be latched.

3. Function test of I_Alarm: Connect the timer stop wire to terminal 17. Set the time delay to 0s and slowly increase the amplitude until the I_ Alarm function operates, check indication in HMI. Compare the calculated I_ value to the presented I_ value in the HMI, check also the reset value.

4. Function test of I_Start: Connect the timer stop wire to terminal 15. Slowly increase the amplitude until the I_Start function operates, check the indication in HMI. After the set time delay for I_Trip expired the function operates, check indication in HMI. Compare the calculated I_ value to the presented I_ value in the HMI, check also the reset value.

Verify also test 3 and 4 for phases IL1-IL3 and IL2-IL3 in the same way as described above for phase IL1-IL2.

5. Operate time I_Alarm: Connect the timer stop wire to terminal 17. Check the operate time with a injected current equal to set basic current.

6. Operate time I_Trip: Connect the timer stop wire to terminal 13. Check the operate time with a injected current equal to set basic current.
If inverse time is selected at least two more points on the operating characteristic should be checked. Before each measurement, the thermal heat memory in the relay must be emptied, use the binary input 2 for reset timer.

Injected current: $I = I_b$	I_ ≈ 58%	Operate time: t ≈ 3 x set K
Injected current: $I = 0,5 \times I_b$	I_ ≈ 29%	Operate time: t ≈ 12 x set K
Injected current: $I = \sqrt{3} \times I_b$	I_ ≈ 100%	Operate time: t ≈ set K

7. Cooling down time: Connect the timer stop wire to terminal 12. Switch of the injected current when the I_Trip function operates and record the time which elapsed until the blocking relay resets. Use the binary input 2 to reset timer to zero.

8. Binary input 1: Check the binary input 1 by connecting voltage +RL to test terminal 11 and -RL to terminal 113:113.

9. Binary input 2: Check the binary input 2 by connecting voltage +RL to terminal 113:121 and -RL to terminal 113:123.

10. Finally check that: All indications are cleared in the HMI, LED's and flags are reset. Remove the test handle and mount the plastic cover.

8.2.2 Primary test

Check the service values for the three phases in the HMI, all service values shall correspond to the primary values.

Check that no operation of the alarm or the start relay is obtained when the generator is delivering 20 percentage or more of rated current.
If the negative sequence current is higher than a few percentage of basic current it normally indicates a wrong phase sequence which has to be reconnected.

Make a short-circuit between two phases on the generator line side and adjust the field current to give a short-circuit current I_{SC} of 50-60 percentage of rated generator current.

Check that RXIIK 4 operates after a time corresponding to the formula:

$$t = 3 \times \left(\frac{I_b}{I_{sc}}\right)^2 \times K$$

Note: **If the generator is not tripped by the relay after the calculated time, it must be immediately tripped by hand to avoid damage on the generator.**

If, for some reason, a two phase short-circuit test can not be made, a primary test can be performed by short-circuiting phase IL1 (R) to neutral outside the relay and opening up the current circuit to the relay by inserting an ammeter test plug without instrument in terminal 3 of the test switch pos.101.

In this way, a negative sequence current equal to 1/3 of the phase current is produced when the generator is delivering a symmetrical load current.
The generator load current must therefore be rather high if tripping should be obtained within a reasonable time.

Finally check that:

- All the indications are cleared in HMI menu.
- LEDs and flags are reseted.
- The plastic cover is mounted.

8.3 Commissioning

The commissioning work includes a check of all external circuits connected to the protection and a check of the current ratio for the current transformers.

The DC circuits and tripping circuits should be checked, including operation of the circuit-breaker(s).

9 Maintenance

Under normal conditions, the negative sequence overcurrent protection requires no special maintenance. The covers should be mounted correctly in position.

In exceptional cases, burned contacts on the output relays can be dressed with a diamond file.

Under normal operating conditions and when the surrounding atmosphere is of non-corrosive nature, it is recommended that the relays be routine tested every four to five years.

10 Circuit and terminal diags.

The table below shows the different variants of the negative sequence overcurrent protection type RAIIK 400.

Type	Test-switch	DC-DC converter	Tripping relays	Ordering No. 1MRK 001	Circuit Diagram 1MRK 001	Terminal diagram 1MRK 001	Diagram
RAIIK 400		x		089-AA	089-AA	089-AAA	On request
RAIIK 400	RXTP18	x		089-BA	089-BA	089-BAA	On request
RAIIK 400	RXTP18	x	2 RXME 18	089-CA	089-CA	089-CAA	Fig. 13 -14

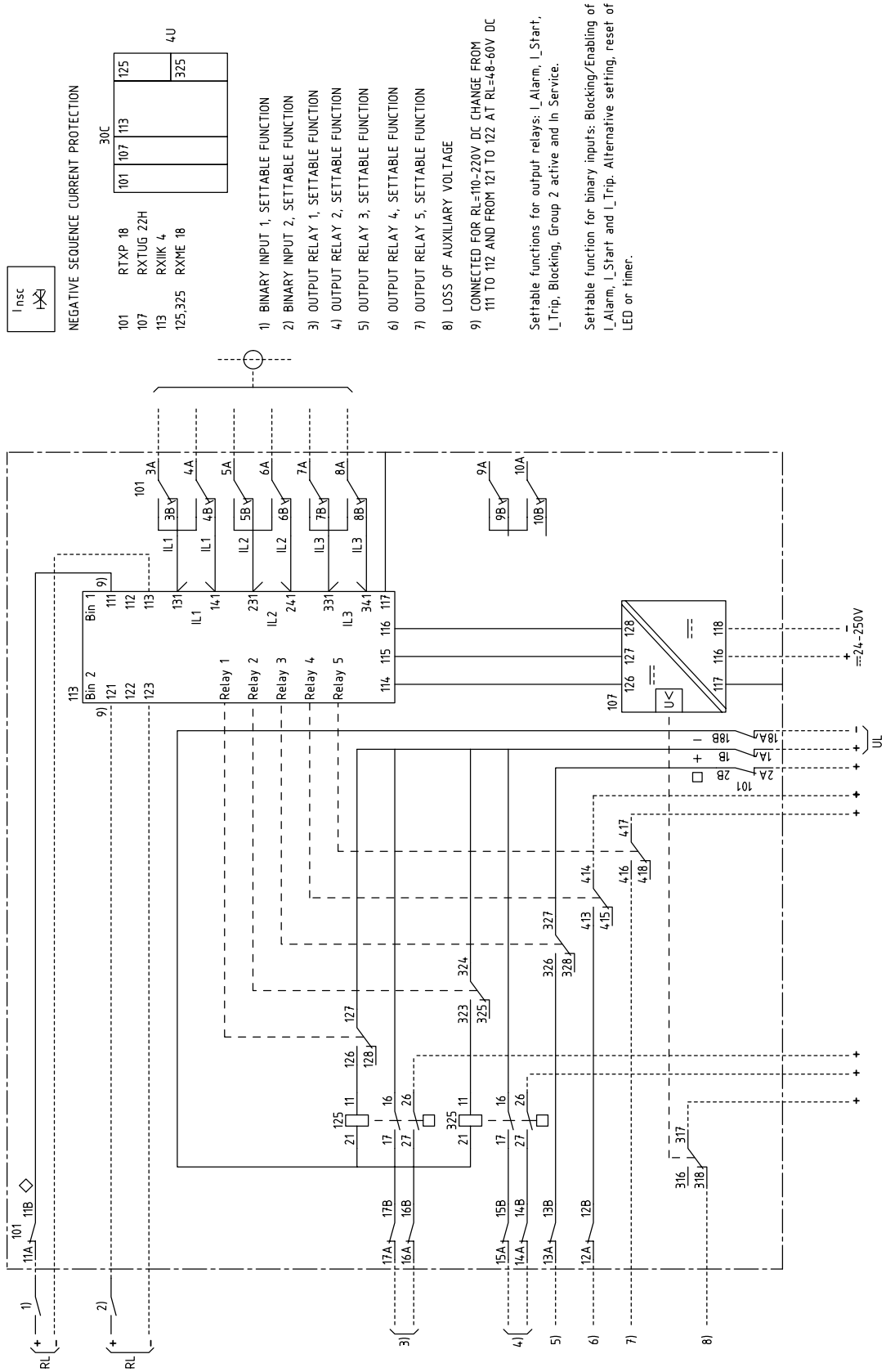

Fig. 13 Circuit diagram 1MRK 001 089-CA

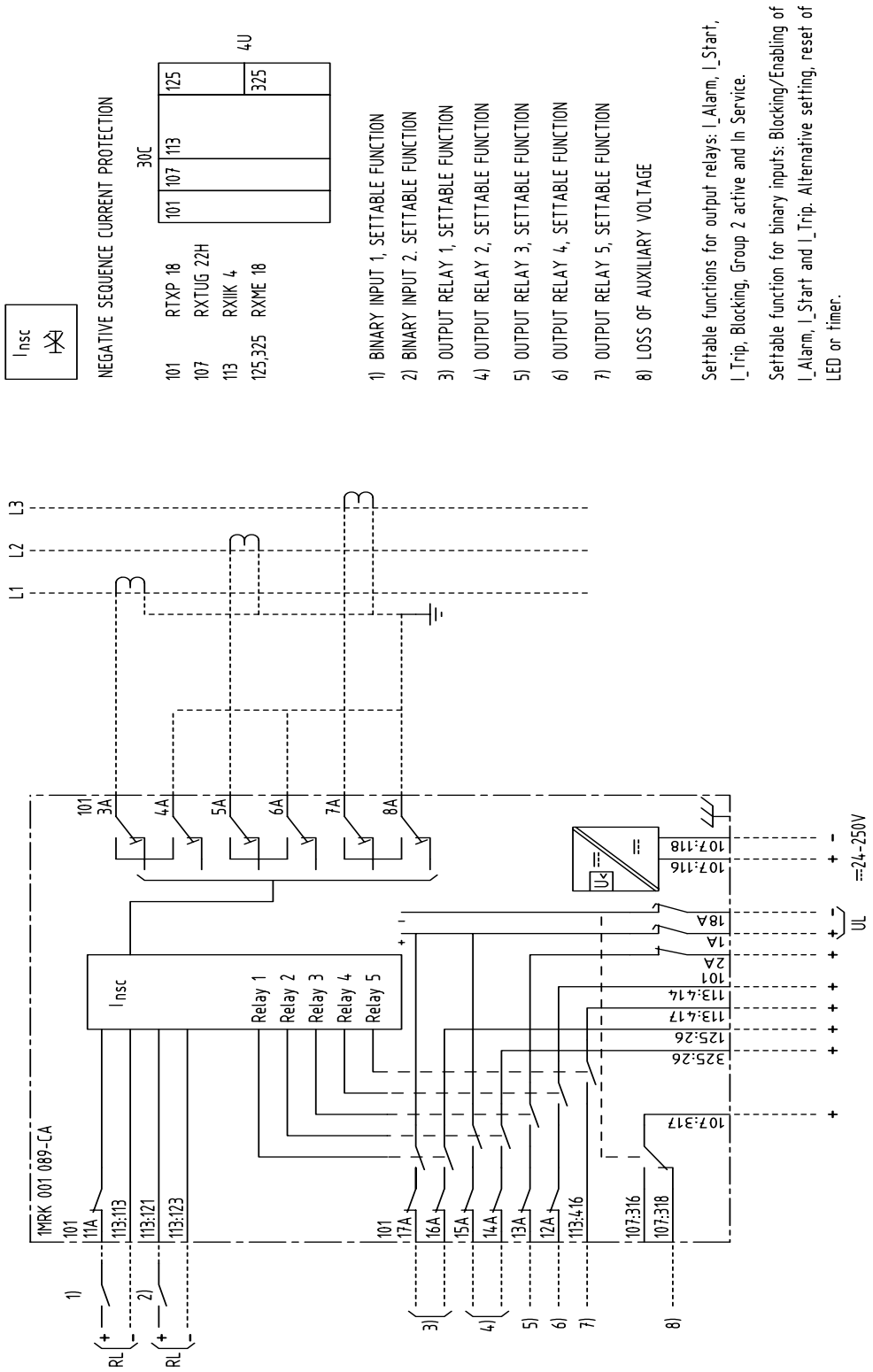

Fig. 14 Terminal diagram 1MRK 001 089-CAA

ABB Network Partner AB
S-721 71 Västerås
Sweden
Tel +46 21 321300
Fax +46 21 146918