We reserve all rights in this document and in the information contained therein. Reproduction, use or disclosure to third parties without express authority is strictly forbidden. Copr. ABB AB

Table of contents

Part of product	Sheet
Designations for 1/2x19" casing with 1 TRM slot	2
Power supply module	3
Transformer input module	4
Binary input module	5
Binary output module	6

We reserve all rights in this document and in the information contained therein. Reproduction, use or disclosure to third parties without express authority is strictly forbidden. Copr. ABB AB

Designations for 1/2x19" casing with 1 TRM slot

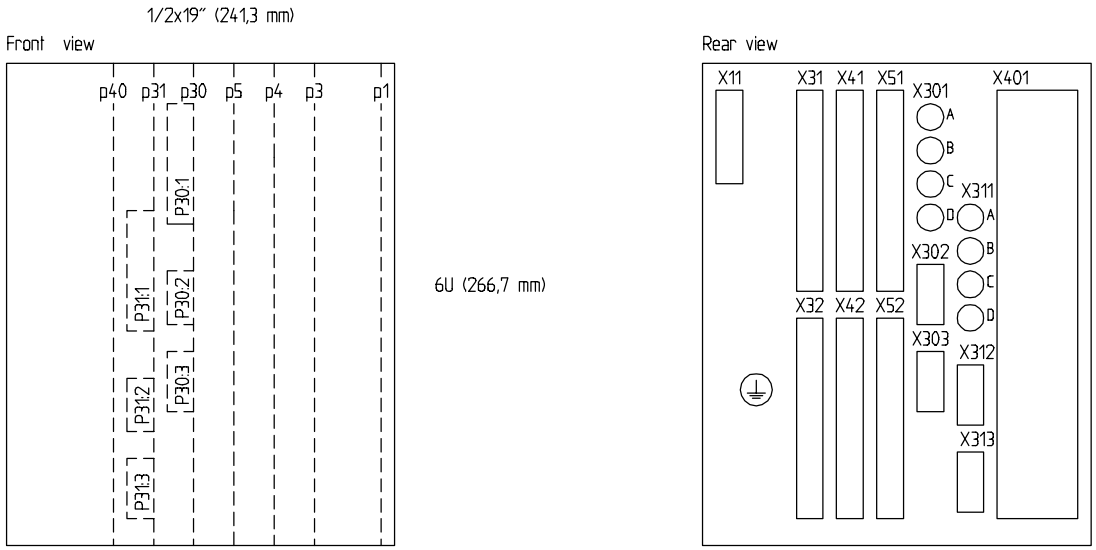

Based on		Prepared 2016-01-07	Jill Eriksson	Title Connection diagram REB650 A03X00 2 zones/1 checkzone, 3 ph high impedance	Doc.des. Doc.kind	Ref.des.	
		Approved 2016-01-12	Patrik Nyback		Resp.dept.	Rev.ind.	Lang. en
		Project		ABB AB	Doc.No. 1MRK006505-BA		Sheet 2
Rev	Rev. Note	Date	Name				Cont. 3

We reserve all rights in this document and in the information contained therein. Reproduction, use or disclosure to third parties without express authority is strictly forbidden. Copr. ABB AB

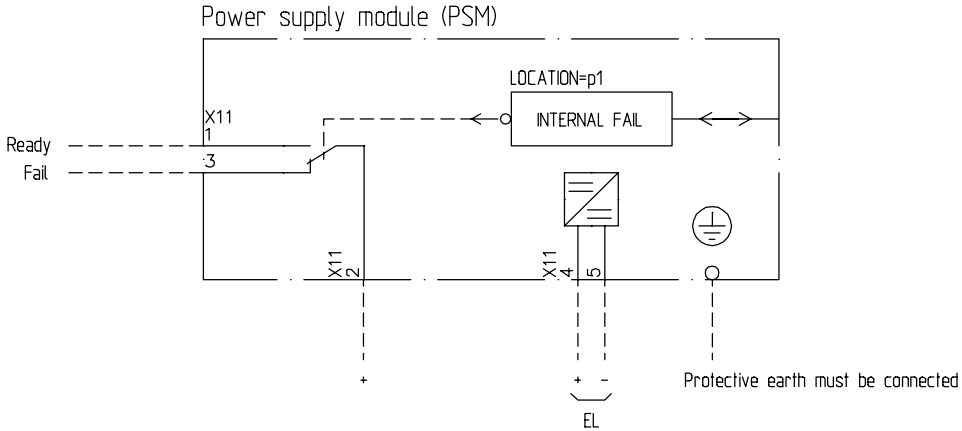

Based on	Prepared 2016-01-07	Jill Eriksson	Title Connection diagram REB650 A03X00 2 zones/1 checkzone, 3 ph high impedance
	Approved 2016-01-12	Patrik Nyback	
	Project		

Rev	Rev. Note	Date	Name

ABB AB

Doc.des.	Doc.kind	Ref.des.	
Resp.dept.	Rev.ind.	Lang.	en
Doc.No. 1MRK006505-BA		Sheet	3
		Cont.	4

We reserve all rights in this document and in the information contained therein. Reproduction, use or disclosure to third parties without express authority is strictly forbidden. Copr. ABB AB

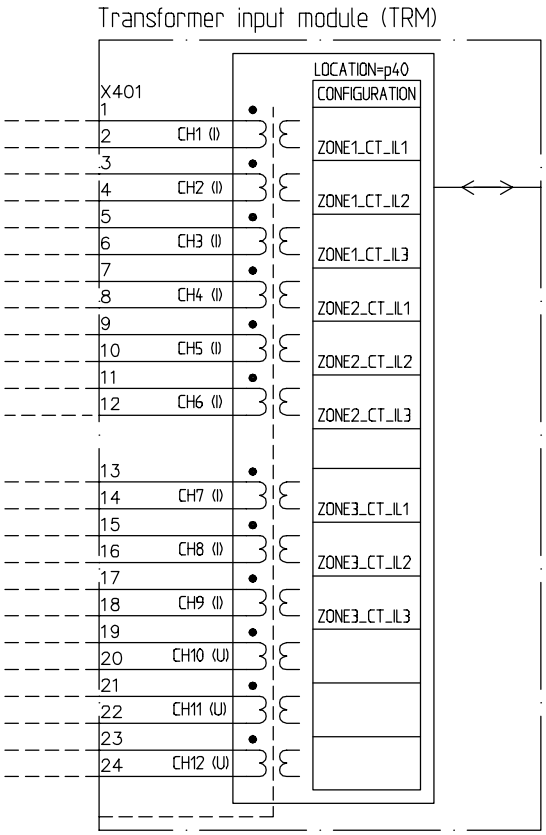

Based on	Prepared 2016-01-07	Jill Eriksson	Title Connection diagram REB650 A03X00 2 zones/1 checkzone, 3 ph high impedance
	Approved 2016-01-12	Patrik Nyback	
	Project		

Rev	Rev. Note	Date	Name

ABB AB

Doc.des.	Doc.kind	Ref.des.
Resp.dept.	Rev.ind.	Lang. en
Doc.No. 1MRK006505-BA		Sheet 4
		Cont. 5

We reserve all rights in this document and in the information contained therein. Reproduction, use or disclosure to third parties without express authority is strictly forbidden. Copr. ABB AB

Binary input module (BIM)

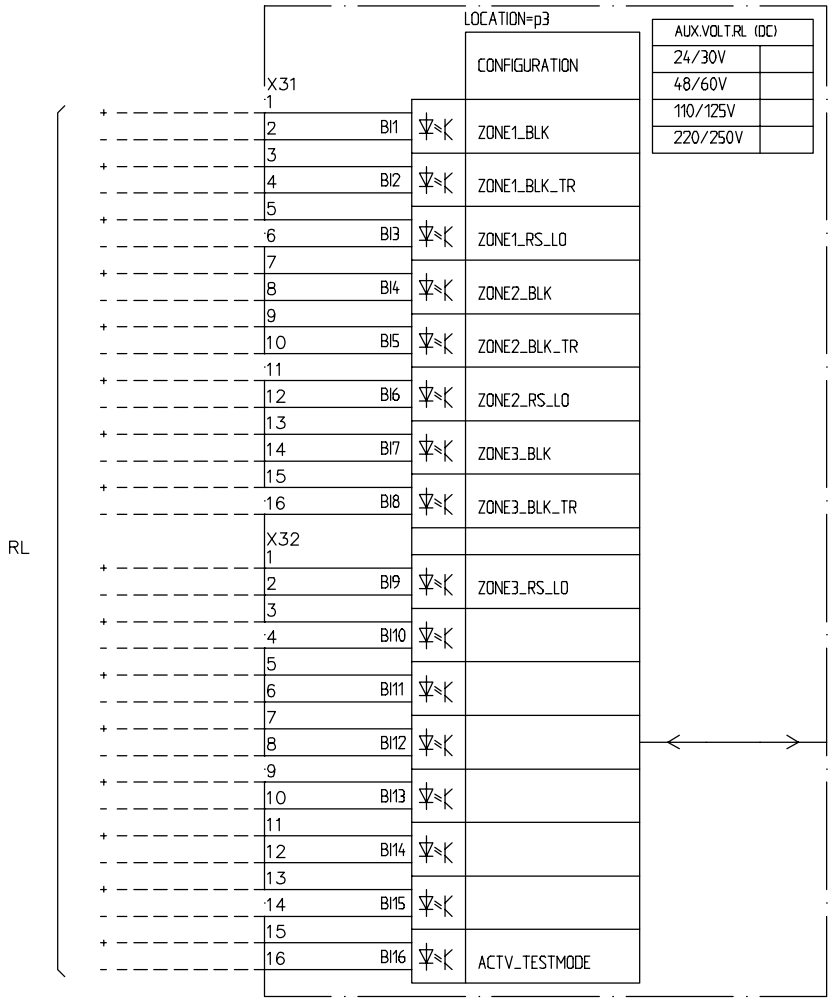

Based on	Prepared 2016-01-07	Jill Eriksson	Title Connection diagram REB650 A03X00 2 zones/1 checkzone, 3 ph high impedance
	Approved 2016-01-12	Patrik Nyback	
	Project		

Rev	Rev. Note	Date	Name

ABB AB

Doc.des.	Doc.kind	Ref.des.
Resp.dept.	Rev.ind.	Lang. en
Doc.No. 1MRK006505-BA		Sheet 5
		Cont. 6

We reserve all rights in this document and in the information contained therein. Reproduction, use or disclosure to third parties without express authority is strictly forbidden. Copr. ABB AB

Binary output module (BOM)

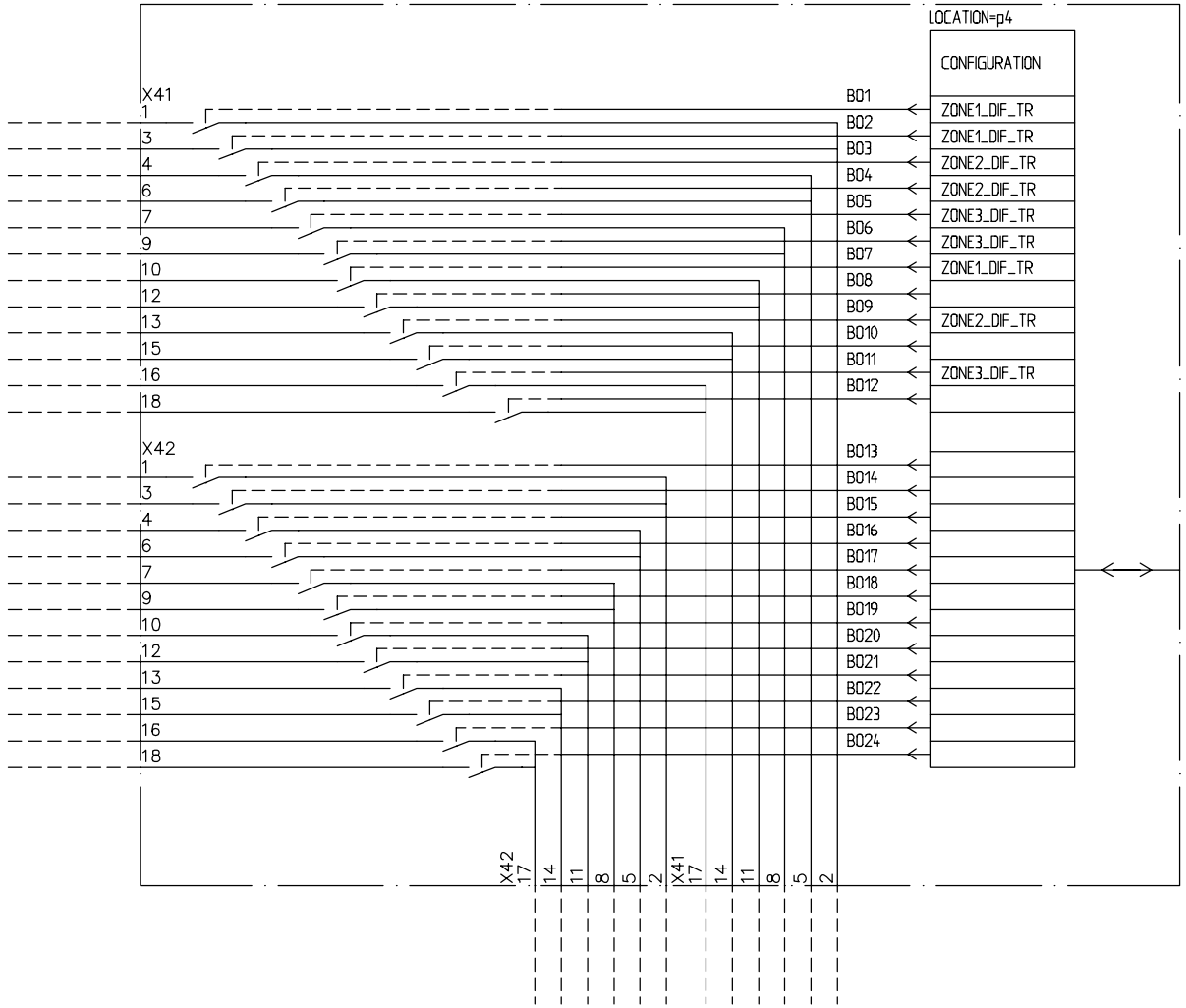

Based on	Prepared 2016-01-07 Jill Eriksson	Title Connection diagram REB650 A03X00 2 zones/1 checkzone, 3 ph high impedance	Doc.des. / Doc.kind / Ref.des.
	Approved 2016-01-12 Patrik Nyback		Resp.dept. / Rev.ind. / Lang. en
	Project	ABB AB	Doc.No. 1MRK006505-BA / Sheet 6 / Cont. –
Rev / Rev. Note / Date / Name			