ASEA BROWN BOVERI

ABB Relays

Type RAEUB

Neutral point voltage relay for systems with current converter

B03-2712[E]
Page 1
January 1987
Changed since January 1985
Data subject to change without notic

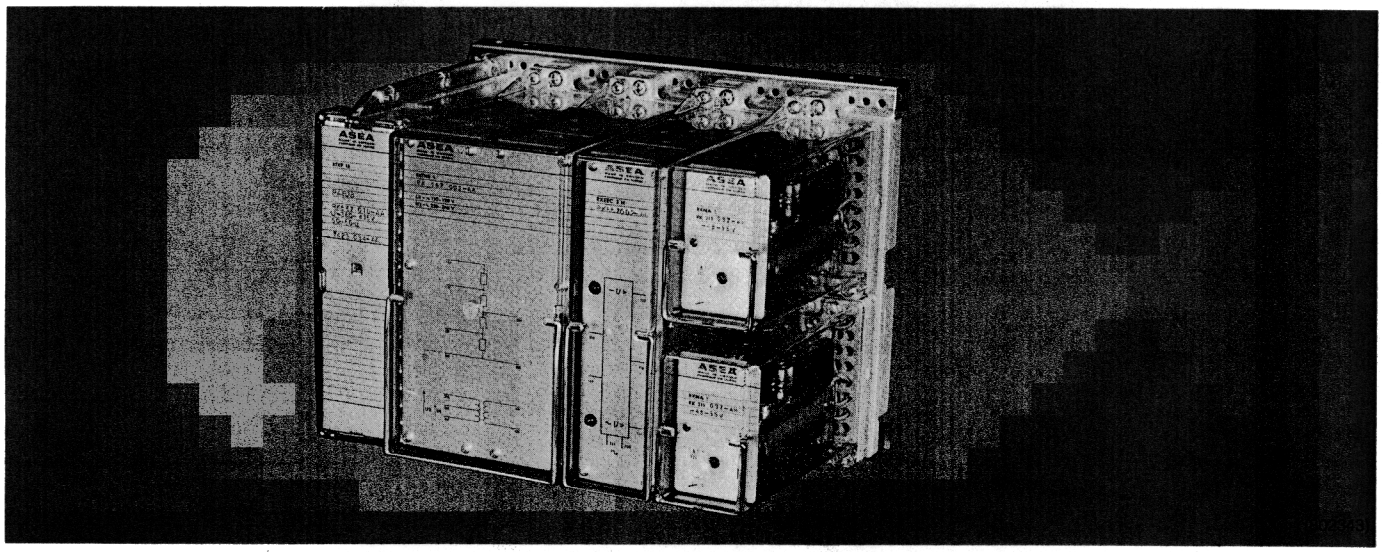

Abstract

- **Provides ground-fault protection on systems incorporating power converters**
- **Operates selectively for single ground-faults on the dc and ac sides**
- **Highly sensitive**
- **Operates even for low direct-voltages**
- **Available for system voltages from 220 V to 1250 V, 50–60 Hz**
- **Can be connected either to the neutral point of the system or to the phases**
- **Trip relay included**
- **Target for indicating dc ground fault**
- **Test switch included**

Application

The RAEUB is used in three-phase systems having an isolated neutral point and containing dc converters. The system may also contain frequency converters if the amplitude of the dc-link voltage is regulated and the maximum output frequency is 65 Hz. It cannot be used in systems including pulse width modulated (PWM) frequency converters since these generate harmonic voltages which, at certain voltages, are higher than the fundamental harmonic voltage that arises in RAEUB during a ground-fault. For protection of systems with PWM frequency converter, refer to typeRAERA.

The RAEUB is available in various versions and for use in systems with or without accessible neutral point.

The relay has two measuring circuits and oper ates selectively for single ground-faults on the ac- and the dc-side of the system. The measur ing circuits have fixed operate values adapted to the system voltage for high sensitivity during ground-faults and with little influence by capaci tive ground currents.

At rated frequency, the relay operates fo ground-faults on the ac side at approximatel 1/3 of the neutral point voltage during a full developed ground fault. At lower frequencies the sensitivity increases so that, in systems which incorporate a frequency converter, the relay operates down to approximately 16 % o full dc-voltage. The same sensitivity applies t ground-faults which occur on the dc side.

Design

Five versions of RAEUB are available.

Versions for system voltage 220–600 V, with neutral point:
Version 1 contains only the basic unit i.e. RXTNR 4 adaption unit, RXEEC 2H measuring unit and two RXMA 1 output relays and has modular dimensions 4S 24C.
Version 2 contains the basic unit and a test switch RTXP 18. This version is intended for installations which have centrally located tripping relays. It has the modular dimensions 4S 30C.
Version 3 contains the basic unit and a tes switch RTXP 18 and a tripping relay RXME 18. I has the modular dimensions 4S 36C.

Version for system voltage 380–600 V, withou neutral point:
Version 4 contains the basic unit a test switch RTXP 18, a tripping relay RXME 18, and a resis

Design (cont'd)

tor unit which forms an artificial neutral point to which the measuring circuits of the protective relay are connected. This version has the modular dimensions 4S 48C.

Version for system voltage 380–1250 V, with or without neutral point:
Version 5 consists of a version 1 mounted on an insulating plate (248 x 420 mm) together with three or six power resistors and terminal blocks.

A neutral point equipment which limits the voltage in case of a flash-over in the supplying power transformer is recommended for all versions. It is mounted in an GKB 855 enclosure.

Technical data

System voltage	220–1250 V
Rated frequency	50–60 Hz
Auxiliary ac voltage, 50–60 Hz, U1, U2	110–120 or 220/240 V reconnectible
Auxiliary dc voltage, UL (versions 3 and 4 only)	12, 24, 48–55, 110–125 or 220–250 V
Operate value	See operate value data table
Operate time for direct ground-faults on the	
ac side	*< 750 ms*
dc side	*< 250 ms* + 30 ms for trip relays, versions 3 and 4
Overload capacity:	
continuously	1.1 x system voltage
0.5 s	2000 V
Power consumption:	
Auxiliary ac voltage circuit, U1, U2	<3 VA
Auxiliary dc voltage circuit, UL	<2 W
Dielectric test, 50 Hz, 1 min.:	2 kV version 2–4 5 kV version 1 and 5
Impulse voltage test	1.2/50 µs, 5 kV, 0.5 J
1 MHz burst test, 2 s, common/transverse	2.5/1.0 kV
Weight	
version 1	*3.5 kg*
2	*4.5 kg*
3	*4.8 kg*
4	*5.8 kg*
5	*7.5 kg*
Neutral point equipment	*15 kg*

Contact data:
RXMA 1 and RXME 18 — See auxiliary relay data table B03-1003E

Operate value data table:[1])

RAEUB intended for syst. voltage V	Input resistance kohm	Operate voltage[2]) ac V	dc V
220 240	2.6	38–48	20–24
380 415	5.3	66–82	32–40
440 500	7.9	78–96	36–46
550 600	10.4	100–122	46–56
660 860	12.7	122–150	56–68
870 970	15.7	150–185	70–84
980 1100	17.4	165–205	76–94
1100 1250	20.7	200–245	92–112

[1]) Operate value for 60 Hz = (0.95–1.1)×operate value for 50 Hz

[2]) Voltage between neutral point and ground at operation

To order

Specify:
- Type RAEUB
- Quantity
- Ordering no. (see ordering table)
- System voltage
- Auxiliary dc voltage, for the tripping relay (versions 3 and 4)
- Wording on the face plate of the test switch. Maximum 10 lines with 10 characters per line

Mounting:
- RAEUB versions 1–4 are provided on apparatus bars. When additional mounting is required, specify a 4S equipment frame for 19" rack mounting or a type RHGX case for panel mounting. RAEUB version 5 is provided on an insulating plate for panel mounting or cubicle mounting.

Options:
- Neutral point equipment

Mounting and connection:
- See B03-9301E

Ordering table:

System voltage 50–60 Hz	Version	Circuit diagram	Ordering no.
220–240, 380–415	1	7423 034-DA	RK 667 010-DA
440–500 or 550–600 V with neutral point	2	7423 034-AA	RK 667 010-AA
	3	7423 034-BA	RK 667 010-BA
380–415, 440–500 or 550–600 V, without neutral point	4	7423 037-BA	RK 667 012-BA
380–430 V	5	4873 042-GK	YT 299 000-TN
440–540, 550–650 or 660–860 V			YT 299 000-TP
870–970, 980–1100 or 1110–1250 V			YT 299 000-TR
Neutral point equipment			SK 116 523-AF

Terminal diagram

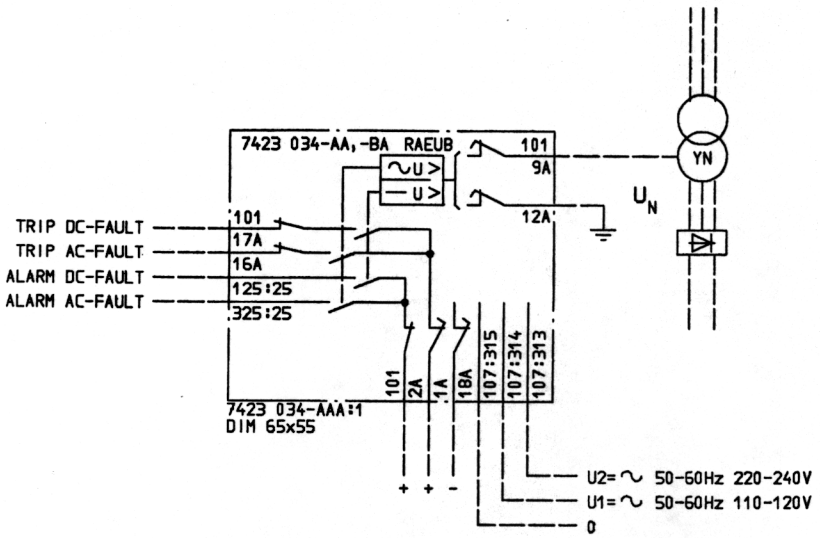

Neutral point voltage relay for system with static convertor and/or static frequency convertor

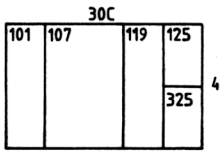

101	RTXP 18
107	RXTNR 4
119	RXEEC 2H
125, 325	RXMA 1

Fig. 1 Terminal diagram no. 7423 034-AAA

Reference

Buyer's Guide	No.
Type RXMA 1	B03-1210E
Type RXME 18	B03-1111E
Type RAERA	B03-2711E
Test system COMBITEST	B03-9510E
Mounting and connection	B03-9301E
Dimensions	B03-9382E
Further information:	
Description	RK 667-300E