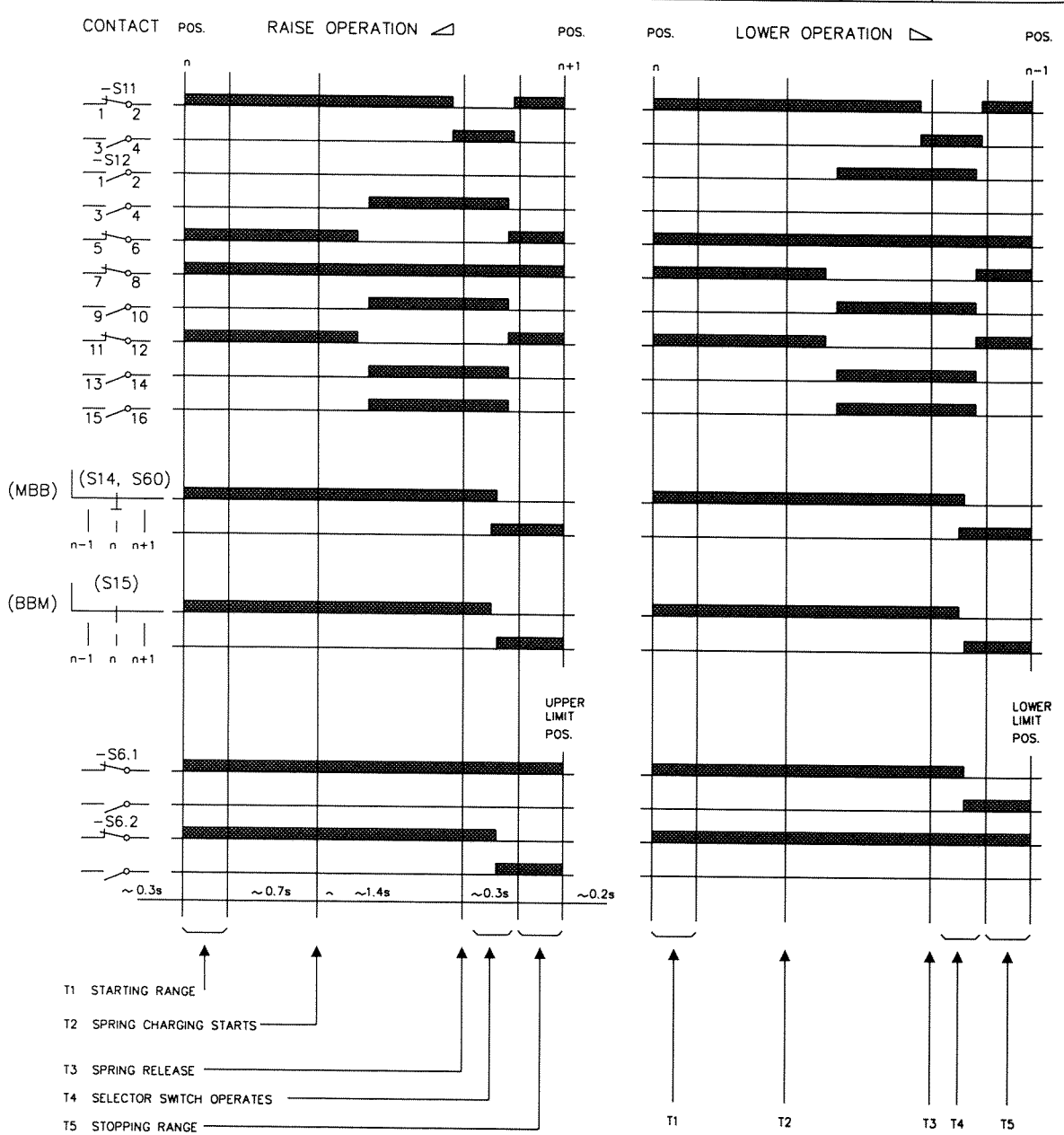

F2	Circuit breaker, control circuit
K1	Contactor, step by step operation
K2	Contactor, raise
K3	Contactor, lower
K601	Time relay, running-through protection
K602	Time relay, tap-change incomplete
K7	Undervoltage relay, motor circuit
M1	Motor
Q1	Motor protective switch
S1	Control selector switch
S2	Control switch
S5	Interlocking switch, open when hand crank is fitted
S6	Cam switch (Limit switch)
S8	Push button, EMERGENCY STOP
S11	Contact block
	1-2 Starting contact
S12	Cam switch
	1-2, 3-4 Maintaining contact
	5-6, 7-8 Interlocking contact
	9-10, 11-12 Auxiliary contact
	13-14, 15-16 Auxiliary contact
S15	Continuation contact
S60	Resetting switch
X	Terminal board group

FOR HEATER, LIGHT CIRCUIT AND TAP-POSITION TRANSMITTER No. S14 ETC, SEE SEPARATE DIAGRAMS.

◿	Raise operation	□ ●	Remote control
◺	Lower operation	◉	Local control
U	Upper limit pos.	⏚	Protective earth
L	Lower limit pos.	o—	Crank

We reserve all rights in this document and in the information contained therein. Reproduction, use or disclosure to third parties without express authority is strictly forbidden. © ABB Components AB

Based on	Prepared 2002-11-01 THLA Approved 2003-01-17 TOLA	Circuit Diagram Motor-drive Mechanism TYPE BUF 3	Resp dept COM/FOK Rev ind Lang Sheet 1 Cont 2
		ABB	5483 536-16

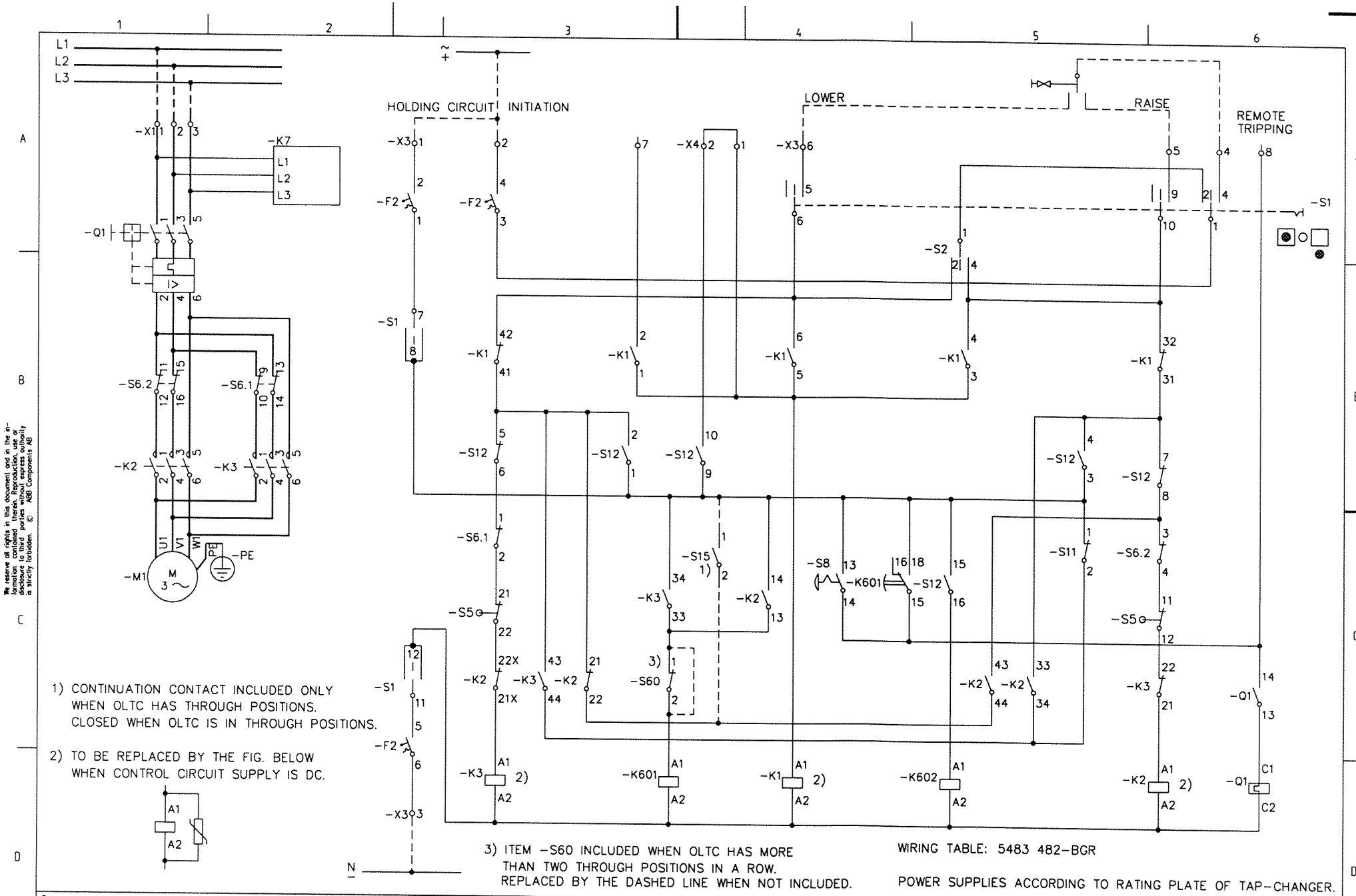

1) CONTINUATION CONTACT INCLUDED ONLY WHEN OLTC HAS THROUGH POSITIONS. CLOSED WHEN OLTC IS IN THROUGH POSITIONS.

2) TO BE REPLACED BY THE FIG. BELOW WHEN CONTROL CIRCUIT SUPPLY IS DC.

3) ITEM -S60 INCLUDED WHEN OLTC HAS MORE THAN TWO THROUGH POSITIONS IN A ROW. REPLACED BY THE DASHED LINE WHEN NOT INCLUDED.

WIRING TABLE: 5483 482-BGR

POWER SUPPLIES ACCORDING TO RATING PLATE OF TAP-CHANGER.

We reserve all rights in this document and in the information contained therein. Reproduction, use or disclosure to third parties without express authority is strictly forbidden. © ABB Components AB

Based on	Prepared 2002-11-01 THLA	Circuit Diagram Motor-drive Mechanism TYPE BUF 3	=MD
	Approved 2003-01-17 TOLA		Resp dept COM/FOK
		ABB	5483 536-16

Rev ind | Lang | Sheet 2 | Cont 3

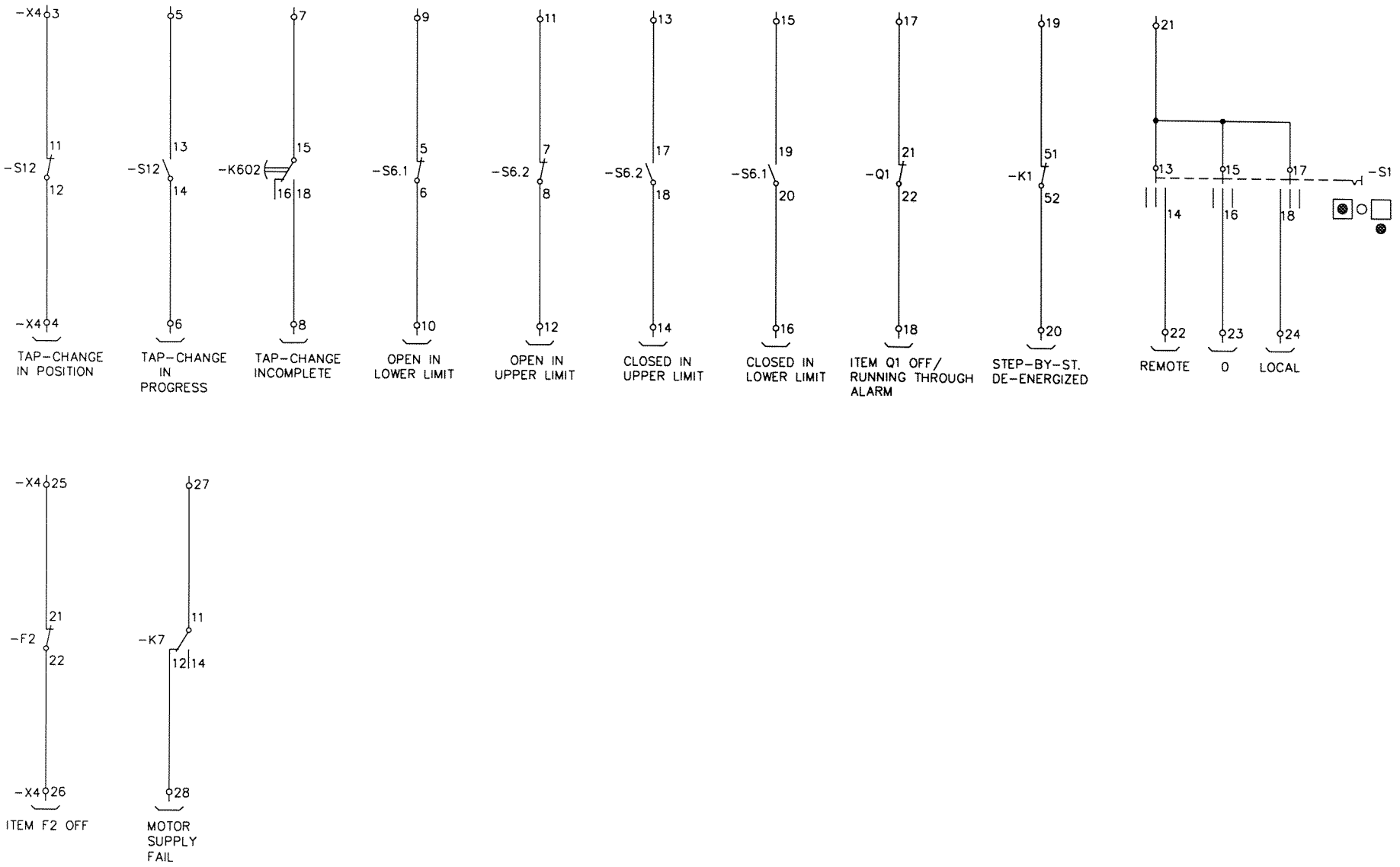

We reserve all rights in this document and in the information contained therein. Reproduction, use or disclosure to third parties without express authority is strictly forbidden. © ABB Components AB

Based on	Prepared 2002-11-01 THLA	Circuit Diagram Motor-drive Mechanism TYPE BUF 3	=MD	
	Approved 2003-01-17 TOLA		Resp dept COM/FOK	Rev ind / Lang
		ABB	5483 536-16	Sheet 3 / Cont –