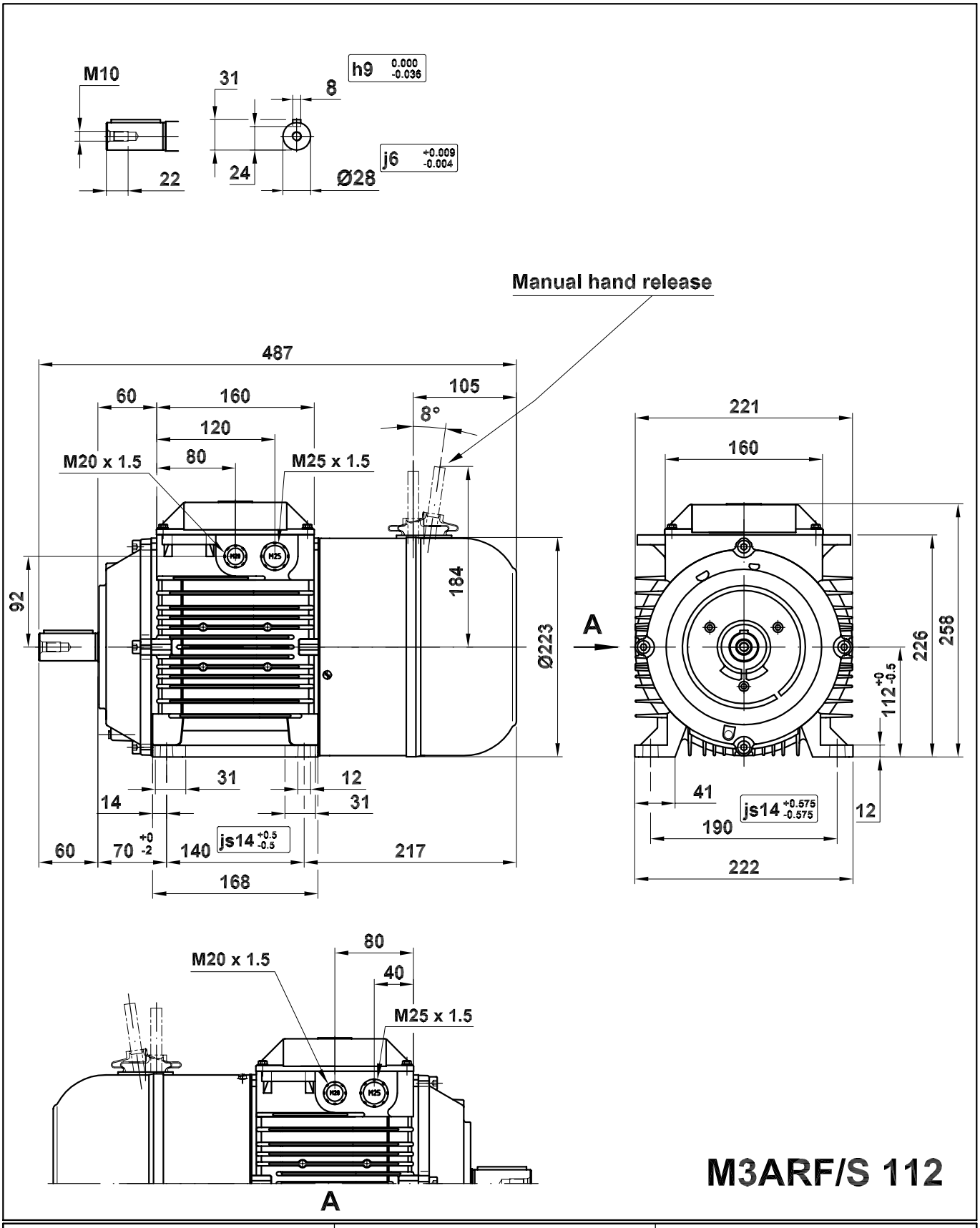


# M3ARF/S 112

| Motor Dimension Print | Motor Type : M3ARF/S 112 | Document Nº : AE 4431 5138-101R |
|---|---|---|

Description :

Brake motor foot mounted IM 1001 / Motor freno con patas IM 1001

| | | |
|---|---|---|
| Unit : División Motores, Spain. | Issued by : IKP/G.Blanes | Replaces : 1999-01-14 |
| Date : 2003-07-31 | Approved by : IKP/G.Blanes | Replaced by : |

ABB Automation Products, S.A.

Customer Reference :

ABB