First angle projection. Original drawing made with Pro/ENGINEER. Set the correct scale factor when adding dimensions after DWG/DXF conversion.

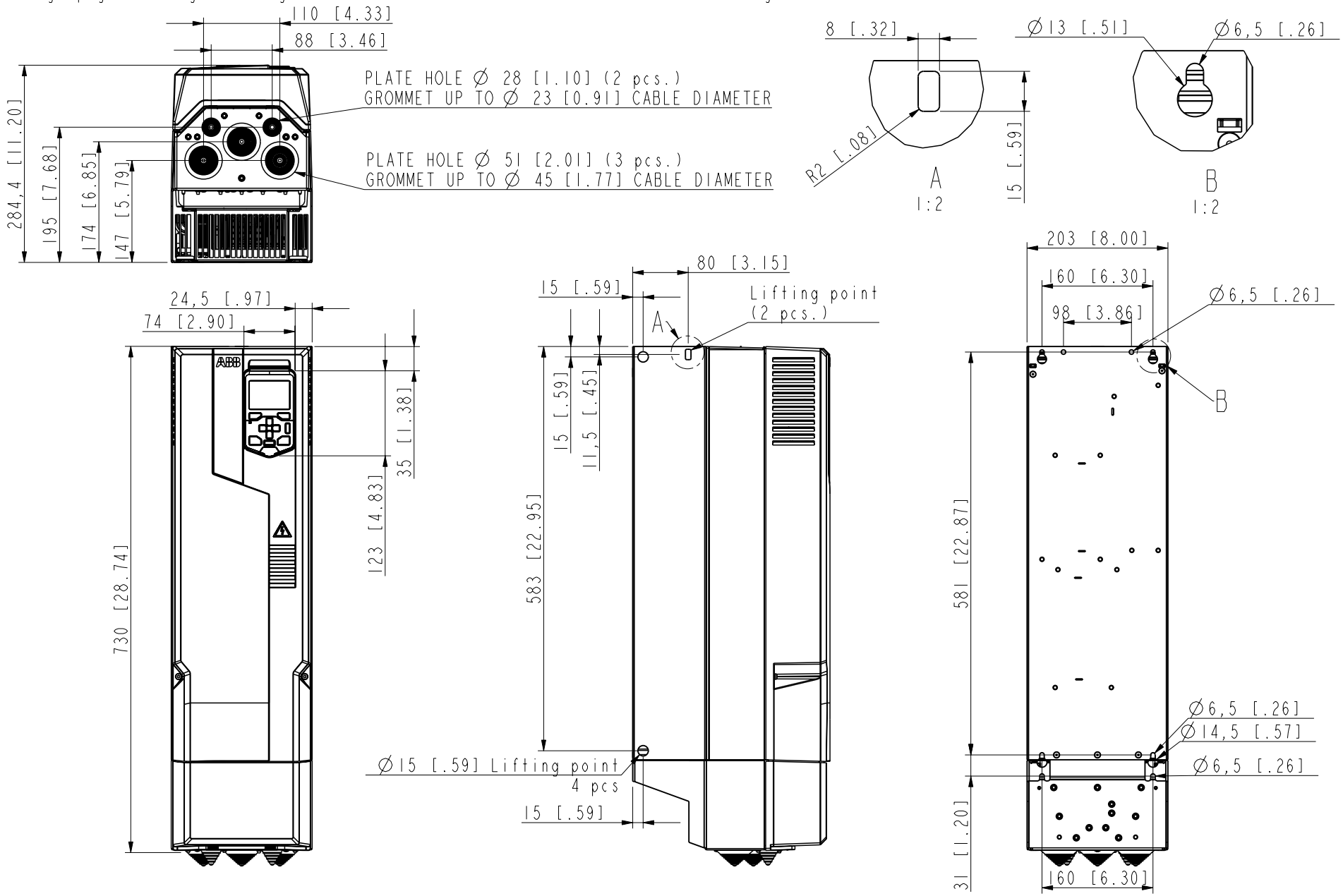

We reserve all rights in this document and in the information contained therein. Reproduction, use or disclosure to third parties without express authority is strictly forbidden. © ABB Oy. PROPRIETARY AND SECRET INFORMATION. CONFIDENTIAL

Based on	Prepared I.Jutila 23-Aug-13	Title DIMENSION DRAWING	Doc. des. DIMENSION DRAWING	Scale 1:100	Form A4
Customer	Check. S.Poikolainen 23-Aug-13	R5 DIMENSION DRAWING			
	Appr. M.Nupponen 23-Aug-13	ACX580	Resp.dept.	Rev.ind. A (AP)	Lang. EN
Cust. Doc. No.	Project name	ABB	Doc. No. 3AXD50000008959		Sheet 1
DMS Number 3AXD10000258138	Weight kg 45595964.90				Total 1

3AXD50000008959 R5V1_MAIN_ASSEMBLY (ASSEM) A.0+ -.10

A Initial Approval 23-Aug-13 I.Jutila