Doc. N.° 1SDH002011A1628 - ECN000231036 - Rev. D

SACE Tmax XT

BS - Protezione posteriore XT5 2x2/0AWG...500kcmil
BS - Back shield XT5 2x2/0AWG...500kcmil
BS - Rückseitiger Abdeckung XT5 2x2/0AWG...500kcmil
BS - Protection arrière XT5 2x2/0AWG...500kcmil
BS - Protección posterior XT5 2x2/0AWG...500kcmil
BS - XT5 2x2/0AWG...500kcmil 后部保护的

XT5

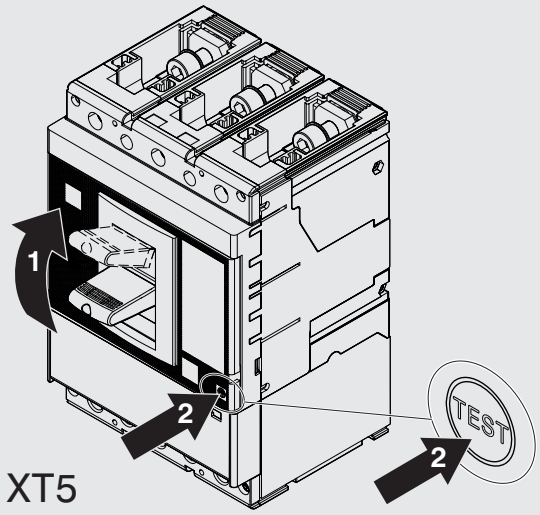

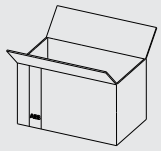

A

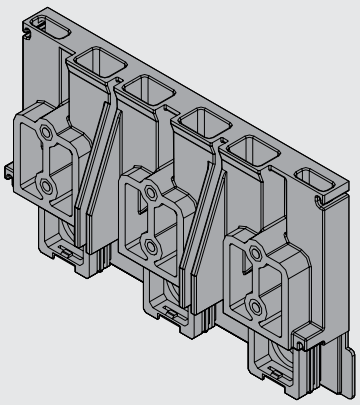

B

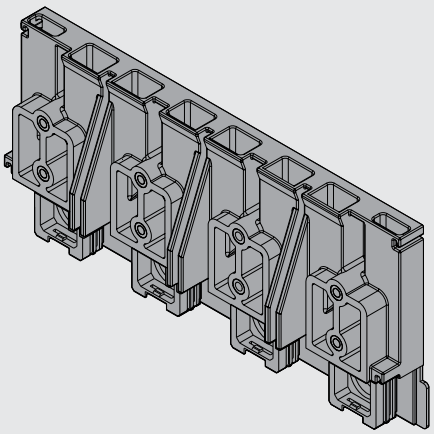

XT5	3p	1	/
	4p	/	1

1

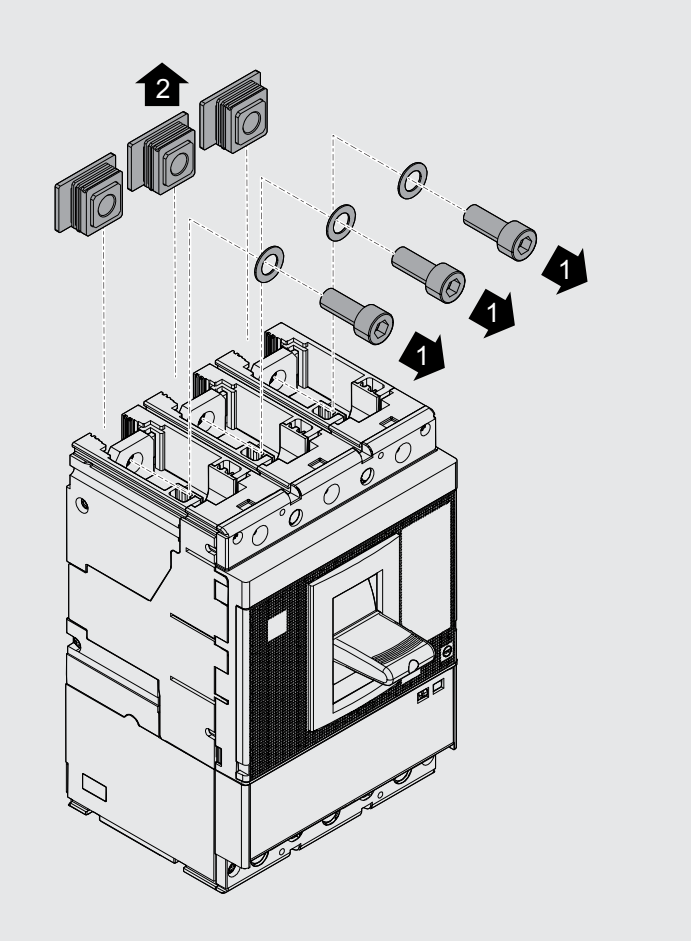

2

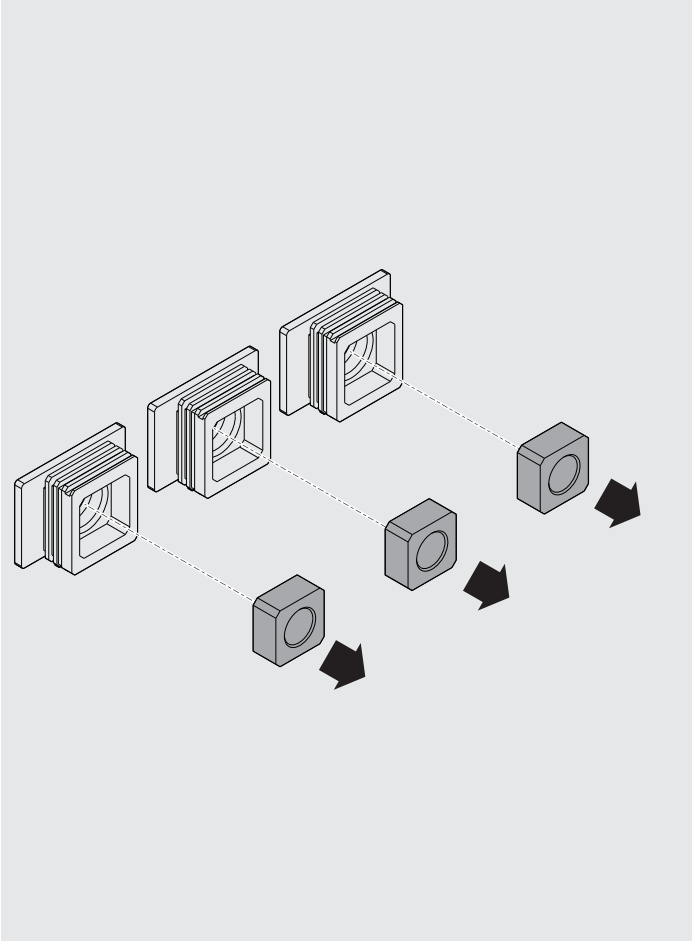

3

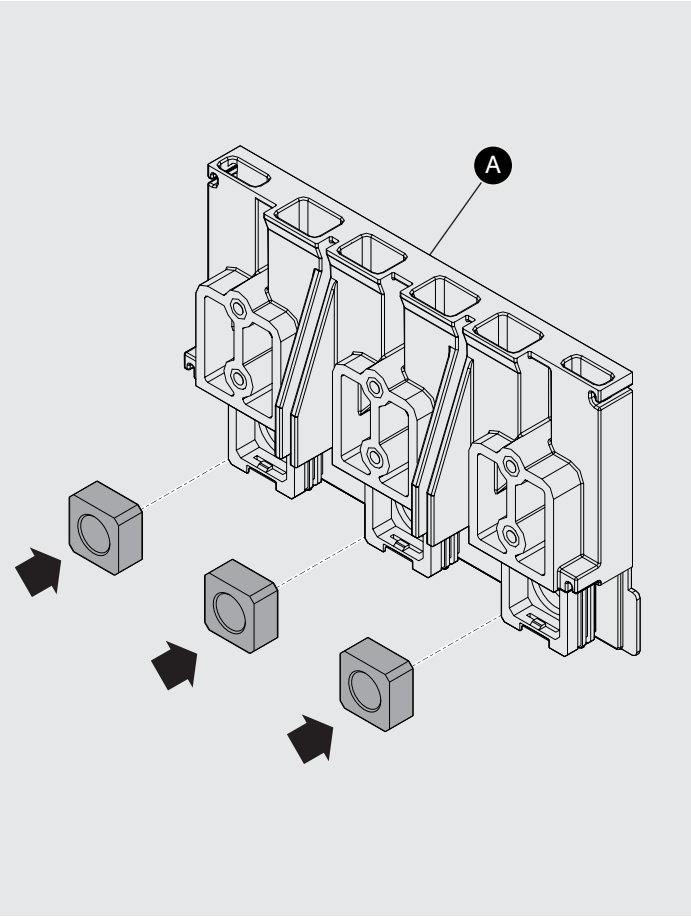

4 **Upper terminal 3p-4p**

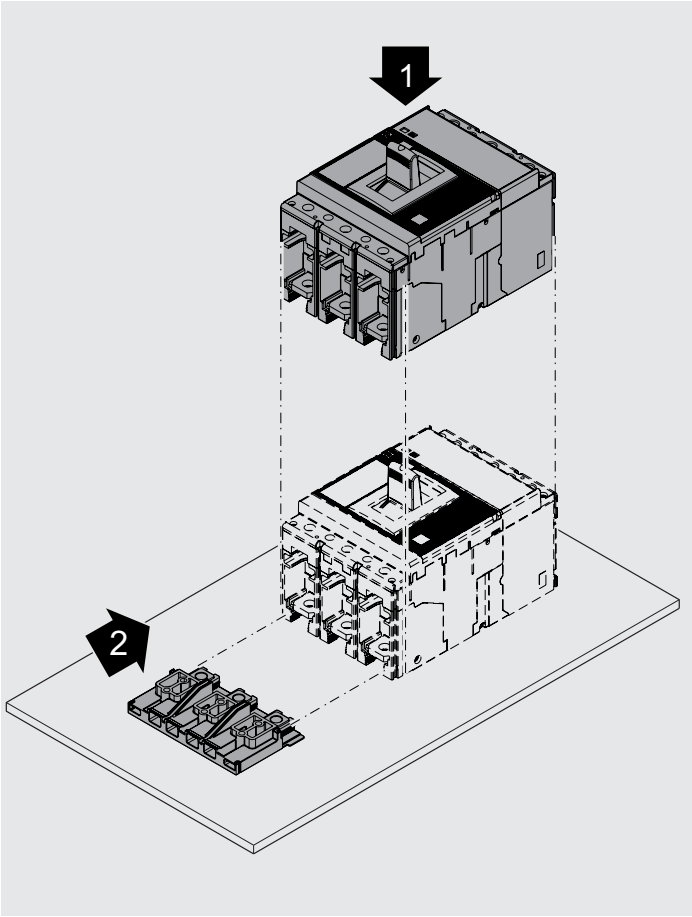

5 Lower terminal 3p-4p

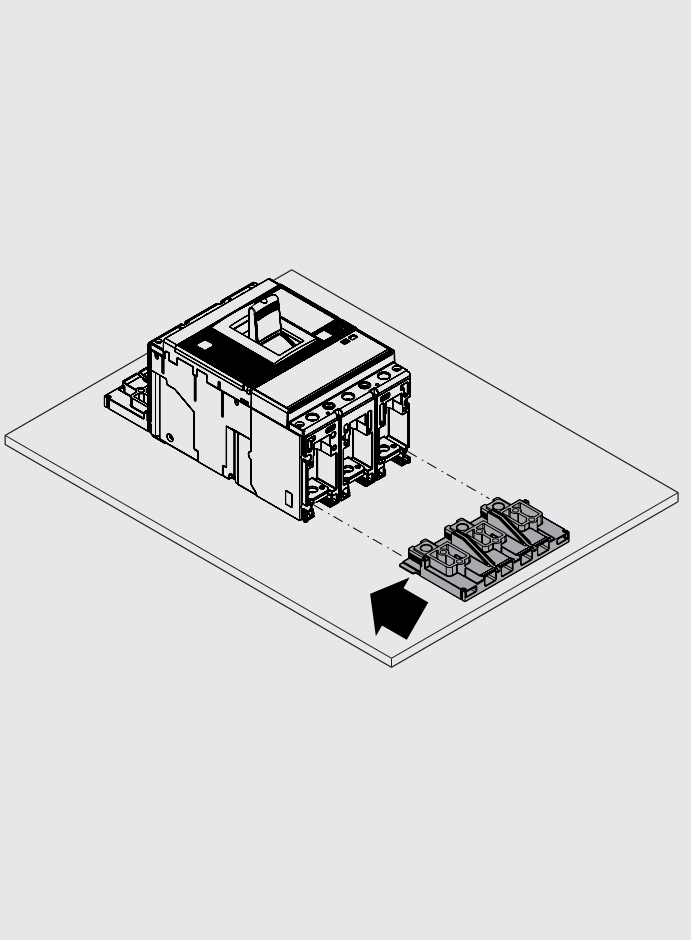

6 FCCuAl 2x2/0AWG...500kcmil

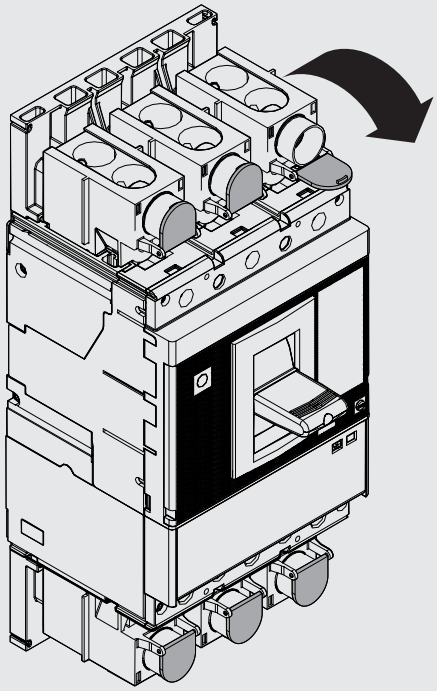

MAX	500 kcmil	240 mm²
MIN	2/0AWG	70 mm²

7 FCCuAl 2x2/0AWG...500kcmil

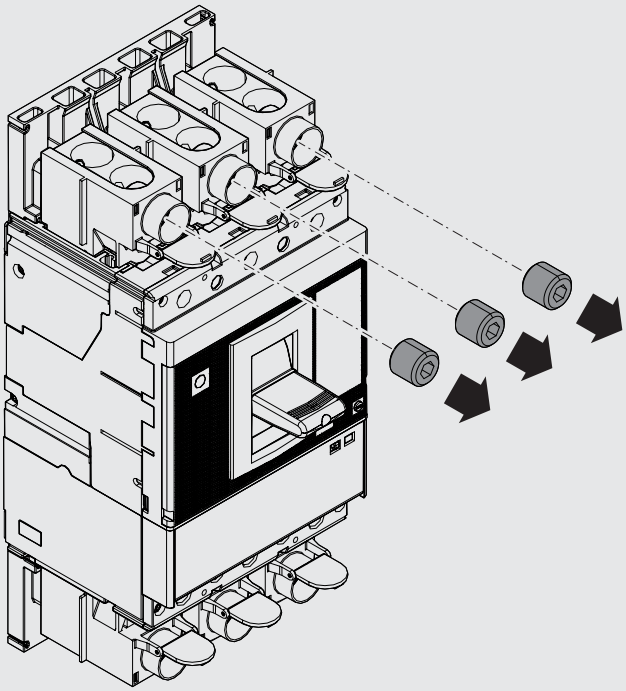

8 FCCuAl 2x2/0AWG...500kcmil

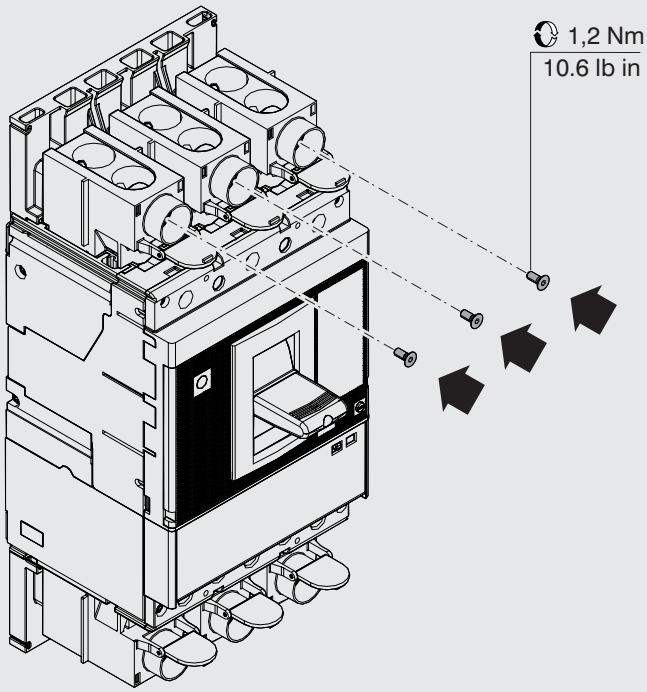

9 FCCuAl 2x2/0AWG...500kcmil

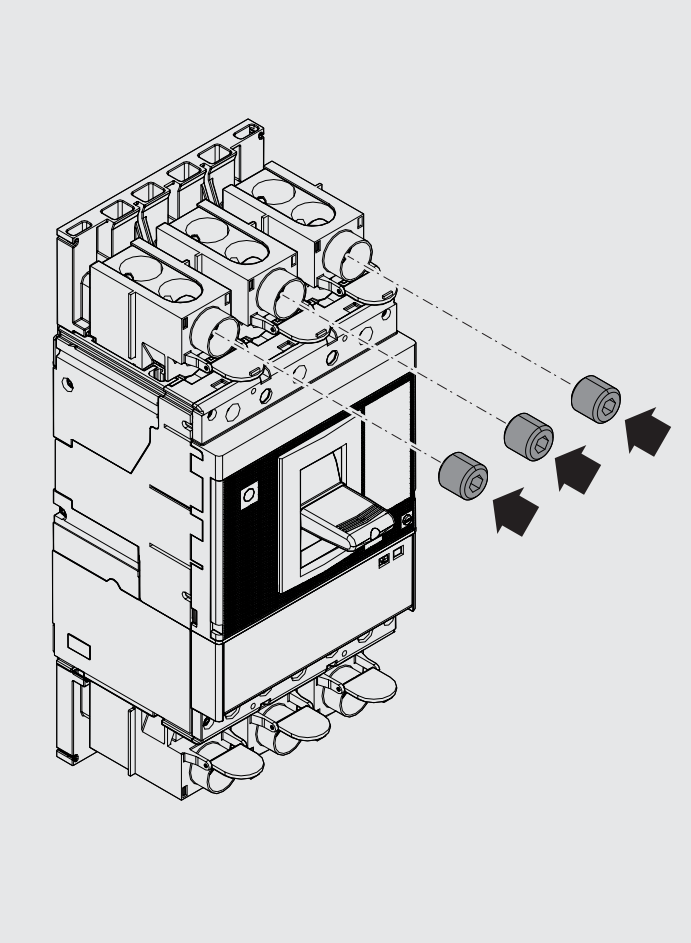

10 FCCuAl 2x2/0AWG...500kcmil

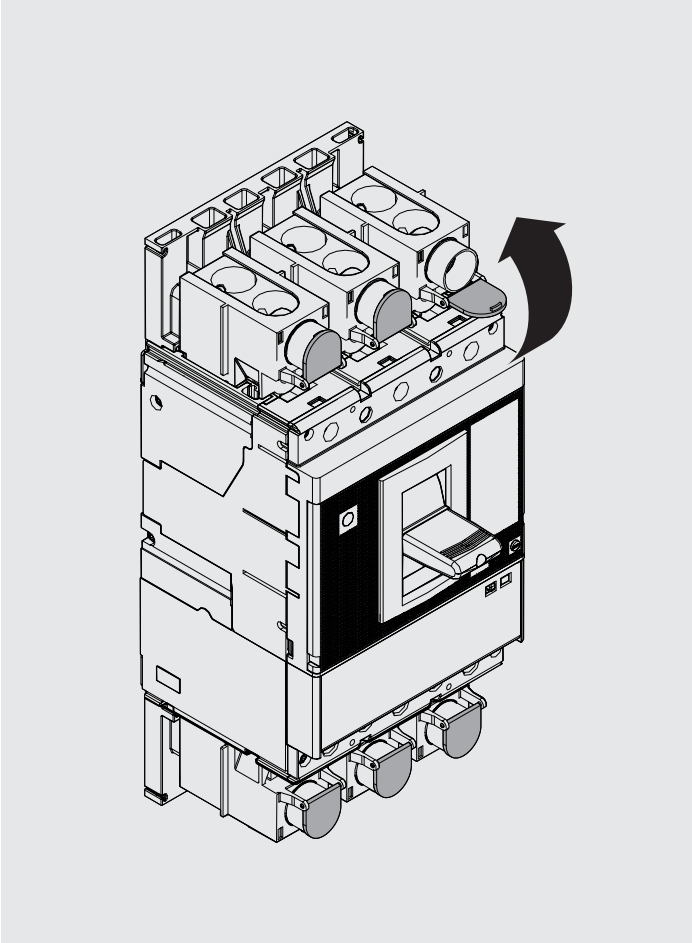

11 Example with phase barriers

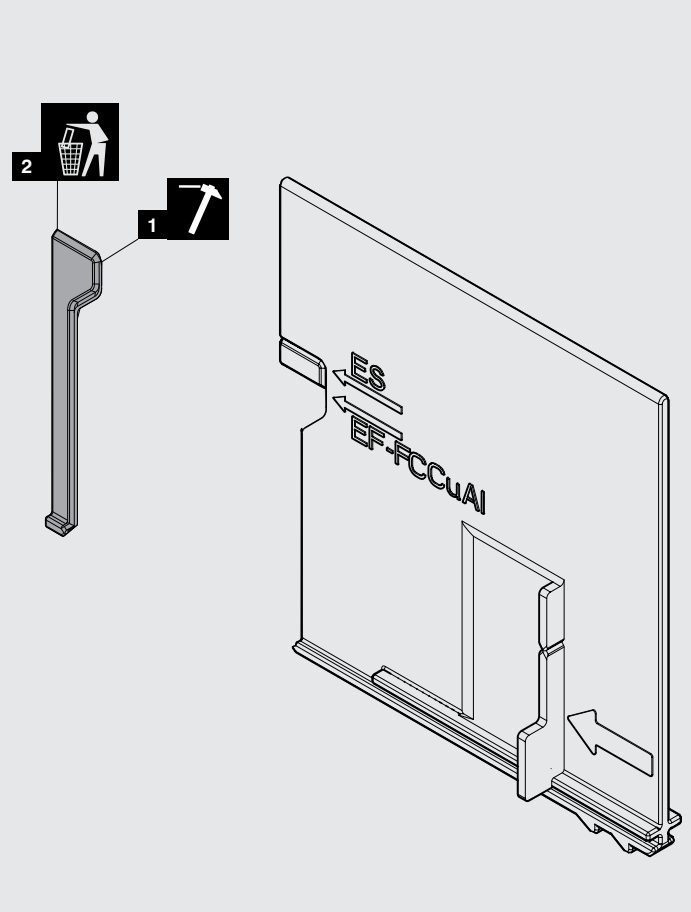

12 Example with phase barriers

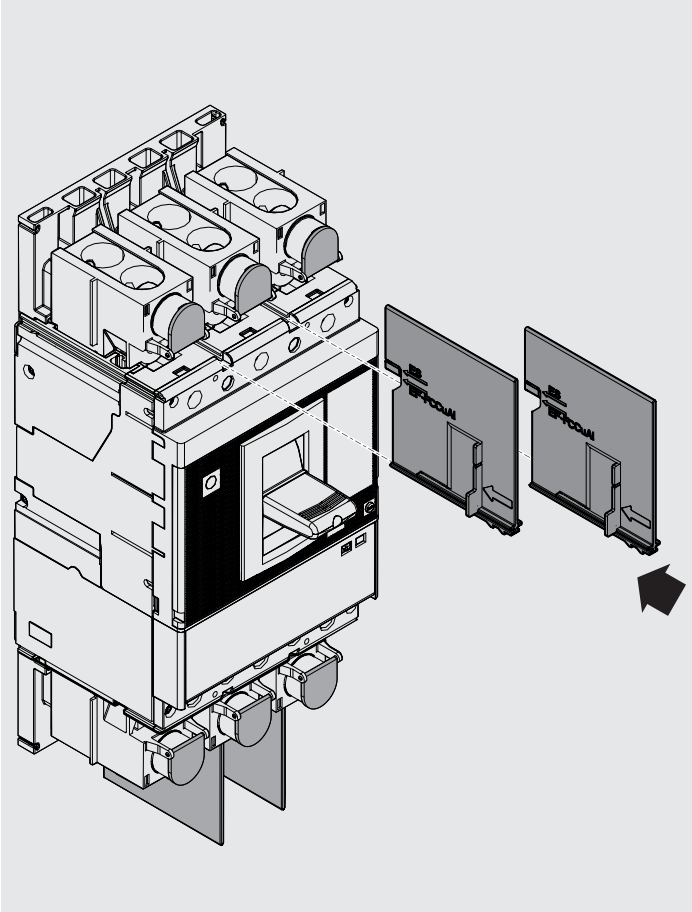

© Copyright 2020-2022 ABB. All rights reserved.