Table of contents

1/2x19"

Rear view slot

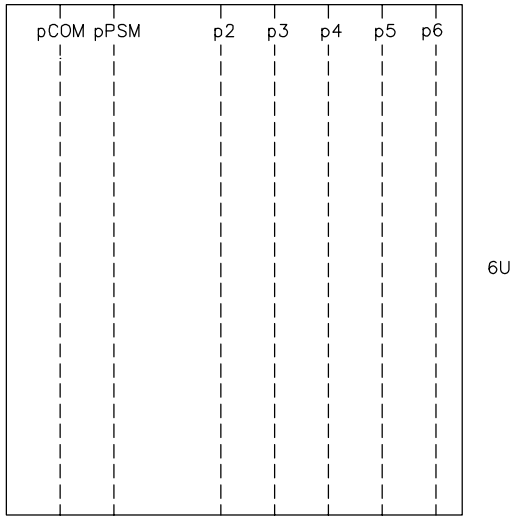

p= Position

Rear view terminal

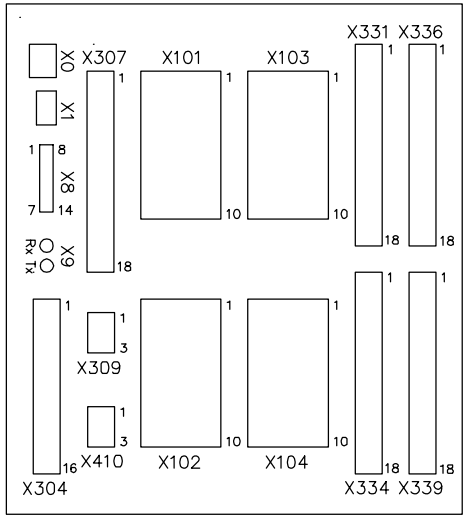

Designation for 6U, 1/2x19" casing with 1 TRM and 1 AIM

Module	Slot	Terminal
COM	pCOM	X0, X1, X8, X9, X304
PSM	pPSM	X307, X309, X410
TRM	p2	X101, X102
AIM	p4	X103, X104
BIO	p5	X331, X334
BIO	p6	X336, X339

Based on	Prepared 2011-08-23	Agneta Rydh	Title Connection Diagram RET650 (3W/1CB) A05A ANSI symbols
	Approved 2011-11-30	Patrik Nyback	
	Project		

Rev	Rev. Note	Date	Name

ABB AB

Doc.des.	Ref.des.
Doc.kind	
Resp.dept. PSTP/TPLA	Rev.ind.
Doc.No. 1MRK006502-FC	Lang. en
	Sheet 2
	Cont. 3

1/1x19"

Rear view slot

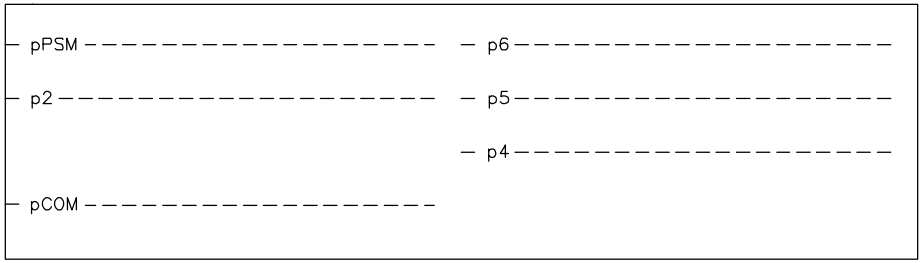

p= Position

Rear view terminal

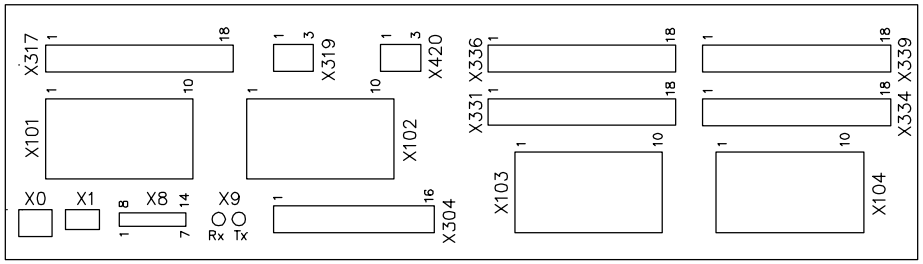

Designation for 3U, 1/1x19" casing with 1 TRM and 1 AIM

Module	Slot	Terminal
COM	pCOM	X0, X1, X8, X9, X304
TRM	p2	X101, X102
PSM	pPSM	X317, X319, X420
AIM	p4	X103, X104
BIO	p5	X331, X334
BIO	p6	X336, X339

Based on	Prepared 2011-08-23	Agneta Rydh	Title Connection Diagram RET650 (3W/1CB) A05A ANSI symbols
	Approved 2011-11-30	Patrik Nyback	
	Project		
Rev / Rev. Note / Date / Name			ABB AB

Doc.des.	Doc.kind	Ref.des.	
Resp.dept.	PSNX/TPLA	Rev.ind.	Lang. en
Doc.No. 1MRK006502-FC			Sheet 3
			Cont. 4

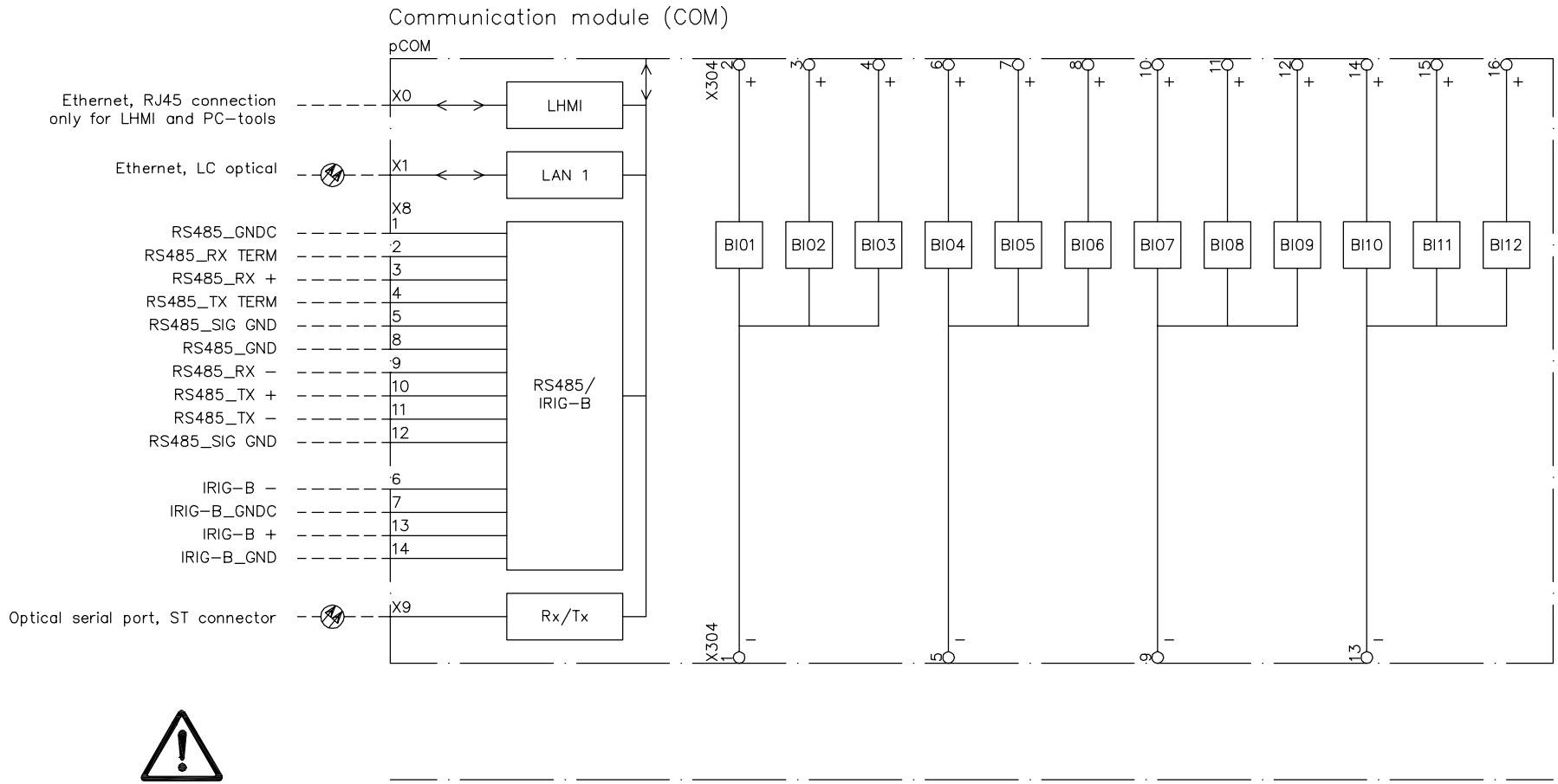

Observe polarity sequence

Configuration plant adapted

BI01	BUCHOLZ_TRIP
BI02	PRESSURE_TRIP
BI03	EXT_TRIP_XFMR
BI04	WDG1_EXT_TRIP
BI05	WDG2_EXT_TRIP
BI06	WDG3_EXT_TRIP
BI07	CHANGE_LOCK
BI08	ACTV_TESTMODE
BI09	SPARE
BI10	OIL_TEMP_TRIP
BI11	WNDG_TEMP_TR
BI12	EXT_START_DFR

Based on	Prepared 2011-08-23	Agneta Rydh	Title Connection Diagram RET650 (3W/1CB) A05A ANSI symbols
	Approved 2011-11-30	Patrik Nyback	
	Project		

Rev	Rev. Note	Date	Name

ABB AB

Doc.des.	
Doc.kind	
Ref.des.	
Resp.dept.	PSTP/TPLA
Rev.ind.	
Lang.	en
Sheet	4
Cont.	5
Doc.No.	1MRK006502-FC

Power supply module 48–125 VDC (PSM)

pPSM

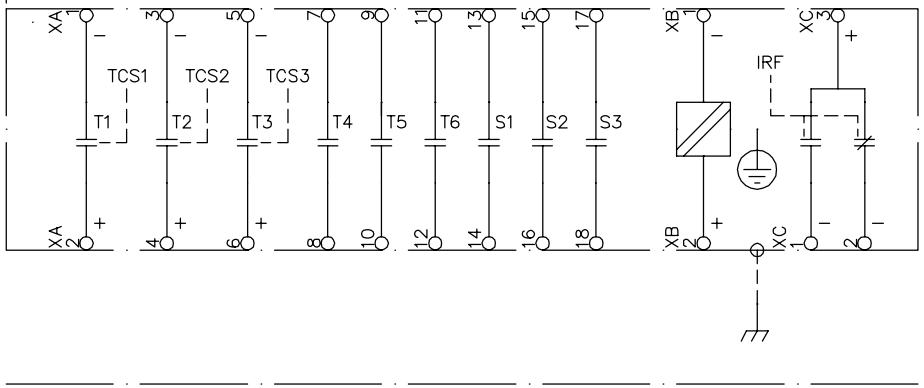

Rack casing	=XA	=XB	=XC
6U, 1/2x19"	X307	X410	X309
3U, 1/1x19"	X317	X420	X319

Observe polarity sequence

Configuration plant adapted

T1	WDG1_BKR_TRIP
T2	WDG2_BKR_TRIP
T3	WDG3_BKR_TRIP
T4	WDG1_BKR_TRIP
T5	WDG2_BKR_TRIP
T6	WDG3_BKR_TRIP
S1	WDG1_PR_TRIP
S2	WDG2_PR_TRIP
S3	WDG3_PR_TRIP
	Auxiliary supply EL
	Protective earth
	Normal
	Fail

Based on	Prepared 2011-08-23	Agneta Rydh	Title Connection Diagram RET650 (3W/1CB) A05A ANSI symbols
	Approved 2011-11-30	Patrik Nyback	
	Project		
Rev / Rev. Note / Date / Name			ABB AB

Doc.des.	Doc.kind	Ref.des.	
Resp.dept.	PSTP/TPLA	Rev.ind.	Lang. en
Doc.No. 1MRK006502-FC			Sheet 5
			Cont. 6

Power supply module 110–250 VDC, 100–240 VAC (PSM)

pPSM

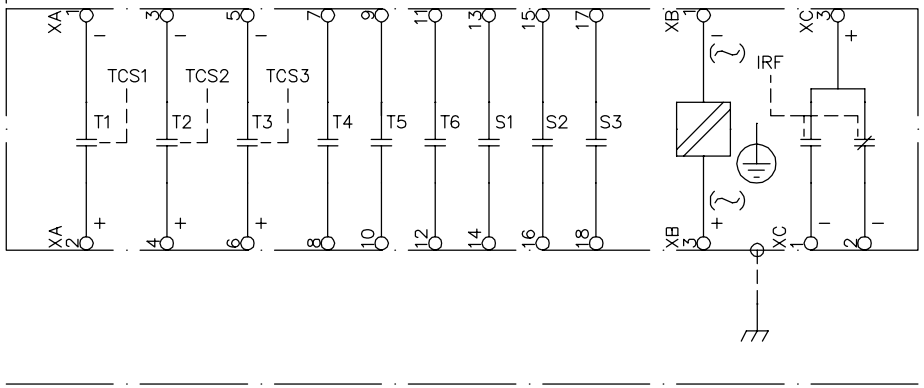

Rack casing	=XA	=XB	=XC
6U, 1/2x19"	X307	X410	X309
3U, 1/1x19"	X317	X420	X319

Observe polarity sequence

Configuration plant adapted

T1	WDG1_BKR_TRIP
T2	WDG2_BKR_TRIP
T3	WDG3_BKR_TRIP
T4	WDG1_BKR_TRIP
T5	WDG2_BKR_TRIP
T6	WDG3_BKR_TRIP
S1	WDG1_PR_TRIP
S2	WDG2_PR_TRIP
S3	WDG3_PR_TRIP
	Auxiliary supply EL
	Protective earth
	Normal
	Fail

Based on	Prepared 2011-08-23	Agneta Rydh	Title Connection Diagram RET650 (3W/1CB) A05A ANSI symbols
	Approved 2011-11-30	Patrik Nyback	
	Project		
Rev / Rev. Note / Date / Name			ABB AB

Doc.des.	Doc.kind	Ref.des.	
Resp.dept.	PSTP/TPLA	Rev.ind.	Lang. en
Doc.No. 1MRK006502-FC			Sheet 6
			Cont. 7

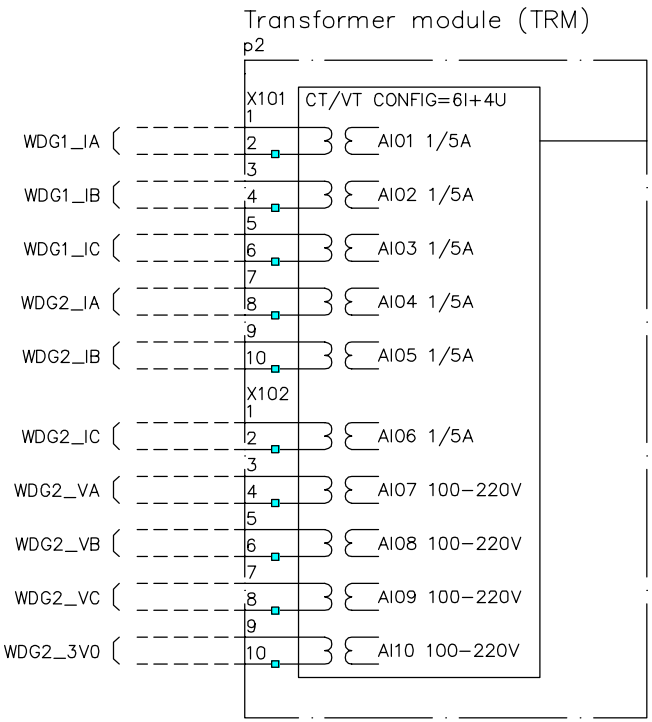

Compression or ringlug terminals

■ Indicates polarity mark. Note that internal polarity can be adjusted by setting of analog input CT neutral direction and or on SMAI pre–processing function blocks.

Based on	Prepared 2011–08–23 Agneta Rydh	Title Connection Diagram RET650 (3W/1CB) A05A ANSI symbols	Doc.des. Doc.kind
	Approved 2011–11–30 Patrik Nyback		Ref.des.
	Project		Resp.dept. PSTP/TPLA Rev.ind.
Rev Rev. Note Date Name		ABB AB	Doc.No. 1MRK006502–FC Lang. en Sheet 7 Cont. 8

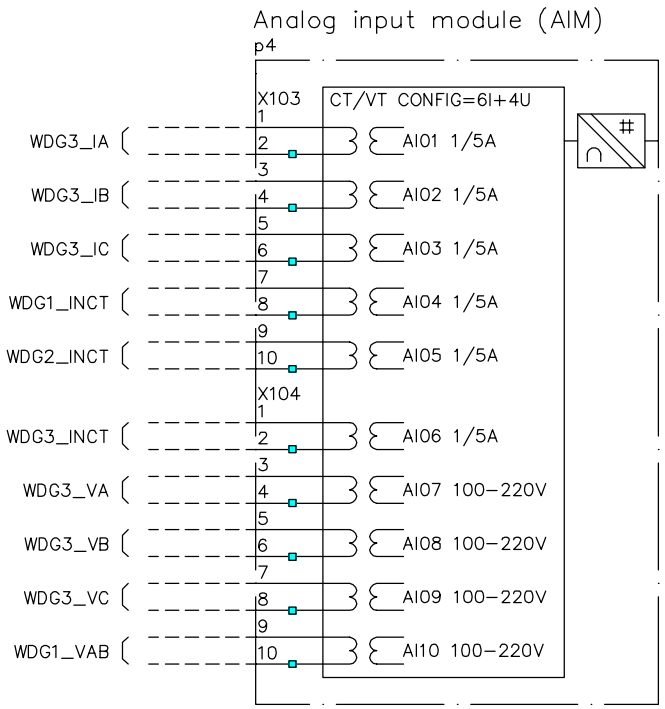

Compression or ringlug terminals

- Indicates polarity mark. Note that internal polarity can be adjusted by setting of analog input CT neutral direction and or on SMAI pre–processing function blocks.

Based on	Prepared 2011–08–23 Agneta Rydh	Title Connection Diagram RET650 (3W/1CB) A05A ANSI symbols	Doc.des. Doc.kind
	Approved 2011–11–30 Patrik Nyback		Ref.des.
	Project		Resp.dept. PSTP/TPLA Rev.ind.
Rev Rev. Note Date Name		ABB AB	Doc.No. 1MRK006502–FC Lang. en Sheet 8 Cont. 9

Binary input/output module (BIO)

p5

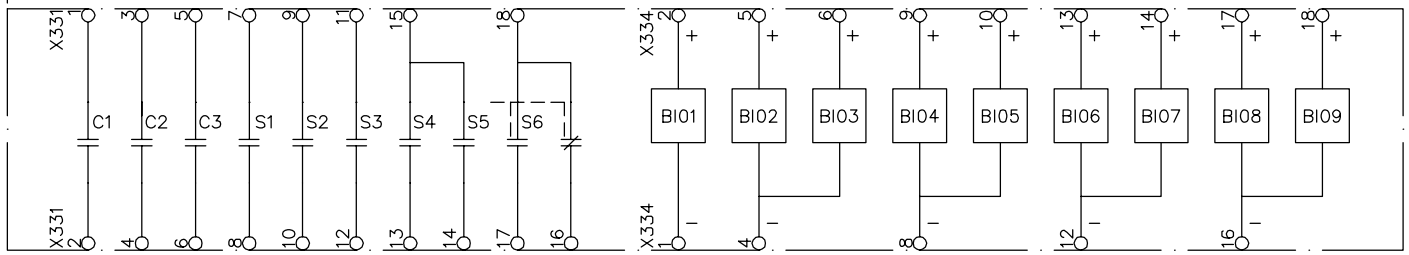

Observe polarity sequence

Configuration plant adapted

C1	SPARE
C2	TC_RAISE_CMD
C3	TC_LOWER_CMD
S1	TC_RAISE_CMD
S2	TC_LOWER_CMD
S3	LTC_TOTBLK
S4	LTC_AUTOBLK
S5	LTC_HUNTING
S6	XFMR_ALARM
BI01	TC_INPROGR
BI02	TC_POS_BCD1
BI03	TC_POS_BCD2
BI04	TC_POS_BCD3
BI05	TC_POS_BCD4
BI06	TC_POS_BCD5
BI07	TC_POS_BCD6
BI08	TC_RAISE
BI09	TC_LOWER

Based on	Prepared 2011-08-23	Agneta Rydh	Title Connection Diagram RET650 (3W/1CB) A05A ANSI symbols
	Approved 2011-11-30	Patrik Nyback	
	Project		

Rev	Rev. Note	Date	Name

ABB AB

Doc.des.	Doc.kind	Ref.des.	
Resp.dept.	PSTP/TPLA	Rev.ind.	Lang. en
Doc.No. 1MRK006502-FC			Sheet 9
			Cont. 10

Binary input/output module (BIO)

p6

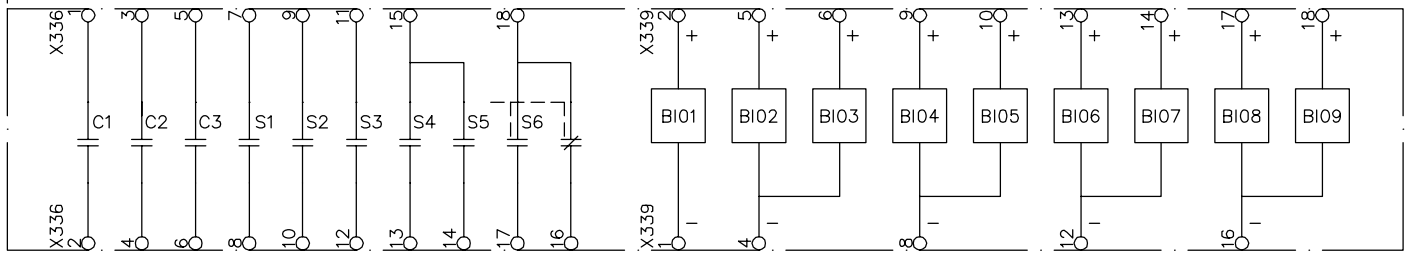

Observe polarity sequence

Configuration plant adapted

C1	WDG1_50BF_TRP
C2	WDG2_50BF_TRP
C3	WDG3_50BF_TRP
S1	87T_TRIP
S2	87N_TRIP
S3	CURRENT_TRIP
S4	VOLTAGE_TRIP
S5	TCS_ALARM
S6	TESTMODE_ACTV
BI01	TC_AUTOCTRL
BI02	WDG1_BKR_CLOS
BI03	SPARE
BI04	WDG2_BKR_CLOS
BI05	WDG2_BKR_OPEN
BI06	WDG3_BKR_CLOS
BI07	SPARE
BI08	OIL_TEMP_ALRM
BI09	WNDG_TMP_ALRM

Based on	Prepared 2011-08-23	Agneta Rydh	Title Connection Diagram RET650 (3W/1CB) A05A ANSI symbols
	Approved 2011-11-30	Patrik Nyback	
	Project		

Rev	Rev. Note	Date	Name

ABB AB

Doc.des.	Doc.kind
Ref.des.	
Resp.dept.	PSTP/TPLA
Rev.ind.	
Lang.	en
Sheet	10
Doc.No.	1MRK006502-FC
Cont.	–