34.5 kV and 69 kV, Type O Plus C II Condenser Bushings Technical Guide

Power and productivity
for a better world™

Table of contents

1 Introduction

The 34.5 kV and 69 kV Type O Plus C II, condenser bushings, replace the Type AB, 34.5 and 69 kV, condenser bushings. The electrical and mechanical characteristics and physical dimensions are unchanged in the transition from Type AB to Type O Plus C II bushing. The change does two things: 1) the Type O Plus C II bushing uses much simpler style numbers (very similar to the standard Type O Plus C bushing) and 2) the Type O Plus C II bushing is not reconfigurable in the field except to change from 800 A draw lead to 1200 A bottom connected or visa versa.

1.1 Style Number

The style number for the 34.5 kV and 69 kV Type O Plus C II condenser bushing will be written as: 034 Z *nnnn αα or 069* Z *nnnn αα where nnnn* is the current rating in amperes except in the case of a dual rated bushing, eg 400 draw lead / 1200 bottom connected which is written as “0412”. The final two characters eg, *αα,* are used by ABB to describe the other characteristics of the bushing. Note that the fourth character “Z” becomes “Y” for brown porcelain.

1.1.1 Style Number Examples

Type O Plus C II Style Number	Replaces	Information
034Z0412UT	1ZUA034012-AAASFSCBA, CA Through CF	Standard 34.5 kV bushing 400 A, draw-lead or 1200 A bottom connect
034Z2000AA	1ZUA034020-AAASGBAXX	Standard 34.5 kV bushing 2000 A, bottom connect
034Z3000AS	1ZUA034030-AAASMBBXX	Standard 34.5 kV bushing 3000 A, bottom connect
034Z1200AE	1ZUA034012-AAASFDAXX	Standard 34.5 kV bushing 1200 A, draw rod
034Z2000AM	1ZUA034020-AAASGDAXX	Standard 34.5 kV bushing 2000 A, draw rod
034Z3000AT	1ZUA034030-AAASMDAXX	Standard 34.5 kV bushing 3000 A, draw rod
069Z0412AN	1ZUA069012-AAASFSCBA, CA THRU CF	Standard 69 kV bushing 400 A, draw-lead or 1200 A bottom connect
069Z2000AA	1ZUA069020-AAASGBAXX	Standard 69 kV bushing 2000 A, bottom connect
069Z3000AX	1ZUA069030-AAASMBBXX	Standard 69 kV bushing 3000 A, bottom connect
069Z1200AF	1ZUA069012-AAASFDAXX	Standard 69 kV bushing 1200 A, draw rod
069Z2000AR	1ZUA069020-AAASGDAXX	Standard 69 kV bushing 2000 A, draw rod

2 Basic Characteristics

2.1 Standards

The Type O Plus C II condenser bushing meets all requirements of the IEEE bushing standards, ie, C57.19.00, C57.19.01, C57.19.100 and IEEE Seismic standard 693 (qualified at HIGH level). These bushings will also meet the electrical, mechanical and thermal requirements of the CSA bushing standard and of IEC 137.

2.2 Ratings

The standard ratings for this family of bushings are as follows:

Parameter	34.5 kV Bushing	69 kV Bushing
Nominal System Voltage	34.5 kV	69 kV
Maximum line-to-ground voltage	22 kV	44 kV
Lighting impulse voltage withstand (BIL)	200 kV	350 kV
Current rating	400 A to 3000 A	400 A to 3000 A
Creep distance	min 44 mm/kV$_{L-G}$ & higher, see outline drawing	
Seismic (IEEE 693) Qualification Level	High	High
For other bushing technical features, please consult the specific bushing outline drawing		

2.3 Features

The 34.5 kV and 69 kV Type O Plus C II bushing is designed to operate under "Usual Service Conditions" as defined in IEEE C57.19.00, *IEEE Standard General Requirements and Test Procedures for Power Apparatus Bushings.* If you require a bushing to operate outside of these defined, "Usual Service Conditions", please contact ABB.

Figure 1

The 34.5 kV and 69 kV Type O Plus C II bushing is of center-clamped construction, ie, the bushing is held together by the action of clamping springs which act on the bushing central conductor and hold the entire bushing assembly under a compressive load. The bushing is built around the central conductor tube on which the condenser body is wound. The upper and lower insulators, mounting flange, flange extension, spring assembly, sight bowl, lower support and clamping nut form an oil tight shell to contain the condenser and insulating oil. O-rings in grooves and/or flat fiber reinforced gaskets create the seals between components. High-grade transformer oil fills the space between the shell and the condenser. This oil is part of the insulating and

cooling systems of the bushing. Above the oil, there is a gas space to provide for thermal expansion of the oil. The gas space is filled with dehydrated nitrogen gas.

The bushing oil level is easily visible in the sight bowl. The sight bowl is prismatic to enhance observation of the oil level. See Figure 1.

The mounting flange and flange extension are high strength corrosion-resistant aluminum.

The upper (air-side) insulator is a one-piece, high quality porcelain with a shed configuration designed for maximum performance. The insulator meets the IEEE requirement for "Heavy Creep" which is 44 mm/ kV_{L-G}. Note that higher creep versions are also available.

The 34.5 kV and 69 kV Type O Plus C II bushings meet or exceed the cantilever test requirements for interchangeable/circuit breaker (TBI) per Table 8 of IEEE standard C57.19.01 – 1991.

2.4 Mounting

Most 34.5 kV and 69 kV Type O Plus C II bushings are suitable for use at angles of up to 60 degrees from the vertical position. You should always verify maximum mounting angle by reviewing the outline drawing.

2.5 Test Tap

The bushing has a test tap which is normally grounded. This tap is connected to an inner foil electrode of the condenser. ABB tests the voltage tap at 2 kV, 50/60 Hz for 1 minute. The maximum continuous service voltage is 600 volts, AC. This tap is grounded under normal operation.

2.6 Installation Instructions

ABB publishes a separate document, which should be followed when installing these bushings. You can download the Installation Guide from our web site or contact ABB for a copy

3 Testing

As part of the manufacturing process, the bushing is subject to a number of routine tests.

3.1 Pressure/Vacuum Tests

Vacuum tightness is performed at nearly a full vacuum and a test is made with an oil over pressure of 41 psig for 6 hours at ambient temperature. No evidence of a leak is permitted.

3.2 Electrical Tests

Each bushing is subject to final electrical tests at ambient temperature with the lower end of the bushing submerged in transformer oil. The power-factor and capacitance are measured and the bushing is subjected to a one-minute power frequency test at a level of one-half the BIL rating. During power frequency testing, the level of partial discharge is carefully monitored. The power-factor and capacitance are also confirmed after the one-minute test.

4 Bushing Loading

4.1 Current Rating & Over Load

The current rating of the 34.5 kV and 69 kV Type O Plus C II bushing indicates the maximum continuous rating of the device without abnormal loss of life.

4.2 Short Circuit Current Rating

The bushing will withstand a short circuit of 25 times rated current for 2 seconds or the I^2t equivalent with the following exceptions:

Draw-lead bushings: short circuit rating is defined by the draw-lead cable

Draw-rod applications have contacts with short circuit ratings of 20 times the continuous rating for not more than 2 seconds and a dynamic peak not to exceed 2.5 times the rms value of the fault.

For short circuit loss of life data relative to the bushing condenser insulation, contact ABB.

4.3 Draw-Lead Application

The sizing of the draw-lead cable is the responsibility of the transformer designer. The maximum rated current for the bushing in the draw-lead application is 400 amperes. The transformer designer must note the inside diameter of the bushing conductor tube because this will limit the choice of cable size. As a service to our transformer customers, we make the following suggestions relative to draw-lead cable size.

Suggested Draw-lead Cable Sizing		
Cable Size (MCM)	Cable Size (mm^2)	Maximum Continuous Current
167	85	265
250	127	350
300	152	400

Note that you must insulate the draw lead cable to isolate it from the internal diameter of the bushing's conductor tube.

4.4 Recommended Positioning

The maximum stresses in the oil at the lower end of the bushing must be limited to those values normal for uninsulated conductors of similar components in the same transformer. The lower insulator must be totally under oil for all operating conditions.

The following recommendations are intended as guidelines only. ABB recommends that specific design calculations be made to verify the proper clearances.

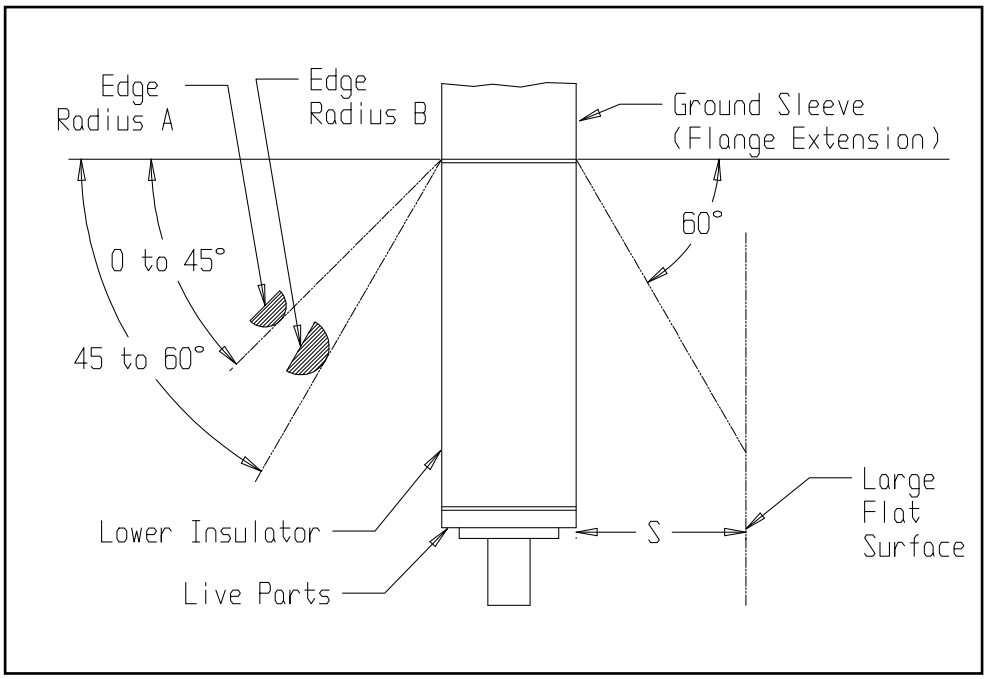

Figure 2

4.4.1 Distance of Grounded Edge from Live Parts

Within the angle of 0°- 45°from the end of the ground sleeve, the "Radius A" shall be a minimum of 0.125" (3.175 mm).

Within the angle of 45°- 60°from the end of the ground sleeve, the "Radius B" shall be a minimum of 0.25" (6.35 mm).

Minimum Electrical Clearances		
	34.5 kV	69 kV
Dimension "S" (inches)	3.25	6.00
Dimension "S" (mm)	83	153

4.4.2 Distance of Grounded Flat Surface from Live Parts

"S" is the minimum distance from bushing live parts to a large surface such as a tank wall or core clamp.

5 Ordering Details

When ordering please specify the following:

- Bushing type and style number
- Current Rating
- Voltage Class and BIL
- Special requirements
- Special Requirements: Any nonstandard requirement, such as impulse tests or high temperature application, must be specified at the time of quotation.

5.1 Draw-lead Connected

If a draw-lead bushing is ordered, it will be shipped with the standard draw-lead connector as shown in Figure 3. In many cases, ABB has other draw-lead connectors. If you cannot use the standard draw-lead connector, please contact ABB for other options.

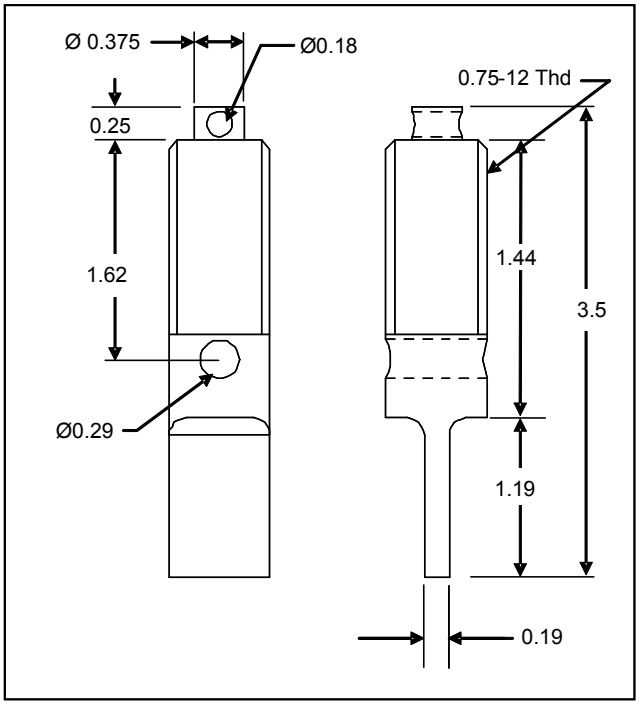

Figure 3

5.2 Bottom Connected

The standard 34.5 kV and 69 kV Type O Plus C II bushing has the IEEE Std C57.19.01-2000 lower end configuration. Connection is made directly to the lower support of the bushing. Figure 5 shows the various lower support configurations for this line of bushings.

5.3 Draw-rod Connected

Draw-rod configurations of 34.5 kV and 69 kV Type O Plus C II bushings are available. Figure 6 shows a typical draw-rod configuration. Bushings that are suitable for draw-rod applications have an opening through the main axis of the bushing conductor and a special bottom end configuration. The draw-rod is pulled through this opening and secured at the top of the bushing. This makes it possible to remove/install bushings without draining the apparatus on which it is applied. With this application, the current is not carried by the rod but is transferred to the bushing conductor at the lower end of the bushing. The bushing's current rating with draw rod is the same as the bushing's current rating when bottom connected.

5.4 Top Terminal Connections

The standard 34.5 kV and 69 kV Type O Plus C II bushings have IEEE Std C57.19.01 top terminals (see Figure 4). The purchaser can order bushings with other terminals if desired. Note that the terminal thread size is: 1.50 - 12 thread for the 400/1200 A and 2000 A bushing and it is 2.00 – 12 thread for the 3000 A bushing.

6 Drawings: Bushing Top End and Bottom End

All dimensions are inches unless otherwise noted.

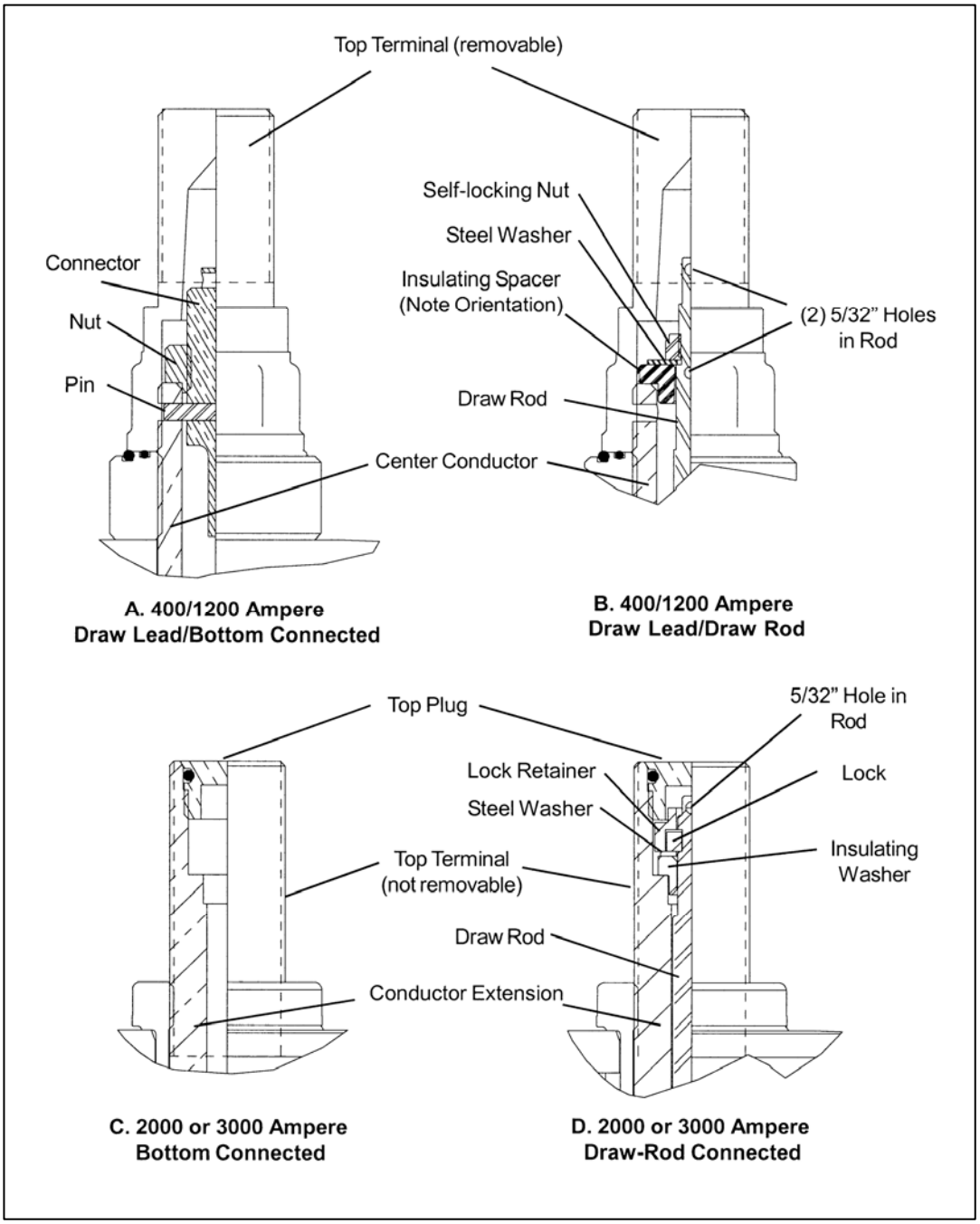
Top Terminal (removable)
Connector
Nut
Pin
Center Conductor
A. 400/1200 Ampere
Draw Lead/Bottom Connected
Self-locking Nut
Steel Washer
Insulating Spacer
(Note Orientation)
(2) 5/32" Holes
in Rod
Draw Rod
B. 400/1200 Ampere
Draw Lead/Draw Rod
Top Plug
Top Terminal
(not removable)
Conductor Extension
C. 2000 or 3000 Ampere
Bottom Connected
5/32" Hole in
Rod
Lock Retainer
Steel Washer
Lock
Insulating
Washer
Draw Rod
D. 2000 or 3000 Ampere
Draw-Rod Connected

Figure 4

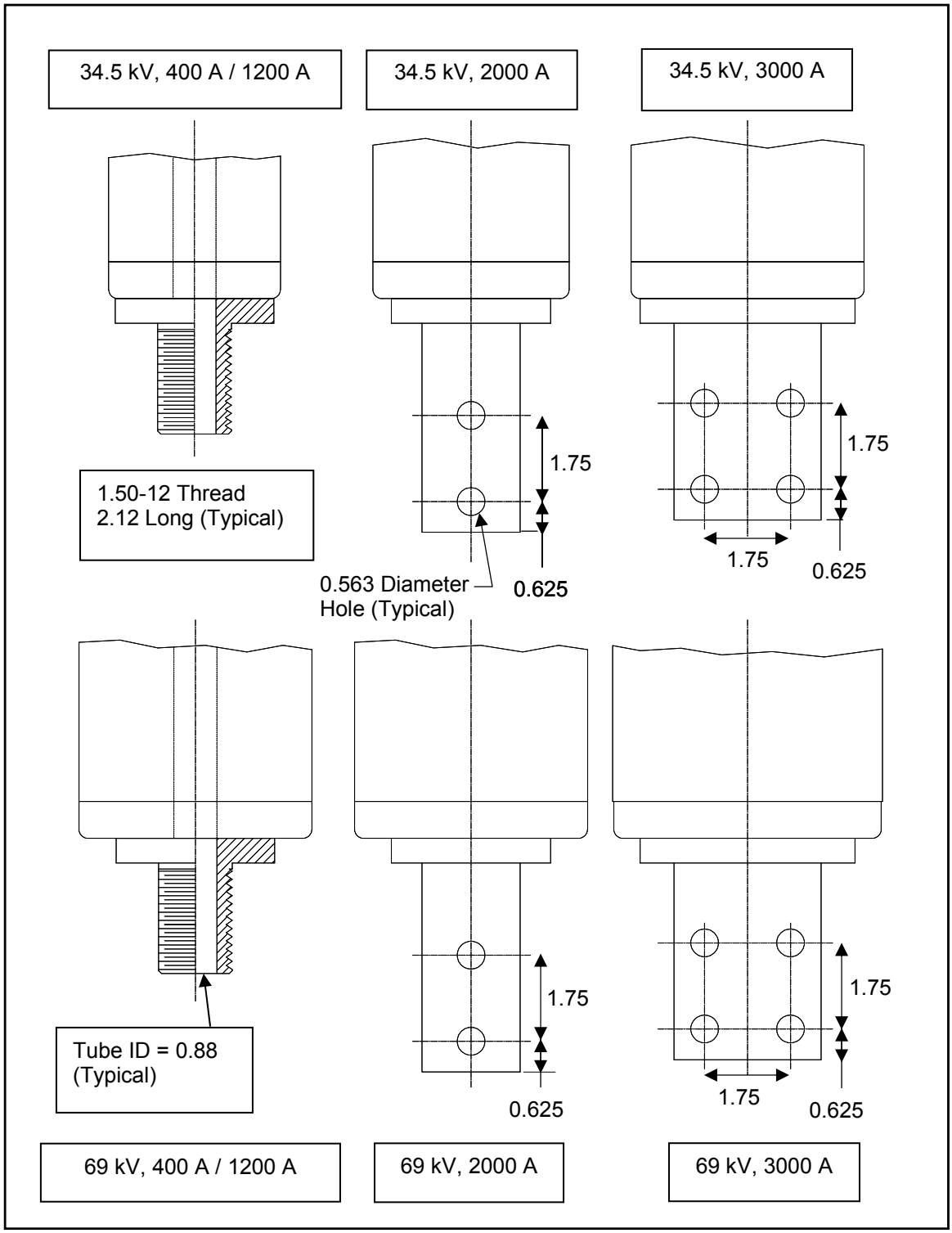
34.5 kV, 400 A / 1200 A
34.5 kV, 2000 A
34.5 kV, 3000 A
1.50-12 Thread
2.12 Long (Typical)
1.75
0.563 Diameter
Hole (Typical)
0.625
1.75
1.75
0.625
Tube ID = 0.88
(Typical)
1.75
0.625
1.75
1.75
0.625
69 kV, 400 A / 1200 A
69 kV, 2000 A
69 kV, 3000 A

Figure 5

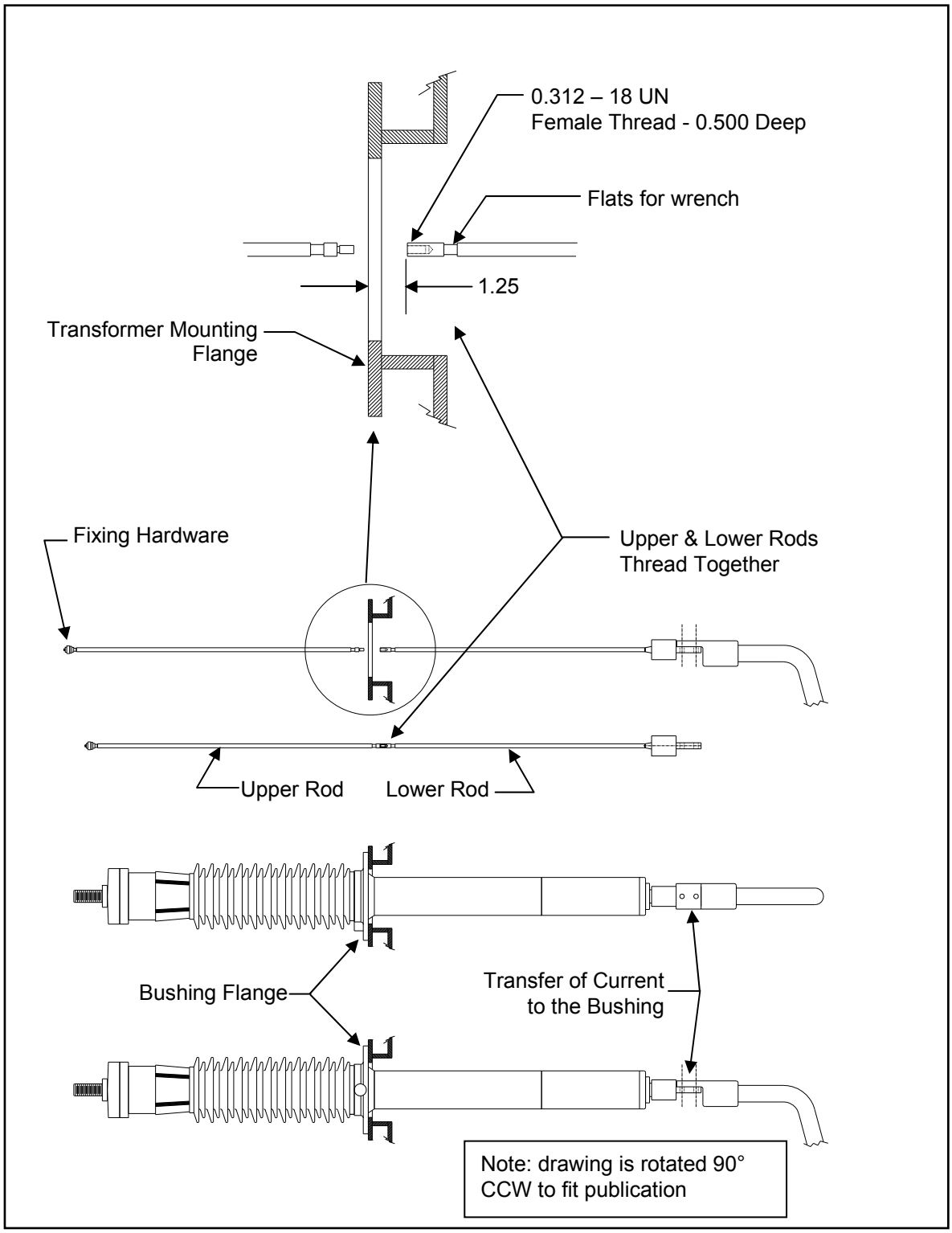
0.312 – 18 UN
Female Thread - 0.500 Deep
Flats for wrench
1.25
Transformer Mounting
Flange
Fixing Hardware
Upper & Lower Rods
Thread Together
Upper Rod
Lower Rod
Bushing Flange
Transfer of Current
to the Bushing
Note: drawing is rotated 90°
CCW to fit publication

Figure 6

Contact us

ABB Inc
Components & Insulation
Product Group
1128 South Cavalier Drive
Alamo, Tennessee 38001, USA
+1 731 696 5561
+1 800 955 8399
Fax: +1 731 696 5377
Email:
Alamo.customer_service@us.abb.com
www.abb.com/electricalcomponents

Power and productivity
for a better world™