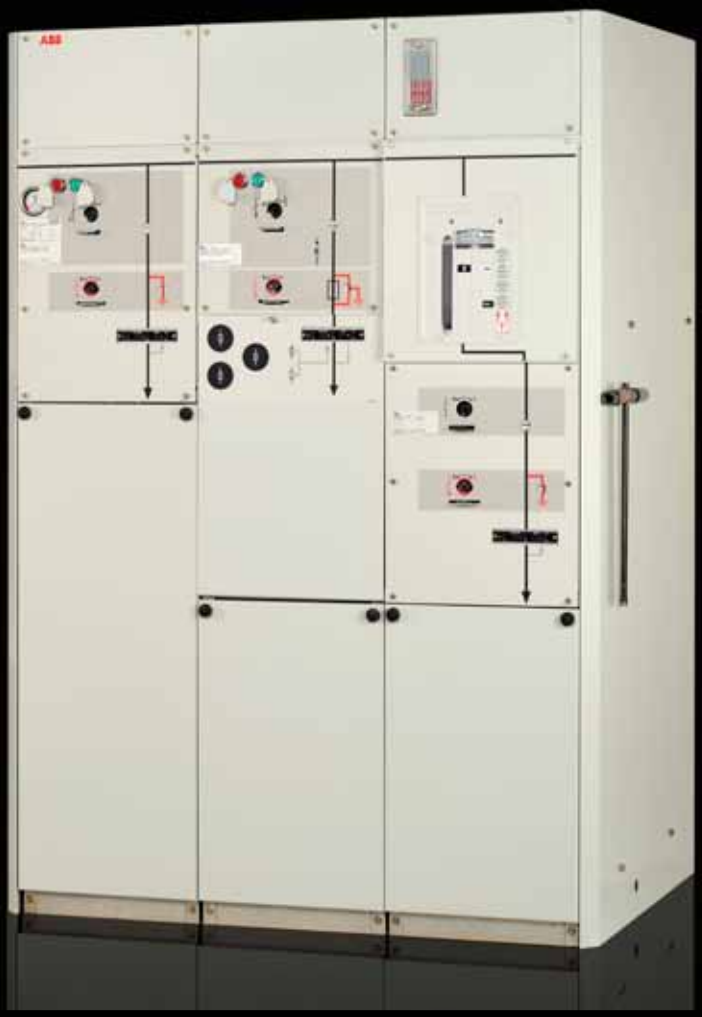

Product catalogue

ABB AS, Power Products Division
SF_6-insulated Ring Main Unit, SafeRing 36 and SF_6-insulated Compact Switchgear SafePlus 36

Power and productivity
for a better world™

Content

Applications SafeRing 36 3
Applications SafePlus 36 5
Design Philosophy 7
SafeRing 36 Configurations 8
Technical data SafeRing 11
SafePlus 36 Modules 12
C - Cable switch 13
F - Switch-fuse disconnector 14
V - Vacuum circuit-breaker 15
D - Direct cable connection 16
De - Direct cable connection with earthing switch 17
M - Metering module 18
Outer assembly 19
Cable switch module 20
Switch-fuse module 21
Vacuum circuit-breaker module 22
Cable bushings 23
Completely sealed enclosure 24
Mechanisms and interlocks 25
Side extension 27
Low voltage compartment 28
Motor operation and coils 29
Transformer protection 32
Fuse selection table - CEF 33
Fuse selection table - SIBA 34
Fuses 35
Relays 36
Combisensors 41
Cable terminations 42
Cable voltage detection / indication 46
Short-circuit indicator 48
Ronis key interlocks 50
Remote control 51
Dimensions 54
Technical data 59
Environmental certification 65
ISO-Certificates 66

Applications SafeRing 36

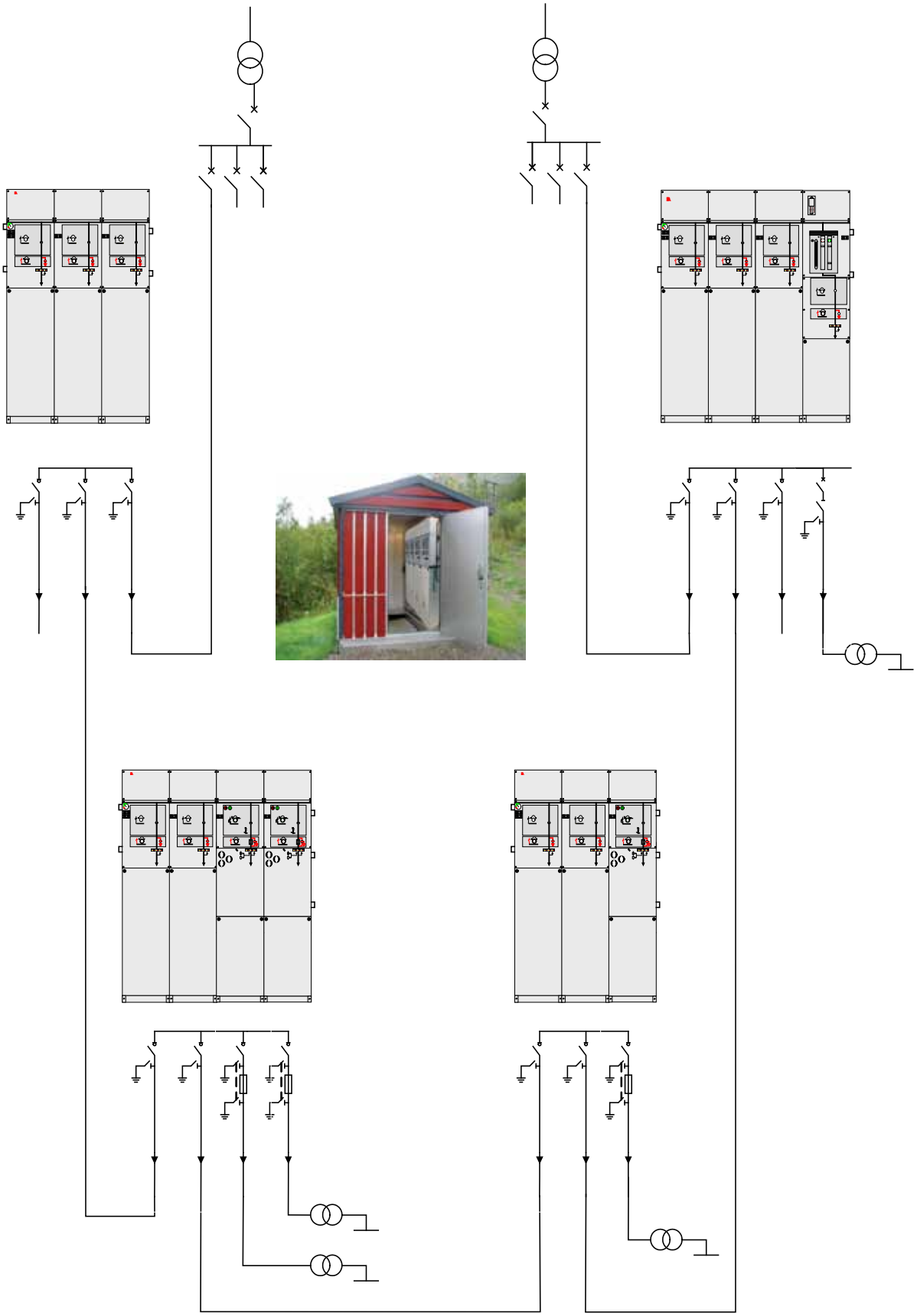

Applications SafeRing 36

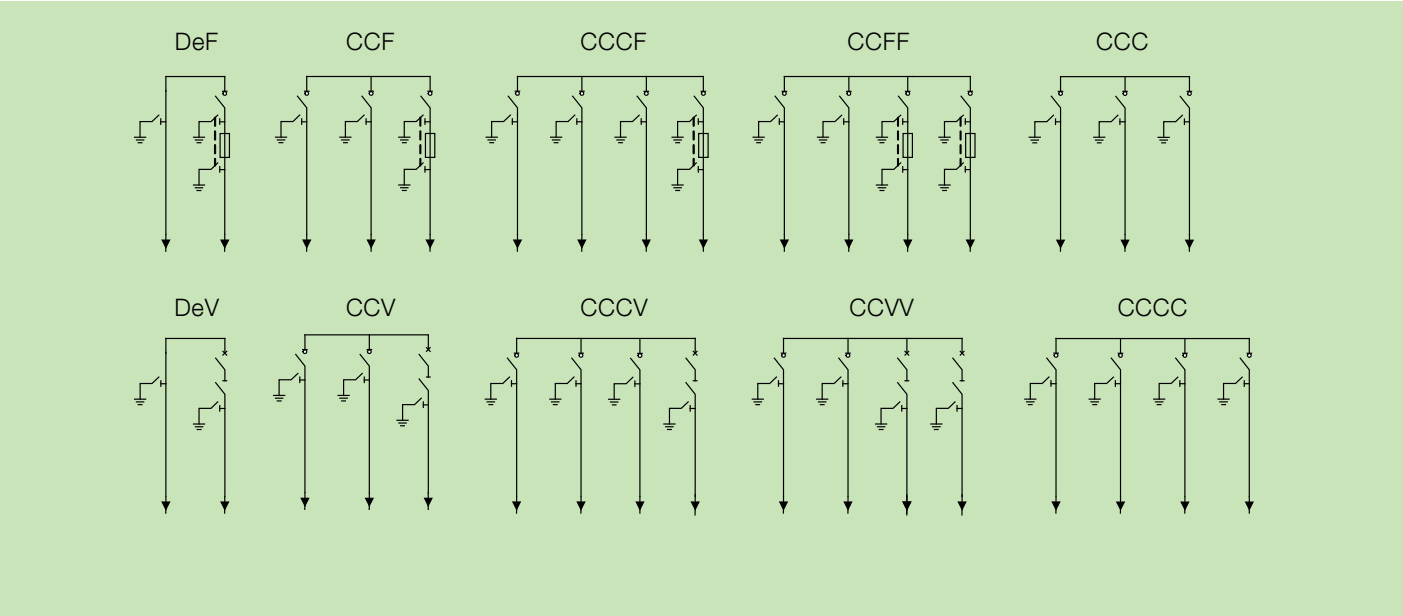

SafeRing 36 is a ring main unit for the secondary distribution network. SafeRing 36 is available in 5 different configurations suitable for most switching applications in 36 and 40,5 kV distribution networks. SafeRing is extendible and can be combined with SafePlus. SafePlus is ABB's flexible compact switchgear. Together they represent a complete solution for 36 kV secondary distribution networks. SafeRing 36 and SafePlus 36 have identical user interfaces.

SafeRing 36 is designed for use in the following applications:
- Compact secondary substations
- Small industries
- Wind power plants
- Hotels, shopping centres, office buildings, business centers etc.

SafeRing 36 is a completely sealed system with a stainless steel tank containing all live parts and switching functions. A hermetically sealed stainless steel tank with constant atmospheric conditions ensures a high level of reliability as well as personnel safety and a virtually maintenance-free system.

C	Cable switch
De	Direct cable connection with earthing switch
F	Switch-fuse-disconnector
V	Vacuum circuit-breaker

Applications SafePlus 36

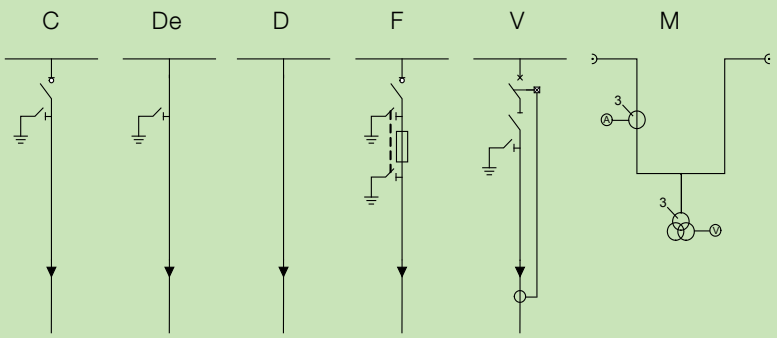

SafePlus 36 is designed for customised application of switchgear in:

- Compact secondary substations
- Small industries
- Wind power plants
- Hotels, shopping centres, office buildings, business centers etc.

C	Cable switch
De	Direct cable connection with earthing
D	Direct cable connection
F	Switch-fuse-disconnector
V	Vacuum circuit-breaker
M	Metering module (air-insulated)

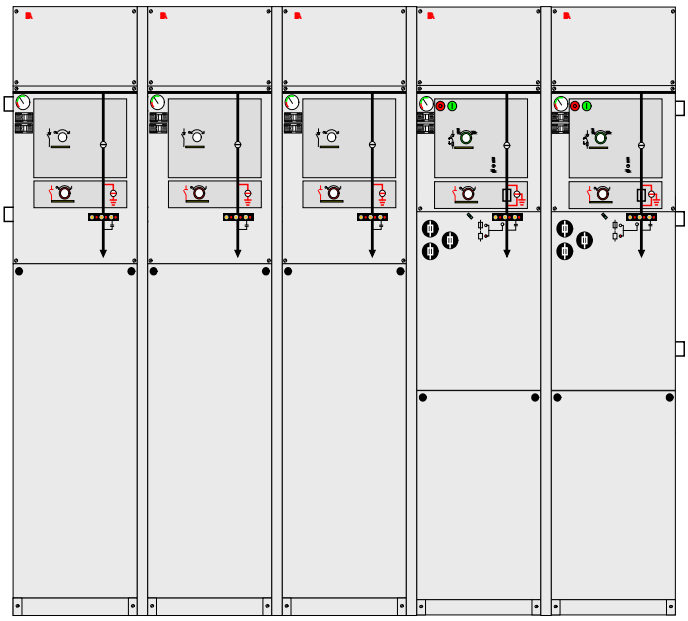

SafePlus 36 compact switchgear in fully modular design, typical configuration:

- 3 pcs.1-way units of cable switches
- 2 pcs 1-way units of switch-fuse-disconnectors

Applications SafePlus 36

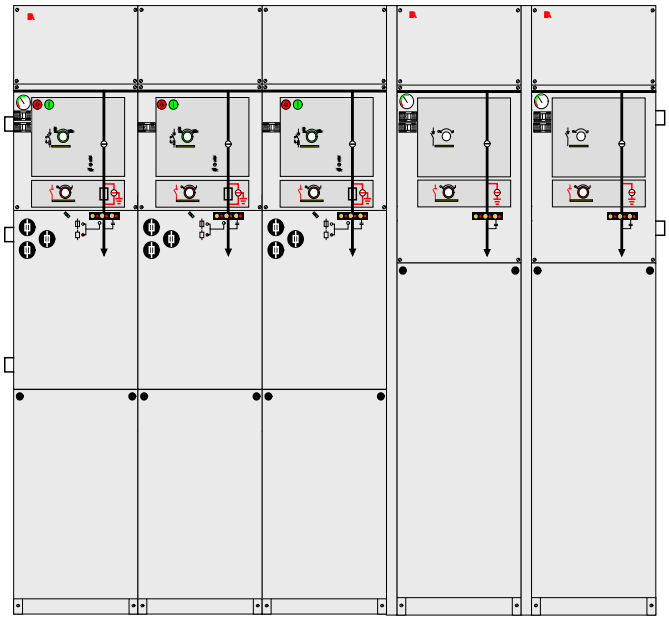

SafePlus 36 compact switchgear, typical configuration:
- 3-way section consisting of 3 modules of switch-fuse-disconnectors
- Extendible with 1 or more 1-way units

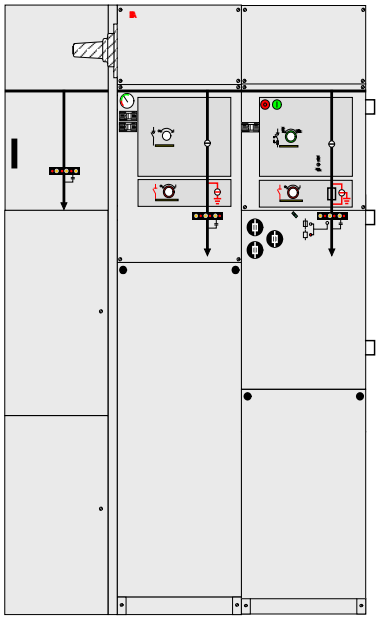

SafePlus 36 compact switchgear, typical windmill configuration:
- 1 pc. 1-way unit of cable switch with cable bushings on left hand side
- 1 pc. 1-way unit of vacuum circuit-breaker

Design Philosophy

SafeRing and SafePlus – ABB switchgears for secondary distribution

Evolution: - more functionality, compact dimensions.
Secondary distribution switchgears have been subject to a significant development the recent 20 years.

The traditional switching cells are substituted with complete switchgear systems. Specific functions such as grounding, disconnecting, cable connections, busbar extension, protection and switching have become integrated features in compact functional units.

Compact switchgear systems fulfils customers MV application requirements. ABB has always taken an active part in this development.

The most unique specialisation is the development of the compact secondary switchgear. The numerous distribution substations requested a unified switching functionality that evolved into the Ring Main Unit concept.

ABB SafeRing range is one major contributor to this specialisation.

Two Products – One range

ABB SafeRing is adapted to the needs in the utility distribution networks.
ABB SafePlus offers more flexibility and electrical capacity.
Both switchgears offer the same user interface.

Customers involvement:

The applied functionality in ABB SafeRing and SafePlus is a result of input from customers all over the world.
Key customers are continuously involved with ABB design staff to ensure optimised switchgear operation.

Personnel – safety operation

All products are designed and manufactured in compliance with ISO 9001, ISO 14001 and ISO 18001.The latest edition of relevant IEC standards will always apply to our continuous test programme.
Safety is not only a specification and rating issue, but also a real life experience.
All units are factory routine tested according to international standards. ABB takes this further to be an objective related to durability and repetitive manufacturing quality.
Features for further enhancing personnel safety are available.
“Integrated functionality” is a key objective to reduce the number of moving components, further reducing the risk of any mechanical defect.

We are responsible for the environment

The location for manufacturing SafeRing and SafePlus is Norway. Green policy assures focus on environmental factors in manufacturing as well as over the switchgear’s life span.

All products are manufactured in accordance with our ISO 14001 certification. Materials are carefully selected, to ensure reuse at end of life. Recycling capability is 89% (for details see chapter 10).
To facitilitate the recycling process we continuously work along with our partners to improve end of life handling.

Modern - development and manufacturing

Numerical simulations together with long experience ensure reliable and safe, compact and robust design.

Dielectric simulations ensure that compactness does not influence the dielectrical capability.

The combination of design techniques, experience and the most modern production technology guarantee state of the art products and durability.

Complete solutions – one supplier

Complex applications involving remote control and monitoring can be supplied from ABB.

This makes large scale implementation feasible, and will simplify engineering and procurement.

SafeRing 36 Configurations

SafeRing CCF

General

SafeRing 36 is an extendible ring main unit for the secondary distribution network. SafeRing 36 is available in 10 different configurations suitable for most switching applications up to 40,5 kV distribution networks.

SafeRing 36 is a completely sealed system with a stainless steel tank containing all live parts and switching functions. The sealed steel tank with constant atmospheric conditions ensures a high level of reliability, personnel safety and a virtually maintenance-free system.

The SafeRing 36 concept offers a choice between switch-fuse combination or circuit-breaker in combination with relay for protection of the transformer.
SafeRing 36 can be supplied with integrated remote control and monitoring unit.

SafeRing 36 is supplied with the following standard equipment

- Vacuum circuit-breaker
- Two-position load break puffer switch
- Earthing switch with single spring operating mechanism
- Switch position indication for load break switch and earthing switch
- Single spring operating mechanism on cable switches
- Two-position mechanism with auto-reclosing duty for vacuum circuit-breaker
- Double spring operating mechanism on switch-fuse-disconnectors
- Cable bushings horizontal in front, 400 series bolted with integrated voltage divider for voltage indication
- Busbars, 630A
- Earthing bar
- Operating handle
- Lifting lugs for easy handling
- Adjustable cable support bars
- Manometer for SF_6 pressure

Factory assembled options

- Bushings for extension busbar
- Interlocking
  - Cable compartment front cover interlocked with earthing switch
- Signal (1NO) from internal pressure indicator wired to terminals (one each SF_6-enclosure)

Additional equipment also available as retrofit

- Integrated control and monitoring unit (ICMU)
- Motor operation
- Trip coil open
- Trip coil open and close
- Aux. switch for load break switch 2NO + 2NC
- Aux. switch for earth switch 2NO + 2NC
- Aux. switch for fuse blown 1NO
- Aux. switch for vacuum circuit-breaker 2NO+2NC
- Capacitive voltage indication
- Short circuit indicator
- Cable cover for parallel cables
- Ronis key interlocking system, EL 11 AP
- Current measuring
- Sidewalls - painted

SafeRing 36 Configurations

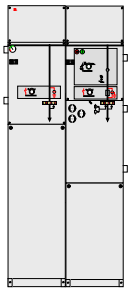

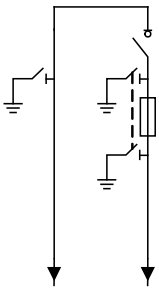

DeF

Depth: 900 mm
Width: 910 mm
Height: 1930 mm

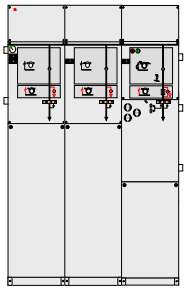

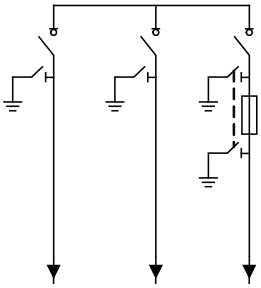

CCF

Depth: 900 mm
Width: 1330 mm
Height: 1930 mm

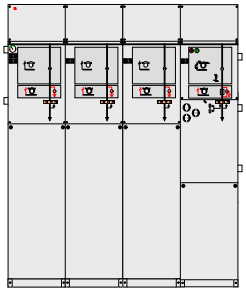

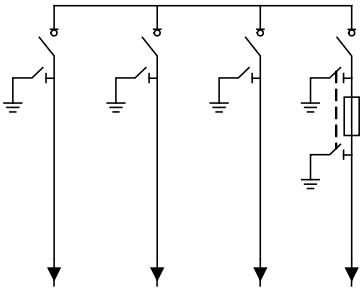

CCCF

Depth: 900 mm
Width: 1750 mm
Height: 1930 mm

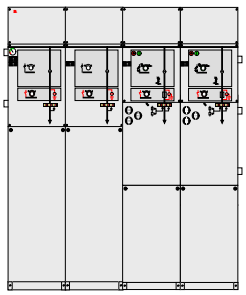

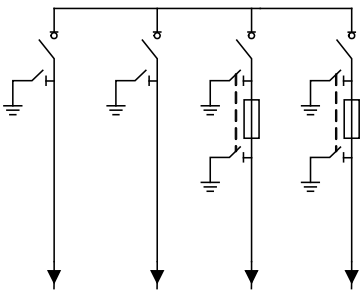

CCFF

Depth: 900 mm
Width: 1750 mm
Height: 1930 mm

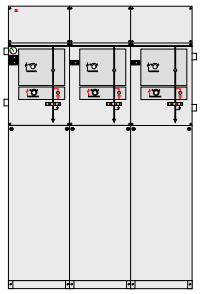

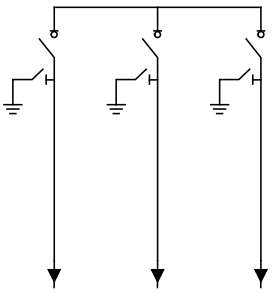

CCC

Depth: 900 mm
Width: 1330 mm
Height: 1930 mm

SafeRing 36 Configurations

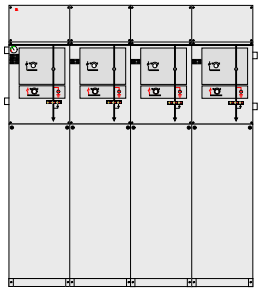

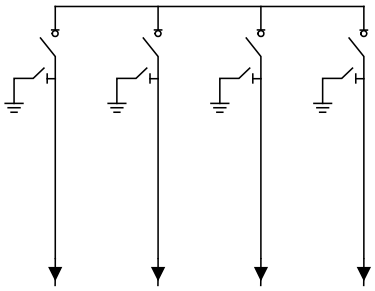

CCCC

Depth: 900 mm
Width: 1750 mm
Height: 1930 mm

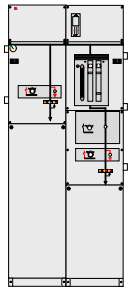

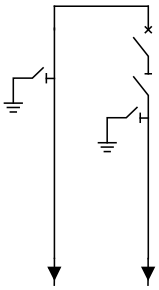

DeV

Depth: 900 mm
Width: 910 mm
Height: 1930 mm

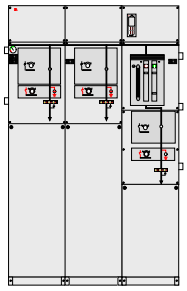

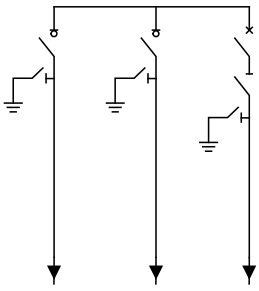

CCV

Depth: 900 mm
Width: 1330 mm
Height: 1930 mm

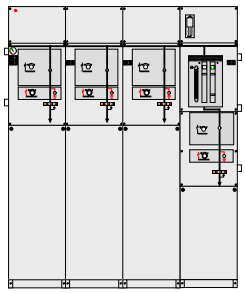

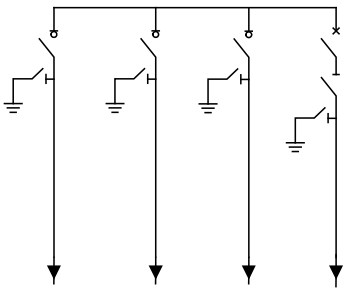

CCCV

Depth: 900 mm
Width: 1750 mm
Height: 1930 mm

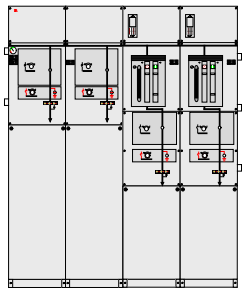

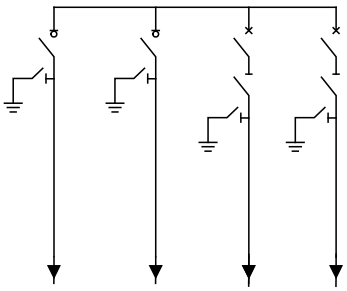

CCVV

Depth: 900 mm
Width: 1750 mm
Height: 1930 mm

Technical data SafeRing

SafeRing 36		C-module		F-module		V-module	
		Switch disconnector	Earthing switch	Switch-fuse disconnector	Downstream earthing switch	Vacuum circuit-breaker	Earthing switch/ disconnector
Rated voltage	kV	36/38,5/40,5	36/38,5/40,5	36/38,5/40,5	36/38,5/40,5	36/38,5/40,5	36/38,5/40,5
Power frequency withstand voltage	kV	70/80/95	70/80/95	70/80/95	70/80/95	70/80/95	70/80/95
- across disconnector	kV	80/95/110		80/95/110			80/95/110
Lightning impulse withstand voltage	kV	170/180/185	170/180/185	170/180/185	170/180/185	170/180/185	170/180/185
- across disconnector	kV	195/210/215		195/210/215			195/210/215
Rated normal current	A	630/630/630[1]		200/200/200[2]		630/630/630[1]	
Breaking capacities:							
- active load	A	630/630/630		200/200/200			
- closed loop	A	630/630/630		200/200/200			
- off load cable charging	A	20/21/21		20/21/21		50/50/50 (Class C1)	
- earth fault	A	60/63/63		60/63/63			
- earth fault cable charging	A	35/36/36		35/36/36			
- transfer current	A			840/750/750			
- short-circuit breaking current	kA			see[3]		20/20/20	
						(Class E1,S1)	
Making capacity	kA	50/50/50 (5 times)	50/50/50 (5 times)	see[3]	2,5/2,5/2,5 (5 times)	50/50/50	50/50/50
Class (Electrical endurance)		E3/E2/E2	E2/E2/E2	- / -	E2/E2/E2	E1/E1/E1	E2/E2/E2
Short time current 1 sec. [4]	kA	16/16/16	16/16/16		1/1/1	16/16/16	16/16/16
Short time current 3 sec.	kA	16/16/16	16/16/16	see[3]		16/16/16	16/16/16
Internal arc classification IAC AFL, 1s	kA	20/20/20		20/20/20		20/20/20	

[1] 400A for bushings Interface B (400 series plug-in)
[2] Depending on the current rating of the fuse-link
[3] Limited by high voltage fuse-links
[4] Maximum rating for bushings Interface B (400 series plug-in)

SafeRing 36 is tested according to IEC publications IEC 60265-1, IEC 62271-100, -102, -105, -200, IEC 60529 and IEC 60694 for 36 and 38,5 kV. For 40,5 kV, testing is according to GB standards.

SafePlus 36 Modules

SafePlus CF+C

General

SafePlus 36 is a metal enclosed compact switchgear system for up to 40,5 kV distribution applications. The switchgear has a unique flexibility due to its extendibility and the possible combination of fully modular and semi modular configurations.

SafePlus 36 is a completely sealed system with a stainless steel tank containing all the live parts and switching functions.

The sealed steel tank with constant atmospheric conditions ensures a high level of reliability, personnel safety and a virtually maintenance-free system. As an option a SafePlus switchgear can be equipped with a set of busbar connections left/right in order to obtain extention or full modularity.
The external busbar kit has to be mounted to the switchgears on site.

The SafePlus 36 system offers a choice between switch-fuse combination or circuit-breaker in combination with relay for protection of the transformer.

SafePlus can also be supplied with or retrofitted with remote control and monitoring equipment.

SafePlus 36 is supplied with the following standard equipment:

- Operating handle
- Lifting lugs for easy handling
- Busbars, 630 A
- Earthing bar
- Adjustable cable support bars
- Manometer for SF_6 pressure

Factory assembled options

- Bushings for extension busbar
- Signal (1NO) from internal pressure indicator wired to terminals (one each SF_6-enclosure)

Additional equipment also available as retrofit

- Integrated control and monitoring unit (ICMU)
- Sidewalls - painted

C - Cable switch

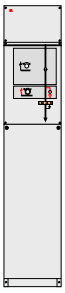

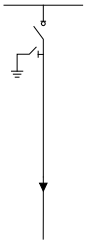

Depth: 900 mm
Width: 420 mm
Height: 1930 mm *)

*) Height with high LV-compartment: 2180 mm

Standard features

- Two-position load break puffer switch and separate earthing switch
- Two-position single spring operating mechanisms with two separate operating shafts for load break function and earthing function
- Switch position indication for load break switch and earthing switch
- Cable bushings horizontal in front, 400 series bolted with integrated voltage divider for voltage indication
- Cable compartment cover allowing double cable connec tion cable adapters by using nkt cables adapters
- Busbars, 630A
- Earthing bar

Factory assembled options

- Interlocking
  Cable compartment front cover interlocked with earthing switch

Additional equipment also available as retrofit

- Motor operation for load break switch
- Auxiliary switches
- Load break switch position 2NO+2NC
- Earthing switch position 2NO+2NC
- Capacitive voltage indicator
  VPIS acc. to IEC 61958 with integrated indicator lamps (LED)
  HR- module (VDS) acc. to IEC 61243-5
- Short circuit indicators
  Horstmann Alpha/E
  Horstmann Alpha/M
  Horstmann Sigma
- Short circuit and earth fault indicator Horstmann Sigma F+E
- Cable cover for parallel cables
- External current transformers (CT)
- Ronis key interlock

Technical data				
Switch disconnector				
Rated voltage	kV	36	38,5	40,5 *)
Power frequency withstand voltage	kV	70	80	95
- across disconnector	kV	80	95	110
Lightning impulse withstand voltage	kV	170	180	185
- across disconnector	kV	195	210	215
Rated normal current	A	630	630	630
Breaking capacities:				
- active load	A	630	630	630
- closed loop	A	630	630	630
- off load cable charging	A	20	21	21
- earth fault	A	60	63	63
- earth fault cable charging	A	35	36	36
Making capacity	kA	50 (5 times)	50 (5 times)	50 (5 times)
Class (Electrical endurance)		E3	E2	E2
Short time current 1 sec. **)	kA	20	20	20
Short time current 3 sec.	kA	20	20	20
Internal arc classification IAC AFL, 1 sec	kA	20	20	20
Number of mechanical operations	1000 close / open manual			
Earthing switch				
Rated voltage	kV	36	38,5	40,5
Power frequency withstand voltage	kV	70	80	95
Lightning impulse withstand voltage	kV	170	180	185
Making capacity	kA	50 (5 times)	50 (5 times)	50 (5 times)
Short time current 1 sec. **)	kA	20	20	20
Short time current 3 sec.	A	20	20	20
Class (Electrical endurance)		E2	E2	E2
Number of mechanical operations	1000 close / open manual			

*) For 40,5 kV, testing is according to GB standards

**) optional 25kA

F - Switch-fuse disconnector

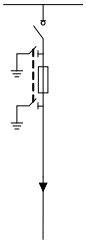

Depth: 900 mm
Width: 420 mm
Height:1930 mm *)

*) Height with high LV-compartment: 2180 mm

Standard features

- Fuse/transformer rating: 36 kV, max 63 A fuse-links
- Integrated load break switch two-position and separate upstream earthing switch mechanically linked with downstream earthing switch
- Switch position indication for switch-fuse-disconnector and earthing switches
- Double spring mechanism for switch-fuse-disconnector with two separate operating shafts for loadbreak function and earthing function
- Fuse canisters for DIN type fuse-links. Only accessible when earthing switch is closed
- Fuse tripping arrangement
- Optical fuse trip indication
- Cable bushings horizontal in front, 400 series boltes with integrated voltage divider for voltage indication
- Cable compartment allowing double cable connection
- Main busbars, 630 A
- Earthing bar

Factory assembled options

- Interlocking
  - Cable compartment front cover interlocked with earthing switch

Additional equipment also available as retrofit

- Motor operation for switch-fuse-disconnector
- Trip coil open
- Trip coil open and close
- Auxiliary switches :
  - Switch-fuse-disconnector position 2NO+2NC
  - Earthing switch position 2NO+2NC
  - Fuse blown 1 NO
- Capacitive voltage indicator
  - VPIS acc. to IEC 61958 with integrated indicator lamps (LED)
  - HR- module (VDS) acc. to IEC 61243-5
- Ronis key interlock on earthing switch

Technical data				
Switch-fuse disconnector				
Rated voltage	kV	36	38,5	40,5 *)
Power frequency withstand voltage	kV	70	80	95
- across disconnector	kV	80	95	110
Lightning impulse withstand voltage	kV	170	180	185
- across disconnector	kV	195	210	215
Rated normal current	A	200 1)	200 1)	200 1)
Breaking capacities:				
- active load	A	200	200	200
- closed loop	A	200	200	200
- off load cable charging	A	20	21	21
- earth fault	A	60	63	63
- earth fault cable charging	A	35	36	36
- transfer current	A	840	750	750
Making capacity	kA	see 3)	see 3)	see 3))
Internal arc classification IAC AFL, 1s	kA	20	20	20
Number of mechanical operations	1000 close / open manual			
Upstream earthing switch				
Rated voltage	kV	36	38,5	40,5
Power frequency withstand voltage	kV	70	80	95
Lightning impulse withstand voltage	kV	170	180	185
Making capacity	kA	50	50	50
Class (Electrical endurance)		E2	E2	E2
Short time current 1 sec. **)	kA	20	20	20
Number of mechanical operations	1000 close / open manual			
Downstream earthing switch				
Rated voltage	kV	36	38,5	40,5
Power frequency withstand voltage	kV	70	80	95
Lightning impulse withstand voltage	kV	170	180	185
Making capacity	kA	2,5 (5 times)	2,5 (5 times)	2,5 (5 times)
Class (Electrical endurance)		E2	E2	E2
Short time current 1 sec	kA	1	1	1
Number of mechanical operations	1000 close / open manual			

*) For 40,5 kV, testing is according to GB standards
**) Optional 25kA

1) Depending on the current rating of the fuse-link
2) Limited by high voltage fuse-links

V - Vacuum circuit-breaker

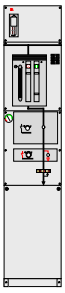

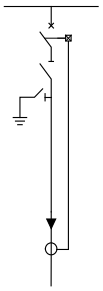

Depth: 900 mm
Width: 420 mm
Height: 1930 mm *)

*) Height with high LV-compartment: 2180 mm

Standard features

- 630A vacuum circuit-breaker
- two position mechanism with auto-reclosing duty for vacuum circuit breaker
- two position operating mechanisms for the downstream disconnector and earthing switch
- interlocking between vacuum circuit-breaker and disconnector
- switch position indication for vacuum circuit-breaker, disconnector and earthing switch
- self powered electronic protection relay ABB type REJ603 with ring core CTs on cables
- trip coil (for relay tripping)
- cable bushings horizontal in front, Interface C (400 series bolted) with integrated capacitor for voltage indication
- cable compartment cover allowing double cable connection
- main busbar, 630A
- earthing bar

Factory assembled options

- cable bushings Interface B (400 series plug-in)
- bushings for connection of external busbars or cable on
  - Interface 2 (inside cone)
  - Interface B (400 series plug-in)
  - Interface C (400 series bolted)
- interlocking
- cable compartment front cover interlocked with earthing switch
- signal (1NO) from internal pressure indicator wired to terminals (only one each SF_6 tank)

Additional equipment also available as retrofit

- manometer
- motor operation for vacuum circuit-breaker
- high LV-compartment with hinged door
- short circuit indicator
- auxiliary switches
  - vacuum circuit-breaker position 2NO+2NC
  - disconnector position 2NO+2NC
  - earthing switch position 2NO+2NC
  - vacuum circuit-breaker tripped signal 1NO

Technical data				
Vacuum circuit-breaker				
Rated voltage	kV	36	38,5	40,5 *)
Power frequency withstand voltage	kV	70	80	95
Lightning impulse withstand voltage	kV	170	180	185
Rated normal current	A	630	630	630
Breaking capacities:				
- short circuit breaking current (Class E1,S1)	kA	20	20	20
- D.C. component	%	41	33	33
- cable charging breaking current (Class C1)	A	50	50	50
Making capacity	kA	50	50	50
Short time current 1 sec. 1)	kA	16	16	16
Short time current 3 sec.	kA	20	20	20
Internal arc classification IAC AFL, 1 sec	kA	20	20	20
Rated operating sequence	O - 0,3s - CO - 15s - CO			
Number of mechanical operations	2000 (class M1)			
Downstream disconnector and earthing switch				
Rated voltage	kV	36	38,5	40,5
Power frequency withstand voltage	kV	70	80	95
- across disconnector	kV	80	95	110
Lightning impulse withstand voltage	kV	170	180	185
- across disconnector	kV	195	210	215
Making capacity	kA	50	50	50
Class (Electrical endurance)		E2	E2	E2
Short time current 1 sec.	kA	20	20	20
Internal arc classification IAC AFL, 1 sec	kA	20	20	20
Number of mechanical operations	1000 close / open manual			

*) For 40,5 kV, testing is according to GB standards
**) Optional 25kA
1) Maximum rating for bushings Interface B (400 series plug-in)

- capacitive voltage indicating systems
  - HR-module (Voltage Detecting System, VDS, acc. to IEC 61243-5)
  - VPIS (Voltage Presence Indicating System, acc. to IEC 61958) with integrated indicator lamps
- indicator lamp for HR-module, 1-phase VIM-1
- indicator lamp for HR-module, 3-phase VIM-3
- trip coil open
- trip coil open and close
- undervoltage release (optional electronic time delay device)
- cable compartment cover
  - with extra depth (surge arrestor)
  - arc proof (if existing modules have interlocked covers)
- Ronis key interlock on disconnector/earthing switch

Relays with auxiliary voltage

REF 610 (Integrated LV-compartment with hinged door)
REF 615 (Integrated LV-compartment with hinged door)
REF 541 (High LV-compartment with hinged door)
REF 542+ (High LV-compartment with hinged door)

D - Direct cable connection

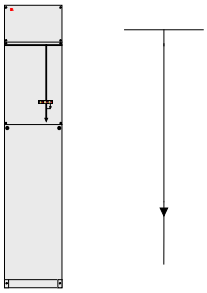

Depth: 900 mm
Width: 420 mm
Height:1930 mm *)

*) Height with high LV-compartment: 2180 mm

Technical data				
Direct cable connection				
Rated voltage	kV	36	38,5	40,5 *)
Power frequency withstand voltage	kV	70	80	95
Impulse withstand voltage	kV	170	180	185
Rated normal current	A	630	630	630
Short time current 1 sec. **)	kA	20	20	20
Short time current 3 sec.	kA	20	20	20

*) For 40,5 kV, testing is according to GB standards
**) Optional 25kV

Standard features

- Cable bushings horizontal in front, Interface C (400 series bolted) with integrated capacitor for voltage indication
- Busbar, 630 A
- Earthing bar

Factory assembled options

- Bushings for connection of external busbars on side of the unit
- Cable bushings Interface B (400 series plug-in, In = 400A)
- Signal (1NO) from internal pressure indicator wired to terminals (only one each SF_6-tank)

Optional features also available as retrofit

- Low voltage compartment
- Capacitive voltage indicating systems
  - HR-module (Voltage Detecting System, VDS, acc to IEC 61243-5)
  - VPIS (Voltage Presence Indicating System, acc. to IEC 61958) with integrated indicator lamps
- Indicator lamp for HR-module, 1-phase VIM-1
- Indicator lamps for HR-module, 3-phase VIM-3
- Short-circuit indicators
  - Horstmann Alpha/E
  - Horstmann Alpha/M
  - Horstmann Sigma
- Short circuit and earth fault indicator Horstmann Sigma F+E
- External current sensors (CT) for monitoring
- Cable compartment cover
  - with extra depth (double cable, surge arresters)
  - arc proof (if existing modules have interlocked cable compartment)

De - Direct cable connection with earthing switch

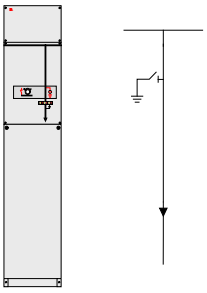

Depth: 900 mm
Width: 420 mm
Height: 1930 mm *)

*) Height with high LV-compartment: 2180 mm

Technical data				
Direct cable connection with earthing switch				
Rated voltage	kV	36	38,5	40,5 *)
Power frequency withstand voltage	kV	70	80	95
Impulse withstand voltage	kV	170	180	185
Rated normal current	A	630	630	630
Making capacity	kA	50	50	50
Short time current 1 sec. **)	kA	20	20	20
Short time current 3 sec.	kA	20	20	20
Number of mechanical operations	1000 close / open manual			

*) For 40,5 kV, testing is according to GB standards
**) Optional 25kA

Standard features

- Earthing switch
- Two-position single spring mechanism
- Switch position indication
- Cable bushings horizontal in front, Interface C (400 series bolted) with integrated capacitor for voltage indication
- Busbar, 630 A
- Earthing bar

Factory assembled options

- Bushings for connection of external busbars on side of the unit
- Cable bushings Interface B (400 series plug-in, In = 400A)
- Interlocking
  - Cable compartment front cover interlocked with earthing switch
- Signal (1NO) from internal pressure indicator wired to terminals (only one each SF_6-tank)

Optional features also available as retrofit

- Low voltage compartment
- Capacitive voltage indicating systems
  - HR-module (Voltage Detecting System, VDS, acc to IEC 61243-5)
  - VPIS (Voltage Presence Indicating System, acc. to IEC 61958) with integrated indicator lamps
- Indicator lamp for HR-module, 1-phase VIM-1
- Indicator lamps for HR-module, 3-phase VIM-3
- Short-circuit indicators
  - Horstmann Alpha/E
  - Horstmann Alpha/M
  - Horstmann Sigma
- Short circuit and earth fault indicator Horstmann Sigma F+E
- External current sensors (CT) for monitoring
- Cable compartment cover
  - with extra depth (double cable, surge arresters)
  - arc proof (if existing modules have interlocked cable compartment)
- Auxiliary switches
  - Earthing switch position 2NO+2NC

M - Metering module

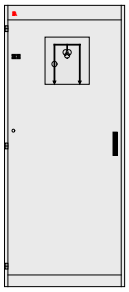

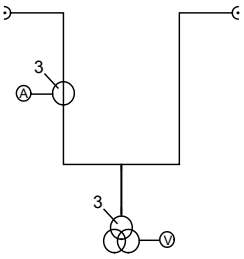

Technical data			
Metering module			
Rated voltage	kV	36	38,5
Power frequency withstand voltage	kV	70	80
Impulse withstand voltage	kV	170	180
Rated normal current	A	630	630
Short time current 1 sec.	kA	20	20

Depth: 1100 mm
Width: 880 mm
Height:1930 mm *)

*) Height with high LV-compartment:
2280 mm

The M-module is a factory assembled type tested air insulated metering cubicle with conventional CTs and VTs.
The M-module is designed for CTs and VTs with dimensions according to DIN 42600 Narrow type and for installation of transformers locally.

The M-module is manufactured and tested according to IEC 62271-200. It is available in 4 versions:
- Bottom cable in/out
- Left side top connection to SafePlus modules, bottom cable in
- Right side top connection to SafePlus modules, bottom cable in
- Left and right side connection to SafePlus modules

Standard features
- 3 pcs DIN 42600 Narrow type current transformers with ribs
- 3 pcs DIN Narrow type single pole voltage transformers
- Padlock interlocking to prevent access to live parts
- MV cable connection to SafePlus cubicle using Elastimold, 3M, Pirelli, Raychem, Kabeldon, etc. connectors
- MV cable connection inside M-module by conventional cable lugs

Voltage transformers
- Single pole insulated with measuring and earth fault windings
- Primary voltage and frequency (50 or 60 Hz) has to be specified
- Secondary windings -- / 110:V3 / 110:3 V or -- / 100:V3 / 100:3 V has to be specified
- Note: VTs can also be delivered without open Delta Earth fault windings
- Burden / class has to be specified

Current transformers
- Single-core or double-core design
- Secondary side reconnectable possible
- Primary current max 600 Amp, has to be specified
- Secondary current 5 Amp or 1 Amp has to be specified

Low voltage compartment
- Terminals for voltage transformers secondary connection
- 3-pole MCB for measuring voltage
- 1-pole MCB for earth fault voltage
- Damping resistor for voltage transformers open delta earth fault windings, to avoid ferro resonance
- Separating terminals for current transformers secondary windings
- Space for electronic kWh-meter

Optional features
- Voltmeter with selector switch, 6 positions +0
- A-meter with selector switch, 3 positions +0

Outer assembly

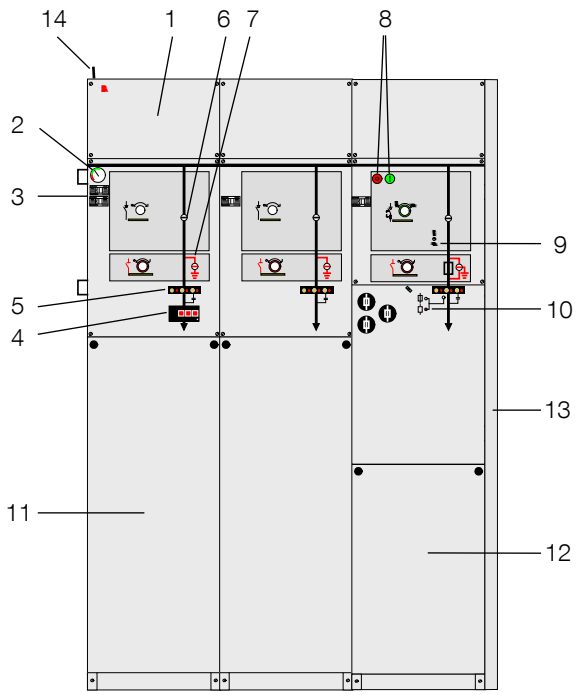

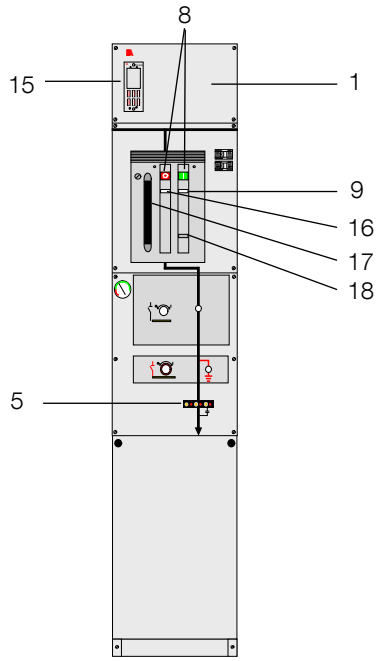

1. Low voltage compartment
2. Manometer
3. Nameplate
4. Short circuit indicator
5. Capacitive voltage indication
6. Load break switch position
7. Earthing switch position
8. Push buttons close/open operation
9. Charged spring indicator
10. Fuse blown indicator
11. Cable compartment cover standard C-module
12. Cable compartment cover standard F-module
13. Side cover
14. Lifting lug
15. Protection relay
16. Position indicator vacuum circuit-breaker
17. Operating mechanism for vacuum circuit-breaker
18. Counter

Covers

Upper and lower front covers are manufactured of 2 millimeter Aluzinc and covered with a polycarbonate foil. These foils contain the mimic diagram of the main circuit with the position indicators for the switching devices.
Background colour for these foils is grey RAL 7035, which makes the black single line diagram to stand out for easy optical reading of position indicators. Both the upper and lower front covers are removable.

Low voltage compartments are available in three different versions: integrated without hinged door, integrated with hinged door and high with hinged door. For the high version, total height of panel will be 2180 mm (2280 mm for metering module).

There are three different cable compartment covers; standard, arc proof and one with extra depth for parallel cables. All cable compartment covers are removable. Each module has a separate cable compartment which is divided from the others by means of partition walls.

A vertical partition wall is fitted to divide the cable compartment(s) from the rear side of the switchgear / ring main unit. In case of an internal arc fault, followed by an opening of the pressure relief in the bottom of the tank, this partition wall will prevent the hot gases blowing out from the pressure relief to enter the cable compartments.

Side covers are made of 1,25 millimeter hot rolled steel and powder painted in colour RAL 7035.

Cable switch module

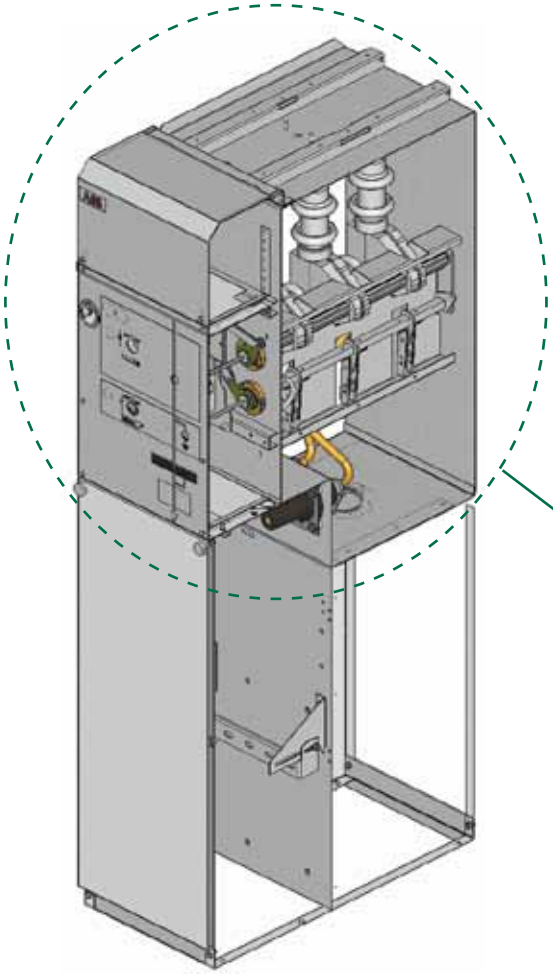

The cable switch (C-Module) is a two positioning switch-disconnector using SF_6 gas as an arc quenching medium with a separate earthing switch.

The switch positions are close and open. In the open position the switch satisfies the disconnector requirements.

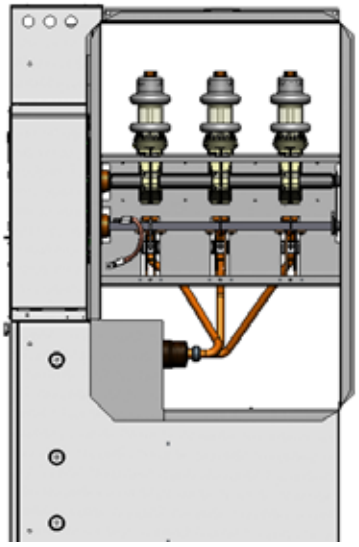

Switch-fuse module

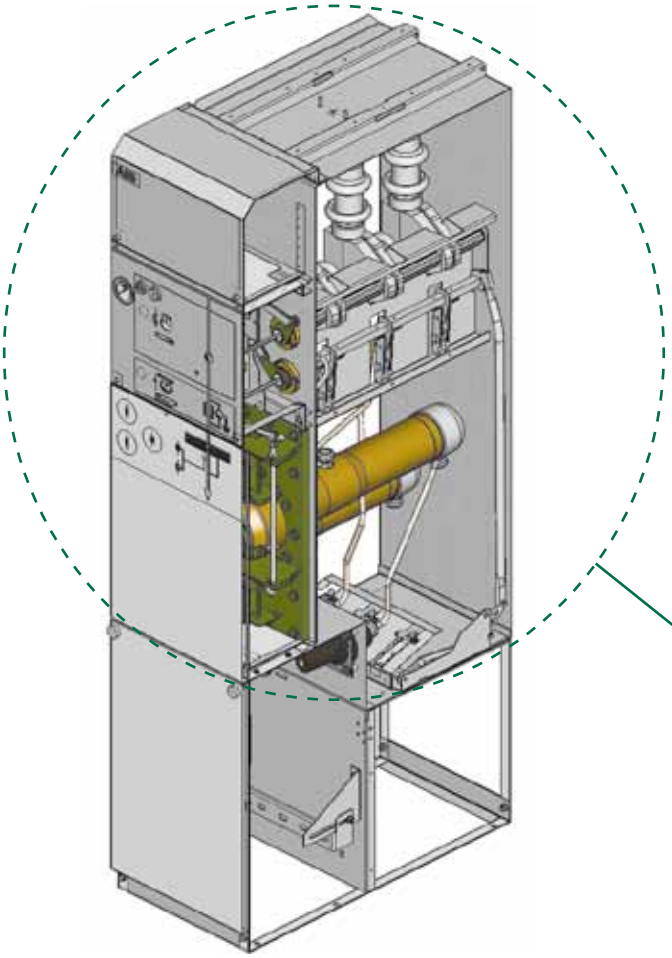

The switch-fuse combination (F-Module) is a two positioning switch diconnector with a separate earthing switch.

By means of the fuse tripping device it operates as a switch-fuse combination. There is a double earthing switch which in the earthed position connects earth to both sides of the fuses simultaneously.

Both earthing switches are operated in one operation. The switch-fuse and earthing switch is mechanically interlocked to prevent hazardous access to the fuses.

The lower cover which gives access to the fuses is also mechanically interlocked with the earthing switch.

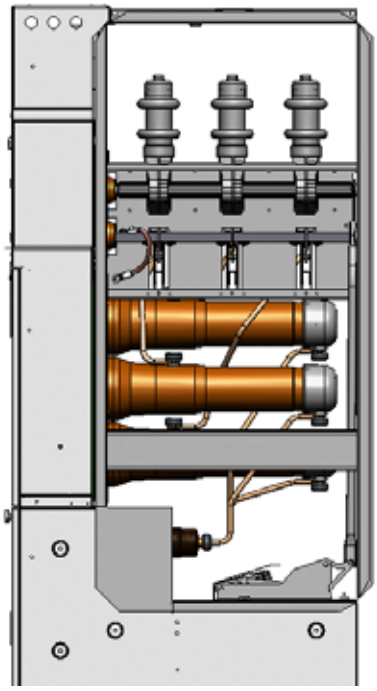

Vacuum circuit-breaker module

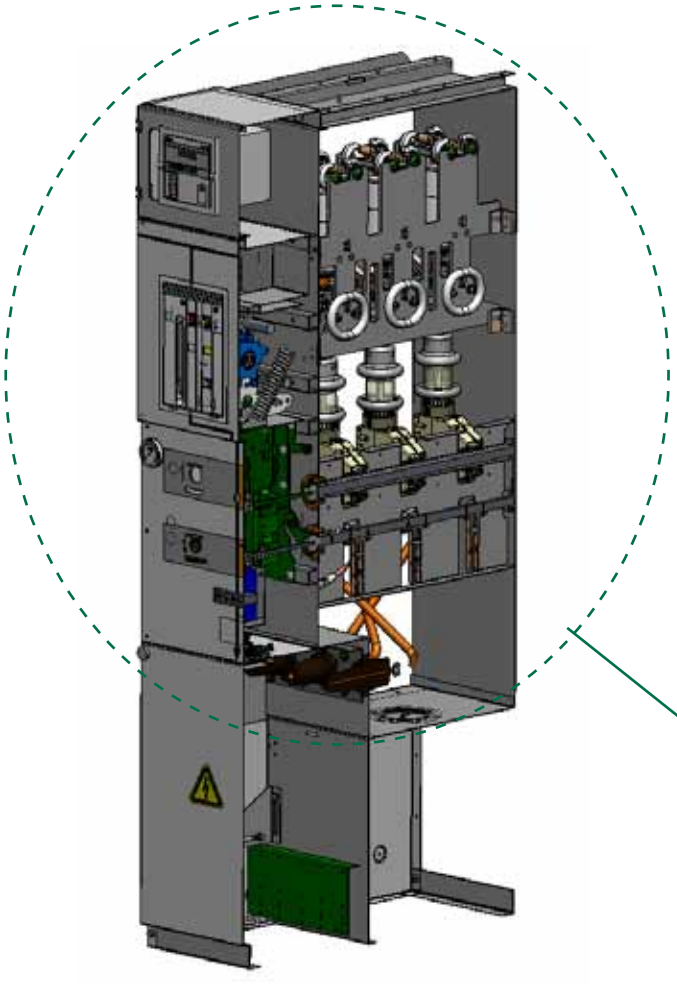

The vacuum circuit-breaker (V-module) has vacuum bottles for short-circuit current interruption.

A two-position disconnector is connected in series with the circuit-breaker. After the disconnector has been opened the integrated down-stream earthing switch can be closed.

The operation between vacuum circuit-breaker and disconnector as well as between disconnector and earthing switch are mechanically interlocked.

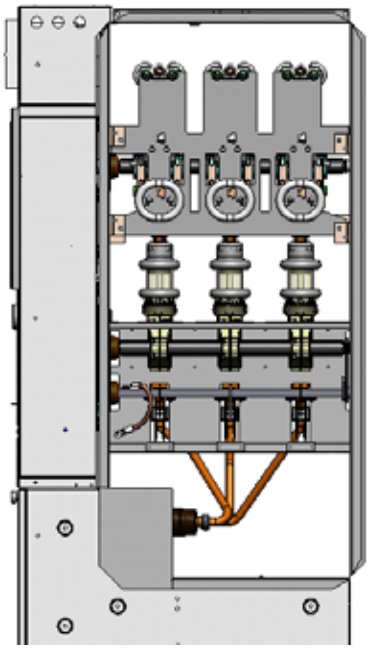

Cable bushings

400 series bushing (Interface C) with terminal for capacitive voltage indication

Inner cone (Interface 2) bushing for connection of external busbars on the side of the unit

The connection of the HV-cable is made by cable bushings. The bushings are made of cast resin with moulded in conductors.
In addition, a screen is moulded in to control the electrical field and is also used as the main capacitor supplying the voltage indicators.

ABB has produced bushings for SF_6 switchgears since 1985 with high performance and quality.
A very large number has been installed worldwide in distribution networks, power stations and industrial complexes.

Used together with fully screened connectors it is an ideal solution for areas with humidity or condensation problems. The bushings are designed according to EN 50180 / EN 50181.

Two different cable bushings are available:
- 400 series (Interface C) with M16 bolted contact (I_n=630A)
- 400 series (Interface B) with plug-in contact (I_n=400A)

For more details, please see pages 41-44.

Completely sealed enclosure

SafeRing/SafePlus 36 are switchgear types using SF_6 gas (Sulfur hexafluoride) as insulation and quenching medium. The SF_6 is contained in a welded stainless steel enclosure.

The pressure system is defined as a sealed for life system with an operating life time better than 30 years. The leakage rate is less than 0,1% per year.

In order to guarantee a reliable and tight welding, all welding is carried out by computer controlled robots.
Electrical and mechanical bushings are clamped to the enclosure and sealed by high quality O-rings.

The mechanical bushings have in addition a rotating shaft which connect the shaft of the switch to the corresponding shaft of the mechanism.
The rotating shaft is sealed by a double set of gas seals.

All SF_6 enclosures have to pass the leakage test with Helium, before being gas filled with SF_6.
Due to the characteristics of Helium, this test will detect any leakage. Leakage test and gas filling are made inside a vacuum chamber.

The SF_6 enclosure has a degree of protection of IP67. This means the SF_6 enclosure can be immersed into water and still maintain all functions in a satisfactory way.

Mechanisms and interlocks

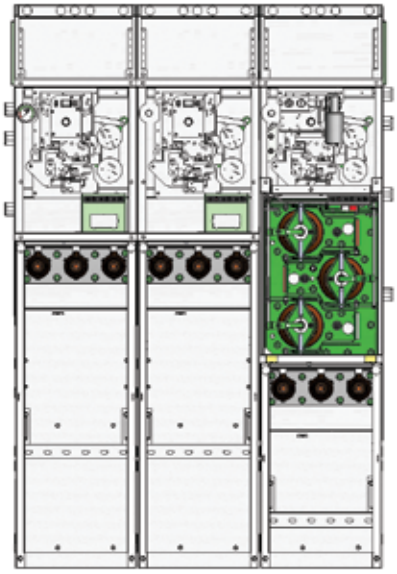

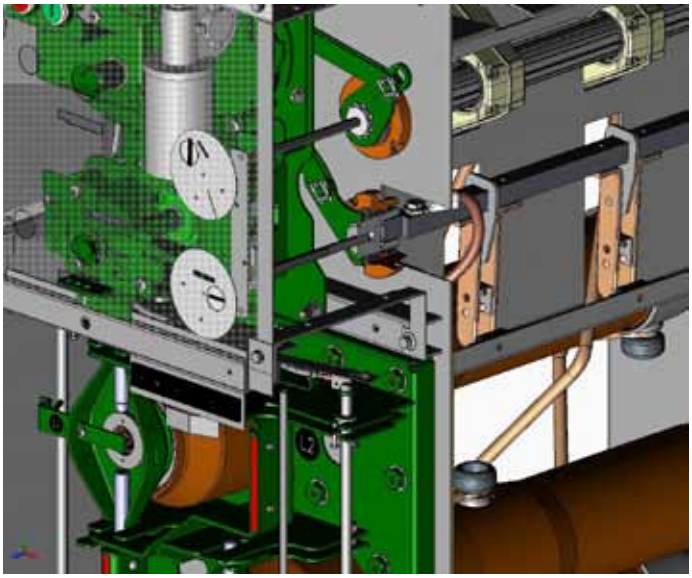

All operating mechanisms are situated outside the SF_6 - enclosure behind the front covers with degree of protection of IP2X.

This gives the opportunity of easy access to all operating mechanisms if retrofit or service should be required. The speed of operation of these mechanisms is independent of how fast the handle is operated.

As an option, all units can be equipped with interlocked cable covers. This will prevent access to the cable compartment before earthing switch is in closed position. It will also be impossible to operate switch disconnector to closed position before cable compartment cover is put back in place.

Each mechanism is equipped with a padlocking device. When adding a padlock to this device, the access to operate the mechanism will be prevented. This device has three holes with diameter 9 millimeter.

All operating mechanisms are equipped with true position indicators for all switches. In order to safeguard true indication, indicators are directly connected to the operating shafts of the switches inside the SF_6 tank.

Operating handle has an anti-reflex system which prevents an immediate re-operation of the switch.

All steel parts have been electroplated with zinc and passivated against corrosion.

Switch-fuse module (F)

The mechanism (3PAE) has two operating shafts; the upper one for the load break switch and the lower one for the earthing switch.
The upper one operates two springs; one for closing and one for opening. Both springs are charged simultaneously. By means of mechanical push buttons it is then possible to close and open the load break switch.

The opening spring is always charged when the load break switch is in closed position and will then be ready to open the load break switch immediately if one of the HV fuses blows.

The blown fuse(s) has/have to be replaced before the operator will be able to close the load break switch again. According to IEC Publ. 60282-1, all three fuse-links should be replaced, even if only one or two have operated.

The lower shaft is single spring operated. Both operating shafts operate one common shaft which is directly connected to the load break switch and earthing switch inside the SF_6 enclosure.

Due to the mechanical interlock between the upper and lower operating shaft, it is impossible to operate the load break switch when earthing switch is in earthed position or operate the earthing switch when the load break switch is in closed position.
It will also be impossible to get access to the fuse compartment before earthing switch is in closed position.

Mechanisms and interlocks

Cable-switch module (C)

The mechanism (3PKE) has two operating shafts; the upper one for the load break switch and the lower one for the earthing switch.
Both shafts are single spring operated and they are directly connected to the switches inside the SF_6 enclosure. When both load break switch and earthing switch are in open position the switch satisfies the specifications of disconnector.

Due to the mechanical interlock between the upper and lower operating shaft, it is impossible to operate the load break switch when earthing switch is in earthed position or operate the earthing switch when the load break switch is in closed position.

Vacuum circuit-breaker (V)

This module has two mechanisms; the upper one (EL) is for circuit-breaker and the lower one (3PKE) with two operating shafts is for disconnector and earthing switch. The vacuum circuit-breaker has the possibility of rapid auto-reclosing duty. By means for mechanical push buttons it is possible to close and open the circuit-breaker. The opening spring is always charged when the circuit-breaker is in closed position and will be ready to open immediately if the protection relay gives a trip signal. If the mechanism is recharged after closing, it is possible to perform open - close - open sequence.
The lower mechanism is identical to the one described above for cable switch module.
There is a mechanical interlock between these two mechanisms which prevents operating of the disconnector and earthing switch when the circuit-breaker is in closed position.
When the earthing switch is in closed position it will be impossible to operate the disconnector, but the circuit-breaker can be closed for testing purpose.

Side extension

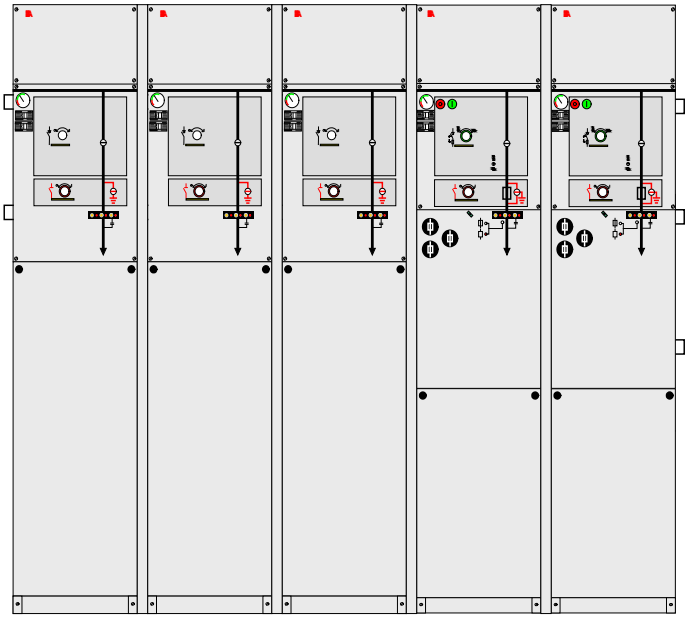

SafePlus 36 with a fully modular design

As an option, SafeRing/SafePlus 36 can be provided with bushings for side extention on one or both sides.

For a SafePlus 36 switchgear consisting of only one module, bushings on both sides are necessary if future extention is required.

When bushings are mounted on the side, you will have these possibilities using our side extention kit:

1. SafePlus switchgear as fully modular.

2. SafePlus switchgear as semimodular.

As 4-way switchgear is the maximum size within one common SF_6-tank, the busbar kit allows a configuration with more than 4 modules.

For practical handling of modules on site, the switchgear can be extended by 1-way units only.

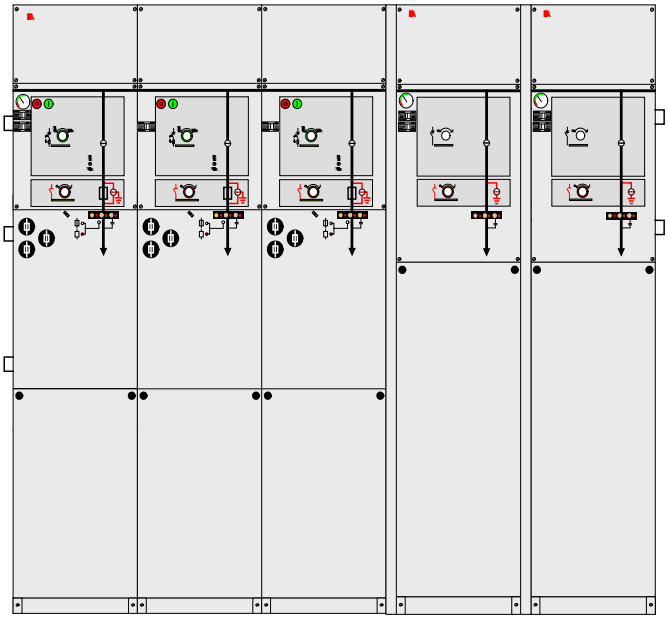

SafePlus 36 consisting of three sections (FFF+C+C) cpnnected to each other by means of side extension kit

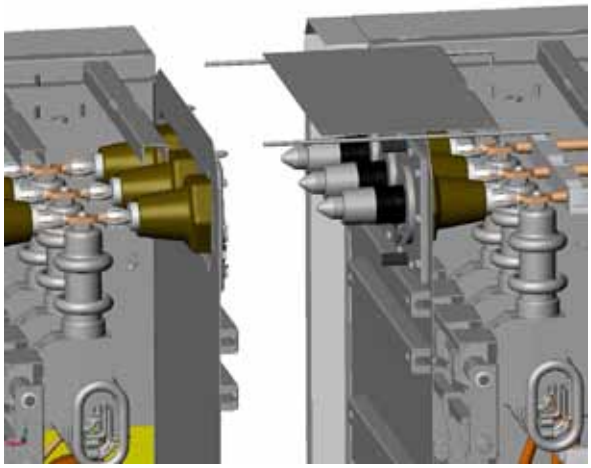

The installation of the external busbars has to be done on site, see separate installation instructions, 1VDD006146 GB.

Low voltage compartment

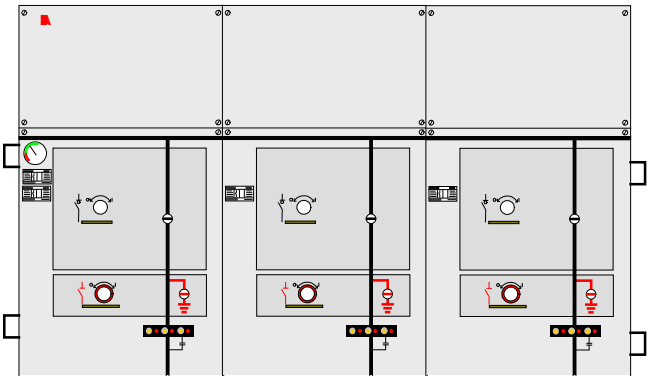

When motor operation, coils, auxiliary switches or other relevant components are mounted on a SafeRing/SafePlus 36 module, the auxiliary relays, MCB / fuses and terminals are located in the LV compartment on the top.

The LV compartment allows entrance of the customer`s low voltage cables from the rear side, left and right side at the top of the switchgear. Also, the LV compartment gives the opportunity to install A-meters with selector switch and local/remote switch for motor operation.

As an option the standard LV-compartment can be delivered with hinged door.

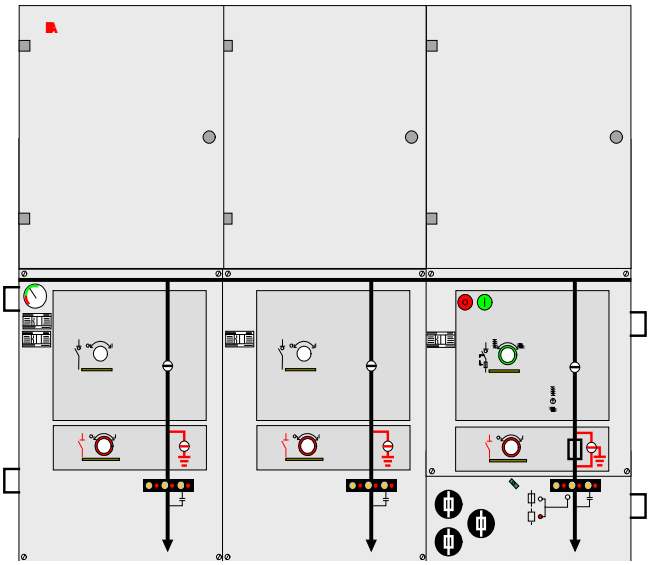

Additionally all SafePlus switchgear can be supplied with a high LV compartment. This compartment can be equipped with protection relay, meters, terminal blocks etc.

Motor operation and coils

Closing and opening operations of load-break switches and charging of the springs of the mechanism for the switch-fuse combination can be performed with a motor operation. Earthing switches do not have this possibility.

All motor devices require DC voltage. If control voltage is either 110 or 220 VAC, a rectifier is integrated in the control unit.

Operating cycle for motor operation for C- and F-module is CO - 3 min (i.e. it can be operated with a frequency of up to one close and one open operation every third minute). Operating sequence for V-module is O-0,3s-CO-15s-CO.

Test voltage for tables below is + 10/ - 15 % for motor operations and closing coils and +10/ -30% for trip coils and opening coils.
Motor and coils can easily be mounted on the mechanisms after delivery (retrofit).

Characterstics of motor operation for C-module

Rated voltage	Power consumption	Operating times		Peak start current	Fuse
(V)	[W] or [VA]	Closing time (s)	Opening time (s)	(A)	
24	130	6-10	6-10	19	F 6,3 A
48	150	4 - 7	4 - 7	13	F 4 A
60	90	6 - 9	6 - 9	7	F 4 A
110	90	6 - 9	6 - 9	3	F 2 A
220	90	6 - 9	6 - 9	1,7	F 1 A

Characterstics of motor operation for F-module

Rated voltage	Power consumption	Operating times		Peak start current	Fuse
		Charge / Closing time	Opening time		
(V)	[W] or [VA]	(s)	(ms)	(A)	
24	180	8 - 15	40 - 60	19	F 6,3 A
48	200	5 - 9	40 - 60	13	F 4 A
60	140	8 - 13	40 - 60	7	F 4 A
110	140	8 - 13	40 - 60	3	F 2 A
220	140	8 - 13	40 - 60	1,7	F 1 A

Characterstics of motor operation for V-module

Rated voltage	Power consumption	Charge time	Current	Peak start current	Fuse
(V)	[W] or [VA]	(s)	(A)	(A)	
24	350	4 - 9	15	38	F 10 A
48	350	4 - 9	7	19	F 6,3 A
60	350	4 - 9	6	15	F 6,3 A
110	350	4 - 9	3	8	F 4 A
220	350	4 - 9	1,5	4	F 2 A

Motor operation and coils

Characterstics of shunt trip coils, closing coils and opening coils F-module

Rated voltage	Power consumption	Operating times		Current	Fuse
(V)	[W] or [VA]	Closing time (ms)	Opening time (ms)	(A)	
24 V DC	170	40 - 60	40 - 60	7	F 6,3 A
48 V DC	200	40 - 60	40 - 60	4	F 4 A
60 V DC	200	40 - 60	40 - 60	3	F 4 A
110 V DC	200	40 - 60	40 - 60	2	F 2 A
220 V DC	200	40 - 60	40 - 60	1	F 1 A
110 V AC	200	40 - 60	40 - 60	2	F 2 A
220 V AC	200	40 - 60	40 - 60	1	F 1 A

Characterstics of shunt trip coils, closing coils and opening coils V-module

Rated voltage	Power consumption	Operating times		Current	Fuse
(V)	[W] or [VA]	Closing time (ms)	Opening time (ms)	(A)	
24 V DC	300	40 - 70	40 - 80	12,5	F 10 A
48 V DC	300	40 - 70	40 - 80	6	F 6,3 A
60 V DC	300	40 - 70	40 - 80	5	F 6,3 A
110 V DC	300	40 - 70	40 - 80	3	F 4 A
220 V DC	300	40 - 70	40 - 80	1	F 2 A
110 V AC	300	40 - 70	40 - 80	3	F 4 A
220 V AC	300	40 - 70	40 - 80	1	F 2 A

Motor operation and coils

Auxiliaries like motor drives, operation coils and auxiliary swithes are all located behind the upper front covers.

Electrical control unit for motor-operation and the internal wiring in general, are terminated to the terminals located in the low voltage compartments.

Transformer protection

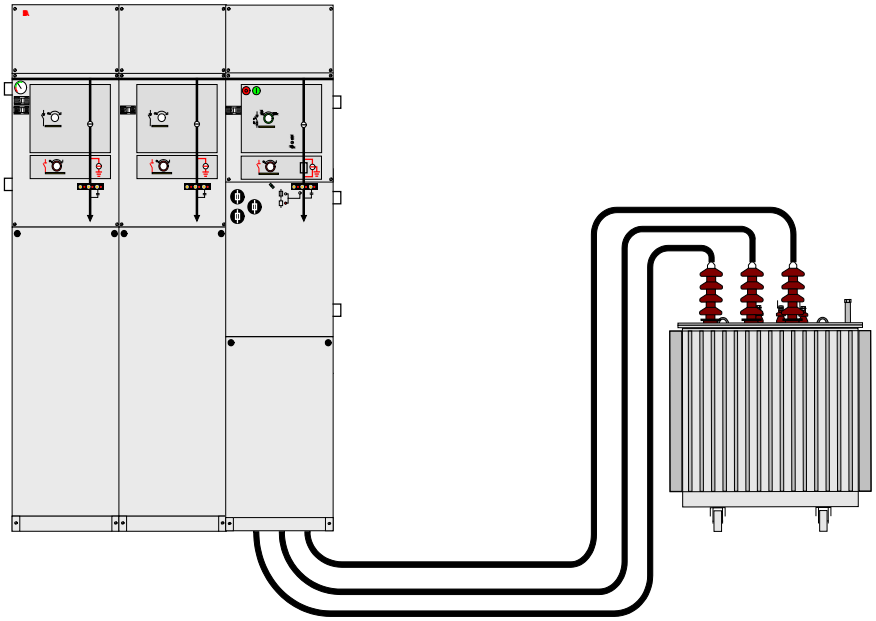

SafeRing/SafePlus 36 offer a choice between switch-fuse combination or circuit-breaker in combination with relay for transformer protection.

The switch-fuse combination offers optimal protection against short-circuit currents, while the circuit-breaker with relay offers better protection against low over-currents. Circuit-breaker with relay is always recommended for higher rated transformers.

SafeRing and SafePlus V-module are delivered with 630A rating. Both for SafeRing and SafePlus the relay is self powered utilizing the energy from the CT's under a fault situation, for energizing the trip coil.

The self powered relay can also be used for cable protection and more details on the different relays can be found in chapter 6.6.

Transformer protection with self powered relay:

- ABB relay type REJ 603

Important features V-module:

- Relay behind cover. No need for additional low voltage box for the self powered relays used for transformer protection

Typical for vacuum circuit-breaker protection:

- Good protection against short-circuits
- Very good for protection of over-currents
- Small fault currents are detected in an early stage

SafeRing/SafePlus 36 - Fuse-link selection

By selection of fuse-links for the protection of a transformer, it is important that requirements in IEC 62271-105 and in IEC 60787 are fulfilled. In particular Annex A in IEC 62271-105 gives a good example of the coordination of fuses, switch and transformer.

Correct selection of fuse-links for the protection of the transformer will give:

- Optimal protection of the transformer.
- No damage on the fuse-link's fuse-elements due to the magnetizing inrush current of the transformer.
- No overheating of the fuse-links, the switch-fuse combination or the switchgear due to the full load current or the permissible periodic overload current of the transformer
- A transfer current of the combination which is as low as possible, and less that the rated transfer current of the switch-fuse combination.
- A situation where the fuse-links alone will deal with the condition of a short-circuit on the transformer secondary terminals.
- Fuse-links that discriminate with the low-voltage fuse-links in the event of phase-to-phase faults occurring down stream the low-voltage fuse-links.

By carefully checking that these rules are followed, fuse-links from any manufacturer can be used in combination with SafeRing/SafePlus 36 as long as the fuse-links are in accordance with the requirements described on page 35.

Fuse selection table - CEF

SafeRing 36 SafePlus 36 F-panel 100% load		Rated voltage: 36 kV Operating voltage: 30 kV $I_{transfer}$ at 36 kV: 840 A T_o: 40 ms		
Transformer rating (kVA)	u_k (%)	Transformer rated current (A)	ABB Catalogue no.	Fuse link rated current (A)
100	4	1,9	1YMB531006M0001	6
125	4	2,4	1YMB531006M0002	10
160	4	3,1	1YMB531006M0002	10
200	4	3,8	1YMB531006M0003	16
250	4	4,8	1YMB531006M0003	16
315	4	6,1	1YMB531006M0003	16
400	4	7,7	1YMB531006M0003	16
500	4	9,6	1YMB531006M0004	25
630	4	12,1	1YMB531006M0004	25
800	5	15,4	1YMB531006M0004	25
1000	6	19,2	1YMB531006M0005	40
1250	6	24,1	1YMB531006M0005	40

SafeRing 36 SafePlus 36 F-panel 120% load		Rated voltage: 36 kV Operating voltage: 30 kV $I_{transfer}$ at 36 kV: 840 A T_o: 40 ms		
Transformer rating (kVA)	u_k (%)	Transformer rated current (A)	ABB Catalogue no.	Fuse link rated current (A)
100	4	1,9	1YMB531006M0001	6
125	4	2,4	1YMB531006M0002	10
160	4	3,1	1YMB531006M0002	10
200	4	3,8	1YMB531006M0003	16
250	4	4,8	1YMB531006M0003	16
315	4	6,1	1YMB531006M0003	16
400	4	7,7	1YMB531006M0003	16
500	4	9,6	1YMB531006M0004	25
630	4	12,1	1YMB531006M0004	25
800	5	15,4	1YMB531006M0005	40
1000	6	19,2	1YMB531006M0005	40
1250	6	24,1	1YMB531006M0005	40

- Both tables above are based on using ABB CEF hihg-voltage current-limiting back-up fuse-links
- Normal operating conditions with no overlaod of transformer (table 1) and with 20% overlaod of transformer (table 2)
- Ambient air temperature -25°C to +40°C

Fuse selection table - SIBA

SafeRing 36 SafePlus 36 F-panel 100% load		Rated voltage: Operating voltage: $I_{transfer}$ at 36 kV: T_o :	36 kV 30 kV 840 A 40 ms		Rated voltage: Operating voltage: $I_{transfer}$ at 40,5 kV: T_o :	40,5 kV 35 kV 750 A 40 ms	
Transformer rating (kVA)	u_k (%)	Transformer rated current (A)	SIBA article no.	Fuse link rated current (A)	Transformer rated current (A)	SIBA article no.	Fuse link rated current (A)
100	4	1,9	30 008 13	6,3	1,6	30 340 13	6,3
125	4	2,4	30 008 13	10	2,1	30 340 13	6,3
160	4	3,1	30 008 13	10	2,6	30 340 13	10
200	4	3,8	30 008 13	10	3,3	30 340 13	10
250	4	4,8	30 008 13	16	4,1	30 340 13	10
315	4	6,1	30 008 13	16	5,2	30 340 13	16
400	4	7,7	30 008 13	20	6,6	30 340 13	16
500	4	9,6	30 008 13	25	8,2	30 340 13	20
630	4	12,1	30 016 13	31,5	10,4	30 340 13	20
800	5	15,4	30 016 13	31,5	13,2	30 341 13	25
1000	6	19,2	30 016 13	40	16,5	30 341 13	31,5
1250	6	24,1	30 016 13	40	20,6	30 341 13	40
1600	6	30,8	30 024 43	63	26,4	30 342 13	50
2000	6	38,5	30 024 43	63	33,0	30 342 13	63

SafeRing 36 SafePlus 36 F-panel 120% load		Rated voltage: Operating voltage: $I_{transfer}$ at 36 kV: T_o :	36 kV 30 kV 840 A 40 ms		Rated voltage: Operating voltage: $I_{transfer}$ at 40,5 kV: T_o :	40,5 kV 35 kV 750 A 40 ms	
Transformer rating (kVA)	u_k (%)	Transformer rated current (A)	SIBA article no.	Fuse link rated current (A)	Transformer rated current (A)	SIBA article no.	Fuse link rated current (A)
100	4	1,9	30 008 13	6,3	1,6	30 340 13	6,3
125	4	2,4	30 008 13	10	2,1	30 340 13	6,3
160	4	3,1	30 008 13	10	2,6	30 340 13	10
200	4	3,8	30 008 13	16	3,3	30 340 13	10
250	4	4,8	30 008 13	16	4,1	30 340 13	10
315	4	6,1	30 008 13	20	5,2	30 340 13	16
400	4	7,7	30 008 13	25	6,6	30 340 13	16
500	4	9,6	30 008 13	25	8,2	30 340 13	20
630	4	12,1	30 016 13	31,5	10,4	30 341 13	25
800	5	15,4	30 016 13	31,5	13,2	30 341 13	25
1000	6	19,2	30 016 13	40	16,5	30 341 13	40
1250	6	24,1	30 024 13	50	20,6	30 342 13	50
1600	6	30,8	30 024 43	63	26,4	30 342 13	63

- Both tables above are based on using SIBA HV-back-up fuse-links
- Normal operating conditions with no overlaod of transformer (table 1) and with 20% overlaod of transformer (table 2)
- Ambient air temperature -25°C to +40°C
- Fuse-links with rated current 63A are SSK type (for 36 kV)

Fuses

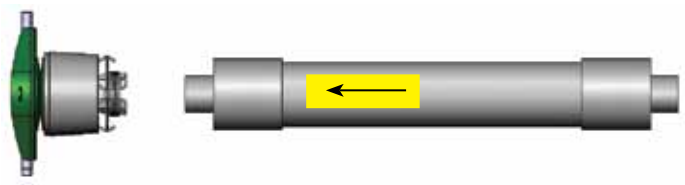

SafeRing/SafePlus 36 are designed and tested for HRC-fuses acc. to IEC Publication 60282-1

The dimensions of the fuse-links that can be used in SafeRing/SafePlus 36 must be in accordance with IEC 60282-1, Annex D. The fuse-links have to be type I with terminal diameter (Ø A) equal to 45 ±1 mm and body length (D) equal til 537 ±1 mm.

The dimensions of the fuse-links can also be in accordance with DIN 43 625 and the length of the fuse canister is based on the use of fuse-links with length 537 mm.

SafeRing/SafePlus 36 are designed for fuse-links with striker in accordance with IEC 60282-1. The striker must be type "Medium" with an energy of 1 J and a travel of minimum 20 mm. The start force of the striker should be minimum 60 N.

Please note: When inserting the fuse link into the canister, the striker-pin must always face outwards against the fuse holder.

2100 kVA is the maximum size Distribution Transformer which can be fed from a SafeRing/SafePlus 36 fuse switch module.

The previous table shows recommended types of fuse links for use in SafeRing/SafePlus 36.

In order to find the correct fuse size compared to the transformer rating in kVA, please see the selection tables on previous pages.

Relays

The V-module for SafePlus 36kV is available with 630A vacuum circuit-breaker. This chapter describes the different choices of protection relays and feeder terminals that can be used in SafePlus. Some of these relays require an additional low voltage compartment.

Standard test procedure is functional test of trip circuit of the relays. All customer settings must be done on site.

ABB feeder terminals are configured according to customer specification for protection functions. Special control requirements can be delivered on request.

The V-module can also be delivered prepared for protection relays.

This is defined in two types:
1. Trip coil and auxiliary contact.
2. Cut out in LV-compartment, trip coil, aux contact, wiring and drawings.

This is applicable for relays delivered complete from our factory or if we have received necessary documentation on the relay.
Other types of relays on request.

There are three main groups of relays delivered:
A) ABB feeder protection relays
B) Self powered relays
C) ABB feeder terminals

A) ABB offers a wide range of feeder protection relays. These relays have been sold for a long period and have an excellent reputation for reliability and secure operation. These relays have either 18-80VDC or 80-265VAC/DC auxiliary supplies and are connected to conventional CTs and VTs.
B) Self powered relays are suitable for rough conditions and places without possibility of auxiliary supply. SafeRing and SafePlus can be delivered with ABB REJ603 to fulfil all relevant needs in a distribution network.
C) ABB feeder terminals provide cost-effective solutions for different protection, monitoring and control applications. SafePlus can be delivered with either REF541, REF542plus or REF630

Relays

ABB feeder protection relays

Protection and measurement				Relay	
Type of faults	IEEE device no.	IEC symbol	Protection function	REF 610	REF 615
Short circuits	51	3 I >	Non-directional overcurrent, low-set stage	X	X
Short circuits	50/51/51B	3 I >>	Non-directional overcurrent, high-set stage	X	X
Short circuits	50/51B	3 I >>>	Non-directional overcurrent instantaneous stage/blockable	X	X
Short circuits	51	2 I >	Two-phase non-directional overcurrent, low-set stage		
Short circuits	50/51	2 I >>	Two-phase non-directional overcurrent, high-set stage		
Earth fault	51N	Io >	Non-directional earth fault, low-set stage	X	X
Earth fault	51N	Io >/SEF	Non-directional earth fault, low-set stage sensitive		
Earth fault	50N/51N	Io >>/Io-o>	Non-directional earth fault, high-set stage	X	X
Earth fault	67N	Io >-->/SEF	Directional earth fault, sensitive, In=1A and 5A		X
Earth fault	67N	Io >-->/SEF	Directional earth fault, sensitive, In=0,2A and 1A		
Earth fault	67N	Io >> -->	Directional earth fault, high-set stage		X
Earth fault	59N	Uo >	Residual overvoltage		X
Additional functions	46	Δ I >	Phase discontinuity		X
Additional functions	62BF	CBFP	Circuit-breaker failure	X	X
Type of measurements current		31/21	Three-phase / two-phase current	X	X
Type of measurements current		Io	Neutral current	X	X
Type of measurements current		Δ I	Degree of unbalance		
Type of measurements current		Uo	Residual voltage		X
Auto-reclosing	79			X	X

ABB self-powered relays

Functionality			Relay
Features	Description	IEEE device no.	REJ 603
Protection functions	Phase overdurrent (multi-characteristic)	50/51	X
Protection functions	Short-curcuit protection	50/51	X
Protection functions	Number of overcurrent elements	50/51B	2
Protection functions	Earth fault current	50N/51N	X
Protection functions	Number of earth fault elements		2
Characteristic curves	Overcurrent element		DEFT,INV [1]
Characteristic curves	Earth fault current		DEFT,INV [1]
Additional functions	Trip indication		X
Additional functions	Electro-impulse		X
Additional functions	input remote tripping (voltage)		X
Additional functions	Auxiliary power, voltage (option)		
Measuring circuit	Rated secondary current		wide range special CT
Measuring circuit	Measuring range, start current I> (A)		7,2
Climatic withstand	Storage temperature (°C)		-40 …+85
Climatic withstand	Operating temperature (°C)		-40 …+85

[1] - Definite time overcurrent (DEFT)
- Normal inverse time overcurrent (NINV)
- Very inverse time overcurrent (VINV)
- Extremely inverse time overcurrent (EINV)
- Long time inverse time overcurrent (LINV)
- Resistance inverse timeovercurrent (RINV)
- Characteristics of high voltage fuse-link (HV-FUSE)
- Characteristics of full range fuse (FR-FUSE)
- Definite time overcurrent
- Inverse characteristics, please contact us for further information

REJ603 transformer protection and cable protection kit (self powered)	Ring core current transformer type	Current range
Transformer type	CT1	8 - 28 A
Transformer type	CT2	16 - 56 A
Transformer type	CT3	32 - 112 A
Transformer type	CT4	64 - 224 A
Transformer type	CT5	128 - 448 A
Protection relay standard CT's typical	Ring core current transformer type	Ration - burden
Transformer type: class 10P10	SVA 100-100-45	50-100-200/1 A 1,5/3/6 VA
Transformer type: class 5P10	SVA 100-100-45	150/1 A 4 VA
Transformer type: class 5P10	SVA 100-100-45	100-200/1 A 4 - 7 VA
Transformer type: class 5P10	SVA 100-100-45	300-600/1 A 4 - 7 VA
Transformer type: class 5P10	SVA 100-100-45	400-600/1 A 4 - 7 VA
Earth fault transformer		
Earth fault transformer, class 10P10, burden 0,5 - 15VA dependent on selected ratio	KOLMA 06A1 (90 mm)	Multi-tap secondary: 50-150/1 A or 50-750/5 A
Earth fault transformer, class 10P10, burden 0,5 - 15VA dependent on selected ratio	KOLMA 06D1 (180 mm)	Multi-tap secondary: 50-150/1 A or 50-750/5

Relays

ABB feeder terminals

SafePlus can be delivered with different feeder terminals:

- REF 541 which is installed in the door of the low voltage compartment.
- REF542plus with integrated web-interface is a leader in the development of feeder terminals. REF 542plus has a separate display unit and does not need a build out frame.
- REF630, part of the Relion® product family designed to implement the core values of the IEC61850 standards.

The units are configured according to customer specification for protection functions.

REF630

REF630 is a comprehensive feeder management IED for protection, control, measuring and supervision of utility and industrial distribution substations. REF630 is a member of ABB's Relion® product family and a part its 630 product series characterized by functional scalability and flexible configurability. REF630 also features necessary control functions constituting an ideal solution for feeder bay control.

REF630 provides main protection for overhead lines and cable feeders of distribution networks. REF630 fits both isolated neutral networks and networks with resistance or impedance earthed neutral. Four pre-defined configurations to match typical feeder protection and control requirements are available. The pre-defined configurations can be used as such or easily adapted or extended with freely selectable add-on functions, by means of which the IED can be fine-tuned to exactly satisfy the specific requirements of your present application.

REF630 incorporates local and remote control functions. The IED offers a number of freely assignable binary inputs/outputs and logic circuits for establishing bay control and interlocking functions for circuit breakers and motor operated switch-disconnectors. REF630 supports both single and double busbar substation busbar layouts.

Relays

REF 541

Depth: 900 mm
Width: 420 mm
Height: 2180mm

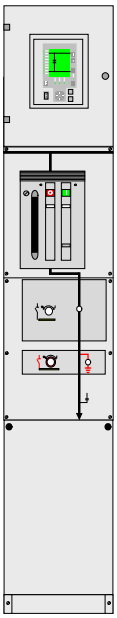

REF 542plus

Depth: 900 mm
Width: 420 mm
Height: 2180mm

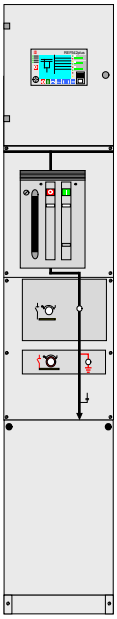

Technology summary REF 541 and REF542plus:
(example of configurable functions)

Protection:

- non-directional overcurrent protection, 3 stages
- directional overcurrent protection, 3 stages
- non-directional earth-fault protection
- directional earth-fault protection
- residual overvoltage protection
- 3-phase thermal overload
- 3-phase overvoltage protection
- 3-phase undervoltage protection
- Under- or overfrequenzy incl. rate of change, 5 stages
- Others

Optional functionality:

- Capacitor bank protection
- Capacitor bank control
- Power quality

Measurement:

- 3-phase current
- neutral current
- 3-phase voltage
- residual voltage
- 3-phase power and energy incl. cos phi
- transient disturbance recorder

Combisensor

Sensor variants

Combined sensors with type designations KEVCY 36 RE1 and KEVCY 40,5 RE1. One version could be selected for both types of combined sensors which provides current measurement, voltage measurement together with voltage indication capability.

Linearity

Due to the absence of a ferromagnetic core the sensor has a linear response over a very wide primary current range, far exceeding the typical CT range.

Current sensor

Current measurement in KEVCY xx RE1 sensors is based on the Rogowski coil principle. A Rogowski coil is a toroidal coil, without an iron core, placed around the primary conductor in the same way as the secondary winding in a current transformer.

Voltage sensor

Voltage measurement in KEVCY xx RE1 sensors is based on the capacitive divider principle.

Sensor application

KEVCY xx RE1 are compact and very small bushing type sensors designed to be used in SF_6 gas insulated switchgear type SafeRing and SafePlus.
The external cone type of the sensor is designed according to the standard EN 50181, Interface C (400 series 630 A, M16 bolt), and therefore enables connection of all compatible cable plugs.

Secondary cables

The sensor is equipped with two cables:

- Cable for coupling electrode with BNC connector
- Current and voltage signal cable with RJ-45 connector for connection with the IED

The cable connector for connection with the IED is type RJ-45. The sensor accuracy classes are verified up to the RJ-45 connector, i.e. considering also its secondary cable. This cable is intended to be connected directly to the IED, and subsequently neither burden calculation nor secondary wiring is needed. Every sensor is therefore accuracy tested when equipped with its own cable and connector.
Standard cable length for connection with IED: 2.2 m
Standard cable length for connection with coupling electrode: 0.45 m

Technical data. general		
Rated primary current of application	up to 630 A	
Rated primary voltage of application	up to 40,5 kV	
Highest voltage for equipment, U_m	KEVCY 36 RE1	36 kV
	KEVCY 40,5 RE1	40,5kV
Rated power frequency withstand voltage	KEVCY 36 RE1	70 kV
	KEVCY 40,5 RE1	95 kV
Rated lighting impulse withstand voltage	KEVCY 36 RE1	170 kV
	KEVCY 40,5 RE1	185 kV

Technical data, voltage sensor	Value	
Rated primary voltage, U_{pr}	KEVCY 36 RE1	33/V3 kV
	KEVCY 40,5 RE1	35/V3 kV
Maximum rated primary voltage, U_{primax}	KEVCY 36 RE1	36/V3 kV
	KEVCY 40,5 RE1	40,5/V3kV
Rated frequency, f_n	50/60 Hz	
Accuracy class	0.5/3P	
Rated burden, R_{br}	10 MOhm	
Rated transformation ratio, K_n	10 000 : 1	
Rated voltage factor, k_u	1.9/8h	
Technical data, current sensor		
Rated primary current, I_{pr}	80 A	
Rated transformation ratio, K_{ra}	80A /0.150 V at 50 Hz 80 A/0.180 V at 60 Hz	
Rated secondary output, U_{sr}	3mV/Hz i.e 150 mV at 50 Hz or 180 mV at 60 Hz	
Rated continuous thermal current, I_{cth}	630 A	
Rated short-time thermal current, I_{th}	25 kA / 3 s	
Rated dynamic current, I_{dyn}	63 kA	
Rated frequency, f_r	50/60 Hz	
Rated extended primary current factor, K_{pcr}	7.875	
Accuracy limit factor, K_{alf}	100	
Rated burden, R_{br}	10 MOhm	
Cables		
Current and voltage sensing:		
Length	2.2 m	
Connector	RJ-45 (CAT-6)	
Coupling electrode:		
Length	0.45 m	
Connector	BNC	

Cable terminations

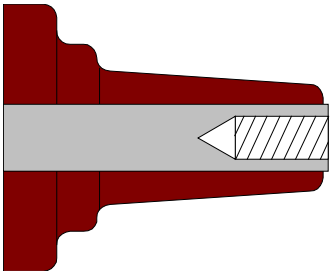

Interface C (Bolted type 400 series)

SafeRing/SafePlus 36 are equipped with cable bushings which comply with CENELEC EN 50181 and IEC 60137 for termination of cables.

The bushings fulfil the requirements of DIN47636T1.

The following cable bushings are used:

Interface C with M16 x 2 metric threads
400 series, In = 630 A
Standard on all modules and for side connection.

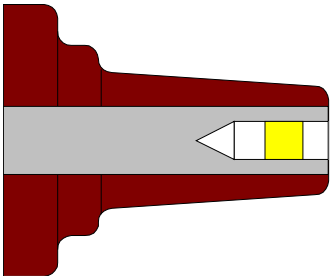

Interface B (Plug-in type 200 series)

Interface B with plug
400 series, In = 400 A
Optional for all modules

The yellow area incicates the silver coated contact spring.

The installation instructions from the manufacturer of cable terminations must be followed. Be sure to lubricate the bushings thoroughly with the silicone supplied.

Important: Where cables are not connected, the earthing switch must be locked in closed position or the bushings must be fitted with dead end receptacles before the unit is energized.

Cable terminations

All bushings are protected by cable compartment cover. The drawings below show typical arrangements with cable connectors.

The table below the drawings shows the distance A in millimeter from cable bushing to the inner part of cable compartment cover.

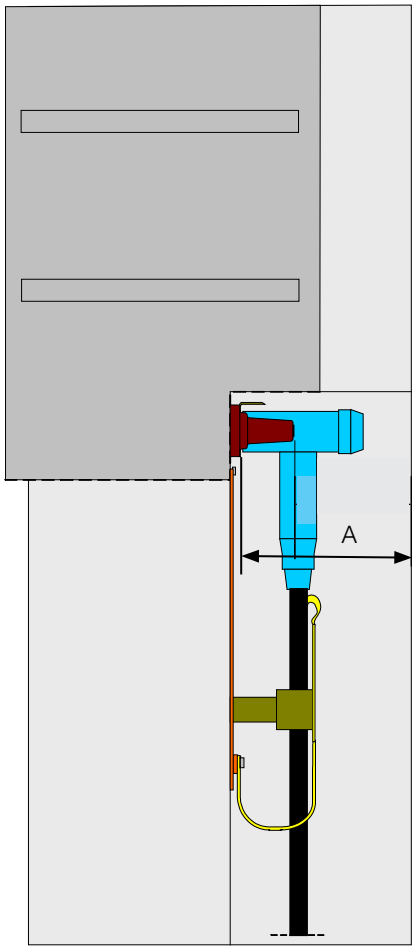

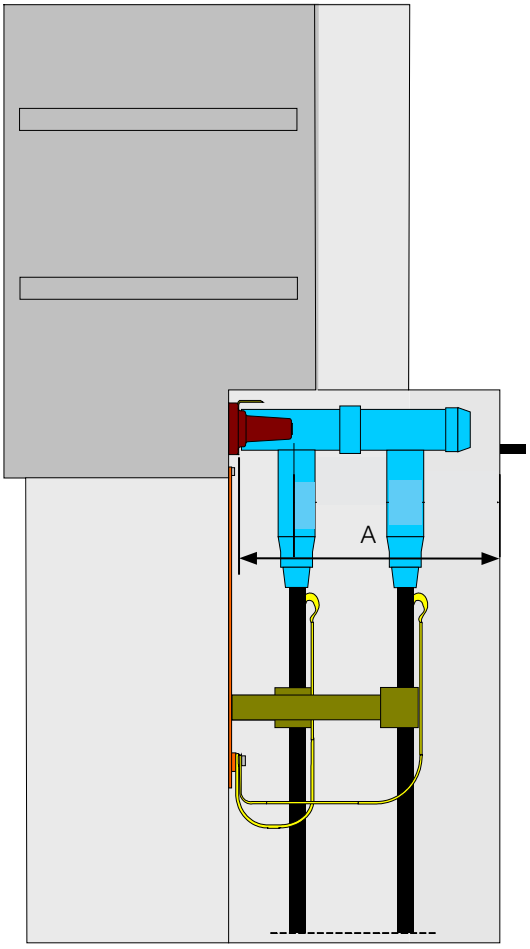

	Distance A
Standard	350 mm
Double cables	570 mm
Arc proof cable covers	331 mm

The following manufacturers of cable terminations are recommended:

- ABB Kabeldon
- Euromold/Elastimold
- nkt cables/Felten & Guilleaume
- Tyco/Raychem

Cable terminations

CSE-A 36400

CSE-A 36630

CSE-A 42400

CSE-A 42630

Screened separable cable connectors

CSE-A 36-42 kV, 400 A, 630 A

Application area

Premolded screened separable connectors for XLPE insulated 1- or 3-core cables with aluminum or copper conductors for 12–42 kV. Can be installed both indoors and outdoors.

Fits standard bushings of outer cone type according to EN 50181. Connectors with rated current:

- 400 A: interface type B with plug-in Ø 14 mm
- 630 A: interface type C with bolt M16

Standard

Meets the requirements of:

- CENELEC, HD 629.1 S2

Design

CSE-A is premolded and manufactured in rubber with three layers; a conductive inner layer, an insulation layer and a conductive outer layer, that are vulcanized together for the best possible interface between the layers.

The cable connectors include both a capacitive test point with protection and an integrated earthing wire.

- Delivered in 3-phase kits, complete with cable lugs, bolt connection and stress grading adapter,designed to ensure a reliable installation.

Note:

- For 3-core cable with common Cu-screen wires, a screen separation kit must be used.

Designation	XLPE/EPR Ø mm2	Conductor cross section mm2	Rated current	Bushing type	Weight kg/unit
Elbow cable connector with capacitive test point, 36kV					
CSE-A 36400-01	24.5 - 34.0	50 - 70	400 A	Interface type B with plug-in Ø 14 mm	6.1
CSE-A 36400-02	27.5 - 42.0	95 - 300	400 A	Interface type B with plug-in Ø 14 mm	6.6
CSE-A 36630-01	24.5 - 34.0	50 - 70	630 A	Interface type C with bolt M16	6.1
CSE-A 36630-02	27.5 - 42.0	95 - 300	630 A	Interface type C with bolt M16	6.6
CSE-A 36630-03	38.0 – 55.0	400 - 630	630 A	Interface type C with bolt M16	8.7
Elbow cable connector with capacitive test point, 42kV					
CSE-A 42400-01	24.5 - 34.0	50 - 70	400 A	Interface type B with plug-in Ø 14 mm	6.1
CSE-A 42400-02	27.5 - 42.0	95 - 300	400 A	Interface type B with plug-in Ø 14 mm	6.6
CSE-A 42630-01	24.5 - 34.0	50 - 70	630 A	Interface type C with bolt M16	6.1
CSE-A 42630-02	27.5 - 42.0	95 - 300	630 A	Interface type C with bolt M16	6.6
CSE-A 42630-03	38.0 - 45.0	400 - 630	630 A	Interface type C with bolt M16	8.7

Cable terminations

36 kV: Separable connectors interface B with earthing shield, I_r = 400 A						Cable compartment with											
						Single cable + surge arrester				Dual cables				Dual cables + surge arrester			
Manu-facturer	Designation	Con-ductor [mm2]	XLPE / EPR Ø [mm]	Additional equipment for dual cable arrangement	Surge Arrester with	Standard Distance A = 361 mm	Arc proof Distance A = 344 mm	Double cables Distance A = 581 mm	Direct connection Distance A = 316 mm	Standard Distance A = 361 mm	Arc proof Distance A = 344 mm	Double cables Distance A =581 mm	Direct connection Distance A = 316 mm	Standard Distance A = 361 mm	Arc proof Distance A = 344 mm	Double cables Distance A =581 mm	Direct connection Distance A = 316 mm
3M	94-EE 605-4	35-300	22.8-39.6	KU 33+94-EE 605-4	MUT 23												
Euromold	M400LR/G	35-185	12.0-37.5	None	None												
Euromold	M400TE/G	35-185	12.0-37.5	M400CP-SC+M400TE/G	None							X					
nkt cables	CB 36-400	25-300	17.0-40.0	CC 36-630	CSA 36	X	X	X	X	X	X	X	X			X	
Prysmian	FMCE-400	25-240	21.4-38.8	None	None												
Prysmian	FMCT-400	25-240	21.4-38.8	None	None												
Südkabel	SEHDT 32	35-300	22.8-39.6	None	None												
Tyco Electronics	RSTP	50-300	22.4-40.0	None	None												
ABB Kabeldon	CSE-A 36400-01	50-70	24.5-34.0	None	None												
ABB Kabeldon	CSE-A 36400-02	95-300	27.5-42.0	None	None												

36 kV: Separable connectors interface C with earthing shield, I_r = 630 A						Cable compartment with											
						Single cable + surge arrester				Dual cables				Dual cables + surge arrester			
Manu-facturer	Designation	Conduc-tor [mm2]	XLPE / EPR Ø [mm]	Additional equipment for dual cable arrangement	Surge Arrester with	Standard Distance A = 360 mm	Arc proof Distance A = 343 mm	Double cables Distance A = 580 mm	Direct connection Distance A = 315 mm	Standard Distance A = 360 mm	Arc proof Distance A = 343 mm	Double cables Distance A =580 mm	Direct connection Distance A = 315 mm	Standard Distance A = 360 mm	Arc proof Distance A = 343 mm	Double cables Distance A =580 mm	Direct connection Distance A = 315 mm
3M	94-EE 705-6	70-400	25.1-42.8	KU 33+94-EE 705-6	MUT 23			X				X					
Euromold	M400TB/G	35-240	12.0-37.5	M400CP-SC+M400TB/G	400PB-XSA			X				X					
Euromold	P400TB/G[1)]	35-240	12.0-37.5	M400CP-SC+P400TB/G	400PB-XSA			X				X					
Euromold	M440TB/G	185-630	23.5-56.0	M440CP+M440TB/G	400PB-XSA			X				X					
nkt cables	CB 36-630	25-300	17.0-34.6	CC 36-630	CSA 36	X	X	X	X	X	X	X	X			X	
nkt cables	CB 36-630 (1250)	400-630	34.0-51.0	CC 36-630(1250) or CC 36-630	CSA 36	X	X	X	X	X	X	X	X			X	
nkt cables	CB 36-630[1)]	50-185	28.9-40.0	None	None												X
nkt cables	CB 36-630 (1250)[1)]	240-500	34.0-51.0	None	None												
Prysmian	FMCTs-400	25-240	21.4-38.3	FMPCS-400-36+ FMCTS-400	Yes[2)]			X				X					
Südkabel	SEHDT 33	35-500	22.8-45.6	KU 33+SEHDT 33	KU 33+ MUT 33			X				X					
Tyco Electronics	RSTI-66xx[1)]	50-300	22.4-40.0	None	None												
Tyco Electronics	RSTI-66Lxx[1)]	400-630	34.0-51.0	RSTI-66CP-M16+ RSTI-66LXX	None							X					
ABB Kabeldon	CSE-A 36630-01	50-70	24.5-34.0	CSEP-A 36630-01	None					X		X					
ABB Kabeldon	CSE-A 36630-02	95-300	27.5-42.0	CSEP-A 36630-02	None					X		X					
ABB Kabeldon	CSE-A 36630-03	400-630	38.0-55.0	CSEP-A 36630-03	None					X		X					

[1)] Special version suitable for rated voltages up to 42 kV. Consult manufacturer.

[2)] Combination with surge arrester possible with Euromold 400PB-XSA

Separable connectors without earthing shield are not recommended. For dynamic and thermal short-circuit currents, please compare the values expected in your network with the rated values of the connector from the different suppliers.

Capacitive voltage detection / indication

HR module (VDS)

VPIS

Capacitive voltage indicator

SafeRing/SafePlus 36 can be supplied with two different types of capacitive voltage indicator systems:

Voltage Detection System, type HR

SafeRing/SafePlus 36 can be delivered with a Voltage Detection System, (VDS) acc.to IEC 61243-5.

Portable voltage indicators, type VIM-1 and VIM-3 can be connected to the coupling system interface, see below for details.

The VDS solution is designed and tested for reliable operation, in heavily polluted and humid environments.

Voltage Presence Indicating System

SafeRing/SafePlus 36 are delivered with a voltage Presence Indicating System (VPIS) acc. to IEC 61958.

The coupling system has integrated voltage indicators (LEDs). The VPIS solution is the recommended choice for normal indoor operating conditions.

Coupling system

VDS or VPIS are situated on the front of the switchgear, one for each functional unit.

The voltage condition for each cable terminal is shown by separable (VDS) or integrated (VPIS) voltage indicators.

Identification of the phases is achieved by labels on the front of the coupling system / voltage indicator.

Phase balance check

The coupling systems of both solutions VDS and VPIS have connection points for phase balance checking.

If the VDS coupling systems have permantently connected indicators (VIM-3), these must be removed before phase balance checking can be done.
Phase balance checking should be done with a recommended phase comparator, type PCM, for details, see below.
PCM can be used for phase balance checking between identical coupling systems (VDS or VPIS).

Particular care should be taken when phase balance checking is done between different coupling systems.

In this case a universal Phase Comparator (VPC acc.to IEC 61243-5) is recommended.

Capacitive voltage detection / indication

PCM

Phase comparators type PCM

The PCM-phase comparator indicates phase balance / unbalance between two cubicles. To be used in capacitive Coupling systems, acc. to IEC 61243-5 and/or IEC 61958.

Special features:
- No external power supply required.
- Voltage indication by flashing LED.
- Fully insulated system (IP 68) with cast resin.
- Function test 230 V AC or test-equipment.
-

Technical data:

Rated frequency	50 Hz
Length of test lead	1,4 m
Operating temperature	-25 -+55 degress celsius
Dimensions, w x h x d, (excl. connectors)	43 x 22 x 20 mm
Enclosure protection	IP 68
Weight	40 gr

VIM 1

VIM 3

Voltage indicators VIM 1 and VIM 3 for HR-module

The voltage indicators VIM 1 and VIM 3 are used with capacitive outlets based on HR-system, to indicate high voltage in a switchgear. VIM 1 and VIM 3 fulfil the test requirement of IEC 61243-5.

The indicators can be delivered in two versions:
- VIM 1 for voltage indication in one phase at a time, mobile unit.
- VIM 3 for voltage indication in three phases, prepared for permanent mounting in the switchgear.

Special features:
- No external power supply required
- Voltage indication by red flashing LED's.
- Fully insulated system (IP 68) with cast resin and safety pin.
- Function test: e.g. test equipment.

Tecnical data VIM 1 and VIM 3	
Rated frequency	50 Hz
Treshold voltage U	70 - 90 V
Treshold current I	1,62 - 2,5 microA
Capacity to coupling system	74 - 88 pF
Input impedance of indicator	36 - 43,2 Mohm
Operating temperature	-25 - +55o C
Enclosure protection	IP 68
Dimensions VIM1, WxHxD (excl. connectors)	43 x 22 x 30 mm
Dimensions VIM3, WxHxD (excl. connectors)	144 x 28 x 30 mm
Weight VIM 1	40 gr
Weight VIM 3	110 gr

Short-circuit indicator

Horstmann Alpha-E

The Faulted-Circuit Indicator consists of an indicator unit and three current transformers connected to the device. The indicating unit contains the electronic circuit, three rectangular fags and a test and reset button. A local test and resets by a push button is included as well as remote reset by d.c.

Trip currents (Ik)	adjustable to 400, 600, 800 or 1000 A
Delay time (Ik)	100 ms
Timed reset	after passage of 2 or 4 h
Remote test/remote reset	12 - 60 V AC/DC
Temperature range	-30°C... +70°C
Energy supply	log-life lithium cell
Relay contact	permanent or momentary contact (100 ms)

Horstmann SIGMA Short-circuit Indicator

The SIGMA short-circuit indicator is designed for distribution networks using radial or open-ring operation. The instrument is provided with three short-circuit current transformers which are mounted onto the bushings of the switchgear. When the phase current exceeds the preset trip level, the fault-affected phase is indicated by a bright LED flashlight as the remote signal contact gets activated. If a second tripping occurs within a preset time, for example when automatic re-closing is in process, this condition is indicated by a double flashing LED.

Short-circuit trip currents (Ik)	adjustable to 200, 300, 400, 600, 800 or 1000A, or self-asjusting
Response time	40 ms or 80 ms
Timed reset	after passage of 1, 2, 4 or 8 h
Remote test/remote reset	via external potential-free momentary contact
Temperature range	-30°C... +70°C
Energy supply	long-life lithium cell, life expectancy 20 years, flashing time >1000 h
Relay contact	permanent or momentary contact (1s), adjustable

Short-circuit indicator

Horstmann SIGMA F+E 3 Short-circuit and Earth Fault Indicator

The SIGMA F+E 3 short-circuit and earth fault indicator provides the same functions as the SIGMA type. Three cable-type current transformers are used for short-circuit and earth fault detection. The overcurrent (I>>) is indicated by a red LED whereas a yellow LED signals the earth fault current (IE).

Trip currents (Ik)	adjustable to 200, 300, 400, 600, 800, 1000 or 2000A, or self-asjusting
Trip currents (I0)	adjustable to 20, 40, 60, 80, 100, 120 or 190 A
Response delay (Ik/I0)	40, 80, 200, 300 ms/ 80, 160, 200, 300 ms
Timed reset	after passage of 1, 2, 4 or 8 h
Remote test/remote reset	via external potential-free momentary contact
Temperature range	-30°C... +70°C
Energy supply	internal:by long-life lithium cell, life expectancy 20 years, total flashing time >1000h; external:by 12-60VDC (optional feature)
Relay contact	permanent or momentary contact (1s), adjustable

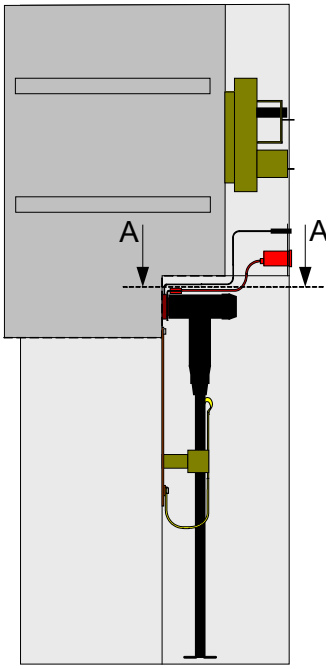

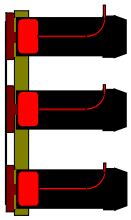

A - A

Ronis key interlocks

As an option all load break switches and earthing swithes may be equipped with Ronis key interlock type EL11AP. Ronis may be mounted according to the customer's specification; either to prevent closing or opening of the switch.

Ronis key interlocks can be used as follows: Two switchgears A and B are connected to each other by cables. The purpose of interlocks is to prevent closing of the earthing switch unless the load break switch on the other switchgear is locked in open position.

1) One Ronis key interlock will be mounted close to the operating shaft of the load break switch in switchgear A. An identical Ronis key interlock will be mounted close to the operating shaft of the earthing switch in switchgear B. As long as the load break switch in switchgear A is in closed position, it will be impossible to remove or operate the key in the key interlock.

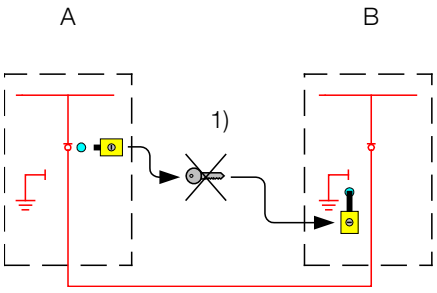

2) First you have to operate this load break switch in switchgear A to open position.
Then it will be possible to operate this key interlock and turn the key which extends the locking bolt. This will prevent the access to the operating shaft of this load break switch.
The next thing to do is to withdraw the key and insert it into the identical key interlock on the earthing switch of switchgear B.

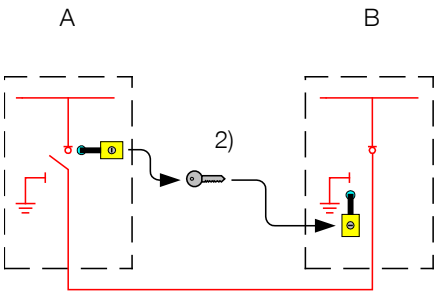

3) When the key is inserted, you will be able to operate the key interlock and turn the key which will withdraw the extended locking bolt.
Then you will have access to operate this earthing switch to closed position. As long as this earthing switch is in closed position, the key will be captured and makes it impossible to close the load break switch in switchgear A.

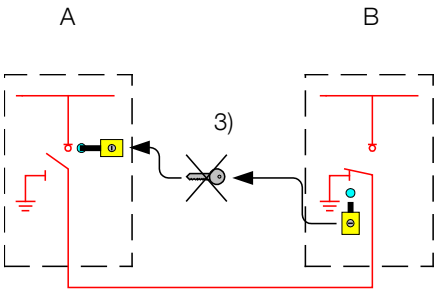

4) If the load break switch in switchgear B and earthing switch in switchgear A are equipped with another identical Ronis key interlock which has a different key combination than described above, it will be impossible to make an earth connection of an incoming energized cable from neither switchgear A nor B.

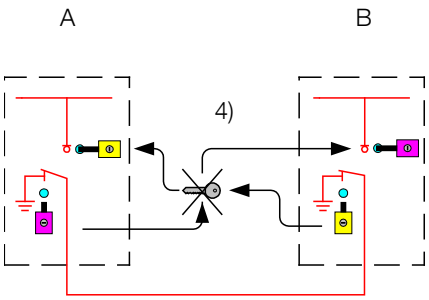

Another example for use of Ronis key interlocks is to prevent access to the distribution transformer before the primary side of the the transformer is connected to earth. This can be solved by means of two identical Ronis key interlocks; one mounted on the earthing switch for the distribution transformer feeder and the other one on the door in front of the transformer.

Remote control

The SafeRing and SafePlus can be supplied with remote control and monitoring equipment. The switchgears can be fitted with two different types of ABB remote terminal units; RTU211 or REC523.

The RTU211 and REC523 can communicate with control centres of all sizes. Different types of communication media can be delivered, and offers a choice between the communication protocols ABB RP570, IEC 870-5-101, DNP 3.0 and Modbus RTU/ASCII. Other protocols can be developed on request.

The integrated remote control and monitoring unit is located in the a special low voltage compartment.

Remote control

Unit with RTU211

Standard features:

- 16 DI (digital inputs), 8 DO (digital outputs) and 6 AI (analogue inputs).
- RS232 interface for connecting external communication media such as radio.

Standard functions:

- Remote control of up to 4 switches
- Position indicator for main switch (load break switch or circuit breaker).
- Monitoring of short-circuit indicator or earth-fault indicator
- Fuse trip indication
- Monitoring of SF_6 gas pressure
- Position indicator for arc-suppressor
- Remote control ON/OFF selector

Additional equipment:

- Modems integrated in the unit: 23WT63 permanent line modem, TD-22 DC dialled modem or DLM100 modem (Distribution Line Carrier) with inductive coupler DLC100
- Batteries and battery charger: 24 VDC back up supply with battery monitoring, temperature compensated charging and deep discharge protection
- Heater
- Position indicator for earthing switch and disconnector. This requires an extra input board with 16DI.

Low-voltage DPI — Direct Process Interface:

This is an I/O board in the RTU211 family, which can be directly connected to 5A and 230/400 V. This allows connection of a signal from the current transformers in a cable compartment, or for current/voltage measurements on the low-voltage side.

The remote control and monitoring unit can be supplied with 2×3 current and 2×4 (including N) voltage inputs. On the basis of these measurements, the built-in processor can calculate a number of values to give power quality monitoring.

Remote control terminal RTU211	Auxiliary power	24 - 110 V DC or 110 / 220 V AC
	Charger	2,5 A
	Battery	2 x 12 V (24 V), 20 Ah
Communication protocols	RP 570 / 571	Standard
	IEC 870-5-101	With protocol converter card
	DNP 3.0	With protocol converter card
	Modbus RTU	With protocol converter card
Modem	ABB 23WT63, permanent-line	V 23 modem for point-to-point multidrop or radio up to 1200 Baud
	Westermo dialled modem	CCITT V.22bis. 2400 bit/s
		CCITT V.22bis. Bell 212A. 1200 bit/s
		CCITT V.21bis. Bell 103. 300 bit/s
		CCITT V.23bis. 1200 75/ bit/s

Remote control

Unit with REC523

Standard features:

- 15 DI, 9 DO and 9 AI (analogue for combisensor).
- Integrated battery charger for 24 VDC back up supply with battery monitoring, temperature compensated charging and deep discharge protection.
- Outlet for communication device, 12 VDC, 7A peak, 1A continously
- Measurement interface : Voltage and current transformers
- RS232 interface for connecting external communication media such as GSM or radio.

Standard functions:

- Non-directional short circuit and earth fault indication for remote and local reading (directional as option)
- Load/fault currents and voltages measurements and registrations for remote reading with time stamps
- Remote control of up to 4 switches/breakers
- Position indicator for main switch (load break switch or circuit-breaker)
- Fuse trip indication
- Temperature compensated battery charger and condition monitoring. Deep discharge prevention.
- Monitoring of SF_6 gas pressure
- Position indication for arc suppressor
- Remote control ON/OFF selector

Additional equipment:

- Protocols in addition to above: ANSI X3.28 HD, LON-bus and SPA-bus and others on request.
- Plug-in modem for conventional radios and dial-up, 2- or 4- wire leased or fixed line ITU-T recommendations: V.21, V.22, V.22 bis, V.23, V.32, V.32 bis
- Modems integrated in the unit:, TD-22 DC permanent line modem or dialled modem or DLM100 modem (Distribution Line Carrier) with inductive coupler DLC100.

SafePlus with remote control and monitoring

SafePlus can be delivered with remote control and monitoring equipment mounted in a special low voltage compartment. Batteries, charger, communications and main RTU will be engineered solutions.

I/O modules will be connected to the main RTU via flat cable or fiber optics.

High low voltage compartment with hinged door

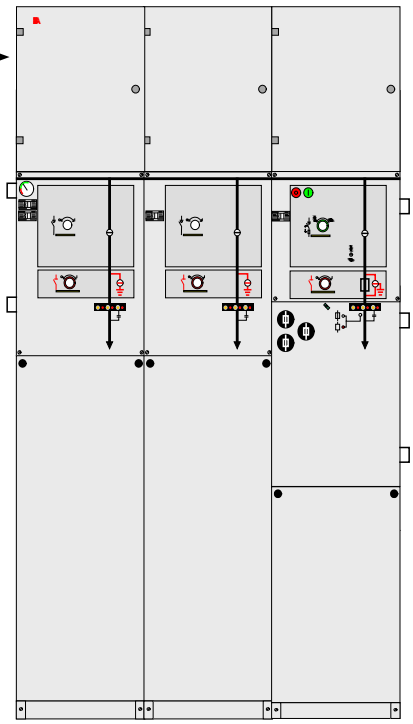

Dimensions

Standard units

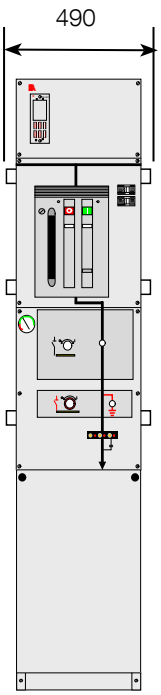

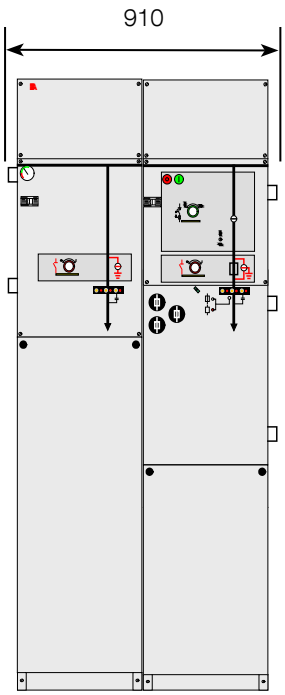

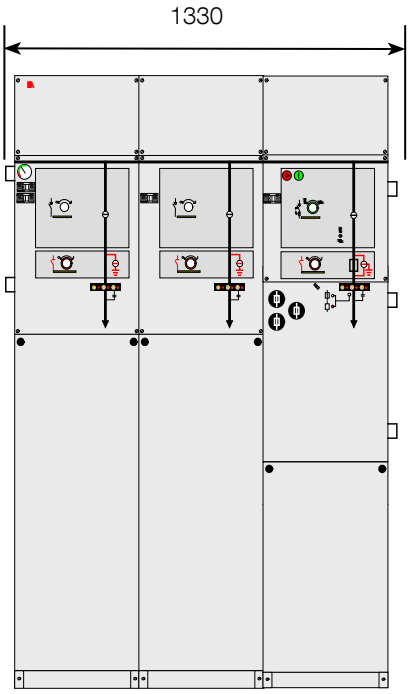

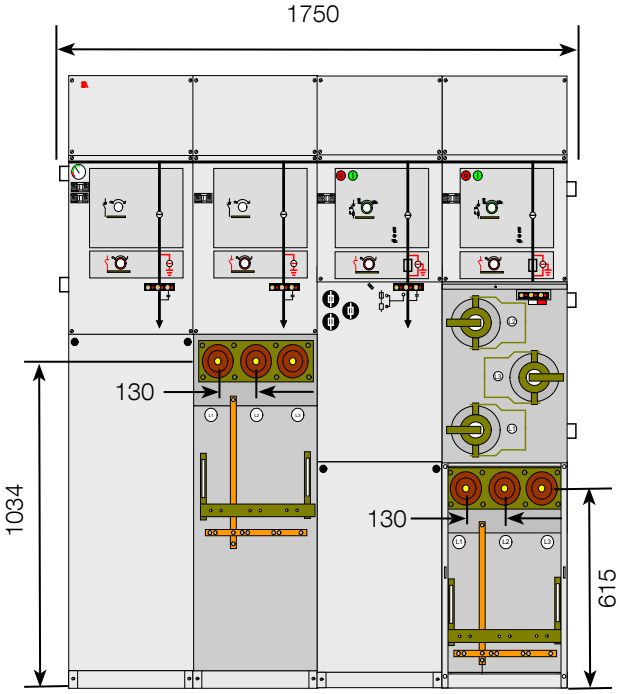

Dimensions

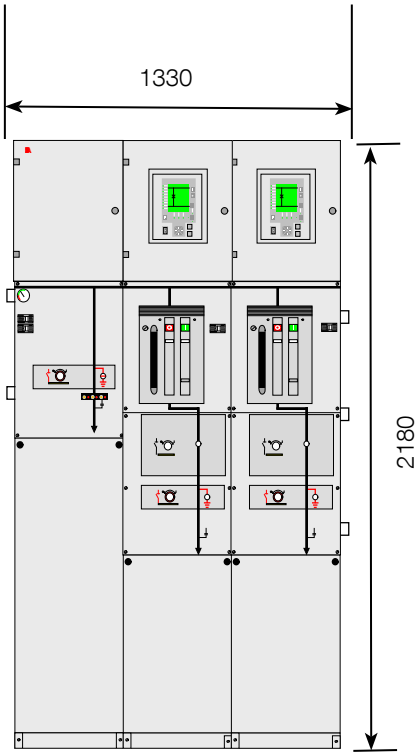

Low voltage compartment with REF541

Dimensions

Floor and wall fixing including cable entry

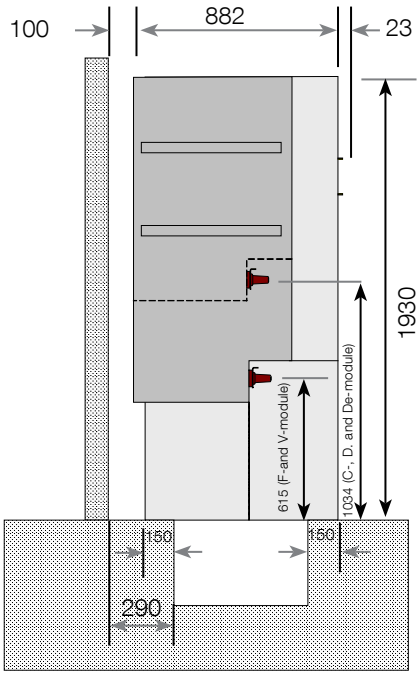

Cable trench and wall fixing

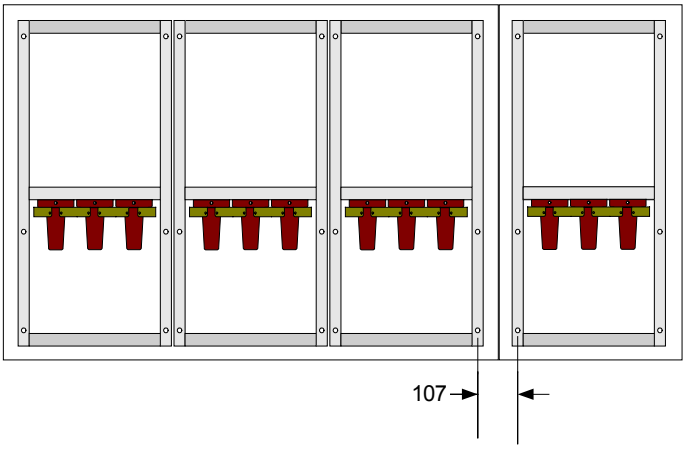

Distance between two units which are connected to each other by means of external busbars

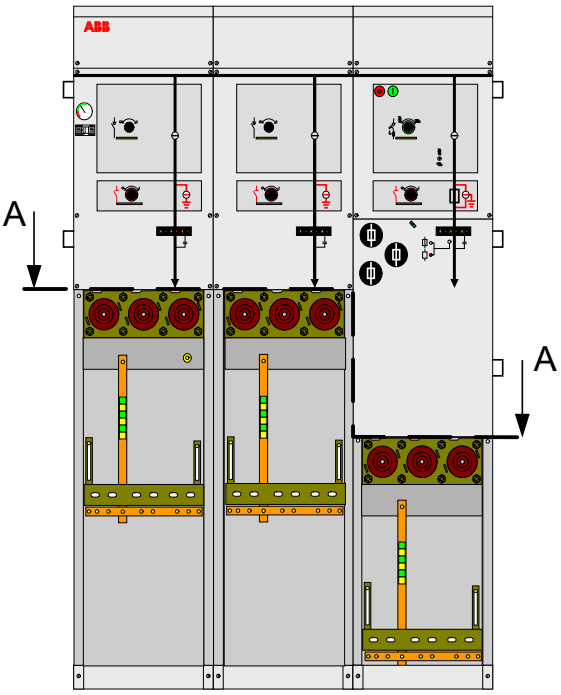

3-way unit with removed cable compartment covers

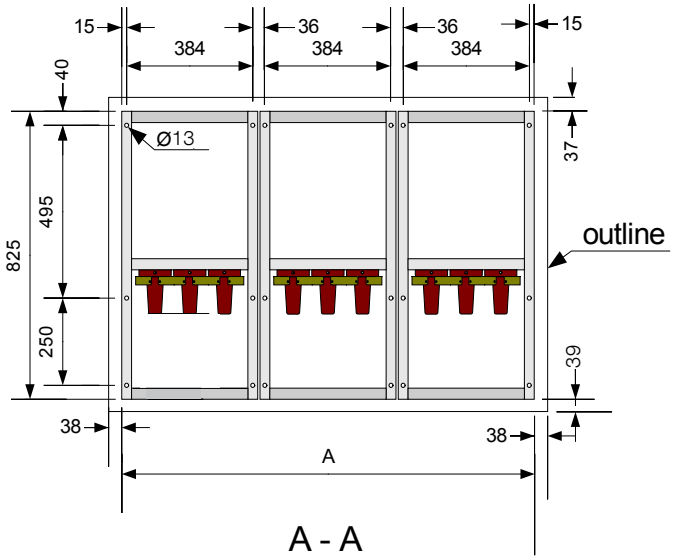

Dimensions

Unit	1-way	2-way	3-way	4-way
A (mm)	420	840	1260	1680

Dimensions

Side extension

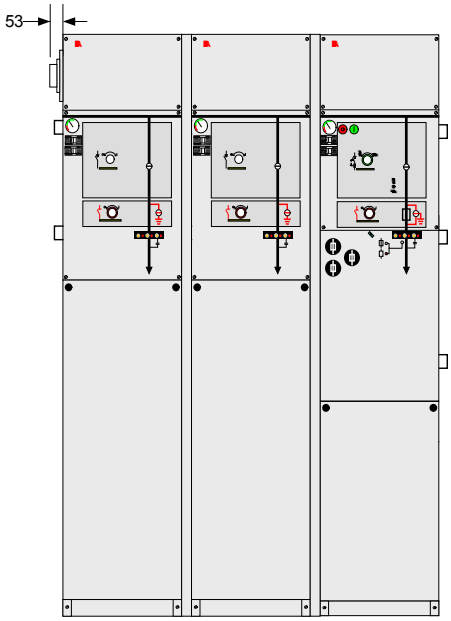

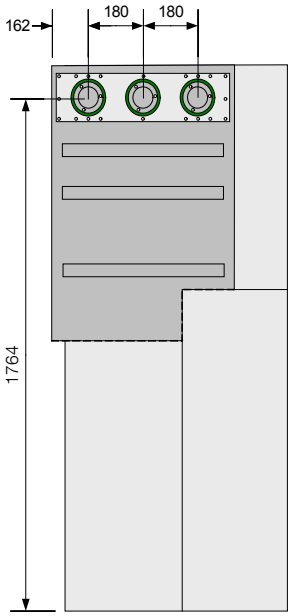

SafeRing 36kV CCF with dead end receptacles on left hand side (also available on right hand side)

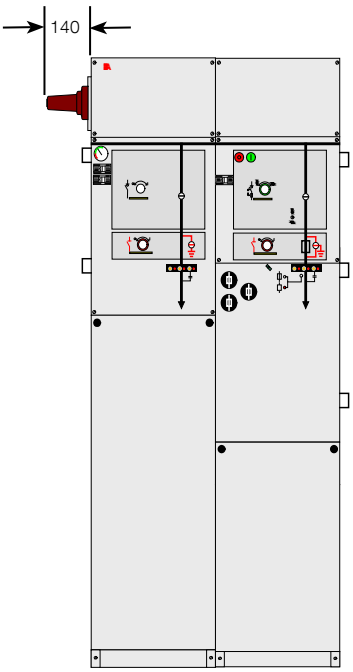

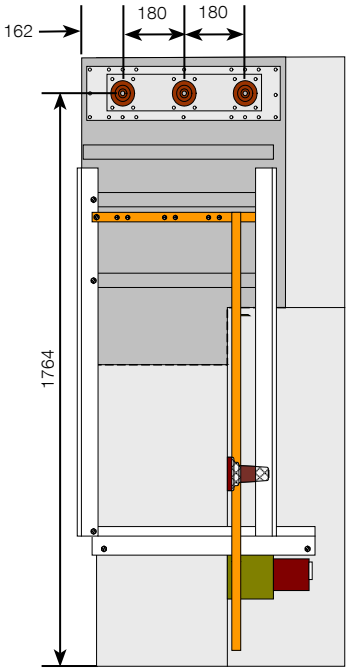

SafePlus 36kV CF with cable bushings on left hand side (also available on right hand side)

Dimensions

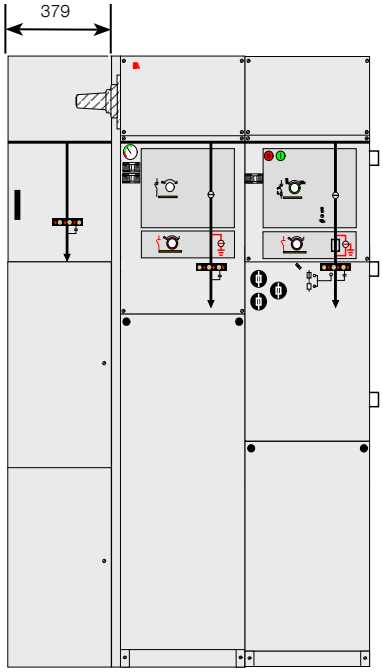

SafePlus 36kV CF with cover on left hand side

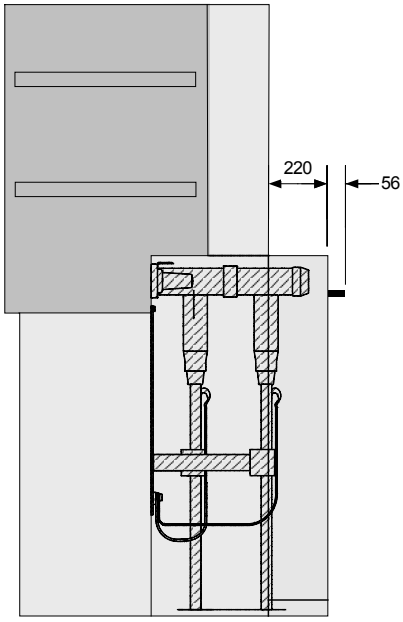

Cable compartment cover for parallel cables

Technical data

IEC 62271-1	High-voltage switchgear and controlgear - Part 1: Common specifications
IEC 62271-100	High-voltage switchgear and controlgear - Part 100: High-voltage alternating-current circuit-breakers
IEC 62271-102	High-voltage switchgear and controlgear - Part 102: Alternating current disconnectors and earthing switches
IEC 62271-105	High-voltage switchgear and controlgear - Part 105: Alternating current switch-fuse combinations
IEC 62271-200	High-voltage switchgear and controlgear - Part 200: A.C. metal-enclosed switchgear and controlgear for rated voltages above 1 kV and up to and including 52 kV
IEC 60265-1	High-voltage switches- Part 1: Switches for rated voltages above 1 kV and less than 52 kV
IEC 60529	Degrees of protection provided by enclosures (IP code)

Technical data

SafeRing 36 - Ring Main Unit, Electrical Data and service conditions

No	Rated voltage	kV	36		38,5	38	40,5
1	Rated frequency	Hz	50	60	50	60	50
2	Power frequency withstand voltage	kV	70	70	80	80	95
	- across disconnector	kV	80	80	95	95	110
3	Lightning impulse withstand voltage	kV	170	150	180	150	185
	- across disconnector	kV	195	165	210	165	215
4	Rated normal current busbars	A	630	600	630	600	630
5	Rated normal current (cable switch)	A	630	600	630	600	630
6	Rated normal current (switch-fuse disconnector)	A	200 [1]		200 [1]		200 [1]
7	Rated normal current (vacuum circuit-breaker)	A	630	600	630	600	630
	Breaking capacities:						
8	active load (cable switch)	A	630	600	630	600	630
9	active laod (switch-fuse disconnector)	A	200		200		200
10	active load (vacuum circuit-breaker)	A	630	600	630	600	630
11	Rated short-circuit breaking current (vacuum circuit-breaker)	kA	20	16	20	16	20
	- Class [5]		E1, S1	E1, S1	E1, S1	E1, S1	E1, S1
	- D.C. component	%	41	30	33	25	33
12	closed loop (cable switch)	A	630	600	630	600	630
13	closed loop (fuse-switch disconnector)	A	200		200		200
14	off load cable charging (cable switch)	A	20	20	21	21	21
15	earth fault (cable switch)	A	60	60	63	63	63
16	earth fault cable charging (cable switch)	A	35	35	36	36	36
17	Rated cable-charging breaking current (vacuum circuit-breaker)	A	50 (Class C1)		50 (Class C1)		50 (Class C1)
18	Rated transfer current (switch-fuse disconnector)	A	840		750		750
19	Rated making capacity (cable switch) E3 - 5 times	kA	40	41,6	40	41,6	40
20	Rated making capacity (downstream earthing switch in F-module) E2 - 5 times	kA	2,5		2,5		2,5
21	Rated short time current 3 sec.	kA	16 [4]	16 [4]	16 [4]	16 [4]	16 [4])
22	Rated short time current 1 sec. (downstream earthing switch in F-module)	kA	1		1		1
23	Rated short-time current (earthing switch)	kA	16	16	16	16	16
24	Rated short-circuit making current (earthing switch) E2 - 5 times	kA	40	41,6	40	41,6	40
25	Rated filling level for insulation	MPa	0,04	0,04	0,04	0,04	0,04
	Service conditions for indoor equipment according to IEC 62271-1						
	Ambient temperature						
26	Maximum value	°C	+ 40 [2]	+ 40 [2]	+ 40 [2]	+ 40 [2]	+ 40 [2])
27	Maximum value of 24 hours mean	°C	+ 35	+ 35	+ 35	+ 35	+ 35
28	Minimum value	°C	- 25	- 25	- 25	- 25	- 25
29	Altitude for erection above sea level	m	...1500 [3]	...1500 [3]	...1500 [3]	...1500 [3]	....1500 [3]
30	Relative humidity		max 95%	max 95%	max 95%	max 95%	max 95%

[1] Depending on the current rating of the fuse-link
[2] Derating allows for higher maximum temperature
[3] For higher altitude, reduced gas pressure is required
[4] Valid with Interface C bushings (400 series bolted type) only
[5] Class E2 without auto-reclosing

Technical data

SafePlus 36 - Compact Switchgear, Electrical Data

No	Rated voltage	kV	36		38,5	38	40,5
1	Rated frequency	Hz	50	60	50	60	50
2	Power frequency withstand voltage	kV	70	70	80	80	95
	- across disconnector	kV	80	80	95	95	110
3	Lightning impulse withstand voltage	kV	170	150	180	150	185
	- across disconnector	kV	195	165	210	165	215
4	Rated normal current busbars	A	630	600	630	600	630
5	Rated normal current (cable switch)	A	630	600	630	600	630
6	Rated normal current (switch-fuse disconnector)	A	200 [1]		200 [1]		200 [1]
7	Rated normal current (vacuum circuit-breaker)	A	630	600	630	600	630
	Breaking capacities:						
8	active load (cable switch)	A	630	600	630	600	630
9	active load (switch-fuse disconnector)	A	200		200		200
10	active load (vacuum circuit-breaker)	A	630	600	630	600	630
11	Rated short-circuit breaking current (vacuum circuit-breaker)	kA	20	20	20	20	20
	- Class [5]		E1, S1	E1, S1	E1, S1	E1, S1	E1, S1
	- D.C. component	%	41	30	33	25	33
12	closed loop (cable switch)	A	630	600	630	600	630
13	closed loop (fuse-switch disconnector)	A	200		200		200
14	off load cable charging (cable switch)	A	20	20	21	21	21
15	earth fault (cable switch)	A	60	60	63	63	63
16	earth fault cable charging (cable switch)	A	35	35	36	36	36
17	Rated cable-charging breaking current (vacuum circuit-breaker)	A	50 (Class C1)		50 (Class C1)		50 (Class C1)
18	Rated transfer current (switch-fuse disconnector)	A	840		750		750
19	Rated making capacity (cable switch) Class E3 - 5 times	kA	50	52,5	50	52,5	50
20	Rated making capacity (downstream earthing switch in F-module) Class E2 - 5 times	kA	2,5		2,5		2,5
21	Rated short time current 2 sec.	kA	20	20	20	20	20
22	Rated short time current 3 sec.	kA	20 [4]		20 [4]		20 [4]
23	Rated short time current 1 sec. (downstream earthing switch in F-module)	kA	1		1		1
24	Rated short-time current (earthing switch)	kA	20	20	20	20	20
25	Rated short-circuit making current (earthing switch)	kA	50	52,5	50	52,5	50
26	Rated filling level for insulation	MPa	0,04	0,04	0,04	0,04	0,04
	Service conditions for indoor equipment according to IEC 62271-1						
	Ambient temperature						
27	Maximum value	°C	+ 40 [2]	+ 40 [2]	+ 40 [2]	+ 40 [2]	+ 40 [2]
28	Maximum value of 24 hours mean	°C	+ 35	+ 35	+ 35	+ 35	+ 35
29	Minimum value	°C	- 25	- 25	- 25	- 25	- 25
30	Altitude for erection above sea level	m	...1500 [3]	...1500 [3]	...1500 [3]	...1500 [3]	...1500 [3]
31	Relative humidity		max 95%	max 95%	max 95%	max 95%	max 95%

[1] Depending on the current rating of the fuse-link
[2] Derating allows for higher maximum temperature
[3] For higher altitude, reduced gas pressure is required
[4] Valid with Interface C bushings (400 series bolted type) only
[5] Class E2 without auto-reclosing

Technical data

General data, enclosure and dimensions

1	Standard to which switchgear complies		IEC / GB		
2	Type of Ring Main Unit		Metal enclosed		
3	Number of phases		3		
4	Whether RMU is type tested		Yes		
5	Pressure test on equipment tank or containers		Until pressure relief device opens		
6	Whether facility is provided with pressure relief device		Yes		
7	Insulating gas		SF_6		
8	Nominal operating gas pressure		1,4 bar abs. at 20°C		
9	Gas diffusion rate		0,1 % p.a.		
10	Expected operating lifetime		30 years		
11	Whether facilities are provided for gas monitoring		Yes, temperature compensated manometer can be delivered		
12	Material used in tank construction		Stainless steel sheet, 2 mm		
13	Busbars		300 mm² Cu		
14	Earth bar (external)		120 mm² Cu		
15	Earth bar bolt dimension		M10		
	Overall dimensions of fully assembled Ring Main Unit		Height	Depth	Width
16	2-way unit	mm	1930	900	910
17	3-way unit	mm	1930	900	1330
18	4-way unit	mm	1930	900	1750
	Compact switchgear (2-, 3- and 4-way units as for RMU)				
19	1-way unit	mm	1930	900	490
20	Distance between units when external extension	mm		50	

Weight table

Maximum weights for standard SafeRing 36 kV:			
2-way DeV	550 kg	2-way DeF	550 kg
3-way CCV	800 kg	3-way CCF	800 kg
4-way CCCV	1050 kg	4-way CCCF	1050 kg
4-way CCVV	1100 kg	4-way CCFF	1100 kg
3-way CCC	750 kg		
4-way CCCC	1000 kg		
SafePlus 36 kV:			
Standard 1-way (C-, D-, De-module)	250 kg		
Standard 1-way (F-, V-module)	300 kg		
2-, 3- and 4-way	as for SafeRing		
M – metering module	600 kg		

Technical data

Operations, degree of protection and colours

1	Means of switch-disconnector operation	Separate handle
2	Means of fuse-switch-disconnector operation	Separate handle and push-buttons and/or opening and closing trip coils
3	Means of circuit-breaker operation	Integrated handle and push-buttons and/or opening and closing trip coils
4	Rated operating sequence of circuit-breaker	O - 0,3 s - CO - 15s - CO
5	Total opening time of circuit-breaker	approx. 40 - 80 ms
6	Closing time of circuit-breaker	approx. 40 - 70 ms
7	Mechanical operations of switch-disconnector	1000 CO (Class M1)
8	Mechanical operations of earthing switch	1000 CO
9	Mechanical operations of circuit-breaker	2000 CO (Class M1)
10	Principle switch-disconnector	2 position puffer switch
11	Principle earthing switch	2 position earthing switch with downstream earthing switch in F-modules
12	Principle circuit-breaker	Vacuum interrupter with axial magnetic field contacts
	Load break switch:	
13	Rated operations on short circuit current (class E3)	5
14	Rated operations mainly active load	100
	Degree of protection:	
15	High voltage live parts, SF_6 tank	IP 67
16	Front covers / operating mechanisms	IP 2X
17	Cable covers	IP 3X
18	Fuse canisters	IP 67
	Colours:	
19	Front covers	RAL 7035
20	Side and cable covers	RAL 7035
21	Switch area	Medium Grey Pantone 429C

Fuse-links

1	Standard fuse-link length	537 mm
2	Standard dimensions	According to DIN 43625
3	Maximum size 36 kV	63 A

Technical data

Curves, number of operations

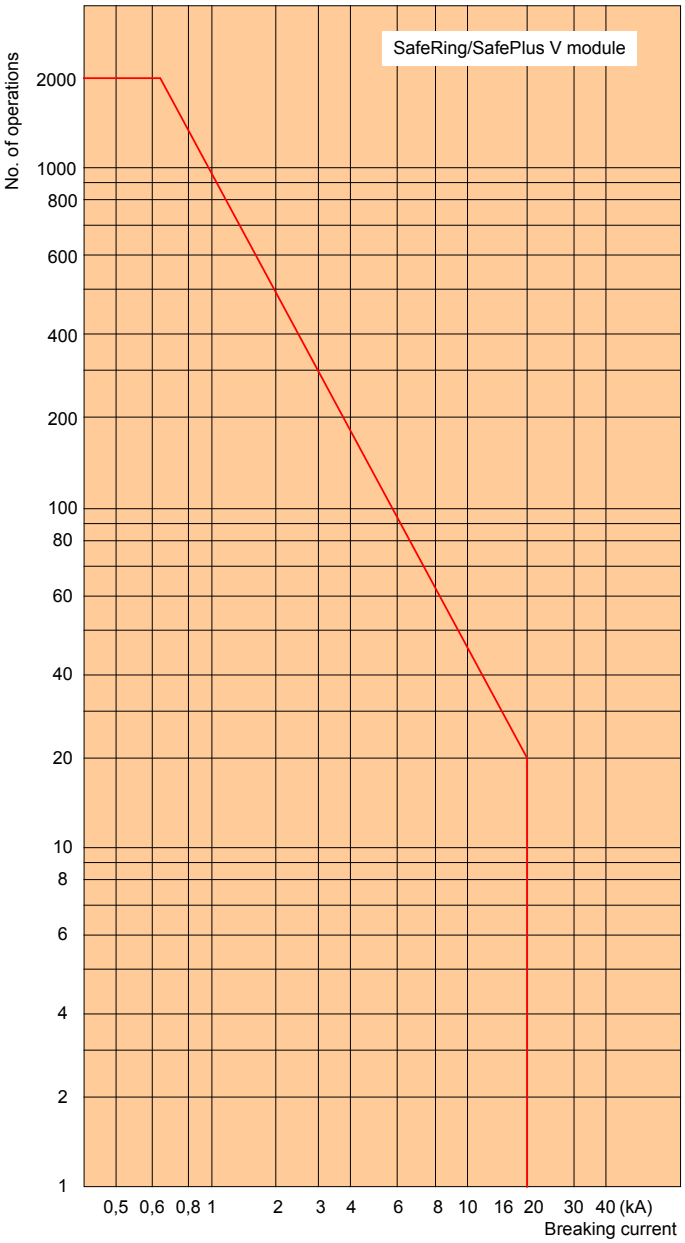

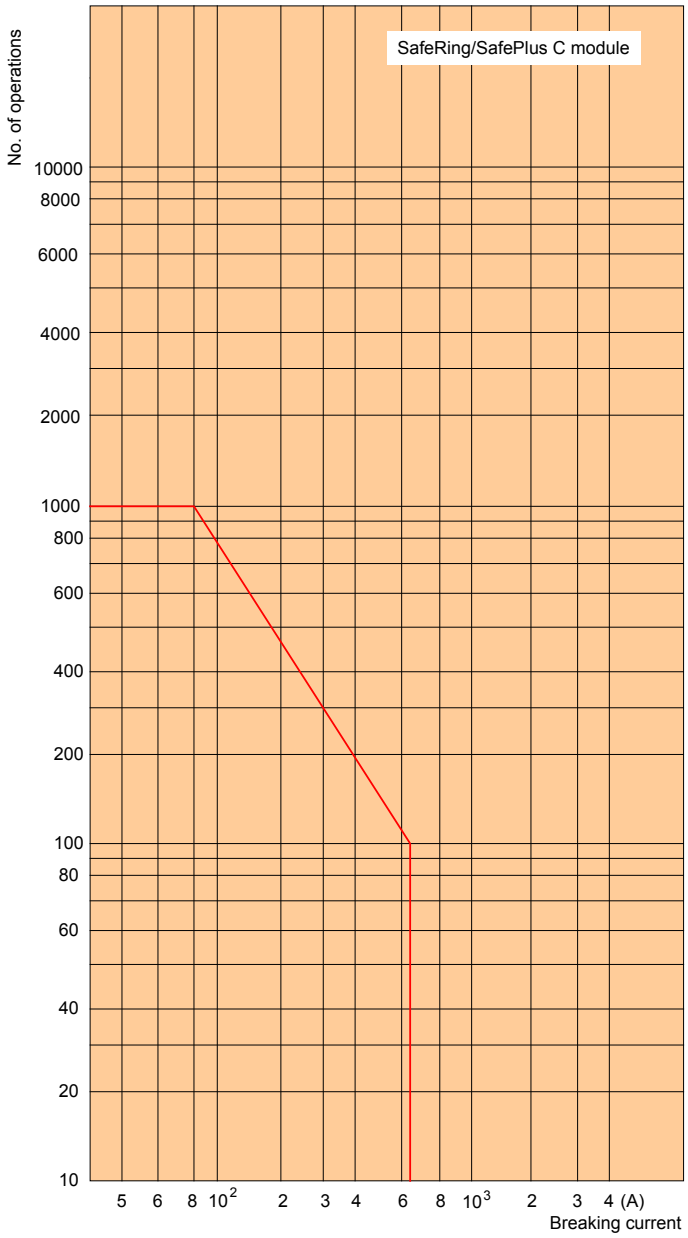

Environmental certification for SF_6-insulated SafeRing/SafePlus36

Life expectancy of product

The product is developed in compliance with the requirements denoted by IEC 62271-200. The design incorporates a life span under indoor service conditions exceeding 30 years. The switchgear is gas-tight with an expected diffusion rate of less than 0.1 % per annum. Referring to the reference-pressure of 1.4 bar, the switchgear will maintain gas-tightness and a gas-pressure better than 1.3 bar at 20oC throughout its designed life span.

Recycling capability

Raw Material	Weight (kg)	% of total weight	Recycle	Environmental effects & recycle/reuse processes
Iron	139,9	31,4	Yes	Separate, utilise in favour of new source (ore)
Stainless steel	130,8	29,3	Yes	Separate, utilise in favour of new source (ore)
Copper	71,9	16,1	Yes	Separate, utilise in favour of new source (ore)
Brass	3,0	0,7	Yes	Separate, utilise in favour of new source (ore)
Aluminium	1,0	0,2	Yes	Separate, utilise in favour of new source (ore)
Zinc	5,1	1,1	Yes	Separate, utilise in favour of new source (ore)
Silver	0,075	0,017	Yes	Electrolysis, utilise in favour of new source
PBT	2,3	0,5	Yes	Make granulate, re-use or apply as energy
PA6-6	5,3	1,2	Yes	
PC	0,8	0,2	Yes	
Other thermoplastic	0,1	0,0	Yes	
Packing foil	0,3	0,1	Yes	High-grade energy additive in refuse incineration
SF_6 gas	7,14	1,6	Yes	ABB AS in Skien reclaims used SF_6 gas
Dielectric oil	0,3	0,1	Yes	Collect / reclaim / regenerate
Wooden pallet	27,8	6,2	Yes	Re-use
Total recycleables	395,815	88,8		
Rubber	1,9	0,4	No	Incinerate energy in rubber
Epoxy compounds	46,5	10,4	No	Contains 60 % quartz sand, incinerate energy in epoxy
Unspecified	1,5	0,3	No	Stickers, film foils, powder coating, lubricates
Total non-recycleables	49,9	11,2		
Total weight **	445,715	100 %		

**)All figures are collected from CCF 3-way unit with fuse canisters.

Lifecycle concept for transport, installation, repair, service and disposal at end of life

ABB is committed to the protection of the environment and adhere to ISO 14001 standards. The unit contains no substances listed on the hazardous substances list.
The unit contains SF_6 with 0,4 bar overpressure in a maintenance free and sealed unit. The unit is a sealed pressure system and restrictions for air transport exist. Units damaged during transport are returned to the manufacturer for inspection and possible repair.

SF_6 is a fluorinated greenhouse gas covered by the Kyoto Protocol and care must be taken not to cause emission of SF_6 and at end-of-life the greenhouse gas must be recovered.

It is ABB's obligation to facilitate end-of-life recycling for our products. In the EU and EEA, the F-Gas Regulation must be followed.
ABB's recycling service is according to IEC 61634 edition 1995 section 6: «End of life of SF_6 filled equipment» and in particular 6.5.2.a: «Low decomposition»: «No special action is required; non-recoverable parts can be disposed of normally according to local regulations.»
We also advise customer always to consult ABB's website : http://www.abb.com/sf6 .
ABB AS, Power Products Division's manufacturing site in Skien is equipped to recover SF_6 gas from discarded switchgears.

ISO-Certificates

Nemko

CERTIFICATE

www.nemko.com

ABB AS

(The Certificate covers sites as described in the Certification Document)

has implemented and maintains a Quality Management System which fulfills Nemko's provisions for Management System Certification and the requirements of the following standard

NS-EN ISO 9001:2008

The certificate covers the following activities:

Sales, development, project management, production, site management, installation, commissioning, service and training of power- and automation systems and products within marine, oil and gas, land-based industry, energy supply and distribution of energy

Oslo, 2009-12-10

Claus Breyholtz
Nemko AS, Certification Department

IQNet

Certificate number: 900740
First time issued: 1992-12-31
Expires: 2011-12-31

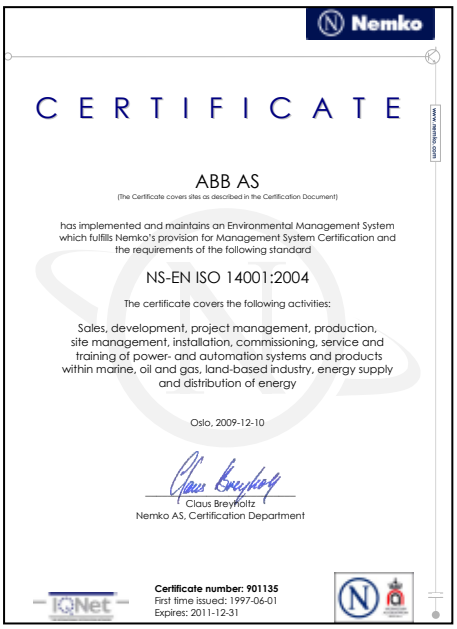

Nemko

CERTIFICATE

www.nemko.com

ABB AS

(The Certificate covers sites as described in the Certification Document)

has implemented and maintains an Environmental Management System which fulfills Nemko's provision for Management System Certification and the requirements of the following standard

NS-EN ISO 14001:2004

The certificate covers the following activities:

Sales, development, project management, production, site management, installation, commissioning, service and training of power- and automation systems and products within marine, oil and gas, land-based industry, energy supply and distribution of energy

Oslo, 2009-12-10

Claus Breyholtz
Nemko AS, Certification Department

IQNet

Certificate number: 901135
First time issued: 1997-06-01
Expires: 2011-12-31

Nemko

CERTIFICATE

www.nemko.com

ABB AS

(The Certificate covers sites as described in the Certification Document)

has implemented and maintains an Occupational Health and Safety Management System which fulfills Nemko's provisions for Management System Certification and the requirements of the following standard

BS OHSAS 18001:2007

The certificate covers the following activities:

Sales, development, project management, production, site management, installation, commissioning, service and training of power- and automation systems and products within marine, oil and gas, land-based industry, energy supply and distribution of energy

Oslo, 2009-12-10

Claus Breyholtz
Nemko AS, Certification Department

IQNet

Certificate number: 907006
First time issued: 2005-12-21
Expires: 2011-12-31

Contact us

ABB AS
Power Products Division
Medium Voltage
P.O.Box 108, Sentrum
N-3701 Skien, Norway
Phone: +47 35 58 20 00
Fax: +47 35 52 41 08
www.abb.com

Text and illustrations are not binding. The right to make alterations is reserved

© Copyright 2012 ABB
All rights reserved

1VDD006114 GB I May 2015

Power and productivity
for a better world™