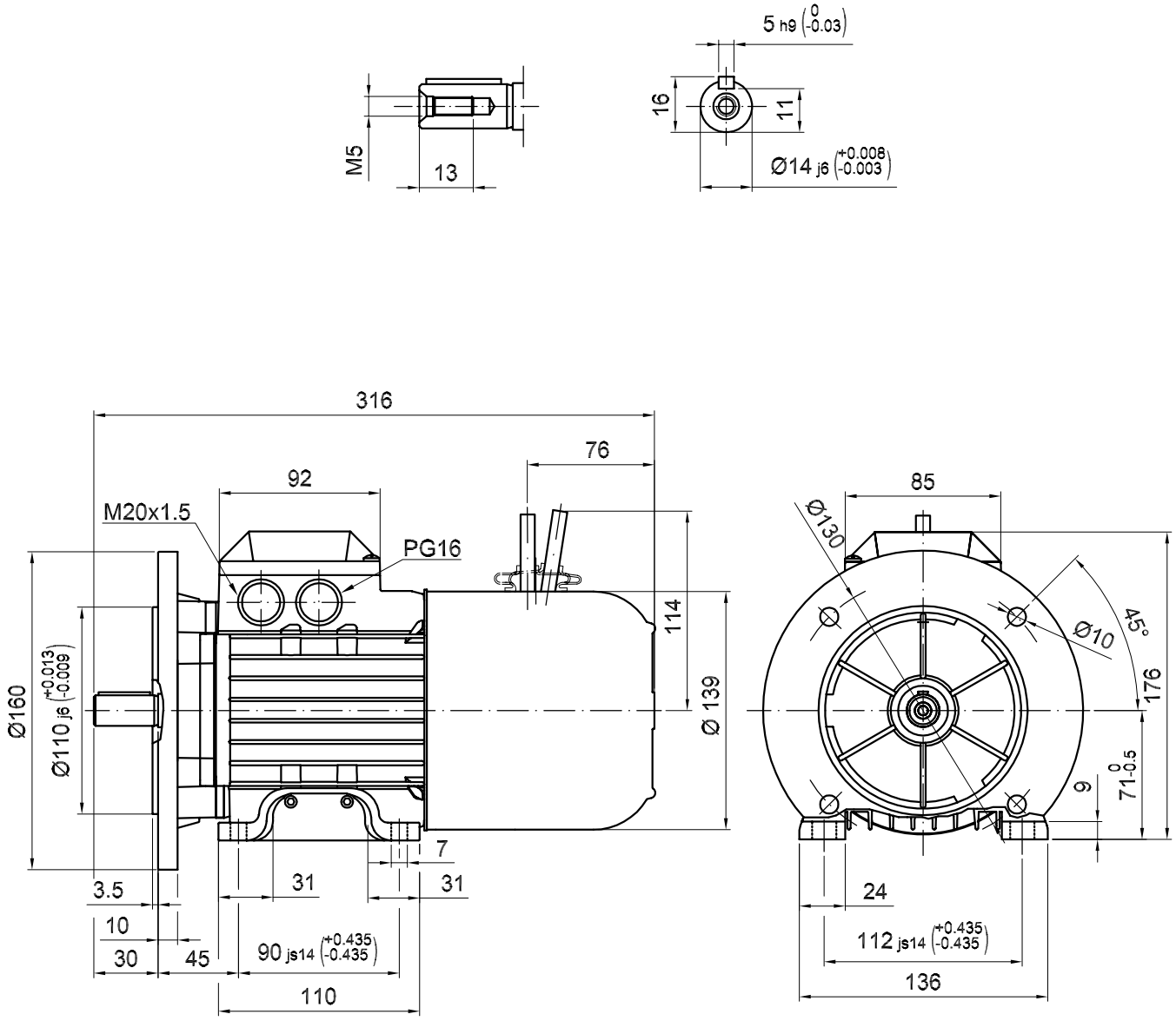

M3VRF/S 71 A/B/C
M3VRF/S 71 BB/BC

Motor Dimension Print	Motor Type : M3VRF/S 71 A/B/C/BB/BC	Document Nº : A1.4370
Description : Brake motor foot and flange mounted IM2001		
Unit : División Motores, Spain Date : 2004-09-22	Issued by : IKM/ J.Muñoz Approved by : IKM/ G.Blanes	Replaces : Replaced by :
ABB Automation Products, S.A.	Customer Reference :	ABB