September, 1990
Supersedes DB 41-491, pages 1-4, dated October, 1989
Mailed to: E, D, C/41-400A

Short Reach 0.2 – 4.35
Medium Reach 0.75 – 20.0
Long Reach 1.3 – 36.0
Device Number: 21

Types KD-10 and KD-11 Compensator Distance Relays

Applications

The Type KD-10 relay provides instantaneous tripping for all combinations of phase-to-phase, two phase-to-ground, and three-phase faults. The relay supplies a single zone of protection for all three phases.

Similar in construction to the KD-10, the KD-11 relay includes the origin in the characteristic impedance circle. It is used as a carrier-start relay in directional comparison blocking schemes, or for time-delay tripping in straight distance relaying. For time-distance applications, both the KD-10 and KD-11 relays may be used in combination with the types TD-4, TD-5, or TD-52 dc transistorized timers.

Both KD-10 and KD-11 relays have indicating contactor switches (ICS) rated 0.2/2.0 A dc. The 0.2 A tap is recommended for applications where a 125- or 250-volt lockout relay, such as the Type WL, is energized. The 2.0 A tap must be used with 48-volt lockout relays and for directional comparison blocking (KA-4) applications. The 2.0 A tap is also recommended for direct trip applications.

Construction

Front and rear views of the Types KD-10 and KD-11 relays show that each relay contains three compensators (air-gap transformers): T_A, T_{AB}, and T_{BC}; three tapped autotransformers; two four-pole, cylinder-type operating units; and an indicating contactor switch (ICS).

Compensator T_A is a two-winding air-gap transformer with one primary current winding. Compensators T_{AB} and T_{BC} are three-winding air-gap transformers with two primary current windings, each of which has seven taps terminating at the tap block. A single tap divides the secondary winding of each compensator into two sections. One section is connected subtractively in series with the relay terminal voltage; the other is connected to a potentiometer and a fixed loading resistor. The resistor is used for adjusting the maximum torque angle of the relay.

The three tapped autotransformers permit expansion of the basic range of the compensator's secondary by ±18 percent, in three percent steps. The units can be connected additively or subtractively in the compensator secondary circuit.

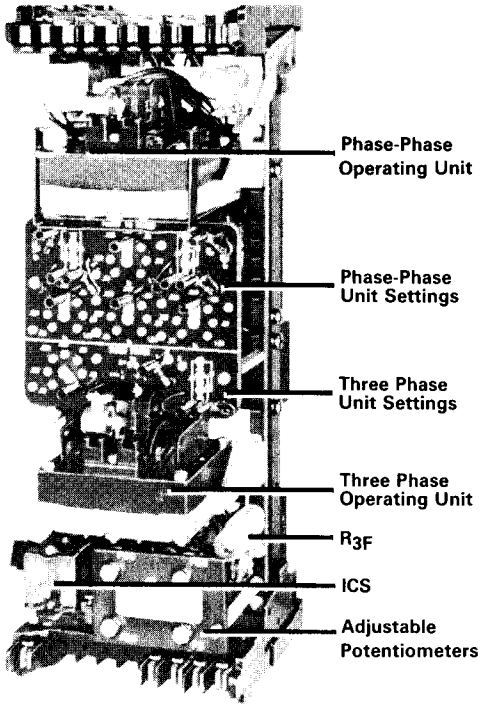

KD-10 Chassis (Front)

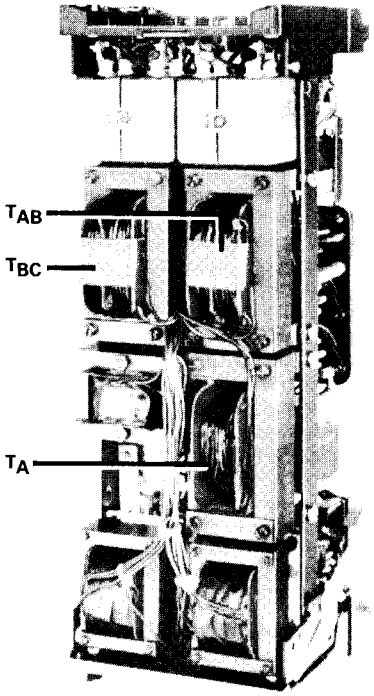

KD-10 Chassis (Rear)

Connected open delta, the two four-pole, cylinder-type operating units operate as three-phase induction units. One unit is phase-to-phase, the other three-phase. Each unit produces a contact closing torque when a negative-phase sequence voltage is applied to its terminals. Contact opening torque is produced when a positive-phase sequence voltage is applied. In other words, the phase sequence of the voltage applied to the terminals determines whether the torque is restraining or operating.

The indicating contactor switch (ICS) relieves the main relay contacts of carrying the relatively heavy trip coil current. The ICS consists of a small dc-operated clapper-type device connected in the trip circuit. The main contacts of the Types KD-10 and KD-11 relays will close 30 A at 250 Vdc, and the seal-in contact of the ICS will carry this current long enough to trip a breaker. The ICS indicator target can be reset from outside the case by using a push-rod located at the bottom of the relay cover.

General Characteristics

Impedance for short-reach, medium-reach, and long-reach relays can be set for any value in the range of 0.2-4.35, 0.75-20.0, and 1.3-36.0 ohms, respectively.

For all phase-to-phase units, the maximum torque angle is factory set at 75°. However, it may be reset in the field for any value from 60° to 80°.

For medium- and long-reach, three-phase units, the maximum torque angle is also factory set at 75° and may similarly be reset for any value from 60° to 80°. On the short-reach, three-phase unit, maximum torque angle is factory set at 60°, but may be reset for any value from 45° to 75°. For all ranges, the 90° setting is approached when potentiometer P_3 is open circuited.

KD-10 Phase-to-Phase Unit
Distance characteristics: the KD-10 phase-to-phase unit responds to all phase-to-phase faults and most two-phase-to-ground faults. It does not respond to load current, synchronizing surges, or out-of-step conditions. The characteristic circle plotted for this unit on the R-X diagram (Figure 1) is significant only in the first quadrant, where resistance and reactance values are positive. This portion of the circle describes the relay's performance when arc resistance is involved in the fault. If the transmission line includes a series capacitor, a small portion of the fourth quadrant, where resistance values are positive and reactance values negative, could also be significant.

As shown by the R-X diagram, the circle of the phase-to-phase unit is dependent on source impedance Z_S. However, the circle always goes through the line balance-point impedance; and the reach at the compensator and line angle is constant, regardless of the system source impedance. Since a relatively high source impedance broadens the characteristic circle, on short lines the phase-to-phase unit makes a greater allowance for resistance in the fault. The characteristics of the phase-to-phase unit approach those of a reactance relay more closely as the line being protected becomes shorter with respect to the source impedance behind the relay without being operated under load conditions.

When operating on an actual transmission system, the phase-to-phase unit is inherently directional. No separate directional unit is required.

Since the phase-to-phase unit is not responsive to balanced conditions, it need not be blocked by the out-of-step relays. Phase-to-phase or phase-to-phase-to-ground faults occurring during out-of-step can be cleared at high speed by this unit.

Sensitivity: Figure 2 plots relay reach, in percent of tap block setting, against relay terminal voltage. Overreach due to dc transients need not be considered when setting the KD-10 relay. The compensators are not sensitive to the dc transients that accompany faults.

KD-10 Three-Phase Unit
Distance characteristics: As Figure 3 shows, the three-phase unit has a characteristic circle which passes through the origin. This circle is independent of source impedance.

If a solid three-phase fault occurs at the relay location, the YZ voltage drops to zero, and the relay could not distinguish an internal from an external fault without the resonant circuit added to the relay's YZ voltage circuit. This resonant circuit allows this voltage to collapse gradually (at rated frequency) enabling the relay to determine whether the fault is inside the protected line section, or behind the relay.

To accommodate more arc resistance, the maximum torque angle of the short range KD-10 three-phase unit may be set at less than the line impedance angle. The 60° torque angle set at the factory may be readjusted to as low as 45°.

The three-phase unit is inherently directional and does not require a separate directional unit.

KD-11 Three-Phase Unit
Distance characteristics: The characteristic circle of the KD-11 three-phase unit includes the origin (see Figure 4).

Sensitivity: on current only, the KD-11 three-phase unit will close the left-hand contact for a relay current of 3 A or more, with T set for 5.8 (or T + 10.0 for the 1.3-36.0 ohm relay).

Impedance Circle for Three-Phase Unit in KD-10 Relay

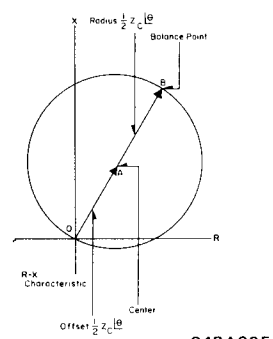

Figure 3

Impedance Circle for Phase-to-Phase Unit in Type KD-10 and KD-11 Relays

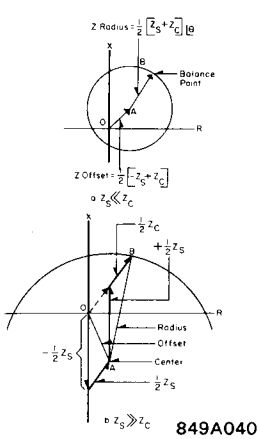

Figure 1

Impedance Curve for Three-Phase Unit in KD-10 and KD-11 Relays, (Medium and Long Reach)

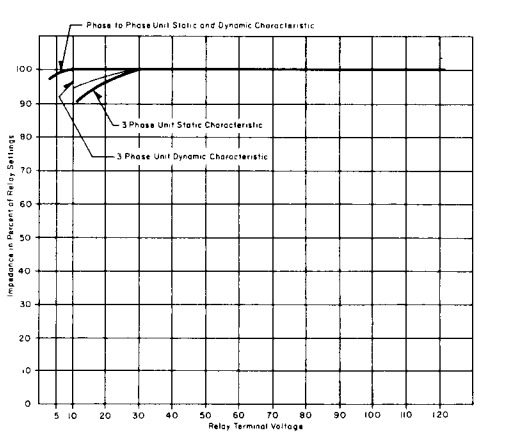

Figure 2

Impedance Circle for Three-Phase Unit of KD-11 Relay

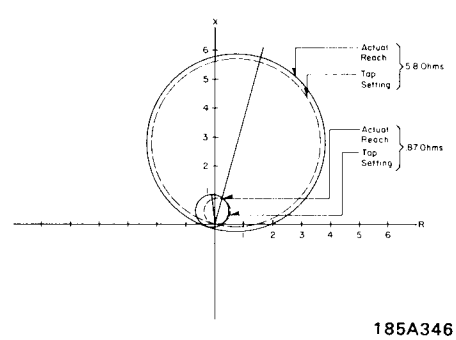

Figure 4

External Schematic for Type KD-10/KD-11/TD-4 Relaying

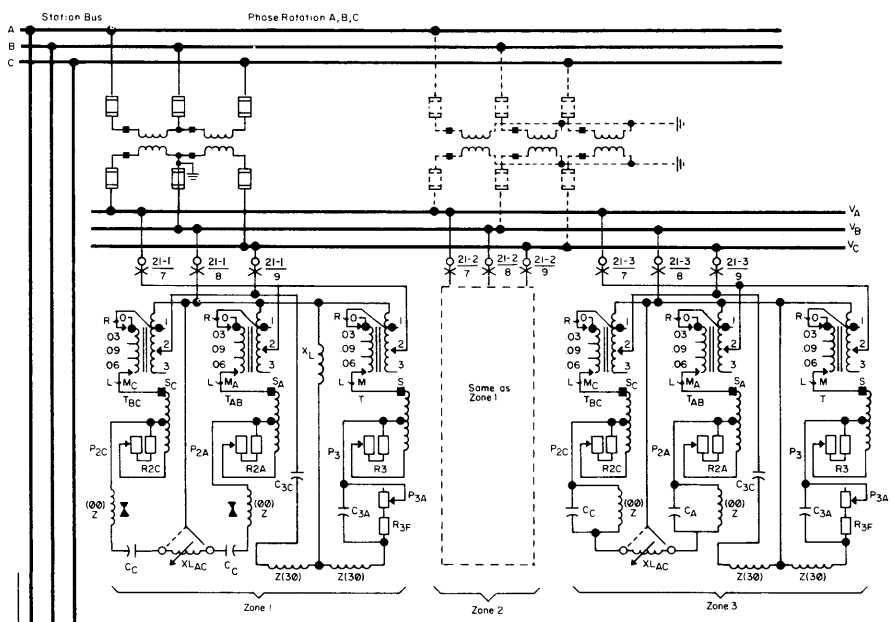

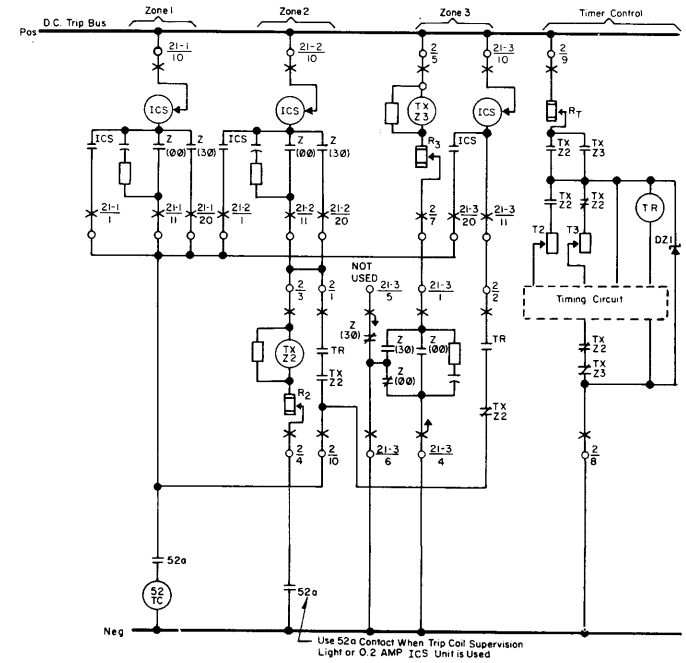

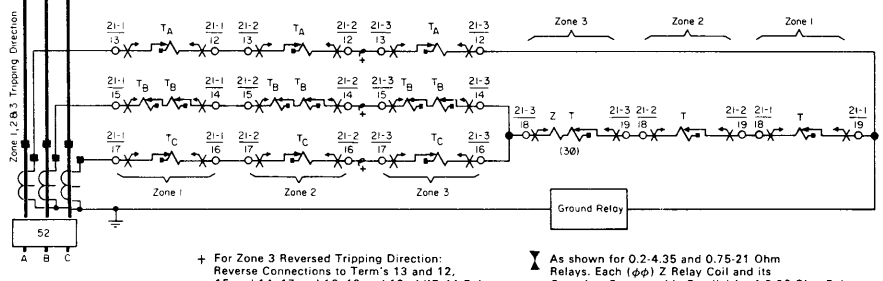

+ For Zone 3 Reversed Tripping Direction: Reverse Connections to Term's 13 and 12, 15 and 14, 17 and 16, 19 and 18 of KD-11 Relay

As shown for 0.2-4.35 and 0.75-21 Ohm Relays. Each (ϕϕ) Z Relay Coil and its Capacitor Connected in Parallel for 1.3-36 Ohm Relay.

Alternate Connection

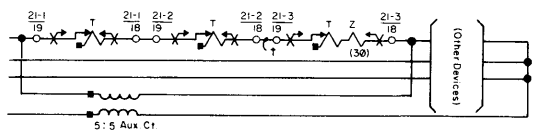

Device Number Chart

Device No.	Zone	Device Relay	Device
21-1	1	KD-10	
21-2	2	KD-10	
21-3	3	KD-11	
2		TD-4 Timing	
52			Pwr. Ckt. Bkr.
52a			Bkr. Aux. Cont.
52TC			Bkr. Trip Coil

Figure 5

265C199

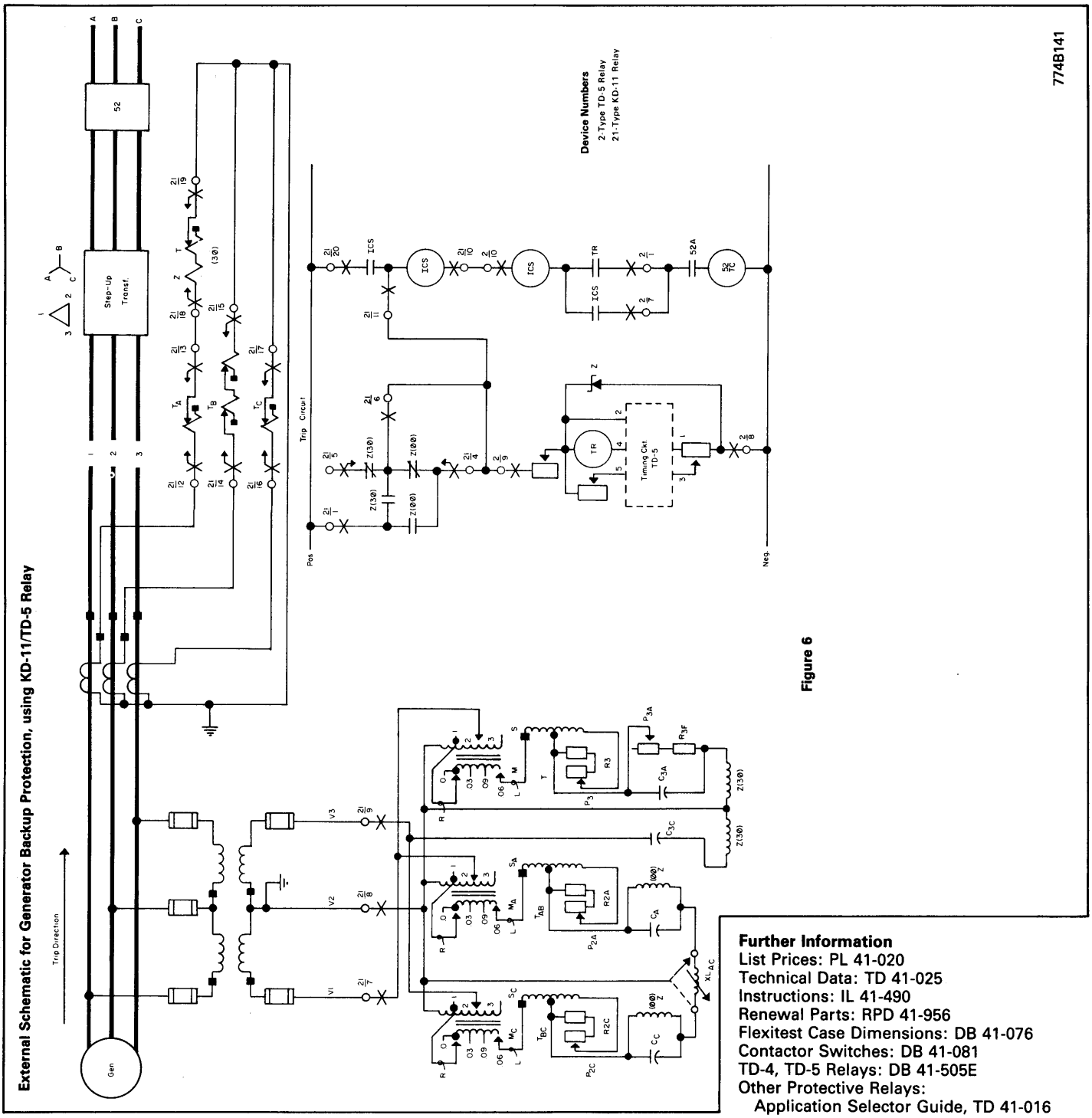

Figure 6

Further Information
List Prices: PL 41-020
Technical Data: TD 41-025
Instructions: IL 41-490
Renewal Parts: RPD 41-956
Flexitest Case Dimensions: DB 41-076
Contactor Switches: DB 41-081
TD-4, TD-5 Relays: DB 41-505E
Other Protective Relays:
Application Selector Guide, TD 41-016

Printed in U.S.A.

December, 1990
Supersedes TD 41-020, Types KD-10 and KD-11 on page 75, dated November, 1987
Mailed to: E, D, C/41-400A

Short Reach 0.2-4.35
Medium Reach 0.75-20.0
Long Reach 1.3-36.0

Types KD-10 and KD-11 Compensator Distance Relays

K-Dar Compensator Distance Relaying

Phase Protection – 1, 2, 3, or 4 Zones – 5 Amperes, 60 Hertz, Spst-cc Contacts (Device Number: 21)

Relay Function	Relay Complement (Order each relay separately by style number)									
	One Zone		Two Zones				Three Zones		Four Zones	
	A	B	A	B	C	D	A	B	Primary	Backup
1st Zone Phase	KD-10	KD-5	KD-10	KD-10	KD-10	KD-10	KD-10	KD-10	KD-10	....
2nd Zone Phase	....	....	KD-10	KD-11	KD-10	SD-2	KD-10	KD-10	KD-10	KD-10
3rd Zone Phase	....	....	....	....	....	....	KD-11	KD-11	....	KD-10
Timer⑦	....	....	TD-5⑧	TD-5	CO-7⑨	....	TD-4	TD-52	TD-5	TD-4

Type	Range: Secondary Ohms – Line-to-Neutral	Volts Dc	Maximum Torque Angle Factory Setting – Degrees Current Lags Voltage		Indicating Contactor Switch Amps Dc③	**Relay Data**		
			ϕ - ϕ Unit	3ϕ Unit		Internal Schematic	Style Number	Case Size
KD-3① Single phase	Short reach .75-20,	...	...	75°	0.2/2.0	185A348	290B658A09	**FT-31**
	Long reach 1.13-30	...			1.0	185A378	290B658A10	
KD-5① Three phase	.2-4.35	...	45°④	35°④	0.2/2.0	188A426	292B335A22	**FT-42**
		...	45°④	35°④	1.0	188A421	292B335A21	
	1.1-30	...	35°④	30°	0.2/2.0	836A681	292B335A26	
			45°④	35°	0.2/2.0		292B335A27	
KD-10 Three phase	0.2-4.5	...	75°	60°	0.2/2.0	3490A81	719B195A10Ⓢ	**FT-42**
			60°	45°		3490A81	719B195A16⑪	
			75°	60°		3507A74	719B195A20⑫	
			75°	75°		3507A64	719B195A22⑩⑬	
			75°	60°	1.0	3514A65	719B195A25	
	0.75-21	...	75°	75°	0.2/2.0	3507A70	719B195A11Ⓢ	
			75°	75°		3499A68	719B195A13⑩	
			60°	60°		3507A70	719B195A14Ⓢ⑪	
			75°	75°	1.0	3514A66	719B195A26	
	1.3-37	...	75°	75°	0.2/2.0	880A988	719B195A12Ⓢ	
			75°	75°		880A971	719B195A09⑩	
			75°	75°	1.0	3514A67	719B195A27	
KD-11 Three phase	0.2-4.5	...	75°	60°	0.2/2.0	3512A02	719B196A17	**FT-42**
			75°	60°		3514A24	719B196A18⑩	
			75°	60°	1.0	3514A70	719B196A21	
	0.75-21	...	75°	75°	0.2/2.0	3490A82	719B196A11Ⓢ	
			75°	75°		3507A72	719B196A15⑩	
			75°	75°	1.0	3514A68	719B196A19	
	1.3-37	...	75°	75°	0.2/2.0	880A989	719B196A12Ⓢ	
			75°	75°		880A972	719B196A09⑩	
			75°	75°	1.0	3514A69	719B196A20	

Ⓢ Denotes item available from stock.
① 50-Hertz relays and auxiliaries can be supplied at same price. Order "Similar to Style Number ....., except 50 Hertz".
③ **ICS:** Indicating Contactor Switch (dc current operated) having seal-in contacts and indicating target which are actuated when the ICS coil is energized at or above pickup current setting. Suitable for dc control voltages up to and including 250 volts dc. Two current ranges available:
(1) 0.2/2.0 amps dc, with tapped coil.
(2) 1.0 amp dc, without taps.

Rating of ICS unit used in specific types of relays is shown in price tables. All other ratings must be negotiated.

When ac current is necessary in a control trip circuit, the ICS unit can be replaced by an **ACS** unit.

The ACS unit may be supplied in place of an ICS unit at no additional cost. Specify system voltage rating on order.

④ Standard setting.

⑦ Ratings and styles of TD-4, TD-5, and TD-52 timing relays are listed on pages 84, 85. Order by style number.
⑧ TD-52 relay may be substituted for TD-5 relay.
⑨ CO-7 timer is a 2-unit CO-7 relay in FT-31 case. If other CO relay characteristics are desired, see pages 10 and 11.
⑩ Three phase unit is separately polarized.
⑪ 60° ϕ – ϕ unit has a slightly reduced range.
⑫ Contacts like KD-11 relay (make-break contacts).
⑬ ϕ – ϕ and 3ϕ units contacts to separate terminals.