Substation Automation Products

Distributed busbar protection REB500 Application Manual

Power and productivity
for a better world™

Document ID: 1MRK 505 295-UEN
Issued: May 2015
Revision: -
Product version: 8.10

Copyright

Trademarks

Warranty

Please inquire about the terms of warranty from your nearest ABB representative.

ABB AB

Substation Automation Products

SE-721 59 Västerås

Sweden

Telephone: +46 (0) 21 32 50 00

Facsimile: +46 (0) 21 14 69 18

http://www.abb.com/substationautomation

Disclaimer

The data, examples and diagrams in this manual are included solely for the concept or product description and are not to be deemed as a statement of guaranteed properties. All persons responsible for applying the equipment addressed in this manual must satisfy themselves that each intended application is suitable and acceptable, including that any applicable safety or other operational requirements are complied with. In particular, any risks in applications where a system failure and /or product failure would create a risk for harm to property or persons (including but not limited to personal injuries or death) shall be the sole responsibility of the person or entity applying the equipment, and those so responsible are hereby requested to ensure that all measures are taken to exclude or mitigate such risks.

This document has been carefully checked by ABB but deviations cannot be completely ruled out. In case any errors are detected, the reader is kindly requested to notify the manufacturer. Other than under explicit contractual commitments, in no event shall ABB be responsible or liable for any loss or damage resulting from the use of this manual or the application of the equipment.

Conformity

This product complies with the directive of the Council of the European Communities on the approximation of the laws of the Member States relating to electromagnetic compatibility (EMC Directive 2004/108/EC) and concerning electrical equipment for use within specified voltage limits (Low-voltage directive 2006/95/EC). This conformity is the result of tests conducted by ABB in accordance with the product standards EN 50263 and EN 60255-26 for the EMC directive, and with the product standards EN 60255-1 and EN 60255-27 for the low voltage directive. The product is designed in accordance with the international standards of the IEC 60255 series.

Safety information

Dangerous voltages can occur on the connectors, even though the auxiliary voltage has been disconnected.

Non-observance can result in death, personal injury or substantial property damage.

Only a competent electrician is allowed to carry out the electrical installation.

National and local electrical safety regulations must always be followed.

The frame of the IED has to be carefully earthed.

Whenever changes are made in the IED, measures should be taken to avoid inadvertent tripping.

The IED contains components which are sensitive to electrostatic discharge. Unnecessary touching of electronic components must therefore be avoided.

Table of contents

Section 1 Introduction

1.1 This manual

The application manual contains application descriptions and setting guidelines for the REB500. The manual can be used to find out when and for what purpose a typical protection function can be used. The manual can also be used when calculating settings.

1.2 Intended audience

This manual addresses the protection and control engineer responsible for planning, pre-engineering and engineering.

The protection and control engineer must be experienced in electrical power engineering and have knowledge of related technology, such as protection schemes and communication principles.

1.3 Product documentation

Manual	Document number
Product Guide	1MRK 505 319-BEN
Application Manual	1MRK 505 333-UEN
Technical Manual	1MRK 505 335-UEN
Operation Manual	1MRK 500 121-UEN
Commissioning Manual	1MRK 505 336-UEN
Cyber Security Guideline	1MRK 511 345-UEN
Communication Protocol Manual, IEC 61850	1MRK 511 342-UEN
Communication Protocol Manual, IEC 60870-5-103	1MRK 511 343-UEN

1.4 Symbols and conventions

1.4.1 Symbols

The electrical warning icon indicates the presence of a hazard which could result in electrical shock.

The warning icon indicates the presence of a hazard which could result in personal injury.

The caution icon indicates important information or warning related to the concept discussed in the text. It might indicate the presence of a hazard which could result in corruption of software or damage to equipment or property.

The information icon alerts the reader of important facts and conditions.

The tip icon indicates advice on, for example, how to design your project or how to use a certain function.

Although warning hazards are related to personal injury, it is necessary to understand that under certain operational conditions, operation of damaged equipment may result in degraded process performance leading to personal injury or death. Therefore, comply fully with all warning and caution notices.

1.4.2 Document conventions

A particular convention may not be used in this manual.

- Abbreviations and acronyms in this manual are spelled out in the glossary. The glossary also contains definitions of important terms.
- Push button navigation in the LHMI menu structure is presented by using the push button icons, e.g.:

  To navigate the options, use  and  .

- HMI menu paths are presented in **bold**, e.g.:

  Select **Main menu/Settings**.

- LHMI messages are shown in `Courier` font, e.g.:

  To save the changes in non-volatile memory, select `Yes` and press .

- Parameter names are shown in *italics*, e.g.:

  The function can be enabled and disabled with the *Operation* setting.

- The * character after an input or output signal name in the function block symbol given for a function indicates that the signal must be connected to another function block in the application configuration to achieve a valid application configuration.

Section 2 Overview

The digital busbar system REB500 belongs to the generation of fully digital protection devices, i.e. the analog-to-digital conversion of the input variables takes place immediately after the input transformers and all further processing of the resulting digital signals is performed by programmable microprocessors.

The main features which enable the REB500 to fully satisfy the demands placed on a modern protective device with respect to cost-effectiveness and functionality are compact design, just a few different types of hardware units, modular software and continuous self-supervision and diagnosis.

The structure of the protection system is bay-oriented. The bay units may be located close to the switchgear in control and protection cubicles or in a central relay room. Distributed bay units are connected to the central unit by an optical fiber process bus. The central unit collects all the data and executes the protection algorithms and auxiliary functions at station level.

The standard application of the protection system is that of busbar protection. Provision is made, however for integrating optional functions to detect, for example, breaker failure, end zone faults, overcurrent and circuit-breaker pole discrepancy.

2.1 Application

The digital busbar protection has been designed for the high-speed selective protection of MV, HV and EHV busbars in 50 and 60 Hz power systems. Because of the flexible and modular structure of both hardware and software, the protection can be simply configured to suit the particular busbar arrangement.

It is thus able to protect all busbar layouts, whether a single set of busbars or quadruple busbars with a transfer busbar. It is similarly applicable to ring busbars and 1½ breaker schemes. The maximum capacity for a quadruple busbar system is 60 feeders (60 bay units) with a maximum of 7 longitudinal breakers, 8 sections of busbars and 32 protection zones.

The protection system detects phase and ground faults in solidly grounded and impedance grounded power systems. The digital scheme only evaluates the primary system currents. The main CTs do not have to fulfill any special requirements as is the case, for example, with a high-impedance scheme. Even in the event of saturation of the main CTs, the protection is still able to discriminate correctly between internal and external faults.

2.2 System capacity

The protection system is applicable to all busbar layouts, whether a single set of busbars or quadruple busbars with a transfer busbar. It is similarly applicable to 1½ breaker schemes, ring busbars and duplex stations. The maximum capacity is 60 bay units (one per feeder or one per set of CTs on a bus-tie breaker; in the case of a longitudinal isolator, either a separate bay unit is needed or alternatively it is included in an existing bay unit). Up to 32 protection zones can be selectively protected and tripped.

It is possible to apply REB500 system without making use of its basic busbar protection function (e.g. as an independent breaker failure and end zone protection).

The **application** of the protection system in complex stations, 1½ breaker schemes and duplex configurations is described separately in **Section 11**.

The following are examples of the principal busbar configurations:

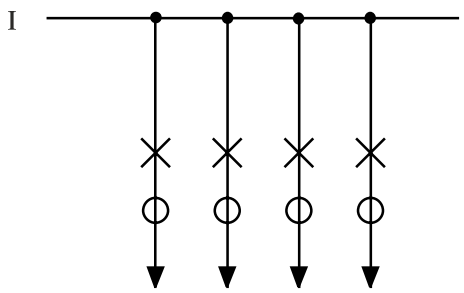

Figure 1 Single busbar

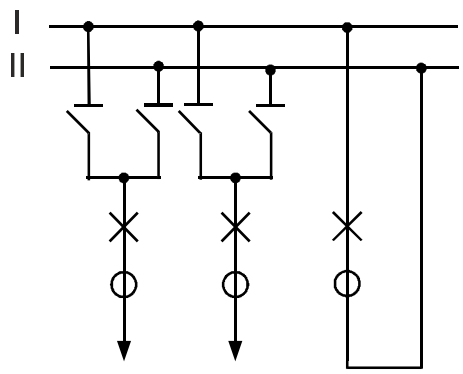

Figure 2 Double busbar

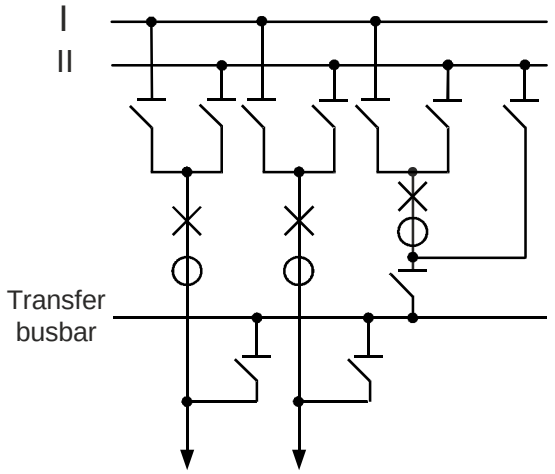

Figure 3 Double busbar with transfer busbar

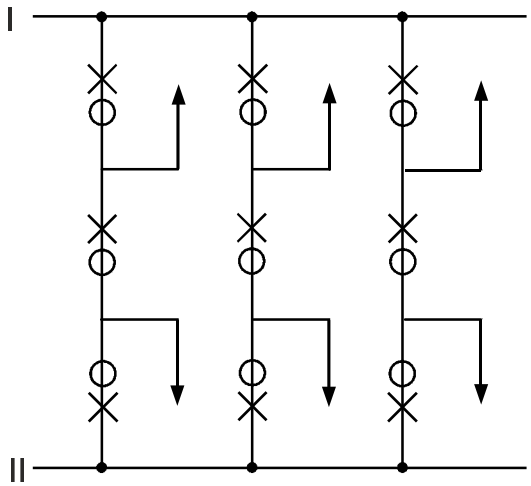

Figure 4 1½ breaker scheme

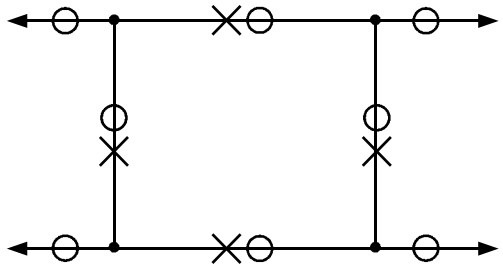

Figure 5 Ring busbar

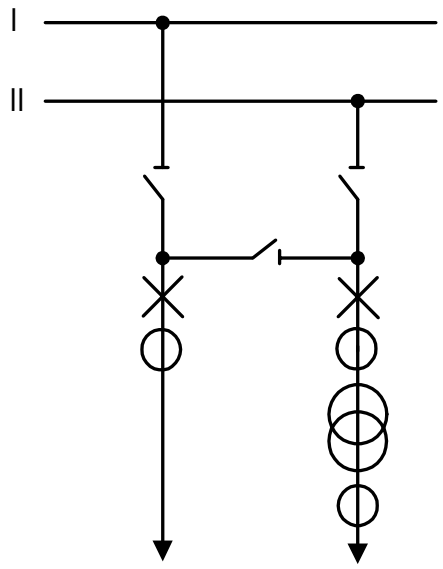

Figure 6 Duplex station

Section 3 Software

3.1 System software REBSYS

This software package is installed on the system processor board. It includes all the system functions and also the local HMI (see Section 3.4) and the station monitoring system (see Section 5).

3.2 Customer's database

The database was created according to the customer's specification. It is installed on the master CPU in the central unit and for the most part can be edited using HMI500.

3.3 Human/machine interface program HMI500

The human/machine interface (=HMI) program HMI500 provides convenient communication with the protection system to

- view measurements and statuses
- set the protection functions
- configure the system
- commission and maintain the system
- download data to the system
- control the integrated disturbance recorder
- control the integrated event recorder

3.4 Local human/machine interface (local HMI)

The local HMI program forms an integral part of the system software REBSYS.

Accessed via the control unit on the central unit or a bay unit, the local HMI software enables the following to be viewed, **but for safety reasons not changed:**

- current and voltage measurements
- statuses of inputs and outputs
- alarms

- system settings
- settings of the protection functions installed

3.5 Station monitoring system (SMS)

The REB500 system can be integrated in a station monitoring system (SMS). Refer to the description of the station monitoring system (SMS) for further details.

3.6 Station automation system (SAS)

The REB500 system can be integrated in a station automation system (SAS). Refer to the description of the station automation system (SAS) for further details.

Section 4 Signal acquisition and processing

4.1 Analog inputs

The protection system processes the current measurements digitally in the bay units. For this purpose, 80 measurements a period are made of the busbar feeders' currents. At a power system frequency of 50 Hz, this corresponds to a sampling rate of 4.0 kHz and at 60 Hz of 4.8 kHz. The analog/digital converter has a range of 16 Bit.

Should a CT saturate, the signals are compensated by signal processing according to the maximum prolongation principle (see below). The signals then pass through a Fourier filter, which separates the real and imaginary fundamental frequency components. All the other harmonics are suppressed.

These components are evaluated by all the protection functions in the bay unit. The disturbance recorder monitors the original non-compensated secondary current signals. The current signals are also transferred to the central unit, which executes the busbar protection function.

The optionally available voltages are measured essentially the same as currents with the exception that maximum prolongation is not applied.

4.2 Maximum prolongation principle

The maximum prolongation principle is a method patented by the manufacturer for additionally processing the current signals to enable the protection algorithms to detect faults discriminatively even if CTs are saturating.

Basically it uses the maximum value detected in the sampling window should a CT saturate.

By prolonging the maximum value, the signal is compensated such that the best possible approximation of the **phase-angle** and **amplitude** of the unsaturated signal is achieved.

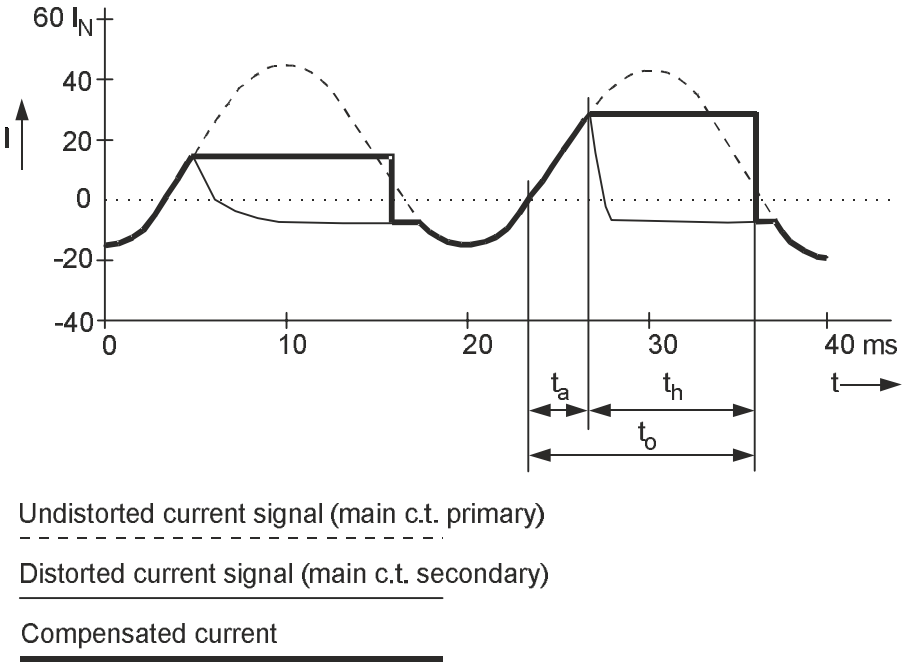

Figure 7 Maximum prolongation principle in the case of CT

Time t_0 is the interval between the last zero crossing before the maximum value is detected and the end of the prolongation period. At a power system frequency of 50 Hz, this time is 12.5 ms (at 60 Hz, 10.4 ms). The rise time from the zero crossing to the maximum value is defined as t_a. The difference between t_o and t_a is time t_h, which is then the time the maximum value in the sampling window is prolonged. The longer time t_a, the shorter the maximum value is prolonged.

Consider the following example:

High through-fault currents can cause one or more CTs to saturate and could give rise to a false differential current, which, if no precautions were taken, might be interpreted as an internal fault. The maximum prolongation function maintains protection stability and discrimination in the presence of CT saturation, because the signals transferred are a good approximation of the phase-angle **and** amplitude of the unsaturated signals (see Section 7. “Busbar protection”).

4.3 Binary inputs

Optocouplers electrically insulate all the binary inputs.

They pick up when the input voltage remains above 80% of the rated auxiliary voltage for at least 20 ms and reset when it is below 65% for longer than 20 ms.

The standard binary inputs are all equipped with anti-bounce filters. The software anti-bounce filter has no influence on a signal's time stamp, i.e. the time stamp is determined by the first occurrence of the signal at the input of the optocoupler.

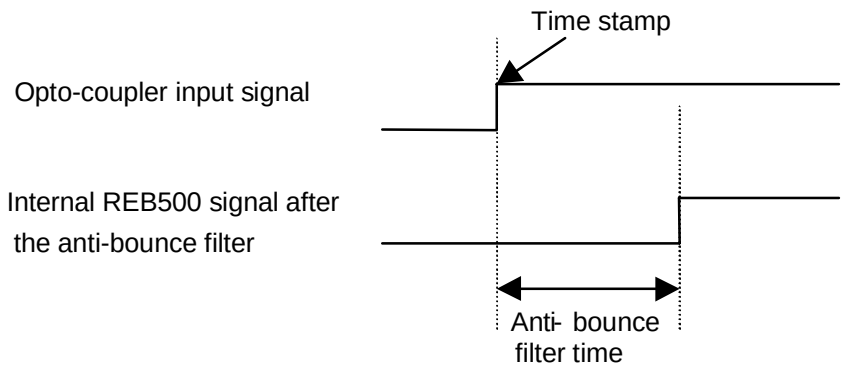

Figure 8 Anti-bounce filter

The anti-bounce time for the special signals below is set to the minimum of 2 ms instead of the standard time (normally 20 ms) set generally for the system:

- All disturbance recorder input signals "167nn_Start DR_x" and "36705_General Start DR"
- Breaker failure input signals "137nn_Start BFP_Lx" and "13705_External Start BFP"
- "31805_External release BB zone" and "11605_External release Trip"
- The signals "11510…11525_Supervison aux. voltage_x" are set to a fixed anti-bounce time of 10 ms.

Should several signals be configured for a common optocoupler input and **one** of them have a minimum **anti-bounce time** of 2 ms, then **2 ms applies for all the signals**. This kind of configuration should be avoided wherever possible.

Due to system constraints the trigger for the disturbance recorder can be delayed by a maximum of one base-period.

A distinction is made between input signals with a slow response and those with a fast response. Internally, REB500 processes the process bus signals in fast and slow cycles according to their priority.

Table 1 Signal response times

Signal response	Description
slow	These signals must be maintained at the binary input for at least 50 ms plus the anti-bounce time and are processed by the slow cycle.
fast	These signals must be maintained at the binary input for at least 6 ms plus the anti-bounce time and are processed by the fast cycle.

4.4 Binary outputs

The bay units generate two kinds of binary output signals, tripping commands and logic signals. The central unit only generates logic signals.

Binary output signals are generated by the processors in the central and bay units as determined by signal logics.

Tripping commands are written in capital letters to distinguish them from logic signals.

Output signals can be assigned to auxiliary output relays to actuate either a tripping or signaling circuit. As a safety precaution, it is impossible to assign tripping commands and logic signals to the same output relay, i.e. tripping commands can only be combined with other tripping commands and logic signals with other logic signals. For example, the signals “21305_Trip” and “21105_EXTERNAL TRIP” cannot be configured to operate the same output contact.

Section 5 Self-supervision

To ensure the maximum possible reliability, the REB500 is equipped with a self-supervision function, which enables it to respond quickly to any hardware (HW) or software (SW) errors. Some, such as an error in transmission via the process bus, only affect a single data set and are generally of a transient nature. A serious error would mean, for example, that reliable operation could no longer be guaranteed. It is important to detect errors of this kind and to take the appropriate action, which can include blocking the protection functions and tripping outputs.

The self-supervision and diagnostic function ensures the high availability of the busbar protection. Errors and defects are immediately detected and signaled so that corrective action can be taken without delay.

The self-supervision software forms part of the REBSYS system software (see Section 3.1).

5.1 Diagnostic program

The task of the diagnostic program is to manage (start and stop) all the other applications (e.g. protection functions and binary inputs and outputs) and process the data of the self-supervision function.

The system SW is divided into sub-systems that perform specific applications (protection functions, binary inputs and outputs, database controller etc.). The structure of the diagnostic program reflects the structure and distributed architecture of the protection system, i.e. it is also distributed between every module of the central unit and bay units having a microprocessor.

Each level in the structure of the diagnostic program reports the status of the applications at the same or lower levels to the next level up. Enabling (release) signals are distributed from top to bottom. As soon as the diagnostic program detects a critical fault, it reports the corresponding status upwards and blocks the downwards distribution of the enabling signal. The protection system thus propagates the blocking of the enabling signal to block all tripping outputs. In the case of critical faults, the protection system is shut down and restarted.

5.2 Self-supervision system

The self-supervision system covers software and hardware and includes in addition to the internal signals the monitoring of the external input values such as current values (CT supervision) and the positions of the auxiliary contacts on isolators and circuit-breakers (busbar replica).

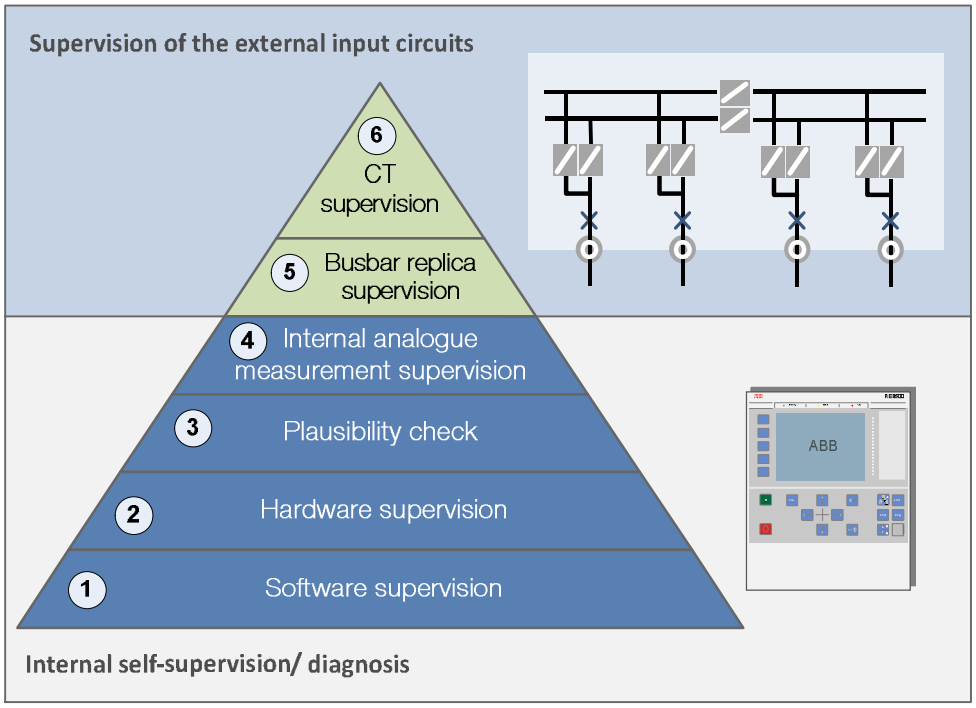

Figure 9 Structure of the self-supervision system

The different layers of the self-supervision system displayed in Figure 9 are described in further detail in the following sections:

1. Section 5.2.1
2. Section 5.2.2
3. Section 5.2.3
4. Section 5.2.4
5. Section 6.2.1
6. Section 7.7

5.2.1 Software supervision

5.2.1.1 Supervising the applications

The diagnostic program can control applications by detecting status changes (e.g. initialization and stopping at the right instant). The applications report their statuses

(e.g. initialization finished, processing finished or error detected). Using status changes to supervise the applications means that an application that has been started must report back to the diagnostic program within a given time.

A hard-wired watchdog per microprocessor which the programs have to reset at regular intervals supervises the entire SW. Should a watchdog not be reset, the watchdog timer times out and initiates a hardware reset.

5.2.1.2 Supervision of data transfer via the process bus

A number of supervised criteria ensure the integrity of the data transferred via the process bus. All data transferred via the process bus are subject to cyclic redundancy checks as part of the Ethernet transmission.

5.2.1.3 Supervision of the protection functions

The operation of every application is synchronized and a time stamp is attached to all analog signal samples and binary signals. Before determining a differential current, a check is performed to make sure the samples have the same time stamp. Should this not be the case, the samples concerned are not evaluated.

5.2.1.4 Processing and supervising the binary inputs

Every binary input is equipped with its own anti-bounce software. As a rule, the status of a signal is considered valid for processing if it persists 20 ms after its first incidence.

The binary inputs are also supervised with respect to oscillations. If the status of an input changes five times in 100 ms, the input is marked as “invalid”. In this case, the signal is processed such that the reliability of the system is assured, i.e. invalid blocking inputs are assumed to be active.

5.2.1.5 Enabling binary outputs

To achieve the maximum reliability of the system, every tripping command has an associated enabling signal and should the diagnostics program detect an HW or SW error, it suppresses the enabling signals for the binary outputs, i.e. the tripping outputs are inhibited.

5.2.1.6 Error messages in the event list

All errors and defects detected by the self-supervision function are processed by the diagnostics program and recorded as events. These are classified as “major errors” if the proper operation of the protection functions can no longer be guaranteed.

In such cases, the system is automatically restarted. All the output channels are blocked, the protection devices are no longer standing by and the green LEDs on the local control units flash.

Errors that do not endanger the proper operation of the protection functions are classified as “minor errors”.

5.2.1.7 Starting or restarting the system

When the self-supervision function or the diagnostics program restarts the system or a part of it, the procedure is signaled on the local control unit. The blocked status of the system is signaled by the flashing yellow LED on all the units and on the HMI.

While the system is starting, all the LEDs flash and the SW applications are indicated by a designation (e.g. MPL, TIM etc.). The successful start-up of the system can be seen from the fact that the main menu is displayed on all the units and that the signal “41810_In service” is set.

5.2.2 Hardware supervision

5.2.2.1 Supervising the auxiliary supply

The power supply units in the central and bay units are supervised with respect to their permissible variations. An auxiliary supply voltage that is out of tolerance counts as a major error, i.e. the protection system is shut down and restarted.

5.2.2.2 Microprocessor program and main memories

All main memories are tested by writing and then reading a test pattern.

5.2.2.3 Supervision of the tripping relay coils

Each of the tripping relays in a bay unit is fitted with a circuit for supervising the integrity of the tripping relay coil.

5.2.2.4 Parts not covered by the self-supervision function

It is impossible to supervise all parts of the protection chain, e.g. the binary input circuits. It is also advisable to install an external trip circuit supervision system.

5.2.3 Plausibility check

As was described in Section 5.2.2, all analog inputs of all the bay units are supervised. If such supervision detects a discrepancy, it blocks the respective bay unit. This is performed locally and is complemented by a plausibility check carried out by the central unit on the entire system which includes all the zones of the busbar protection (BBP) application. This involves evaluating the current changes taking place in all the bay units. The plausibility check is based on the fact that a change of current (amplitude) caused by a busbar fault must be present in at least two bay units of a busbar zone. (see Figure 10).

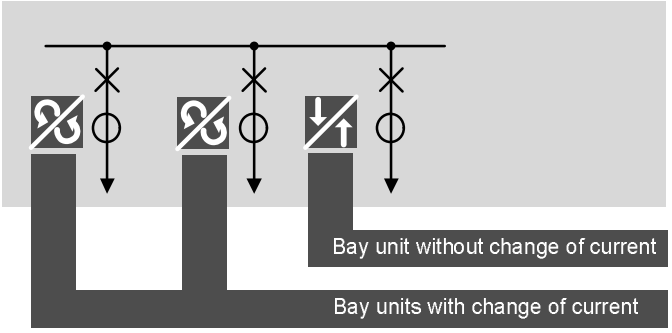

Figure 10 Plausibility check releases BBP-TRIP

The busbar protection is not permitted to trip if this condition is not fulfilled.

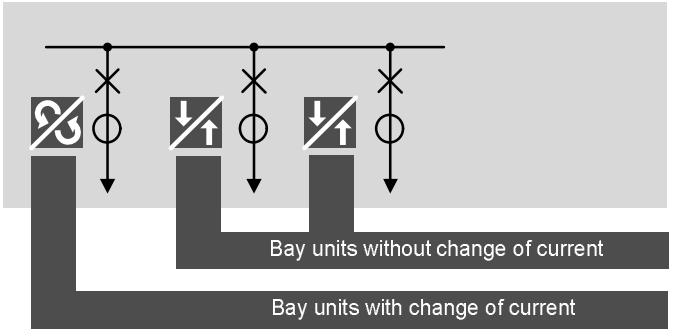

Figure 11 Plausibility check blocks BBP-TRIP

There are situations and operating conditions in which the plausibility check is bypassed, i.e. it bears no influence on the tripping decision by the busbar protection.

Such situations and operating conditions are:

- The protection zone comprises only a single bay unit, or all other bay units of this protection zone are not conducting any current (current below 0.075 x In) (see Figure 12).

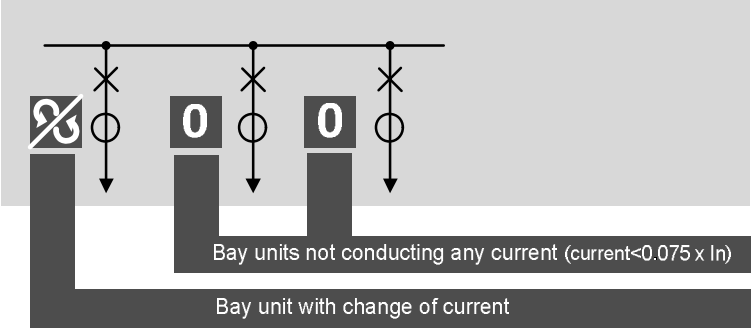

Figure 12 Plausibility check is bypassed (no influence to BBP-TRIP)

- Approx. 400 ms after the number of current measurements assigned to a protection zone has changed (change of breaker/ isolator position or blocking of coupler measurement, see Section 8.2.1.2).
- As long as REB500/REB500sys system is in the ”Test mode”

When testing a system by injecting currents, the plausibility check has no influence to the test providing a busbar protection zone only has a single bay unit connected to it. However, if more than one bay unit is connected to a zone, REB500 should be switched to the “Test mode” for the duration of the test. The plausibility check then cannot falsify the test results.

5.2.4 Internal analogue measurement supervision

The correct operation of the analogue inputs and the analog to digital (A/D) converters is supervised by the internal comparison of ‘$I_{L1}+I_{L2}+I_{L3}= - I_{L0}$’.

Per default the internal analogue measurement supervision is activated. The status of this supervision can be changed while engineering the system, or under the “Configurator mode” of HMI500.

It is recommended not to change the default activation state of the internal analogue measurement supervision.

5.2.4.1 Wiring of the analogue inputs

The external wiring shown in the diagram below is mandatory for the internal analogue measurement supervision.

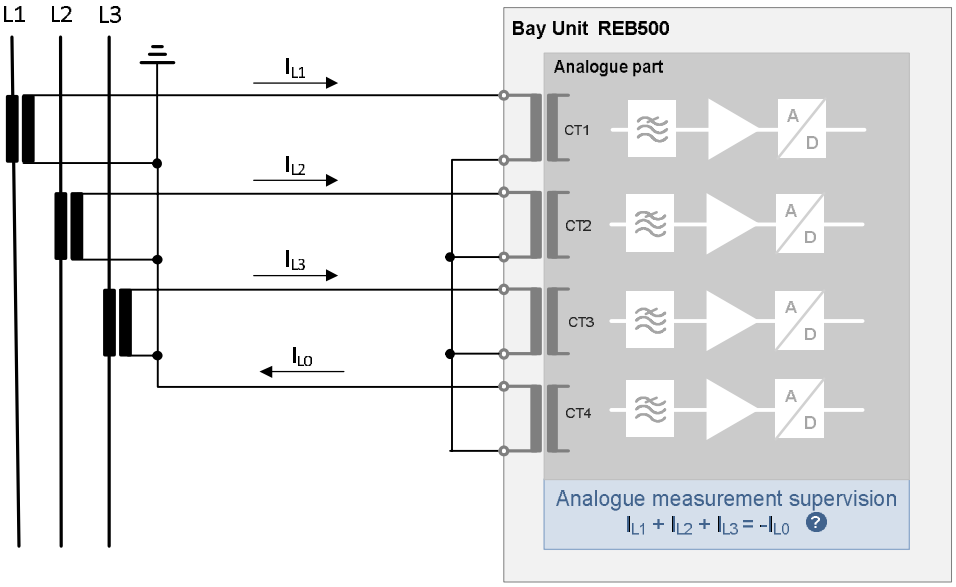

Figure 13 External wiring mandatory for the analogue measurement supervision

Core-balance CT's must not be used for I_{L0}, if the supervision is activated. The main current transformers of L1, L2 and L3 shall have the same current ratio and under the HMI menu "current transformer" the settings for "I1,I2,I3" and "I4" shall be identical.

This is not a CT supervision, because the internal analogue supervision does not check the relation between phases. For details about CT supervision see Section 7.7 "Differential current supervision".

5.2.4.2 Secondary injection tests

If currents are injected for test purposes on a single phase, e.g. during commissioning, the external wiring must include the neutral path (I_{L0}). If not, the analogue measurement supervision will block the protection algorithm.

When testing a system by injecting currents, the internal analogue measurement supervision can be deactivated by switching the REB500 to the "Test mode". The internal analogue measurement supervision then cannot falsify the test results. The wiring of the neutral path (I_{L0}) is not necessary for this mode.

Section 6 System Settings

6.1 Intertripping/transfer tripping

The intertripping system establishes an image of the busbar configuration and performs essentially two tasks:

1. The assignment of analog measurements to the protection zones of the busbar protection function (assignment is refreshed every 6 ms, i.e. fast part, fast signal)
2. Determines the tripping logic according to protection zones for the protection functions
   - busbar protection (the zone containing the fault)
   - end zone protection (zone with the end zone fault)
   - breaker failure protection (zone with the defective circuit-breaker)
   - enabling tripping (external enabling signal, low-voltage check feature)
   - intertripping

As an example consider a fault on busbar 1 of double busbars (see Figure 2).

1. Only those feeders connected to busbar 1 are assigned to the measuring system of busbar 1. The assignment of the feeders is carried out by the intertripping system, which evaluates the positions of the isolators.
2. The measuring system on busbar 1 detects the internal fault and issues a tripping command for busbar 1 to the intertripping system.

   The intertripping system knows from the positions of the isolators, which feeders are connected to busbar 1 and the tripping command to the circuit-breakers of all those feeders with isolators closed onto busbar 1.

It is thus extremely important for the correct isolator positions to be reported to the protection system.

The intertripping system also detects when protection zones are connected together (e.g. both feeder isolators closed).

6.1.1 Busbar image

The busbar image is based on a topological principle, i.e. it only includes topological items that are necessary from the point of view of protection. It starts with a busbar section and checks all its electrical connections and constructs a protection zone bounded by the following items:

- circuit-breaker/CT pairs
- bus-tie breakers
- CT/feeder pairs
- feeder

This procedure is repeated until all the sections of the busbar have been determined.

Topological items are:

- busbars
- isolators and longitudinal isolators
- circuit-breakers
- CTs
- bus-tie breaker CTs
- bus-tie breakers
- feeders
- connections

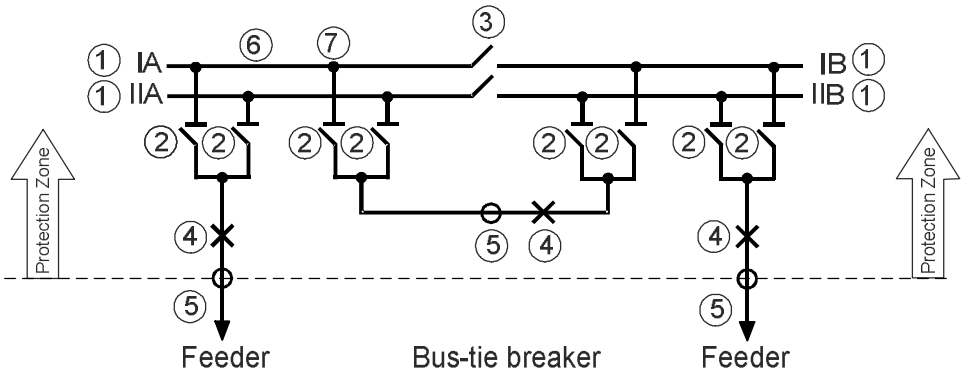

1 Busbar (protection) zones
2 Isolator
3 Longitudinal isolators
4 Circuit-breakers
5 C.t's
6 Busbar
7 Connection point

Figure 14 Example of double busbars with longitudinal isolators

The possibilities and advantages of a busbar image, i.e. an intertripping system, based on the topological principle are illustrated for 1½ breaker and duplex schemes in Section 10.

6.2 Isolator and circuit-breaker positions

In addition to correct isolator positions, it is also necessary to know the statuses of the circuit-breakers that have been **configured**. The statuses (positions) of the circuit-breakers can influence the following protection functions:

1. Busbar protection (see Section 7.)
2. End zone protection:

   The end zone protection function is blocked when the circuit-breaker is closed. Should signals be incorrectly wired such that an “open” signal is generated when the circuit-breaker is in fact closed, there is a likelihood of mal-operation in the event of a fault on the power system.

Where CB positions signals are configured as inputs, it is extremely important for the “CB Close” command to be correctly connected (see Section 8.2.4., “CB CLOSE” command (manual close signal)”).

The statuses of the auxiliary contacts on the isolators and circuit-breakers reflect the statuses of the latter (CLOSED or OPEN). Each of these statuses is represented by an independent signal (one for CLOSED and one for OPEN).

The image of the isolators is refreshed every 50 ms and the one for the circuit-breakers every 6 ms.

Where during inspection or maintenance the statuses of isolators or circuit-breakers are simulated either by a maintenance input or external jumpers, the system will respond according to the simulated statuses of isolators and circuit-breakers.

Therefore take care when resorting to such manipulations!

6.2.1 Supervising isolator and circuit-breaker statuses

A supervision algorithm detects the presence of the auxiliary supply. To be correct, it has to be measured at either one or the other, i.e. corresponding to CLOSED **or** OPEN. An alarm is generated, if after a preset delay either both are missing or both present.

The supervision algorithm detects the following faults in the isolator and circuit-breaker return confirmation circuits:

- Failure of the auxiliary supply in the return confirmation circuits (e.g. tripped miniature circuit-breaker)
- Undefined status of the main isolator contacts (e.g. mechanical defect)
- Wiring error
- Undefined status due to incorrect simulation

The supervision system cannot detect exchanged “CLOSED” and “OPEN” signals. This condition may be detected by the differential current supervision function (see Section 7.7).

6.2.2 Auxiliary contacts

A potentially-free N/O and N/C contact must be provided for each isolator and circuit-breaker. The N/O contact signals that the isolator or circuit-breaker is “CLOSED” and the N/C contact that it is “OPEN”.

The switching sequence and wiring are described in the Commissioning Manual.

6.2.3 Evaluating the isolator and circuit-breaker statuses

The isolator and circuit-breaker statuses are evaluated as follows:

Table 2 Evaluating isolator and circuit-breaker statuses

Return confirmation that isolator/CB “CLOSED”	Return confirmation that isolator/CB “OPEN”	Isolator/CB image
inactive	inactive	Last status retained and delayed for the bus image of busbar protection - isolator alarm - switch inhibit signal
inactive	active	OPEN
active	inactive	CLOSED
active	active	CLOSED and delayed - isolator alarm - switch inhibit signal
An active “CB CLOSE” signal (“CB CLOSE” command) forces the circuit-breakers into the “CLOSED” position.		

6.2.4 Isolator alarm

If the isolator and circuit-breaker supervision function detects an error, it is signaled on the local HMI and also via the output signal “Isolator alarm” after the set signal delay.

6.2.5 Delay

Isolators require a certain time to operate and while they are in motion, the relationship between the status signals and therefore the integrity of the isolator image may be briefly disturbed due to the different points at which the auxiliary contacts are actuated. As this is quite normal, an isolator alarm should not be generated and therefore the alarm has to be delayed.

6.2.6 Blocking by the isolator alarm

If considered necessary, the isolator alarm can be arranged (set) to block the protection. There are two alternative settings:

- Block protection
  Operation of the busbar protection and the intertripping system is completely blocked.
- Discriminative blocking (preferred alternative)
  Operation of the busbar protection and the intertripping system is only blocked for the section of busbar (protection zone) concerned.

6.2.7 Switch inhibit

If the isolator alarm was initiated by an isolator or circuit-breaker that at the time determined the assignment of protection zones, the “Switch inhibit” signal is also set.

While the “Switch inhibit” signal is active, it is recommended to avoid operating isolators or circuit-breakers in the station. **On no account is it permitted to operate an isolator or circuit-breaker in the bay from which the alarm originates.** This is because the last isolator status is retained in the bus image of busbar protection, which therefore would no longer correspond to the actual state of the station and would falsify the intertripping system.

A false differential current may result, which if the isolator alarm is not configured to block the protection would cause mal-operation of the protection.

The incorrect control of the intertripping logic means that in the event of a fault the wrong circuit-breakers are tripped.

The “Switch inhibit” signal is not set, however, if the isolator or circuit-breaker concerned does not determine the assignment of protection zones. Figure 15 shows an example for a bus-tie breaker. Isolators Q1, Q2, Q10 and Q20 are open and therefore the bus-tie breaker Q0 is not assigned to a protection zone and of no consequence for the circuit-breaker image.

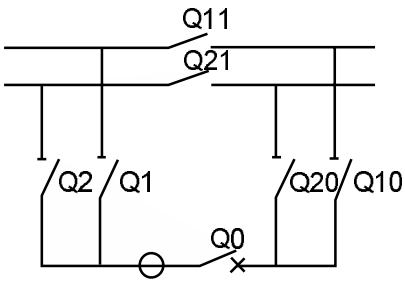

Figure 15 Circuit-breaker image of no consequence if the isolators are open

6.2.8 Acknowledging the isolator alarm

Figure 16 shows the responses of the signals in the event of an isolator alarm and switch inhibit.

The isolator alarm is reset and the blocking of the protection cancelled by applying a signal to the input “Accept bus image alarm”. The signal “Switch inhibit” stays active.

If it is not acknowledged, the signal Isolator alarm is reset and blocking cancelled automatically should the isolators and the circuit-breakers adopt correct statuses.

If the isolator alarm is set due to the **failure of the auxiliary supply** for the return confirmation circuit (e.g. MCB. trip or deliberately switched off for maintenance), **it may be acknowledged**. Providing no switching operations are performed on the feeder, a hazardous situation cannot arise because the last status is retained for busbar protection.

If the isolator alarm is set due to an **undefined status of the main isolator contact** (e.g. a mechanical defect), a **wiring error** or **incorrect simulation**, **station operating guidelines** must specify whether the protection should be blocked (danger of failing to trip) or be reset (danger of mal-operation).

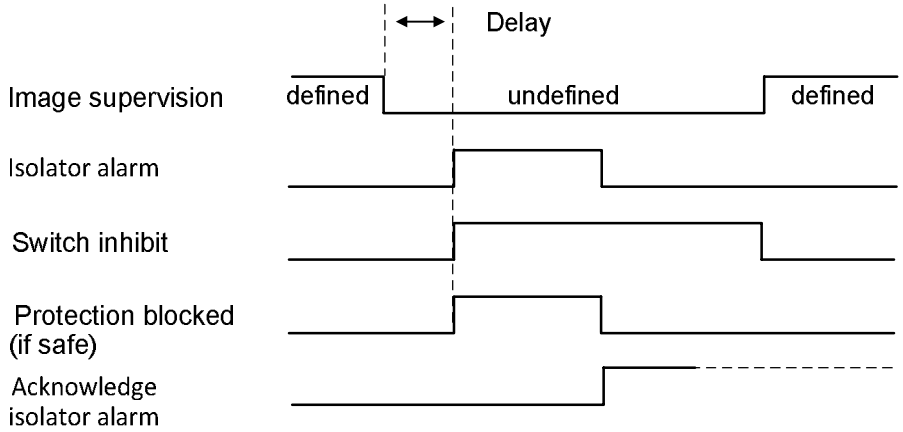

Figure 16 Signal responses for an isolator alarm and switch inhibit

6.2.9 Note on isolators and circuit-breakers

Where the REB500 station image includes an isolator or a circuit-breaker and the isolator or circuit-breaker return confirmations are not configured as binary inputs, the respective switch is considered to be closed. This only applies to active (unmasked) bays.

6.2.10 Response in the event of bay unit failure

The response of the protection functions in the event of a bay unit failing depends on the status of the isolators.

If at the instant of failure all the isolators are open, i.e. the current is not assigned to a measuring unit, an isolator alarm is generated immediately and, depending on the system configuration, the protection zone is blocked (setting: everything blocked or discriminative blocking) or the busbar protection continues to operate (setting: remain in operation).

If, on the other hand, one or several isolators are closed at the instant of the failure, i.e. the current is being measured, the protection zone concerned is immediately blocked and the signals “Isolator alarm” and “Switch inhibit” activated.

6.3 Bay unit stand-alone mode

In the event of a failure of the central unit or an optical fiber cable, a bay unit continues to perform the local breaker failure, end fault and time overcurrent protection and disturbance recorder functions. This, however, is an emergency mode subject to limitations:

- Since there is no communication with the central unit, intertripping is impossible.
- Operation of HMI500 running on a PC connected to the bay unit and the local HMI is limited and they take longer to respond. Events, disturbance recorder records, the binary inputs and outputs and currents and voltages can be viewed.

6.3.1 Emergency 500BUxx operation

The 500BUxx can also start without the central unit in an emergency mode. The settings last used are retained. The local breaker failure, end fault and time overcurrent protection and disturbance recorder functions are fully functional.

Blocking signals previously set by the central unit are maintained, but can be reset using the local HMI.

In the emergency mode, the time is held at its value when a bay unit is switched off. Upon restarting in the emergency mode, the internal time resumes from the value it was held at.

When communication is re-established, a bay unit resumes normal operation without having to be restarted.

6.4 Enabling the tripping command

For special applications, tripping commands can be interlocked by enabling signals.

Section 7 Busbar protection

The busbar protection operates according to the differential protection principle. It detects and trips phase and earth faults in MV, HV and EHV power systems.

The main demands the busbar protection has to fulfill are:

- fast and discriminative isolation of the faulted section of busbar
- high through-fault stability

The busbar protection algorithm is executed by the central unit.

Following pre-processing in the bay units (see Section 4.1), real and imaginary components of the fundamental frequency are transferred to the central unit for further processing every 6 ms.

7.1 Protection zones

The busbar protection performs a separate measurement for each protection zone and each phase. A section of busbar that in the event of an internal fault would be tripped as a single unit (no further subdivision by a circuit-breaker possible) is defined as a protection zone.

The assignment of feeder currents to the individual protection zone measurements is achieved with the aid of a busbar image in the intertripping system (see Section 6.1).

7.2 Measuring principle

The busbar protection (BBP) operates according to the principle of a combined differential current measurement with operation and restraint features and a phase comparison function. In a healthy condition and according to Kirchhoff’s first law, all the currents flowing towards a busbar section must leave it again.

The busbar protection scheme is based on a measurement algorithm, which compares the amplitudes of the feeder currents and derives a restraint criterion. The algorithm is executed independently for each protection zone and phase. In addition to amplitude comparison, their phase relationship is also compared as a second criterion (see Section 7.5 ”Phase comparison”.

The restrained amplitude comparison algorithm detects an internal fault when the settings for IKmin and k are exceeded. A tripping command is only issued, however, if the phase comparison function detects an internal fault at the same time.

The **pick-up setting for the fault current (IKmin)** must be less (80%) than the lowest fault current that can occur on the busbars (IKMS). There is a risk of the protection being too insensitive at higher settings.

If the minimum fault current (IKMS) is high enough, IKmin should be set higher than the maximum load current.

If the CT's saturate at the minimum fault current, the feeder currents have to be reduced by an empirically determined factor CR. The corrected current values form the basis for calculating the setting for IKmin. The reduction factor CR is calculated as follows:

$$C_R = \begin{cases} 0.45 + 0.55 \cdot e^{\frac{-I_K}{0.3 \cdot I_N \cdot n'}} & \text{if} \quad TN \leq 120\,\text{ms} \\ 0.20 + 0.80 \cdot e^{\frac{-I_K}{0.5 \cdot I_N \cdot n'}} & \text{if} \quad 120\,\text{ms} < TN \leq 300\,\text{ms} \end{cases}$$

In both cases the effective overcurrent factor is calculated as:

$$n' = n \cdot \frac{P_N + P_E}{P_B + P_E}$$

Where

IK	the vector sum of feeder fault and load currents for an internal fault
IN	CT rated current
n	rated overcurrent factor
n′	effective overcurrent factor
PB	power consumption of the burden at rated current
PE	CT losses
PN	CT rated power
T_N	power system time constant

7.2.1 Application example

The minimum busbar fault current is 1300 A and is supplied by two feeders. The time constant TN of the power system is 80 ms.

Parameter	Feeder 1	Feeder 2
Contribution to minimum fault current	800 A	500 A
CTs Ratio	200 A / 1 A	400 A / 1 A
Class	5P10	5P20
P_B	6 VA	6 VA
P_E	5 VA	8 VA
P_N	10 VA	20 VA

$$n_1' = 10 \cdot \frac{10\ \text{VA} + 5\ \text{VA}}{6\text{VA} + 5\ \text{VA}} = 13.6$$

$$n_2' = 20 \cdot \frac{20\ \text{VA} + 8\ \text{VA}}{6\ \text{VA} + 8\ \text{VA}} = 40$$

$$C_{R1} = 0.45 + 0.55 \cdot e^{\frac{-800\ \text{A}}{0.3 \cdot 200\ \text{A} \cdot 13.6}} \approx 0.66$$

$$C_{R2} = 0.45 + 0.55 \cdot e^{\frac{-500\ \text{A}}{0.3 \cdot 400\ \text{A} \cdot 40}} \approx 0.95$$

Reduced fault current $I_{KR} = 800\ \text{A} \cdot 0.66 + 500\ \text{A} \cdot 0.95 = 1003\ \text{A}$.

IKmin setting (80% of I_{KR}): 802 A

The factor k is normally set to 0.80. Numerous tests on a network model have shown this setting to be the most favorable.

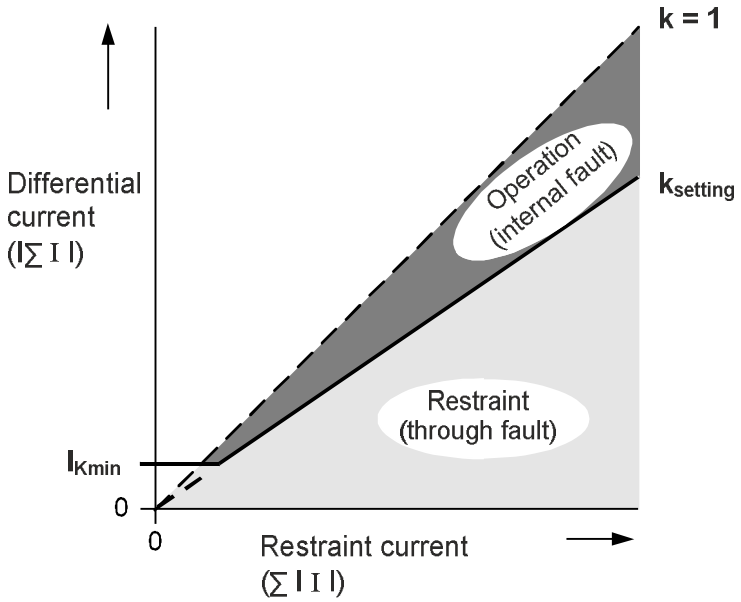

Figure 21 Operating characteristic of restrained amplitude comparison

During a through-fault and normal operation, it is impossible for the **differential (operating) current** to be higher than the **restraint current**.

The neutral current has to be separately monitored in power systems with impedance grounding (optional) (see Section 8.1. “Neutral current measurement”).It is evaluated independently of the two conductor-sensitive protection functions.

The logical interlocking of the protection functions (Figure 17) shows that the protection system can only trip when both protection functions (restrained amplitude **and** phase comparisons) detect a fault on the same busbar section and phase.

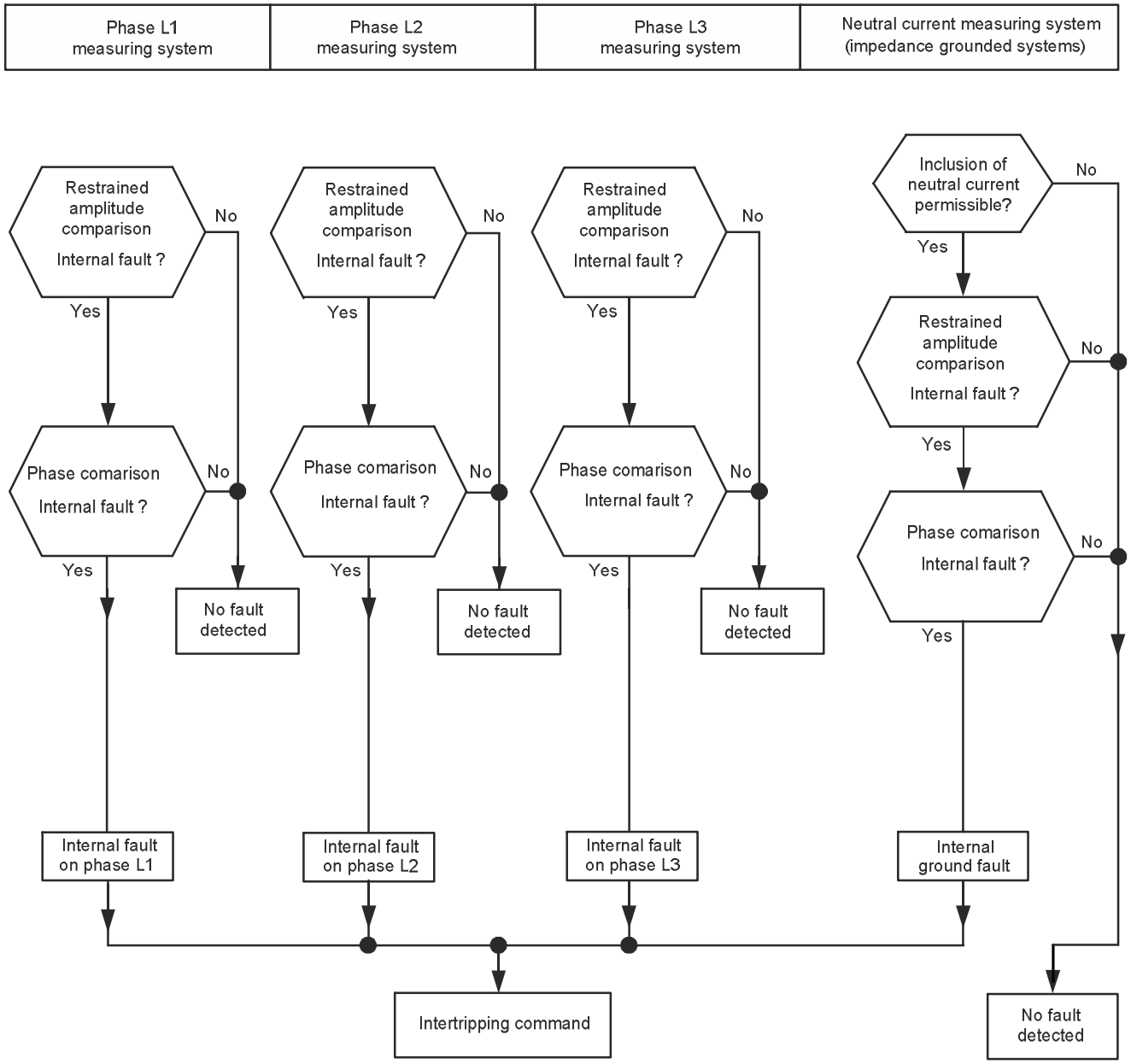

Figure 17 REB500 protection functions

7.2.2 Safety aspects of the measuring principle

High through-fault currents can drive one or more of the CTs into saturation.

The resulting distorted current signals give rise to a false differential current and an incorrect phase relationship between the currents. In extreme cases, an internal fault might be simulated if no precautions were taken.

The preprocessing of the current signals in the bay units enables the protection algorithms to detect faults discriminatively in **all** cases (even in the presence of CT saturation).

The maximum prolongation principle (see Section 4.13) achieves a very good approximation with respect to the real **and** imaginary components (amplitude **and** phase-angle) of the original current signal.

7.3 Restrained amplitude comparison

The restrained amplitude comparison function is basically a differential current measurement I_{diff} with the sum of all the current amplitudes I_{rstnt} acting in a restraining sense.

7.3.1 Amplitude comparison

The differential current I_{diff} is the geometric sum of all the currents flowing towards and away from the busbar. It is calculated from the fundamental components of the currents conducted by the feeders and the bus-tie breakers:

$$I_{diff} = \left| \sum_{n=1}^{N} \left[\mathrm{Re}\left(\underline{I}_{Ln}\right) \right] + j \cdot \sum_{n=1}^{N} \left[\mathrm{Im}\left(\underline{I}_{Ln}\right) \right] \right|$$

7.3.2 Restraint current

The stability factor k is derived from the restraint current I_{rstnt} which is the sum of the currents of the various feeders. The following is an example for the determination of I_{rstnt} for phase $L \in \{L1, L2, L3\}$:

$$I_{rstnt} = \sum_{n=1}^{N} \left| \mathrm{Re}\left(\underline{I}_{Ln}\right) + j \cdot \mathrm{Im}\left(\underline{I}_{Ln}\right) \right|$$

The stability factor k thus becomes:

$$k = \frac{I_{diff}}{I_{rstnt}} = \frac{\left|\sum_{n=1}^{N}\left[\mathrm{Re}\left(\underline{I}_{Ln}\right)\right] + j \cdot \sum_{n=1}^{N}\left[\mathrm{Im}\left(\underline{I}_{Ln}\right)\right]\right|}{\sum_{n=1}^{N}\left|\mathrm{Re}\left(\underline{I}_{Ln}\right) + j \cdot \mathrm{Im}\left(\underline{I}_{Ln}\right)\right|}$$

where

k stability factor per protection zone

$\underline{I}_{Ln}$ fundamental component after the Fourier filter in phase L of feeder n

N total number of feeders and bus-tie breakers per protection zone

The scheme detects an internal fault on the busbar when the stability factor k exceeds the setting (typically 0.80) and the differential current I_{diff} is greater than the setting for the restraint current I_{Kmin}. The differential current in normal operation or during a through-fault is close to zero. By including the restraint current in the denominator the range for the stability factor k becomes $0 \leq k \leq 1$.

Simplified examples for stability factor k:

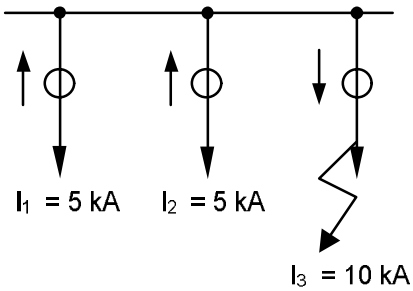

Figure 18 Through-fault

Applying the equation above to Figure 18 yields $k = \frac{|5+5-10|}{|5|+|5|+|0|} = 0$.

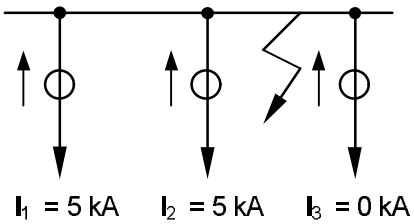

Figure 19 Internal fault

Applying the equation above to Figure 19 yields $k = \frac{|5+5+0|}{|5|+|5|+|0|} = 1$.

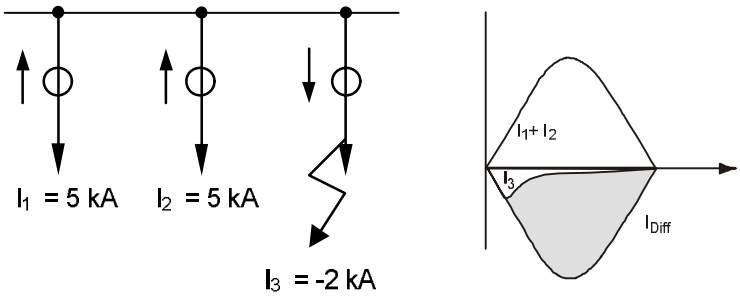

Figure 20 Through-fault with CT saturation

Applying the equation above to Figure 20 yields $k = \frac{|5+5-2|}{|5|+|5|+|-2|} = 0.67$.

7.3.3 Operating characteristic

The following operating characteristic results:

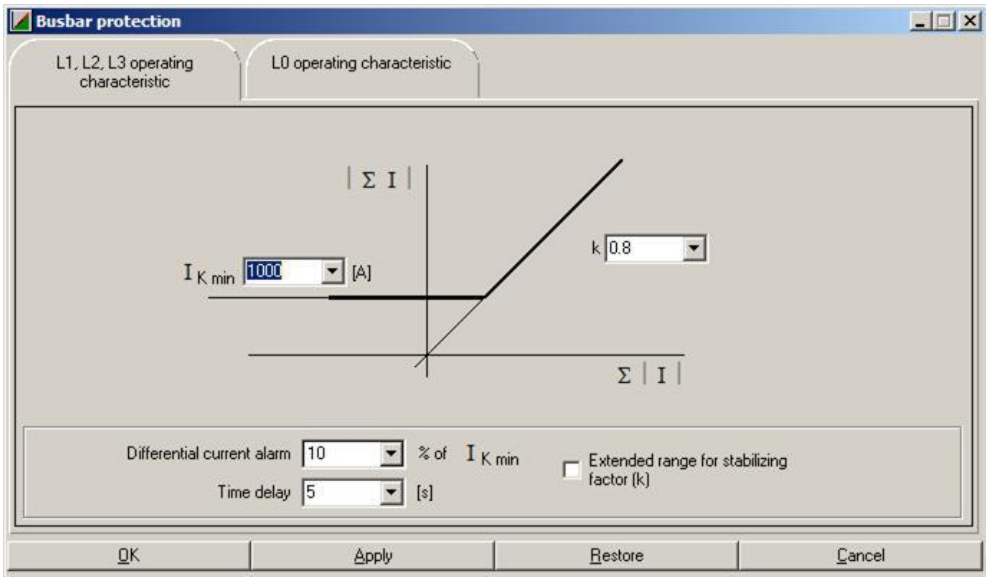

Figure 21 Operating characteristic of the restrained differential current measurement in HMI500

The operating area is above the bold line.

7.4 Restrained amplitude comparison with CT saturation

The restrained amplitude comparison algorithm detects an internal fault when the settings for I_{Kmin} and k are exceeded. A tripping command is only issued, however, if the phase comparison function detects an internal fault at the same time.

The **pick-up setting for the fault current (I_{Kmin})** must be less (80%) than the lowest fault current that can occur on the busbars (I_{KMS}). There is a risk of the protection being too insensitive at higher settings.

If the minimum fault current (I_{KMS}) is high enough, I_{Kmin} should be set higher than the maximum load current.

If the CT's saturate at the minimum fault current, the feeder currents have to be reduced by an empirically determined factor C_R. The corrected current values form the basis for calculating the setting for I_{Kmin}. The reduction factor C_R is calculated as follows:

$$C_R = \begin{cases} 0.45 + 0.55 \cdot e^{\frac{-I_K}{0.3 \cdot I_N \cdot n'}} & \text{if} \quad T_N \leq 120\,\text{ms} \\ 0.20 + 0.80 \cdot e^{\frac{-I_K}{0.5 \cdot I_N \cdot n'}} & \text{if} \quad 120\,\text{ms} < T_N \leq 300\,\text{ms} \end{cases}$$

Where

I_K	the vector sum of feeder fault and load currents for an internal fault
I_N	CT rated current
n	rated overcurrent factor
n'	effective overcurrent factor
P_B	power consumption of the burden at rated current
P_E	CT losses
P_N	CT rated power
T_N	power system time constant

7.4.1 Application example

The minimum busbar fault current is 1300 A and is supplied by two feeders. The time constant T_N of the power system is 80 ms.

Parameter	Feeder 1	Feeder 2
Contribution to minimum fault current	800 A	500 A

CTs Ratio	200 A / 1 A	400 A / 1 A
Class	5P10	5P20
P_B	6 VA	6 VA
P_E	5 VA	8 VA
P_N	10 VA	20 VA

$$n_1' = 10 \cdot \frac{10\ \text{VA} + 5\ \text{VA}}{6\text{VA} + 5\ \text{VA}} = 13.6$$

$$n_2' = 20 \cdot \frac{20\ \text{VA} + 8\ \text{VA}}{6\ \text{VA} + 8\ \text{VA}} = 40$$

$$C_{R1} = 0.45 + 0.55 \cdot e^{\frac{-800\ \text{A}}{0.3 \cdot 200\ \text{A} \cdot 13.6}} \approx 0.66$$

$$C_{R2} = 0.45 + 0.55 \cdot e^{\frac{-500\ \text{A}}{0.3 \cdot 400\ \text{A} \cdot 40}} \approx 0.95$$

Reduced fault current $I_{KR} = 800\ \text{A} \cdot 0.66 + 500\ \text{A} \cdot 0.95 = 1003\ \text{A}$.

I_{Kmin} setting (80% of I_{KR}): 802 A

The factor k is normally set to 0.80. Numerous tests on a network model have shown this setting to be the most favorable.

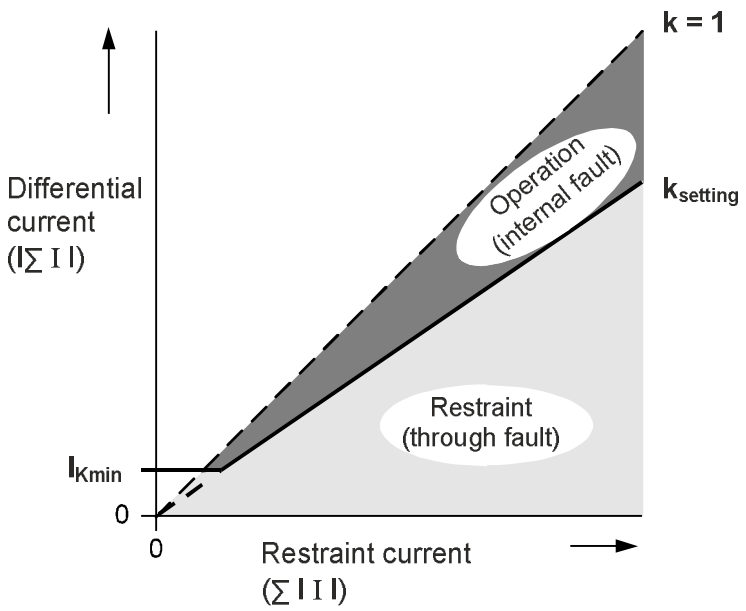

Figure 22 Operating characteristic of restrained amplitude comparison

During a through-fault and normal operation, it is impossible for the **differential (operating) current** to be higher than the **restraint current**.

Other parameters may also influence the setting in extreme cases. These are explained in the following examples.

7.5 Phase comparison

High stability in the presence of severe CT saturation is characteristic of busbar protection schemes that compare the phase-angles of the currents. This still applies when re-energizing a system and adding to the residual flux stored in the CT cores. It is for this reason that phase comparison was chosen as the principle for the second criterion of the busbar protection system.

The function compares the phase-angles of the fundamental components of the feeder currents.

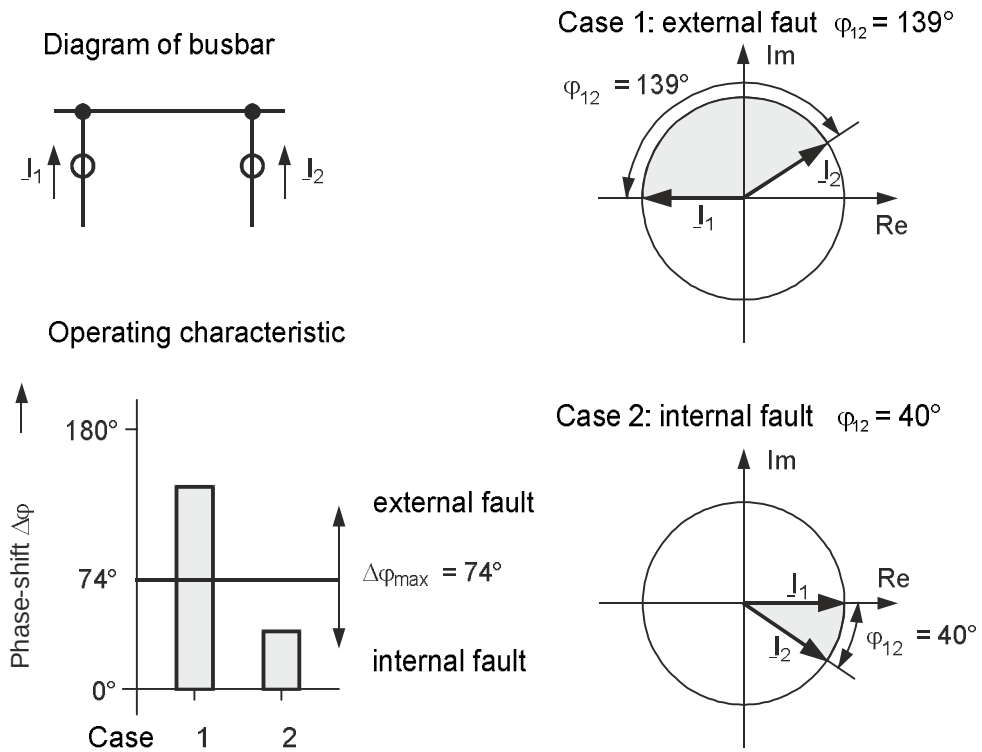

Figure 23 Principle of the phase comparison function

Assuming an internal fault on a section of a busbar, the currents of all the feeders connected to it flow towards the fault and have virtually the same phase-angle. In normal operation or during a through-fault, on the other hand, at least one of the currents is 180° out of phase with the others. The phase comparison function therefore compares the phase-angles of all the currents of each phase individually for each zone of protection. The phase difference for tripping is 0° to 74°, i.e. if the phase-angles of all the feeder currents of a protection zone lie within a band of 74°,

the phase comparison function decides that there is an internal fault. The pick-up angle $\Delta\varphi_{max}$ of 74° is a fixed setting.

For proper operation, it is necessary to exclude feeders conducting very little or no current from the comparison to prevent noise generated by them or balancing currents during a fault from disturbing the measurement. A minimum current is therefore determined when engineering the scheme for a particular application below which a feeder is excluded from the phase comparison. Typical settings are 0.8 I_N for the phase currents and 0.25 I_N for the neutral current.

7.6 Case studies: busbar layouts

7.6.1 Busbar with just two bays

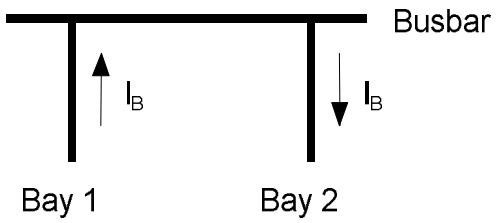

Figure 24 Busbar with two bays

Assuming a fault on the CT secondary of bay 1 or 2 (CT open or short-circuit), false tripping can be prevented by settings that satisfy the inequality $I_{Kmin} > I_B$.

7.6.2 Busbar with several bays

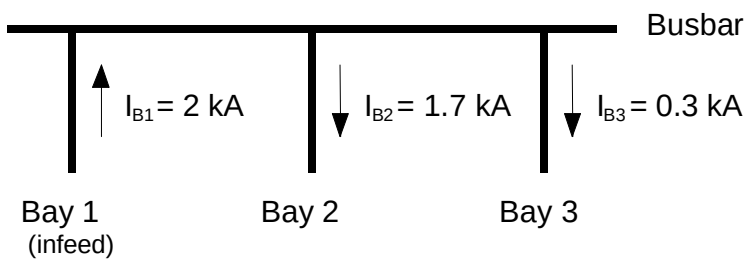

Figure 25 Busbar with three bays

7.6.2.1 Case a: CT circuit fault on Bay 1

The CT circuit fault simulates a fault on the busbars with a current $\Delta I = I_{B2} + I_{B3} = 2$ kA. False tripping can be avoided by setting $I_{Kmin} > 2$ kA, e.g. the next higher setting 2.1 kA.

7.6.2.2 Case b: CT circuit fault on Bay 2

The CT circuit fault in this case simulates a fault on the busbars with a fault current $\Delta I = I_{B2} - I_{B3} = 1.7$ kA and k becomes:

$$k = \frac{\Delta I}{\sum |I|} = \frac{I_{B1} - I_{B3}}{I_{B1} + I_{B3}} = \frac{1.7\ \text{kA}}{2.0\ \text{kA}} \approx 0.74$$

False tripping can thus be avoided by setting $I_{Kmin} > 1.7$ kA and/or $k > 0.74$.

7.6.2.3 Case c: CT circuit fault on Bay 3

This case corresponds to the previous case, but the values for ΔI and k are lower:

$$\Delta I = I_{B1} - I_{B2} = 0.3\ \text{kA}$$

$$k = \frac{\Delta I}{\sum |I|} = \frac{I_{B1} - I_{B2}}{I_{B1} + I_{B2}} = \frac{0.3\ \text{kA}}{3.7\ \text{kA}} \approx 0.081 \rightarrow k \ll 0.7$$

A CT circuit fault under normal load conditions cannot cause false tripping.

7.6.2.4 Influence of the phase comparison function

Tripping can only take place when both functions (restrained amplitude comparison and phase comparison) detect an internal fault. The decision reached by the phase comparison function is therefore of no consequence in the cases illustrated in this section.

7.6.2.5 Summary

Considering case a, the pick-up setting for the fault current in the example given must be $I_{Kmin} > 2$ kA. This is the only setting which will prevent tripping in case a. Both settings, $k = 0.80$ and $I_{Kmin} > 1.7$ kA prevent tripping in case b, and a dangerous setting is impossible in case c.

Assuming a minimum fault current higher than 2.1 kA, the settings for the above example become $k = 0.80$ and $I_{Kmin} > 2.1$ kA. For a minimum fault current

lower than 2.1 kA or even lower than the maximum load current of 2 kA, the setting of I_{Kmin} can result in both a failure of the protection to trip when it should or a false trip:

- With a setting of I_{Kmin} > 2 kA, the protection in the above example would not detect a minimum fault current of 2 kA (excluding a CT fault).
- With a setting of I_{Kmin} < 2 kA, a fault in the CT circuit according to case a would cause a false trip.

The best solution in this situation is to set I_{Kmin} to 80% of the minimum fault current I_{KMS}.

7.6.3 Busbar fault with through current

In certain circumstances, it is possible for currents to flow away from the busbars during a busbar fault. Two examples of this are discussed below.

7.6.3.1 Case a: Through current

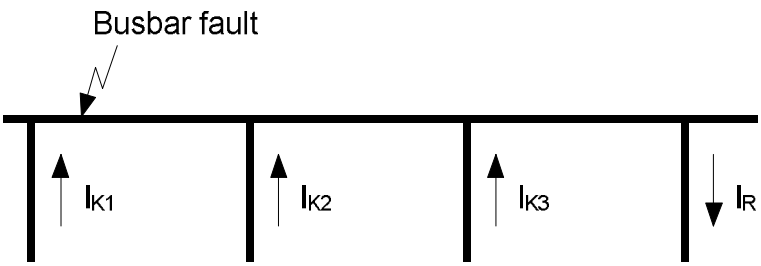

Figure 26 Busbar fault with through current I_R

$$\Delta I = I_{K1} + I_{K2} + I_{K3} - I_R = I_K - I_R$$
$$\sum|I| = I_{K1} + I_{K2} + I_{K3} - I_R = I_K + I_R$$
$$k = \frac{\Delta I}{\sum|I|} = \frac{I_K - I_R}{I_K + I_R}$$

The busbar protection will only trip if the total fault current I_K is n times higher than I_R. See Table 3 for a list of n for different k settings.

Table 3 Through current factor

k	n
0.90	19.0
0.85	12.4
0.80	9.0
0.75	7.0
0.70	5.7

For the **phase comparison function** not to prevent tripping, the low current check for including feeder currents in the phase comparison (see Section 7.5 “Phase comparison”) must be set higher than the through current I_R. This must be determined when engineering the scheme. An alternative is to disable the phase comparison function, which also must be determined when engineering the scheme.

7.6.3.2 Case b: Loop current

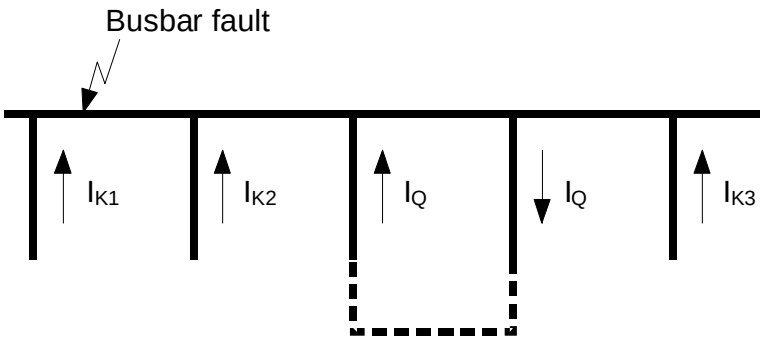

Figure 27 Busbar fault with a loop current

$$\Delta I = I_{K1} + I_{K2} + I_{K3} + I_Q - I_Q = I_K$$

The busbar protection will only trip if the total fault current I_K is n times higher than I_Q. See Table 4 for a list of typical values of n

Table 4 Loop current factor

k	n
0.90	18.0
0.85	11.4
0.80	8.0
0.75	6.0
0.70	4.7

For the **phase comparison function** not to prevent tripping, the low current check for including feeder currents in the phase comparison must be set higher than the loop current I_Q. This must be determined when engineering the scheme. An alternative is to disable the phase comparison function, which also must be determined when engineering the scheme.

7.7 Differential current supervision

Supervising the differential current is an important supervision algorithm which detects the following protection system faults:

- short-circuited CTs
- faulty CTs
- wrong CT ratios
- incorrectly wired CT (wrong current directions and therefore phases)
- wrong isolator and circuit-breaker return confirmation signals

Supervising the differential current therefore augments the supervision of the isolator and circuit-breaker statuses (see Section 6.2.1).

The differential current supervision feature forms part of the busbar protection function and uses the same setting. Its operating value is set to a percentage of the minimum fault current I_{kmin}.

If the differential current exceeds the setting for a time longer than the time setting, differential current alarm appears on the local HMI and the external signal “41815_Diff. current alarm” is generated.

The alarm and any blocking that has taken place are only reset after the differential current has disappeared again.

To ensure that faults can still be detected under low load conditions, the operating value of the differential alarm must be set lower than the lowest possible load current.

Provision is made for the differential current alarm to block the protection (configuration) in the event of differential alarm. There are two alternative settings:

- Selective blocking (preferred)

  Operation of the busbar protection is only blocked for the section of busbar (protection zone) concerned. Intertripping (see Section 6.1) by other protection functions is still possible.

- Block protection completely

  Operation of the entire protection system is blocked.

Section 8 Special applications of BBP

8.1 Neutral current measurement

Measurement of the neutral current is only enabled for impedance grounded power systems and at the user's specific request.

Notes on ground faults in power systems with different types of grounding:

Table 5 Ground fault current for different types of power system grounding

System grounding	Consequences for the protection
Solidly grounded	Fault current I_{Kmin} to I_{kmax} All faults detected by the busbar protection.
Ungrounded	Capacitive fault current Ground faults detected by other protection devices. Detection by the busbar protection impossible.
Impedance grounded	Limited ground fault current Ground faults detected by busbar protection (neutral current measurement)
Petersen coil	Only residual ground fault current Faults generally not detected, because the fault arc is extinguished.

Very often, the resistor (or resistors) limits the ground fault current to a value below the sensitivity of the phase fault measuring units. The relatively high fault impedance also has the effect that during a ground fault currents may also flow away from the busbars. The phase fault units of a directional comparison scheme with current restraint will not trip.

A fourth measuring unit specifically for the neutral current is therefore used to detect ground faults in impedance grounded systems. For the best results, this is connected to a core-balance CT that encompasses all three-phase conductors. Where CTs of this type are not available, the neutral current is derived by vectorially adding the three-phase currents (Holmgreen circuit).

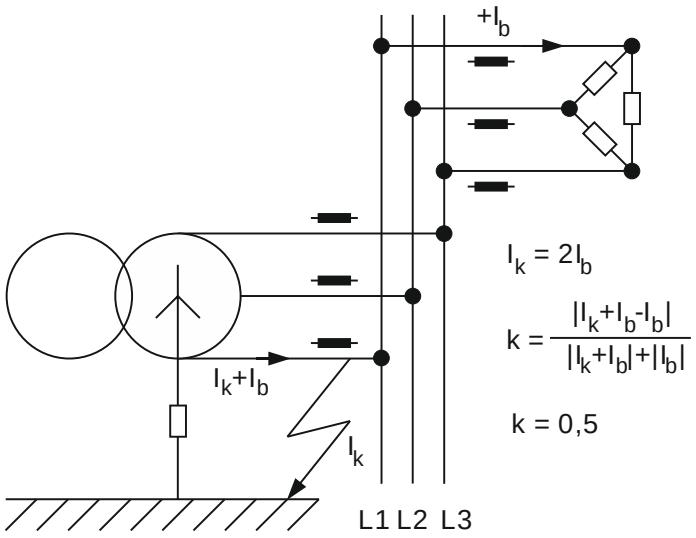

Figure 28 Impedance grounded network

Where this solution is chosen, it is necessary to check the performance of the REB500 neutral current measurement with respect to the main CTs, power system time constant, fault current levels and power transformer inrush current.

The configuration of the busbar protection in impedance grounded networks must take the following physical conditions into account:

- Limited single-phase to ground fault current levels (I_{kmin} 1ph and k-factor values are possibly lower than the operating range of the phase measurement system).

- For a single-phase fault on the busbar, current can also flow away from the busbar because of the relatively high fault impedance (I_b). As a consequence, the phase comparison system may not be able to trip (since the phase-angle between I_b and $|I_k + I_b|$ exceeds 74°).

At a fault current I_k corresponding to twice the load current I_b, flowing in the affected phase L1, the restraining factor k is only 0.5. Thus the restrained amplitude comparison function cannot detect the internal fault at the usual k setting of 0.80. Furthermore, the current is flowing away from the busbar so the phase comparison measures a phase-angle of approximately 180° thus preventing the trip command. Therefore the neutral current I0 has to be measured as well and evaluated together with the restrained amplitude comparison and the phase comparison functions.

The neutral current evaluation is only necessary by phase-to-ground faults and should only be used for these faults. The monitoring of the conductor currents serves as the measuring criteria. Whether it is included in the evaluation or not depends on the levels of the phase currents. Even if the phase currents do not drive the CTs into saturation, their ratio errors can still produce an apparent neutral current on the secondary side. The neutral current is therefore only evaluated when

none of the phase currents exceeds a set value (typically 5 IN). This prevents the neutral current from being evaluated for phase-to-phase and three-phase faults.

Finally, the harmonic level is monitored to ensure that the neutral current is only evaluated providing the measurement is uninfluenced by CT saturation. This feature also prevents the evaluation of the neutral current during transformer inrush currents.

To ensure that the neutral current supervision function blocks reliably in the event of CT saturation, the inductive component of the burden must be a minimum. Therefore the CT secondary circuit must not include electromechanical relays or similar devices.

Detailed site data are essential to accurately engineer and set the neutral current measuring systems.

For each busbar section

I_{KS3max} max. phase fault current for a three-phase fault

T_{S3max} time constant of the DC component of lS3max

I_{KS3min} min. phase fault current for a three-phase fault

T_{S3min} time constant of the DC component of IKS3min

I_{KS1max} max. fault current for a phase-to-ground fault

T_{S1max} time constant of the DC component of IKS1max

I_{KS1min} min. fault current for a phase-to-ground fault

T_{S1min} time constant of the DC component of IKS1min

For each feeder

I_{KA1max} max. fault current for a phase-to-ground fault

T_{A1max} time constant of the DC component of IKA1max

I_{BAmax} max. load current

I_{Nprim} rated CT primary current

I_{Nsec} rated CT secondary current

P_N rated CT power in VA

n rated CT overcurrent factor

n’ effective CT overcurrent factor

U_K CT knee-point voltage

P_E CT losses

R_{CT}	resistance of the CT secondary winding
l	single length (not loop) of the CT leads in Ohm
A	gauge of CT leads in mm2
P_{BG}	total burdens of all connected devices in VA
R_{BG}	total resistive burdens of all connected devices in Ohm

The following points must be checked:

- through-fault stability of the I0 measuring system
- lowest permissible current (operating current) for the differential current measurement
- CT knee-point voltage in relation to the required operating range of the I0 measuring system (it must not saturate in the operating range).

Instructions for calculation and the requirements to be fulfilled by the CTs are given in detail in the application description “Ground fault protection for high voltage busbars” (1KHL020319-Aen).

8.2 Blocking measurement of certain CTs

The operation of the **busbar protection** is explained for **simple station configuration** in this section. Its application to complex stations is described in Section 12.

Blocking the measurement of a CT means that its current is excluded from evaluation by the **busbar protection function** even if it was assigned by the intertripping system.

Blocking is necessary for bus-tie breakers (see Section 8.2.1) and may be necessary for feeders (see Section 8.2.2).

In certain conditions blocking of the measurement is delayed (reclaim time) (see Section 8.2.3).

Blocking is cancelled as soon as the cause for it has disappeared and the protection system receives an active “CB CLOSE” signal (see Section 8.2.4).

Blocking the measurement of certain CTs is a basic function of the busbar protection, which, with the exception of the circuit-breaker reclaim time and the binary inputs for the circuit-breaker statuses and “CB CLOSE” signals, must be neither configured nor set.

8.2.1 Bus-tie breaker functions

In the case of a **bus-tie breaker with a single set of CTs**, the current measurement is assigned to both protection zones, to one in an inverted sense.

Blocking this measurement applies to both zones.

Two bay units are necessary in the case of a **bus-tie breaker with two sets of CTs**. The current measurements are assigned to the protection zones such that they overlap. A fault between the sets of CTs thus trips both zones. The inversion of one of the current signals is achieved by wiring it appropriately to the REB500 analog input.

Blocking this measurement applies to both zones.

The busbar protection excludes the bus-tie breaker CT from evaluation under the following conditions.

- When the bus-tie breaker is open (see Section 8.2.1.1).
- When a station protection function (BBP, BFP or EFP) issues an internal inter-tripping command to the respective breaker (see Section 8.2.1.2).
- When the CTs are bridged (see Section 8.2.1.3).

8.2.1.1 When the bus-tie breaker is open

The bus-tie breaker measurement is blocked when the breaker is open in order to trip the busbar section effectively concerned for a fault between a single set of CTs and the bus-tie breaker.

The CTs are not assigned to a protection zone when the bus-tie breaker is open and therefore the protection zones extend to the bus-tie breaker itself. The correct zone can thus be tripped for a fault between the CTs and the bus-tie breaker.

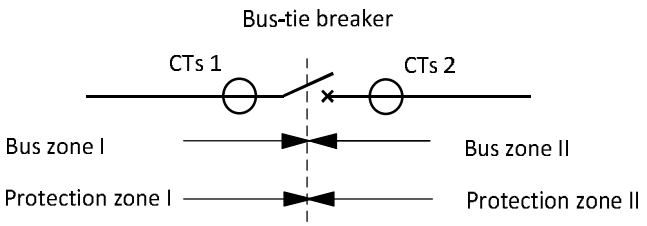

Figure 29 Bus-tie breaker (open) and two sets of CTs

This operation also applies to bus-tie breakers with only a single set of CTs.

8.2.1.2 In the event of a protection function (BBP, BFP or EFP) tripping this CB

When a bus-tie breaker is closed, its measurement is blocked when a protection function BBP, BFP or EFP issues a tripping command.

Bus-tie breaker with a single set of CTs

To trip the section of busbar effectively concerned as quickly as possible for a fault between the closed circuit-breaker and the CTs.

Where a bus-tie breaker is equipped with only one set of CTs, the latter is used for both the neighboring protection zones and is automatically assigned to them when configuring the system.

Faults on bus zone II are tripped immediately and discriminatively in protection zone II. Faults on bus zone I but not between the CTs and the bus-tie breaker are also tripped immediately and discriminatively in protection zone I.

A fault between the CTs and the bus-tie breaker (i.e. on bus zone I but in protection zone II) trips initially protection zone II (including the bus-tie breaker) immediately, i.e. the bus zone not involved in the fault.

A fault between the CTs and a closed bus-tie breaker is tripped after the reclaim time.

Bus-tie breaker with one or two sets of CTs

Detecting a possible breaker failure:

See Figure 31 Bus-tie breaker (closed) and two sets of CTs.

In the case of bus-tie breakers with a set of CTs on both sides, both are assigned to measuring systems. CT 2 is the limit of protection zone I and CT 1 the limit of protection zone II. A bay unit is needed for each set of CTs.

Both sets of CTs do not have to be used and if only one is configured, the scheme is the same as described in the section for bus-tie breakers with a single set of CTs.

The function is the same as for bus-tie breakers with a single set of CTs.

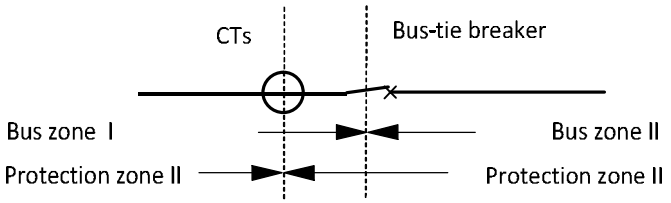

Figure 30 Bus-tie breaker (closed) and one set of CTs

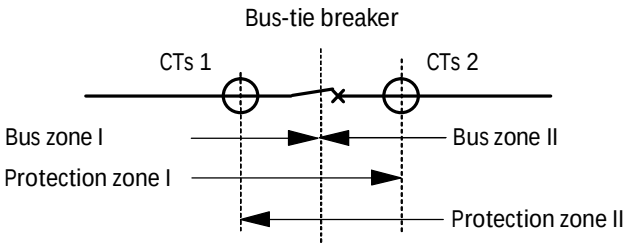

Figure 31 Bus-tie breaker (closed) and two sets of CTs

8.2.1.3 Short-circuiting of a CT

The bus-tie breaker is excluded from the measurement when bus zones are also connected by an isolator, for example:

1. Coupled transversely by parallel isolators
2. Coupled longitudinally by parallel longitudinal isolators

Concerning 1. Coupled transversely by parallel isolators

The current flowing via the coupling between the busbars (Figure 32) is represented in the busbar protection by two current vectors of opposite direct (V+, V-). The vectors are assigned according to measuring system S1 (vector V+) and S2 (vector V-).

When switching a feeder from busbar S1 to S2 (load switching), both isolators Q1 and Q2 are closed for a certain time, i.e. busbars S1 and S2 are directly connected.

- During this time, measuring systems S1 and S2 are connected to form one common measuring system (S1/S2) to match the primary system.
- For the same time the bus-tie breaker measurement is blocked, i.e. the two vectors V+ and V- are excluded.

The reasons for blocking the bus-tie breaker measurement are the following:

While the busbar sections are in parallel (Q1 and Q2 closed), the current (Ik1) of any fault that occurs will divide into a part flowing directly (Ik11) and a part flowing via the bus-tie breaker (Ik12). If included, the bus-tie breaker current (Ik12)

would be represented by the two vectors with opposing directions (V+, V-) and assigned to the common measuring system (S1/S2). The consequence would be that the

1. directional comparison of S1/S2 would prevent any tripping because the opposition of the current vectors (V+, V-) does not point to a fault on the busbars (see Section 7.4).
2. restrained differential current measurement S1/S2 would see a restraint current larger by double the bus-tie breaker current and this would reduce the stabilization factor K to a value lower than setting (see Section 7.2.2).

Blocking the bus-tie breaker measurement excludes the two vectors V+ and V- from the measurement so that they cannot prevent tripping.

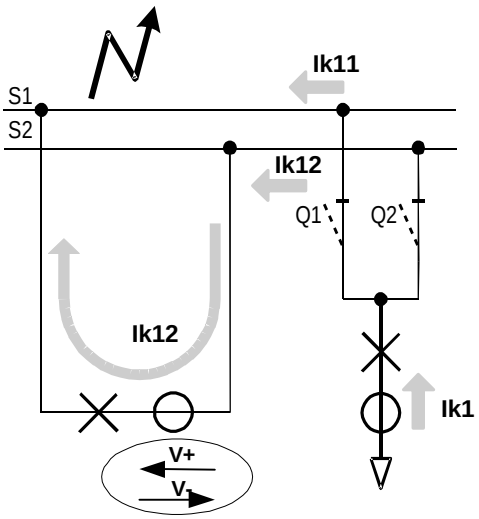

Figure 32 Bus-tie breaker with isolators closed in parallel

Concerning 2. Longitudinal bus-tie breaker with longitudinal isolators closed in parallel

The bus-tie breaker in Figure 33 connects busbar sections longitudinally together.

In order to connect the sections of busbar 3 to left and right of the longitudinal isolators (3A and 3B) together, the longitudinal bus-tie breaker has to be closed first. The longitudinal isolator Q31 can then be closed. The situation is shown in the diagram.

This is analogous to the situation described under 1. above (transverse bus-tie breaker), i.e. measuring systems 3A and 3B are combined to a single measuring system (3A/3B). The problem is thus also the same and the bus-tie breaker measurement must also be blocked.

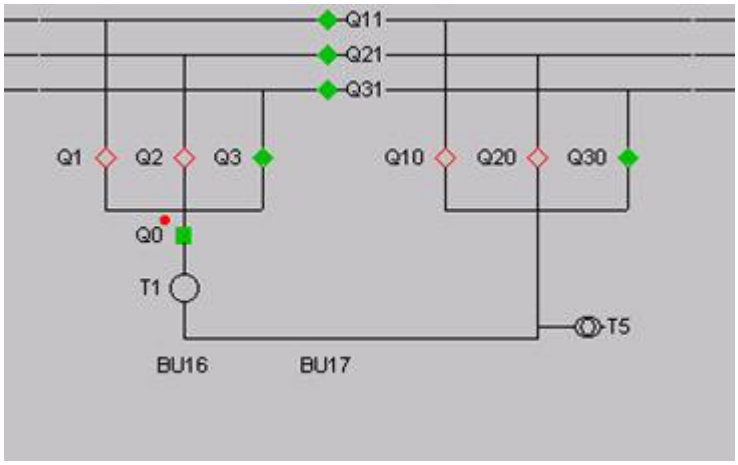

Figure 33 Longitudinal bus-tie breaker

8.2.2 Feeder circuit-breakers

In the case of a feeder circuit-breaker, measurement of the CT for the busbar protection is blocked when

- a feeder has the CT on the line side of the circuit-breaker (see Figure 34); and
- the auxiliary contacts on the circuit-breaker (see Section 6.2.) and the “CB CLOSE” signal (see Section 8.2.4) are configured in the protection system; and
- the circuit-breaker is opened or a protection function (BBP, BFP or EFP) issues an internal intertripping command to the circuit-breaker.

In these circumstances (see Figure 34), the measurement by the bay unit has to be blocked to prevent the busbar protection from tripping for a fault between the circuit-breaker and the CTs when the circuit-breaker is **open**, because the fault is in the protection zone of the end fault protection and not the busbar protection.

Blocking the measurement is unnecessary for a **CT on the busbar side of the circuit-breaker** (see Figure 35), because the fault is outside the busbar protection zone and can only be detected and tripped by the end fault protection.

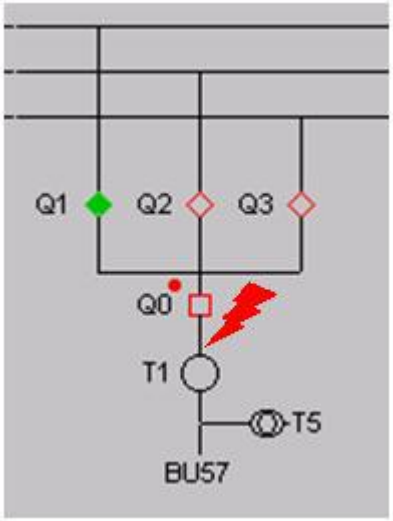

Figure 34 CT on line side of circuit-breaker

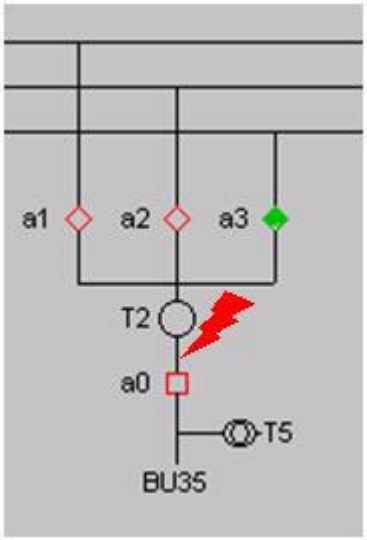

Figure 35 CT on busbar side of circuit-breaker

In systems that do not include an end fault protection function the statuses of feeder circuit-breakers are not usually configured and they are considered to be permanently closed. **No blocking is then configured.**

8.2.3 Breaker reclaim time

Blocking of the (feeder or bus-tie) measurement is delayed (reclaim time) if the following conditions are fulfilled:

1. The circuit-breaker is opened (see Section 8.2.1.1).
2. One of the protection functions (BBP, BFP or EFP) issues an internal intertripping command to the respective circuit-breaker (see Section 8.2.1.2).

In both cases, the arc extinction and any re-ignition phenomena after opening the circuit-breaker are taken into account.

It has to be assured that the CT does not conduct any current after the **reclaim time**. If the **delay is too short**, **false tripping** of a healthy section of busbar may result.

The reclaim time has to be set in accordance with the setting instruction under the Technical Manual.

8.2.3.1 Example of when the reclaim time is set too short

Figure 36 illustrates the case of a bus-tie breaker reclaim time setting, which is too short. **The circuit-breaker reports that it is already "open" but the current is still flowing.** The response of the busbar protection is the following:

The measuring system for bus zone I can no longer measure the current flowing away from the busbar through CT 2 because the measurement is already blocked. A differential current corresponding to the fault current results and **the measuring system for bus zone I trips busbar I!**

The measuring system for the bus zone can no longer measure the current flowing towards the busbar through CT 1 because the measurement is already blocked. The other feeders connected to bus zone II give rise to a differential current (sum of currents flowing towards the busbar) and the measuring system for **bus zone II trips busbar II!**

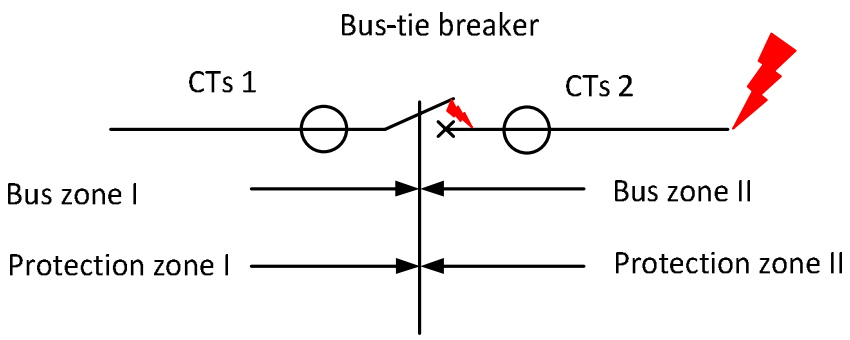

Figure 36 Arc extinction when opening a circuit-breaker

8.2.4 “CB CLOSE” command (manual close signal)

In order to be prepared for closing the breaker onto an existing fault (e.g. closed grounding isolator or forgotten grounding clamp), the measurement has to be reinstated before the feeder or bus-tie breaker is actually closed. This is achieved by activating the busbar protection input signal “11505_Close command CB”.

The **“CLOSE CB” command instantly cancels** any previous **blocking** of measurement regardless of all other criteria.

As soon as the circuit-breaker has reached the closed status (auxiliary contacts report CLOSED), the “CLOSE CB” command can reset.

The **“CLOSE CB” command must be maintained** until the circuit-breaker “CLOSED” auxiliary contact has definitely closed (the auxiliary contacts overlap).

To avoid any risk of mal-operation, the protection must register every signal applied to the circuit-breaker “CLOSE” coil. These include, for example, local close commands, close commands from remote control systems, the station automation system or from auto-reclosure schemes.

The simplest way of doing this is to take the “CLOSE CB” signal directly from the circuit-breaker “CLOSE” coil.

The CLOSE CB signal is acquired and processed every 6 ms (fast part and fast signal).

8.2.4.1 Example of a “CLOSE CB” signal which was not registered

Figure 37 shows the case of closing onto an existing fault (e.g. closed grounding isolator or forgotten grounding clamp) when the “CLOSE CB” command was not registered by the protection.

The arc ignites before the circuit-breaker can report that it is closed:

The measuring system for bus zone I is unable to measure the outgoing fault current towards bus zone II, because the measurement of the bus-tie breaker current is still blocked. A differential current equivalent to the fault current is therefore created and **the measuring system for bus zone I trips busbar I**.

The measuring system for bus zone II is unable to measure the incoming fault current flowing from bus zone I, because the measurement of the bus-tie breaker current is still blocked. Since, however, there are no other feeders connected to bus zone II that could produce a differential current, the **bus zone II measuring system does not trip**.

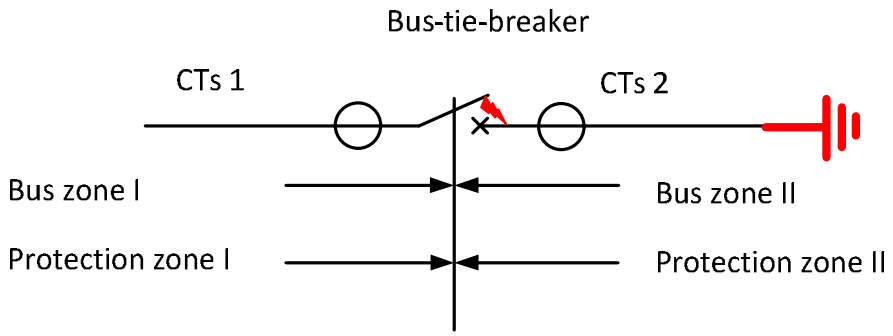

Figure 37 "CB CLOSE" command

8.3 Check zone protection for release of BBP

The selective zone BBP can be extended to form a check zone protection (CzBBP).

This protection function, which is factory configured, is utilized as release for the trip of BBP. Similar to the selective zone BBP the CzBBP is operated as a differential protection.

8.3.1 Protection zones

The check zone comprises all the outgoing feeders of the busbar, whereby the isolator positions are not considered. Fundamentally the measurements of the couplings are not included.

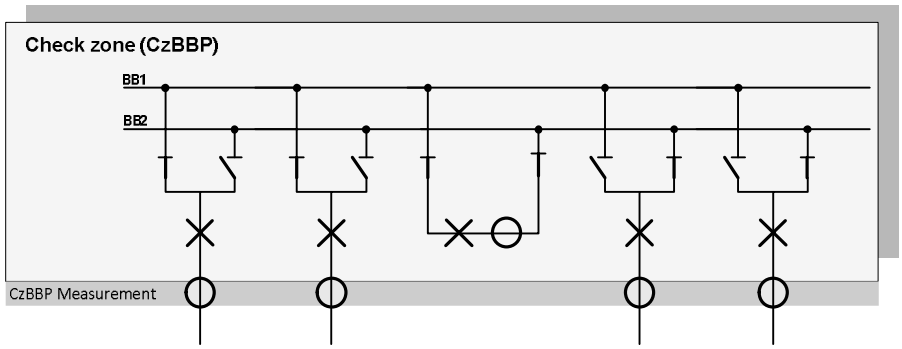

Figure 38 Measurement zone of the check zone protection

8.3.2 Measurement principle

The principle of the check zone protection (CzBBP) is based on a stabilized differential current measurement i.e. on the differential current (I_{Diff}) and the stabilizing factor (k).

$$I_{Diff} = \left| \sum_{n=1}^{m} \underline{I}_{Ln} \right| \text{ of the check zone}$$

$$I_{rstnt} = \sum_{n=1}^{m} \left| \underline{I}_{Ln} \right| \text{ of the check zone}$$

$$k = \frac{I_{Diff}}{I_{rstnt}} = \frac{\left| \sum_{n=1}^{m} \underline{I}_{Ln} \right|}{\sum_{n=1}^{m} \left| \underline{I}_{Ln} \right|} \text{ of the check zone}$$

Before the check zone sends a release signal to the selective zone busbar protection, the configured values of the check zone (CzBBP) values I_{Diff}, and k must be attained.

8.3.2.1 Differential current (I_{Diff})

The setting of the tripping value of the differential current measurement is based on the minimum short circuit current of the busbar and in general is the same setting for CzBBP and BBP.

8.3.2.2 Stabilisation factor (k)

Depending on the busbar configuration and the position of the circuit breakers and the isolators it is possible that one busbar section has a fault, while the other unaffected sections conduct normal operating current. For the CzBBP, which considers the complete plant as one bus, this has the effect that simultaneously the short circuit current as well as the normal operating outflow currents are recorded. The outgoing operating current is further reflected in the calculation of the stabilization factor (k). The setting value of k-factor of the check zone lies below the zone selective busbar protection and can be accordingly calculated as per the following example.

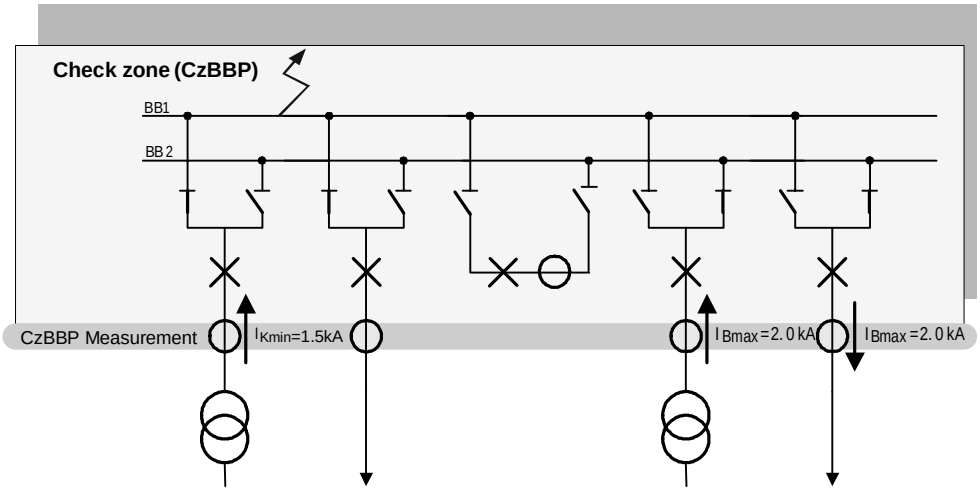

Figure 39 Determination of the stabilizing factors (k)

$$k = \frac{|1.5\ \text{kA} + 2.0\ \text{kA} - 2.0\ \text{kA}|}{|1.5\ \text{kA}| + |2.0\ \text{kA}| + |-2.0\ \text{kA}|} = \frac{1.5\ \text{kA}}{5.5\ \text{kA}} = 0.27$$

In the above example, the stabilization factor setting (k) for the check zone (CzBBP) is k = 0.25 (next setting below the calculated value of k = 0.27). The setting for the selective zone (BBP) has to be calculated according to Section 7.3 and is typically k = 0.8.

8.3.2.3 Operating characteristic

This results in the following operating characteristic for CzBBP: The region above the thick line is the operating zone.

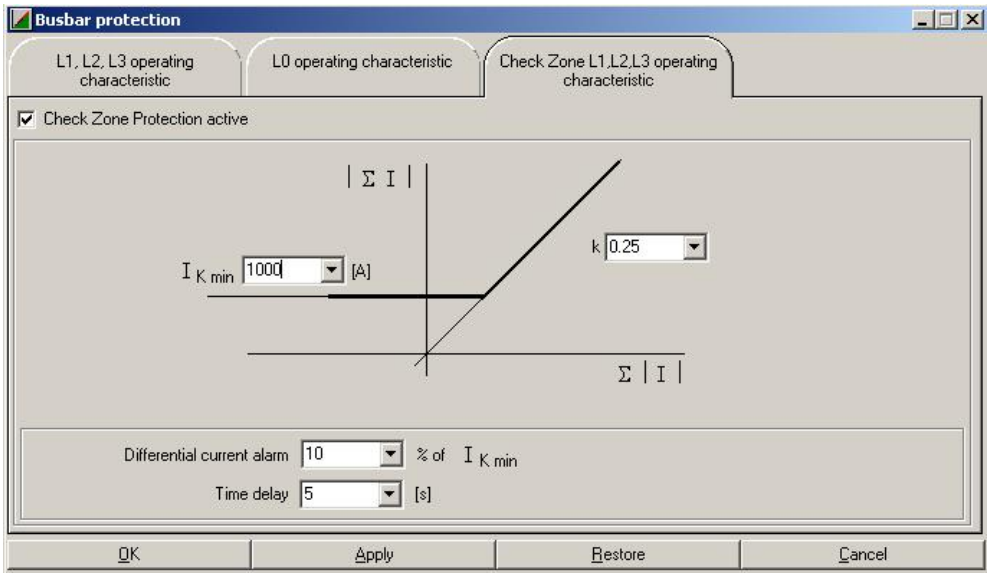

Figure 40 Operating characteristic for the stabilized differential current measurement

8.3.3 Check zone

If the check zone (CzBBP) in a REB500 protection system picks up, zone selective tripping of the busbar protection is permitted in the following cases:

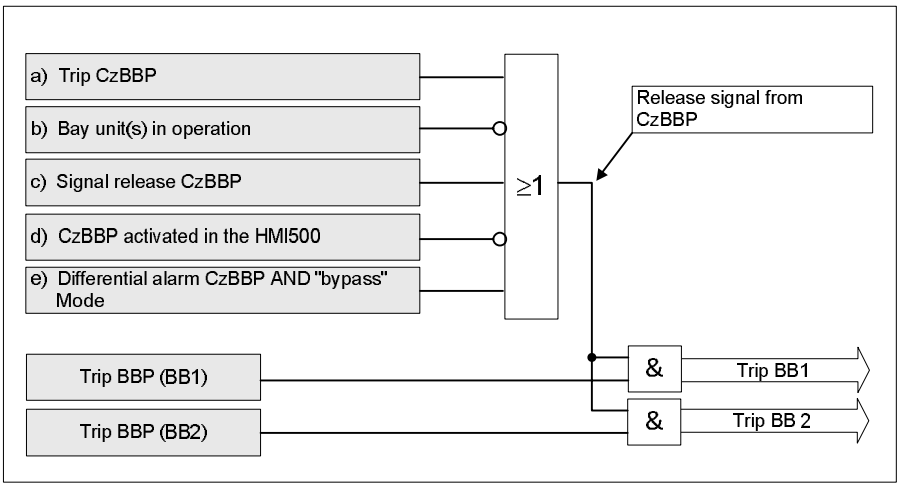

Figure 41 Tripping in check zone enabled

a) Trip by CzBBP enables tripping of the BBP zone.
b) One or more bay units out of operation (i.e. switched off, loss of power, or device error), results in absence of important measurements categories. A complete check zone formation is not possible and thus leads to a release of the zone trip of the BBP (i.e. 'the check zone is bypassed').
c) If the binary input signal from a bay unit “12605_Bypass Check Zone“ or from a central unit “32605_Bypass Check Zone“ has been actuated a release of the BBP zone trip occurs ('the check zone is bypassed'). An application example is provided in Section 8.3.5
d) If in the configuration software HMI500 (i.e. in the configuration database) the check zone protection is set to “not active”, then a permanent release of the BBP zone trip occurs ('the check zone is bypassed').
e) A differential current of the CzBBP leads to a bypass of the release of the BBP zone trip, in case the alarm mode “Check zone bypass” has also been set in the HMI500.

8.3.4 Application of check zone protection

If an incorrect feedback of the isolators / circuit breakers is provided to the selective zone busbar protection (BBP), which is not in accordance to the actual image of the plant, then the results of the busbar measurement and the calculation of the protection criteria do not correspond to the real situation. This adverse situation could lead to an incorrect tripping.

Especially in plants where the activation current of the differential current criteria (I_{diff}) is set below the maximum operating currents of the individual feeders, the effect of incorrect isolator / circuit breaker positions has a very adverse effect.

The use of an overall check zone release criteria (CzBBP) which functions independent of the position of the isolator / circuit breaker eliminates the danger of undesirable trippings.

Instead of a check zone release criteria (CzBBP) as an alternative the under voltage release criteria (U<) can also be utilized (see Technical Manual)

8.3.5 Substation configuration

As is described in the Section 8.3.2, all outgoing feeders of standard single and double busbar systems can be included in a check zone (CzBBP) measurement, but exclude the measurements from the couplers.

For complex busbar configurations e.g. 1½ - Breaker systems and complex multi-busbar systems, which measurements have to be used in the check zone protection will be determined during factory configuration.

For substations with transfer busbars, dependent on the configuration the following section has to be noted.

Substations with a transfer busbar, depending on the configuration, have to be treated separately. If switching on a transfer busbar isolator results in bypassing the CT of an outgoing feeder such that the feeder is connected directly to the busbar (i.e. without measurement no valid check zone measurement (CzBBP) can be performed. In this case the binary input signal “12605_Bypass Check Zone” has to be configured for each bay unit associated with such an outgoing bypass feeder. The presence of the above signal results in an instantaneous unblocking (see Section 8.3.3), which should be equated to a bypass of the check zone system. This binary input should be connected to closing the contact of the customary selector switch “Feeder in bypass operation”.

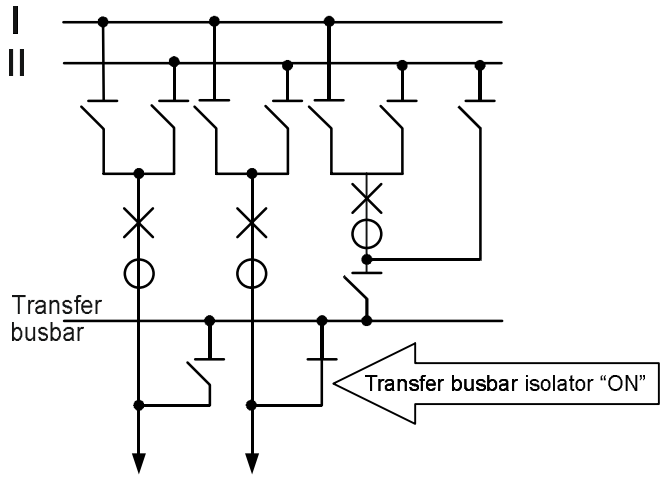

Figure 42 Double busbar with bypass

8.3.6 Maintenance conditions in connection with CzBBP

As described under the Technical Manual a signal can be applied to the binary inputs “Inspection” and “Maintenance” which prevents the test injection current from being included in the differential current measurement of the busbar protection (BBP). This function relies on the position of the isolator concerned being set to 'OFF' in the busbar image in the REB500.

The check zone protection (CzBBP) does not take any isolator position into consideration. This means that the test current of an outgoing feeder bay unit in the modification or maintenance mode is included in the check zone calculation. Depending on the level of the test current, the check zone (CzBBP) may pick up, however the busbar protection (BBP) is uninfluenced by the differential current and prevents the pickup of the check zone from having any effect.

If it is desired that the check zone protection be bypassed (enabled) in the modification or maintenance mode, the signal ‘12605_Bypass Check Zone’ must be activated in addition to the input ‘11620_Inspection_1-On’ or ‘11660_Maintenance-On’.

Section 9 Breaker failure protection (BFP)

9.1 Current setting

If the pick-up current of the breaker backup function is set too low there is a risk that BFP will not reset quickly enough after a circuit-breaker has been successfully tripped. This can be the result of decaying oscillations in the CT secondary circuit.

Conversely BFP may fail to operate if the setting is too high. This situation could arise, for example, due to severe CT saturation when the secondary current falls below the setting and BFP does not start. Recommendations now follow which enable the pick-up current of BFP to be correctly set in relation to the CT data (n') and the set time.

These setting recommendations apply for the phase measurement system of BFP only. If the supplemental neutral measurement system of BFP is activated, the information in Section 9.4 has to be considered in addition.

Basically, the current setting (I_E) should be less than the minimum fault current I_{Kmin} of the corresponding feeder (approx. 80%, i.e. 0.8). Just to satisfy this condition, the setting would be:

$$I_E = 0.8 \cdot I_{Kmin}$$

This setting may be too high for conventional iron core CTs because the measurement may not function correctly even at low fault currents due to transient components in the fault current. A failure of the breaker to operate will always be detected, but tripping could be delayed.

9.1.1 Iron core transformers (Class TPX) and transformers with residual flux “air gap” (Class TPY)

It is necessary to know the transient overcurrent factor (n^*) in order to design a scheme for operation with these CTs. This is calculated from the effective overcurrent factor n' as follows:

$$n' = n \cdot \frac{P_N + P_E}{P_B + P_E}$$

$$n^* = \frac{n'}{1 + 2\pi \cdot f \cdot T_N}$$

After obtaining the transient overcurrent factor (n^*), the settings are given by:

$$\frac{I_E}{I_N} \leq \min\left(n^*, \frac{0.8 \cdot I_{Kmin}}{I_N}\right)$$

TPX and TPY transformers differ, with respect to transient characteristics, by a small remanence in the case of the TPY type. With regard to transient over-dimensioning, TPX and TPY hardly differ.

As an example consider the following values:

CT characteristic	Value
Ratio	600/5 A
Rated burden P_N	15 VA
Losses P_E	7 VA
Rated overcurrent factor n	20
Lead burden P_B	10 VA
Bay unit burden	<0.1 VA
Rated frequency f:	50 Hz
Power system time constant T_N	80 ms
Minimum fault current I_{Kmin}	450 A

$$n' = 20 \cdot \frac{15\text{VA} + 7\text{VA}}{10\text{VA} + 7\text{VA}} = 25.88$$

$$n^* = \frac{25.88}{1 + 2\pi \cdot 50\text{Hz} \cdot 0.08\text{s}} = \frac{25.88}{26.13} = 0.99$$

$$\frac{I_E}{I_N} \leq \min\left(0.99, \frac{0.8 \cdot 450\text{A}}{600\text{A}}\right) = \min(0.99, 0.6) = 0.6$$

Hence, in this example we could set e.g. $I_E = 0.5 \cdot I_N$.

9.1.2 Linearized current transformers (TPZ)

Since these CTs are scarcely subject to saturation, the setting is only based on the minimum fault current for the feeder:

$$I_E = 0.8 \cdot I_{Kmin}$$

9.2 Time-grading a single or two-stage BFP

Timer t_1 is started by an overcurrent **and** a signal from the main protection. A second attempt to trip the circuit-breaker is made at the end of the set time t_1 plus the internal processing time t_{a1}. Timer t_2 is also started at the end t_1. Should the circuit-breaker again fail to trip within the set time of t_2 plus the internal processing time t_{a2}, the breakers surrounding the fault are intertripped.

Table 6 Variables for BFP time calculation for 50 and 60Hz

Variable	Description	Value
t_1	Timer t1	Adjustable
t_2	Timer t2	Adjustable
t_m	Operating time of main protection	See main prot. data sheet
t_{CB}	CB operating time incl. arc extinction	See CB data sheet
t_v	Overcurrent function reset time	19 ms
t_{margin}	Safety margin (If an adequate safety margin is not included, the correct operation of BFP cannot be guaranteed.)	>20 ms (ABB recommendation)
t_{a1}	Internal processing time of t1 stage	14 ms
t_{a2}	Internal processing time of t2 stage	22 ms
t_e	Processing time of input signal	10 ms

Configuring a single-stage BFP function can be achieved by setting the timer t2 to zero.

If a breaker failure function is installed, the circuit-breaker can respond in one of three ways.

9.2.1 Case 1: Tripping by main protection successful

Overcurrent function **and** a starting signal from the main protection start the timer t_1. The circuit-breaker successfully interrupts the fault current before the end of this time and the overcurrent function resets. **A backup tripping command is not generated** (BFP t_1)**.**

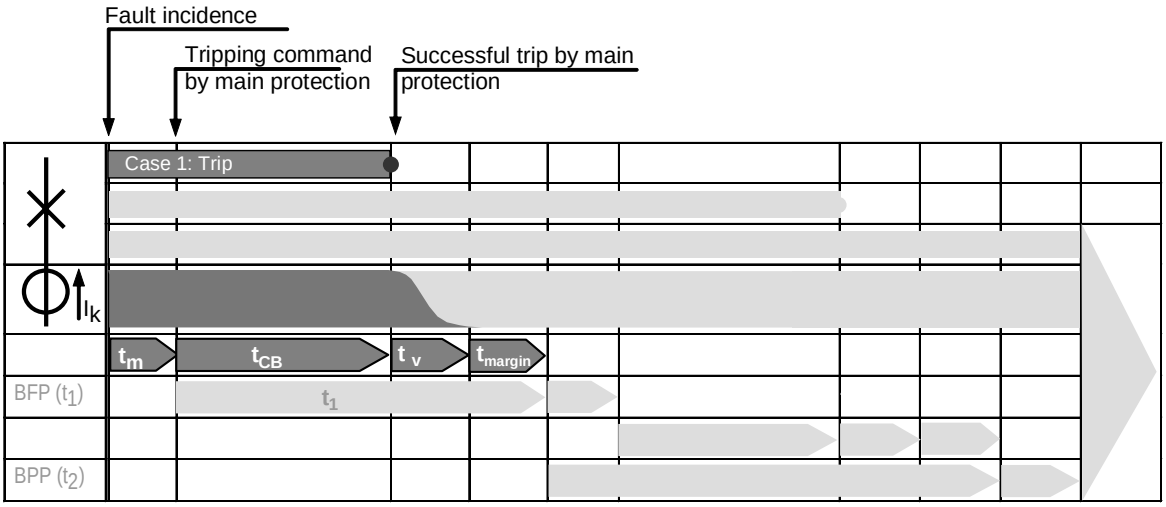

Figure 43 Tripping of the circuit-breaker for case 1

9.2.2 Case 2: Backup trip by BFP

Overcurrent function **and** a starting signal from the main protection start the timer t1. The breaker fails, tripping is unsuccessful and the overcurrent function does not reset. At the end of the timer setting t_1 and the internal processing time t_{a1}, a second attempt is made to trip the same circuit-breaker which trips successfully before the end of the timer setting t_2 and the current function resets. **Intertripping of the surrounding circuit-breakers does not take place** (BFP t_2)**.**

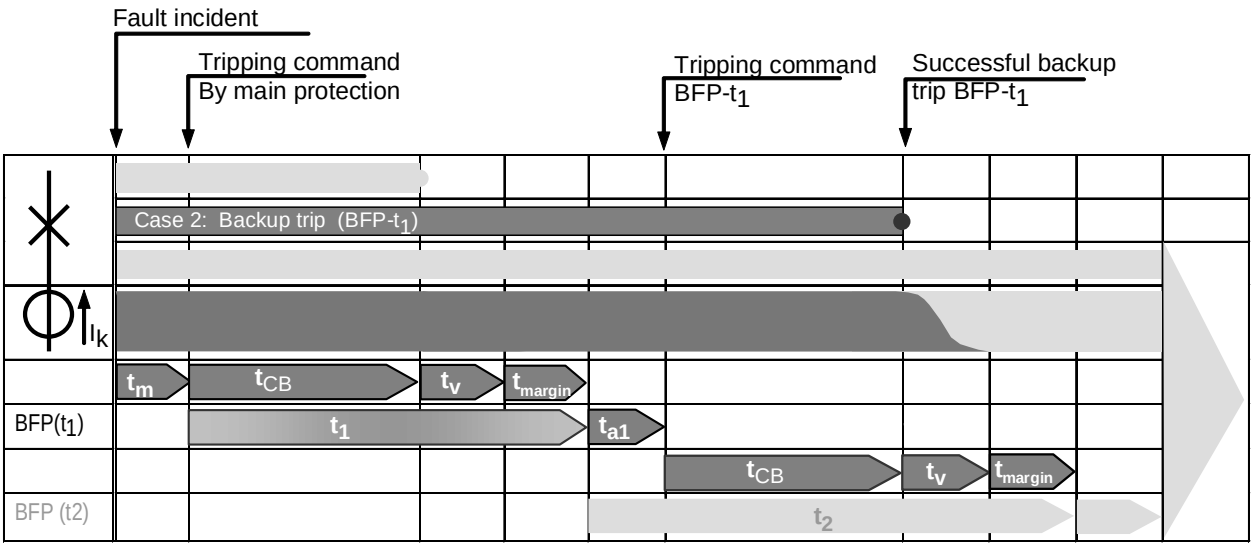

Figure 44 Tripping of the circuit-breaker for case 2

9.2.3 Case 3: Intertripping of surrounding circuit-breakers by BFP

Overcurrent function **and** a starting signal from the main protection start the timer t_1. The breaker fails, tripping and backup tripping are unsuccessful and the overcurrent function does not reset. At the end of the timer settings $t_1 + t_2$ and the internal processing time t_{a2} intertripping of the surrounding circuit-breakers takes place to isolate the fault.

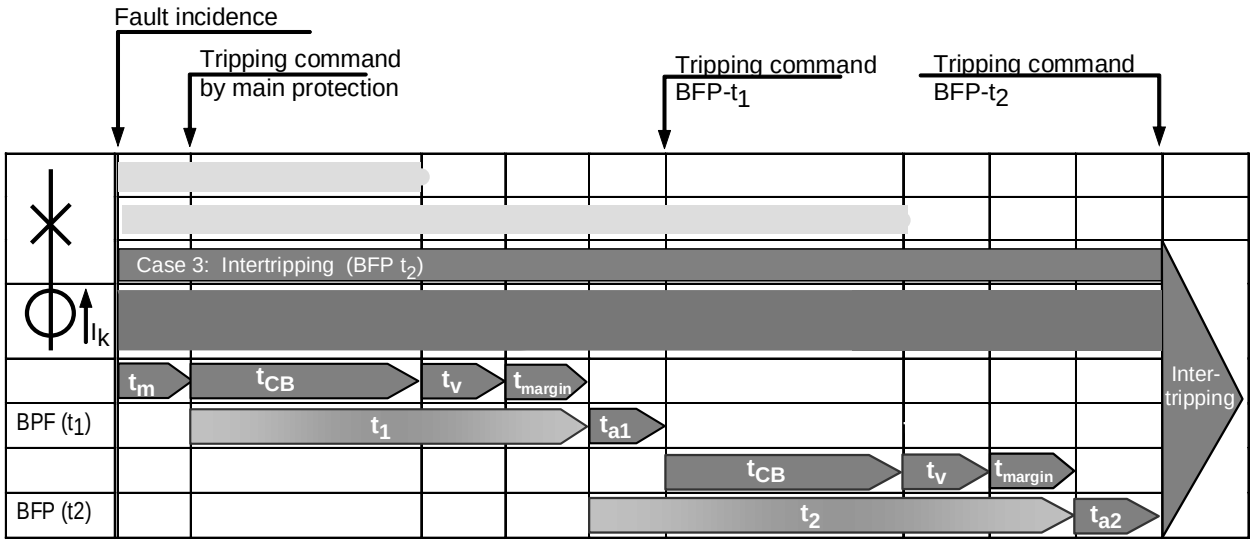

Figure 45 Intertripping of the circuit-breaker for case 3

Remote tripping of the opposite end of the line can be configured to take place at the end of time t_1 or the end of time t_2.
The settings of timers t_1 and t_2 can be determined according to the examples of Cases 1 and 2 above.

9.2.4 Timer t_1 setting

To avoid any risk of a premature tripping command by BFP, the minimum setting of the timer t_1 must be longer than the maximum time required for a successful main protection trip plus the maximum reset time of the overcurrent function.

$$t_1 > t_{CB} + t_v + t_{margin}$$

As an example, the minimum setting for t_1 for a circuit-breaker operating time (t_{CB}) of 40 ms would be

$$t_1 > 40\text{ms} + 19\text{ms} + 20\text{ms} = 79\text{ms}$$

9.2.5 Timer t_2 setting

To avoid any risk of premature intertripping of the surrounding breakers by BFP in the event of a successful backup trip at the end of t_1, the minimum setting of the timer t_2 must be longer than the maximum time required for a backup trip plus the maximum reset time of the overcurrent function.

$$t_2 > t_{CB} + (t_{a1} + t_v) + t_{margin}$$

As an example, the minimum setting for t_1 for a circuit-breaker operating time (t_{CB}) of 40 ms would be:

$$t_2 > 40\text{ms} + 33\text{ms} + 20\text{ms} = 93\text{ms}$$

The correct operation of BFP is assured only if the above guidelines for the minimum settings of the breaker failure timers are strictly observed.

The maximum tripping time can be calculated on the basis of the settings for t_1 and t_2, the recommended safety margin and the internal processing time.

9.2.6 Maximum time t_{1max} for backup tripping

(at the minimum t_1 setting)

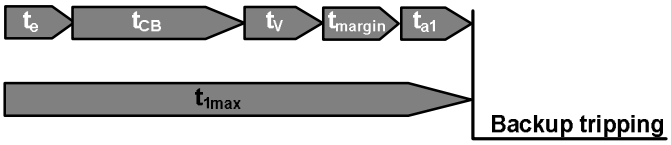

$$t_{1max} = t_{CB} + (t_e + t_{a1}) + t_v + t_{margin}$$

As an example, the maximum backup tripping time for a circuit-breaker operating time (t_{CB}) of 40 ms would be:

$$t_{1max} = 40\text{ms} + 24\text{ms} + 19\text{ms} + 20\text{ms} = 103\text{ms}$$

9.2.7 Maximum time t_{2max} for intertripping

(at minimum t_1 and t_2 settings)

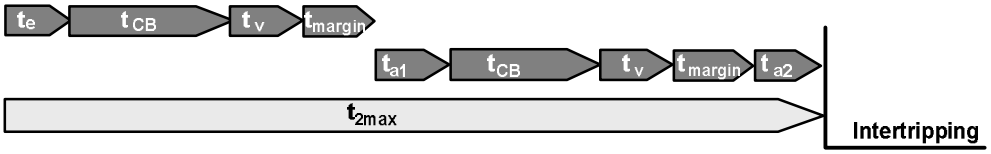

$$t_{2max} = (t_e + t_{a1} + t_{a2}) + 2 * (t_{CB} + t_v + t_{margin})$$

As an example, the maximum intertripping time for a circuit-breaker operating time (t_{CB}) of 40 ms would be:

$$t_{2max} = 46\text{ms} + 2 \cdot (40\text{ms} + 19\text{ms} + 20\text{ms}) = 204\text{ms}$$

9.3 Logic type

The internal BFP can be changed for special applications. The BFP scheme described here is the logic-type 1.

Alternative logics are:

2. Reserved for special applications, no description available.
3. BFP can also be started by the tripping signals from the time-overcurrent and breaker pole discrepancy protections. Otherwise logic type 3 corresponds to type 1.
4. The signals “13760_Start BFP L1L2L3_5” and “13765_Start BFP L1L2L3_6” initiate intertripping after BFP t_1 irrespective of the setting for BFP t_2. Otherwise logic type 4 corresponds to type 1.

9.4 BFP L0 system

In stations with a bypass bus, the behavior with enabled BFP L0 system remains the same as phase system.

The behavior of the trip redirection remains the same.

9.4.1 Current setting BFP L0

The current setting for the BFP L0 system may be well below load currents. If any measured neutral current exceeds the setting while a L0 starting input is active after time t1 has passed, the BFP L0 system will issue a three phase trip.

There are three options to obtain a neutral current 3I0 for the BFP L0 system :

- Usage of a core balance transformer
  This option is the preferred one since it yields the highest sensitivity and is least vulnerable to measurement errors due to CT saturation.
- Holmgreen connection of the phase CTs
  This option has a lower sensitivity since measurement errors from all three CTs are accumulated. Saturation in a one or more CTs may lead to a virtual neutral current that does not correspond to the actual current flow in the primary system.
- Calculation by internal summation of the phase currents
  This option is equal to the Holmgreen connection and leads to similar sensibility and measurement errors. Further errors might be caused by numerical inaccuracies.

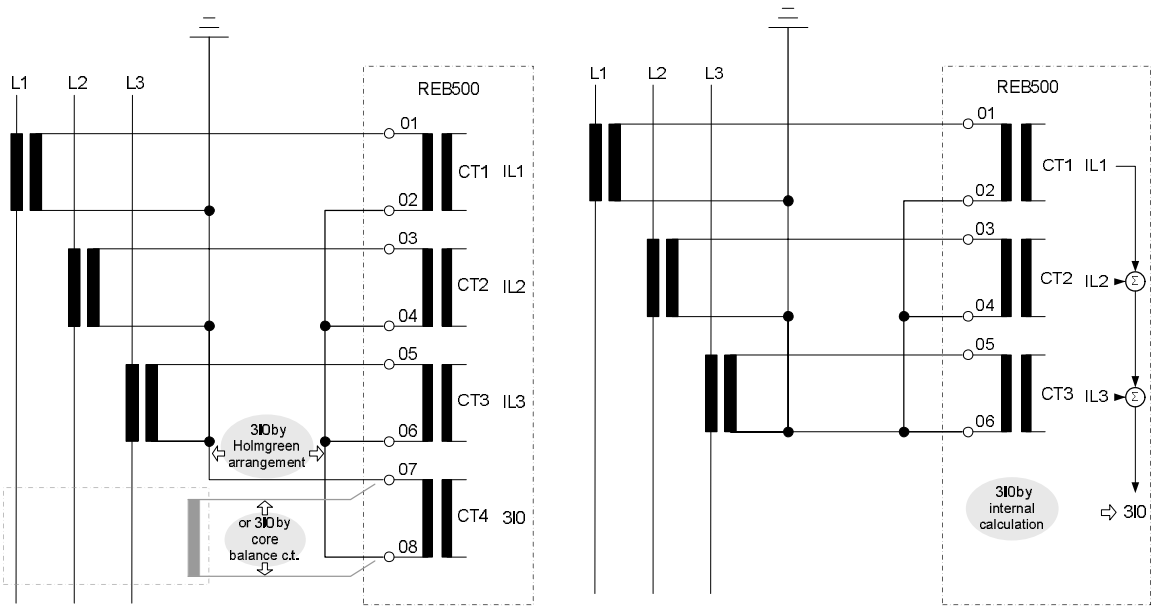

Figure 46 Connection possibilities for derivation of neutral current 3I0

A residual current caused by CT saturation of one or more CTs, an open CT circuit or CT inaccuracies could exceed the pick-up values of the L0 system! In combination with an active starting input for L0, the BFP L0 system will in such cases issue a three phase trip after time t1 has passed. Special attention has to be paid to the stability of the logical start signals from protection functions and devices!

Several physical scenarios beyond the area of influence of the BFP L0 system might lead to an incorrect measurement of the zero sequence current. The major issues are the following:

9.4.1.1 Neutral current I_0 caused by CT saturation

In case one or more CTs saturate, the summation of the three phase currents will not lead to a correct representation of the residual current in the primary system:

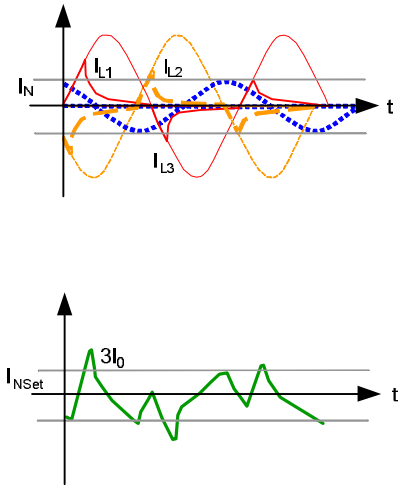

Figure 46 I0 in case of CT saturation

9.4.1.2 Neutral current I0 caused by an open CT circuit

If a connection to the CT is broken or interrupted, the BU is not able to measure the phase current and the summation of the phase currents will lead to an incorrect neutral current. In a symmetrical load situation, the calculated current will equal the missing phase:

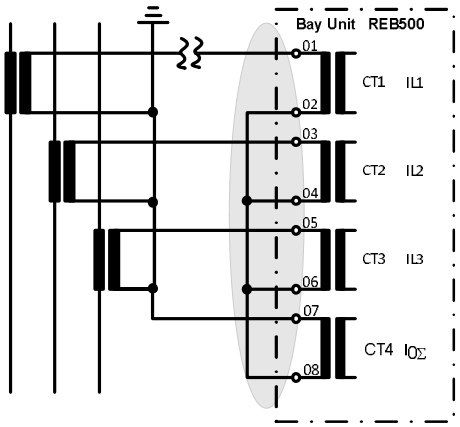

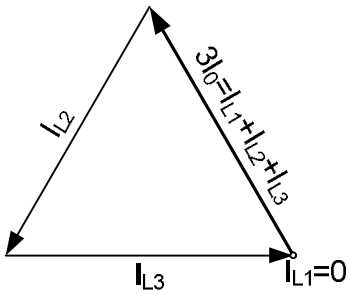

Figure 47 I0 in case of an open CT connection

9.4.1.3 CT inaccuracies

Another aspect to consider while setting the BFP L0 system is the inaccuracy of the individual CTs, which is specified by the CT class. Depending on the amplitude of the currents, this error is seen in the protection system as a neutral current (3I0), which might reach tripping levels.

The setting of the pick-up value of the BFP L0 system shall be above the maximum inaccuracy of the CT.

Per default setting these scenarios are neither detected nor taken into account by the BFP algorithm. Consideration of such situations (calculation and setting) is left to the user.

The signal 23340_BFP TRIP L0 is available as an input to bay protection functions. Further measures to ensure selective tripping can be achieved by logically releasing the trip signal with additional bay protection functions.

9.4.2 Time grading for BFP L0 system

The time grading characteristics for BFP L0 system is identical to the phase system. Different settings for BFP phase and neutral system are possible.

Since the time setting for phase faults and ground faults can be different, the time grading (and setting) has to be done for both the BFP phase and BFP neutral system separately.

Setting the timer t1-L0 below the timer t1 is usually not necessary and not recommended. Deviations from this guideline have to be verified by a detailed setting calculation.

9.5 External start of BFP

The timers of BFP can also be started independently of the overcurrent check and the main protection inputs via an external input.

For safety reasons, a normally-open auxiliary contact on the circuit-breaker should be connected in series with the external control signal applied to this input.

9.6 BFP setting “Active for CB open”

The breaker failure function includes the setting “Active for CB open”. If this setting is enabled, the timers t_1 and t_2 are started independent from the circuit-breaker position (this is the factory configuration).

If “Active for CB open” is disabled, the timers t_1 and t_2 are not started when the circuit-breaker is open, i.e. the breaker failure function is disabled.

The setting “Active for CB open” function is determined by ABB when engineering the system and cannot be changed subsequently. Where breaker failure shall be disabled when circuit-breaker is open this setting has to be defined when system is initially engineered.

Section 10 Additional protection features

10.1 Enabling tripping commands

10.1.1 Example 1: BBP function tripping enabled by external undervoltage relay

10.1.1.1 Problem

In a solidly grounded power system, tripping by the BBP has to be interlocked by an external undervoltage criterion. Every protection zone is correspondingly equipped with a VT and undervoltage function.

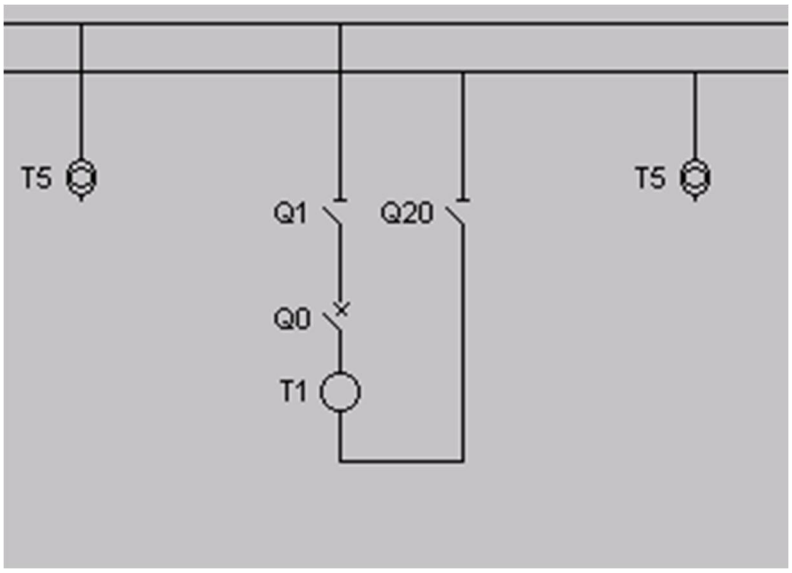

Figure 48 Examples 1, 3 and 5: BBP enable

10.1.1.2 Solution

The enabling signals from the external undervoltage relays are connected to the respective “31805_External release BB zone” input signal.

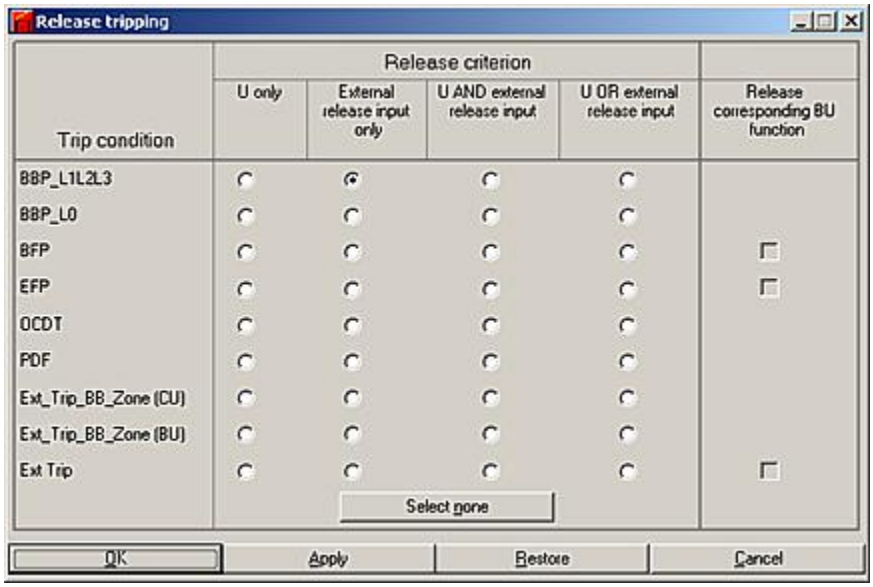

Figure 49 Settings for example 1

10.1.1.3 Result

In the event of a fault on a given busbar section (e.g. BB1), the busbar protection function for BB1 trips, but the tripping signal has to wait for the enabling signal for BB1. A fault on a busbar section will normally cause a voltage collapse, which is detected by the external undervoltage relay for BB1. The undervoltage relay thus also trips and transmits its enabling signal to REB500. REB500 then trips all the feeders connected to busbar section 1.

10.1.2 Example 2: EFP function tripping enabled by the internal undervoltage function

10.1.2.1 Problem

In a solidly grounded power system, transfer tripping by the EFP has to be interlocked by the internal undervoltage function.

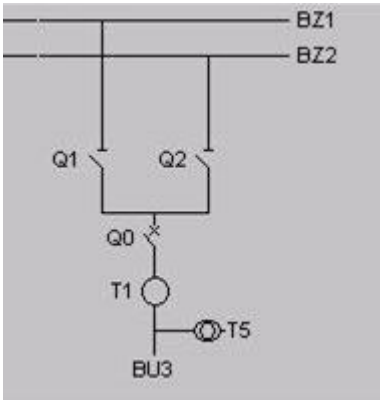

Figure 50 Example 2: EFP enable

10.1.2.2 Solution

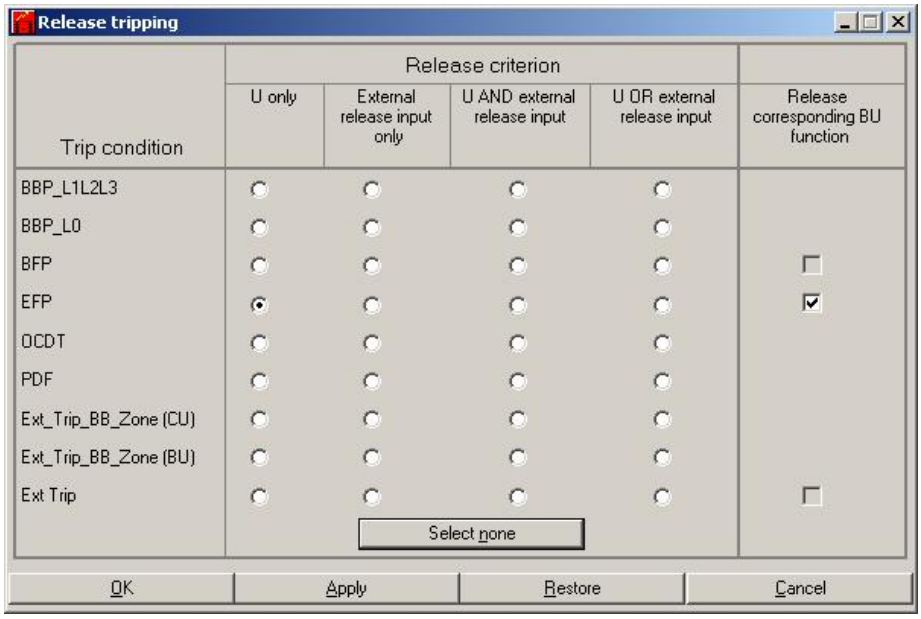

Figure 51 Settings for example 2

10.1.2.3 Result

A fault between the open circuit-breaker and the CTs (end fault) generally causes a voltage collapse which is detected by the internal undervoltage function. The undervoltage function thus also trips and transmits its enabling signal to the EFP function in the same bay unit, which sends a transfer tripping command to the protection at the remote end of the line.

10.1.3 Example 3: BBP tripping enabled by the internal undervoltage function

10.1.3.1 Problem

In a solidly grounded power system, tripping by the BBP has to be interlocked by the internal undervoltage criterion. Every protection zone is correspondingly equipped with a VT and undervoltage function.

10.1.3.2 Solution

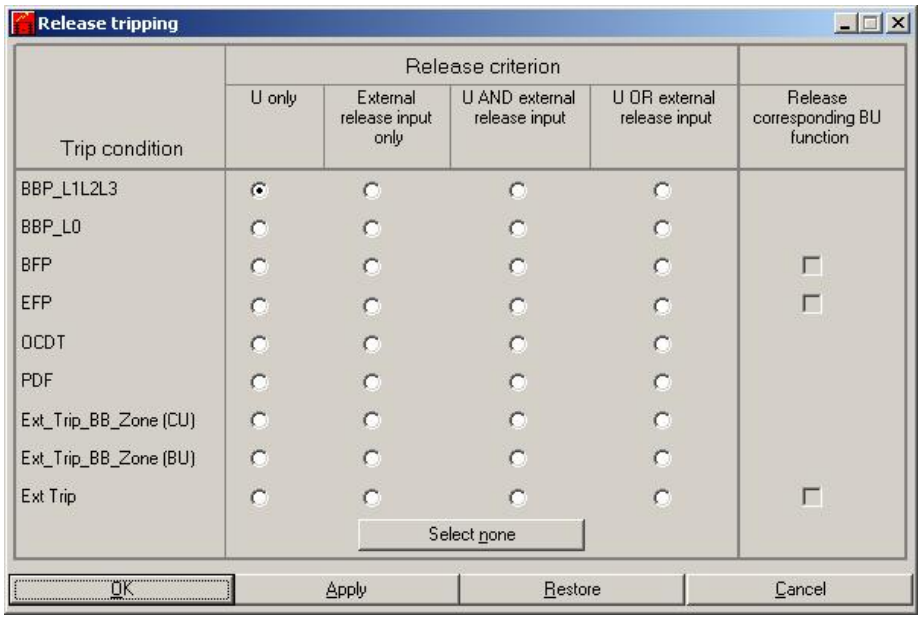

Figure 52 Settings for examples 3 and 4

10.1.3.3 Result

In the event of a fault on a given busbar section (e.g. BB1), the busbar protection function for BB1 trips. A fault on a busbar section will normally cause a voltage collapse, which is detected by the internal undervoltage function for BB1. The undervoltage function thus also trips and transmits a signal to enable tripping of BB1. REB500 then trips all the feeders connected to busbar section 1.

10.1.4 Example 4: BBP function tripping enabled by the internal undervoltage function without VTs on the busbars

10.1.4.1 Problem

In a solidly grounded power system, tripping by the BBP has to be interlocked by the internal undervoltage criterion, but there are no VTs to measure the voltage on the busbars.

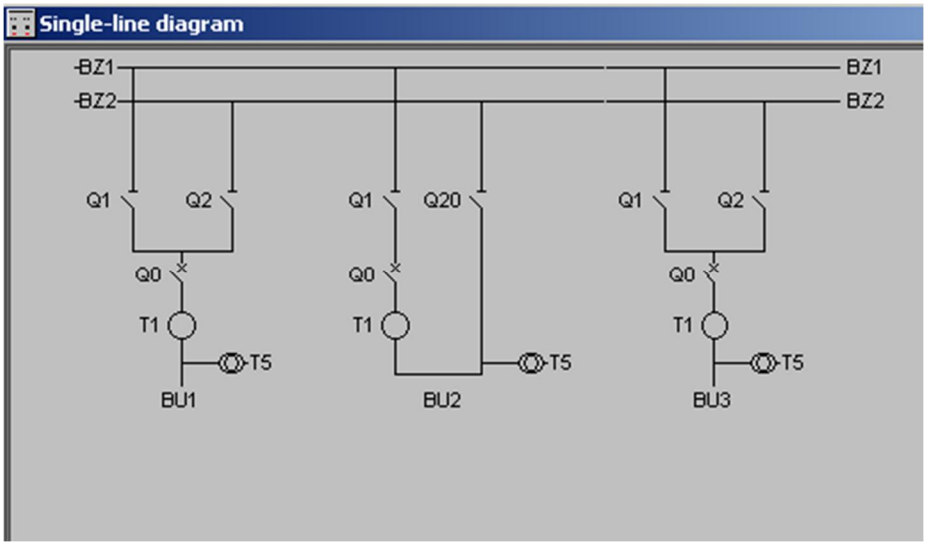

Figure 53 Example 4: Enabling tripping by the BBP function without VTs on the busbars

10.1.4.2 Solution

The settings are the same as in example 3.

REB500 evaluates all the VTs assigned to the respective protection zone (see Technical Manual). Assignment takes place via the intertripping logic, i.e. it depends on the statuses of the isolators. Tripping is only enabled when all the voltage functions assigned to the protection zone in question generate an enabling signal (AND logic).

This means that an overvoltage function cannot enable tripping of the protection zone should the voltage be interrupted either due to a tripped m.c.b. or an open-circuit.

This means that an undervoltage function will enable tripping of the protection zone should the voltage be interrupted either due to a tripped m.c.b. or an open-

circuit. Since, however, the other undervoltage functions assigned to the protection zone are also evaluated; they prevent tripping from taking place.

An interruption of the VT circuit can be detected in the case of an undervoltage function by supervising the bay unit output signal “28805_Voltage criterion” or the central unit output signal “48805_Voltage criterion”.

By activating the input signal “18205_Fuse failure superv. UV” a tripped m.c.b. can be configured to enable tripping of the respective protection zone in the case of an overvoltage function.

REB500 is thus able derive the voltage on the busbars, even if there are no VTs to measure it directly. Tripping of a protection zone to which no VTs are assigned (e.g. all the isolators open) is enabled by the voltage function.

10.1.4.3 Result

In the event of a fault on a given busbar section (e.g. BB1), the busbar protection function for BB1 trips. A fault on a busbar section will normally cause a voltage collapse, which in this case is detected by all the undervoltage functions in all the bay units assigned to BB1. Since for all of them the release criterion is fulfilled, intertripping is enabled and REB500 isolates BB1.

10.1.5 Example 5: BBP neutral measuring system enabled by the internal undervoltage function

10.1.5.1 Problem

In stations in which the maximum load current of some feeders can exceed the minimum fault current of the protection zones (e.g. ground fault in impedance grounded power systems), an interrupted CT circuit can cause a differential current higher than the setting of the current comparison circuit.

10.1.5.2 Solution

To guard against this, the internal REB500 undervoltage function can be configured as an additional neutral current criterion for the BBP function.

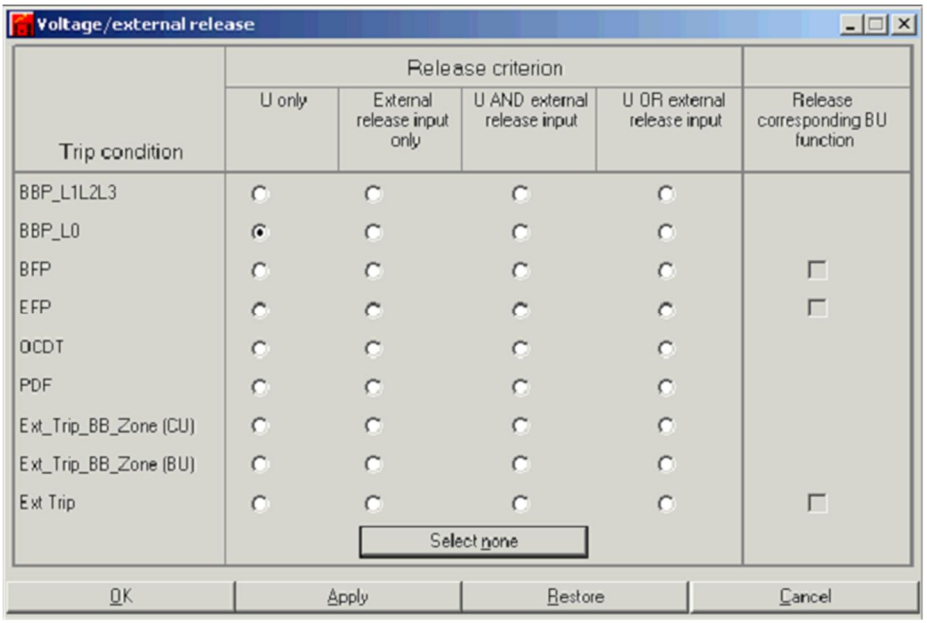

Figure 54 Settings for example 5

10.1.5.3 Result

In the event of a ground fault on a given busbar section (e.g. BB1), the neutral measuring system for BB1 trips. A ground fault on a busbar section will normally cause a voltage collapse, which is detected by the internal undervoltage function for BB1. REB500 then isolates BB1.

Section 11 1½ breaker schemes and duplex stations

This section describes the application of the busbar, breaker failure and end fault protection functions in 1½ breaker schemes and duplex stations. The description is based on typical station layouts.

1½ breaker schemes can be divided into five main groups (versions 1 to 5) which have to be considered separately from the point of view of discrimination, along with one version for the application of REB500 to duplex stations:

1. 1½ breaker scheme with 3 CTs per diameter
2. 1½ breaker scheme with 6 CTs per diameter
3. 1½ breaker scheme with 5 CTs per diameter
4. 1½ breaker scheme with 8 CTs per diameter
5. 1½ breaker scheme with BBP only
6. Duplex stations

Table 7 lists the characteristics of these 6 versions (* indicates that the characteristic is not relevant to REB500).

Table 7 1 ½ breaker scheme groups and duplex stations

Characteristic	1	2	3	4	5	6
Number of CTs	3	6	5	8	*	2
Number of REB500 BUs	3	3	5	8	2	2
Number of REB500 BFP functions	3	3	3	3	0	2
Number of REB500 EFP functions	3	0	3	0	0	2
Number of T-zones protected by REB500	1	1	2	2	0	2
Number of Bay protection devices (LP, TP)	2	2	2	2	*	2
Incidence	high	high	mid	low	mid	low

One advantage of REB500 in the case of a 1½ breaker scheme is that the so-called T zone is fully protected.

The T zone is the section of busbar between the CTs plus the line T up to the open line isolator. The bay protection (distance protection) does not detect faults in this zone correctly, because the voltage measured is the wrong one (open line isolator).

This zone is normally protected by an overcurrent function included in the line protection. This reacts, however, to CT saturation during through-faults (e.g. busbar faults) and could mal-operate.

REB500 uses its current restrained differential protection and phase comparison functions to protect this zone. The corresponding algorithm operates discriminately even if CTs saturate.

Busbar protection systems are generally used to discriminatively protect main busbars. In addition to this, however, REB500 is also able to effectively protect the T zone of a 1½ breaker scheme, because it creates an image of the topology of the entire station with up to 32 independent protection zones, each processed by the busbar protection algorithms (current restrained differential and phase comparison protection).

For REB500 to protect the T zone, its image of the station must include all the components of the 1½ breaker scheme (circuit-breakers, CTs and line isolator).

The same applies when applying the breaker failure and end fault options.

The T zone protection relies on the image of the station to measure (current restrained differential and phase comparison) at the correct points and to intertrip the correct breakers after it has detected an internal fault (both breakers limiting the T zone).

The breaker failure and end fault functions use the REB500 image of the station to intertrip the correct breakers, respectively to transfer trip the correct remote breaker (tripping signal to the re-mote end of a line, i.e. signal 21115_REMOTE TRIP).

In the reverse direction, transfer trip signals from the remote end of a line are distributed to the bay units of the appropriate feeders (signal 11105_External TRIP). An active “External trip” input signal trips the circuit-breakers limiting the T zone via the REB500 tripping contacts and starts the appropriate breaker failure function.

In the following explanations and figures, LP refers to line protection (e.g. distance protection) and TP to transformer protection (e.g. differential protection).

11.1 1½ breaker scheme with 3 CTs per diameter

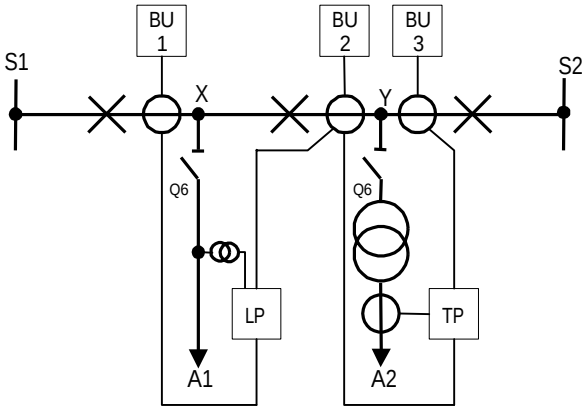

Figure 55 T-Zone protection, version 1

11.1.1 T zone protection with isolator Q6 closed

When the line isolator Q6 is closed, faults in the T zones (X and Y) are detected and tripped by the feeder protection (line protection or transformer protection). The T zones are considered to be part of the line or the transformer feeder.

11.1.2 T zone protection with isolator Q6 open

11.1.2.1 Line

If the VT on A1 is on the line side of the isolator Q6, the distance protection is unable to protect the T zone (X) when the isolator Q6 is open, because the voltage it needs for measurement is either missing or wrong.

In conventional systems an overcurrent function activated by the isolator status signal Q6 protects the T zone.

In stations equipped with REB500, there is the possibility of it taking over the protection of the T zone. To this end, the status signal for isolator Q6 is connected to the bay unit (BU1) and when the isolator is open, a measuring system specifically for the T zone (X) is activated in REB500. As in the case of the main busbars, measurement is based on the current restrained differential and phase comparison busbar protection algorithms, which are considerably more stable during through-faults with CT saturation than overcurrent protection and therefore to be preferred.

11.1.2.2 Transformer feeder

The transformer feeder is normally protected by a differential scheme that continues to protect the T zone even when the isolator Q6 is open. Connecting the isolator Q6 status signal to REB500 is therefore unnecessary.

Each diameter in version 1 is equipped with three CTs. This arrangement means that in relation to the circuit-breakers the protection zones cannot overlap and the three ‘short zones’ be-tween the circuit-breakers and the respective CTs need to be protected by an optional end fault function in each of the bay units BU1…BU3.

11.2 1½ breaker scheme with 6 CTs per diameter

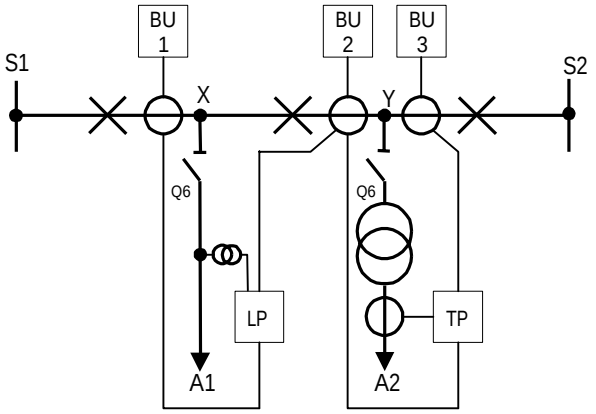

Figure 56 T zone protection, version 2

With the exception of the end fault function, the same conditions and considerations apply to version 2 as to version 1. Since each diameter is equipped with 6 CTs, the protection zones can be arranged to overlap and an additional end fault protection is not needed.

11.3 1½ breaker scheme with 5 CTs per diameter

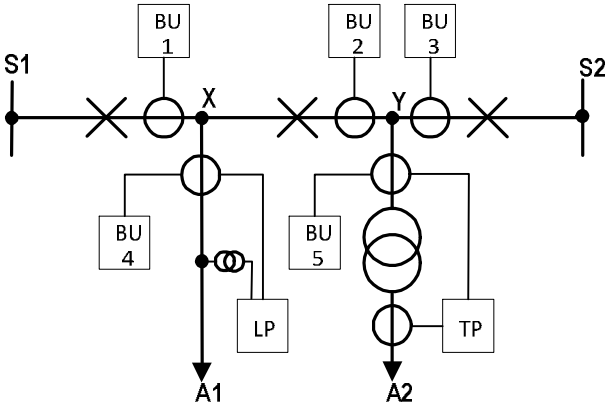

Figure 57 T zone protection, version 3

Because of the additional CTs in the feeders, a clear distinction can be made between T zone and line on the one hand and T zone and transformer feeder on the other. Regardless of the location of any line isolator, the T zones are always protected.

In conventional systems, the T zones in this case are normally protected by high-impedance (circulating current) schemes, i.e. each T zone has its own high-impedance protection.

REB500 can protect the T zones in this kind of arrangement as well. To this end, a REB500 bay unit is installed for each T zone which is also connected to the line CT, respectively the trans-former feeder CT As in the case of the main busbars, measure-ment is based on the current restrained differential and phase comparison busbar protection algorithms and always effectively protects the T zones in all operating modes.

The three ‘short zones’ between the circuit-breakers and the respective CTs need to be protected by an optional end fault function in each of the bay units BU1…BU3.

In this arrangement of the primary plant, REB500 treats the three circuit-breakers and associated CTs as bus-tie breakers:

- Bus-tie breaker 1 (BU1) Zone (S1) ⇔ Zone (X)
- Bus-tie breaker 2 (BU2) Zone (X) ⇔ Zone (Y)
- Bus-tie breaker 3 (BU3) Zone (Y) ⇔ Zone (S2)

REB500 provides the following advantages with regard to the protection of the T zone compared with a conventional high-impedance scheme:

- Only one additional bay unit is needed per T zone instead of a complete high-impedance scheme.

- Compared with a high-impedance scheme, REB500 does not require the main CTs to fulfill such high demands.
- Less wiring because busbar, breaker failure, end fault and T zone protection functions are all in the same unit.

11.4 1½ breaker scheme with 8 CTs per diameter

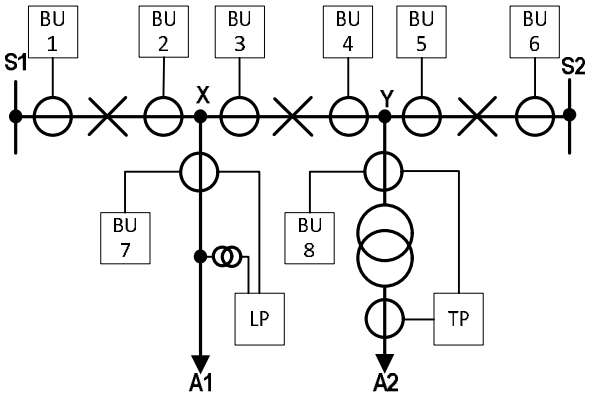

Figure 58 T zone protection, version 4

With the exception of the end fault function, the same conditions and considerations apply to Version 4 as to Version 3.

The three extra CTs (3 bay units) in each diameter create “bus-tie breakers” each with two sets of CTs. By overlapping the zones, faults between the sets of CTs can be tripped without delay.

11.5 1½ breaker scheme with only BBP function

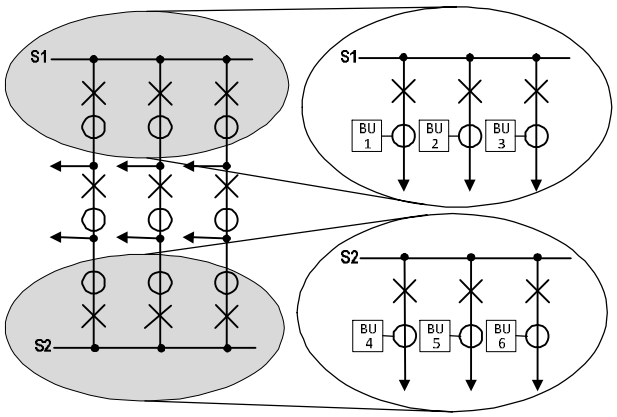

Figure 59 T zone protection, version 5

Where REB500 is only acting as busbar protection (i.e. T zone, breaker failure and end fault protection functions are not required), an image of the T zone is not created in REB500. In this case, a 1½ breaker scheme is considered as two single busbars.

Generally, all the REB500 bay units are connected to the same central unit for this type of configuration. Both busbars S1 and S2 belong then to the same protection system.

On occasions, the user specifies that busbars S1 and S2 shall be protected by independent systems, in which case, two central units are needed and the bay units of one busbar assigned to one and the bay units of the other busbar to the other. The ad-vantage is that the failure of a system or during maintenance only one protection system is affected. Safe operation of the station can be maintained by transferring all the feeders conducting load current to the busbar system, which is still operating.

11.6 Duplex station

The possibility of protecting small ancillary sections of busbar in addition to the main busbars is not limited to 1½ breaker schemes. Based on the locations and CTs and isolators, complex bus-tie or feeder layouts can frequently be broken down into sections of busbar. Figure 60 shows an example of this.

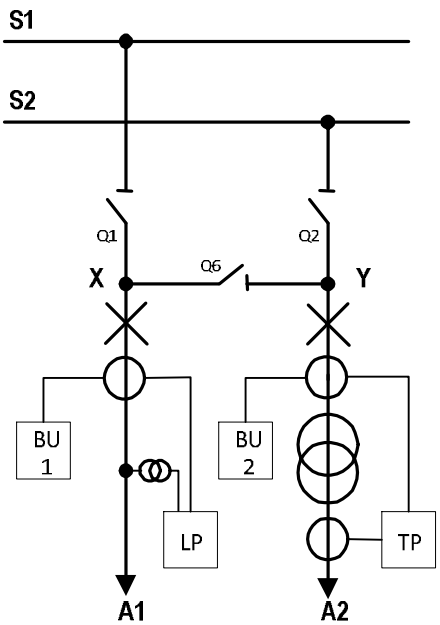

Figure 60 Duplex station

Those busbar protection measuring systems are activated in REB500 that are needed to reflect the prevailing operating conditions (isolator statuses).

Table 8 Measuring systems in duplex stations

Q1	Q2	Q6	Measuring system 1	Measuring system 2	Measuring system 3
●	●	○	S1//X	S2//Y	
●	●	●	S1// X//Y//S2		
●	○	●	S1//X//Y	S2	
○	●	●	S1	S2//X//Y	
○	○	●	S1	S2	X//Y

The symbol // indicates measuring systems determined by the isolator statuses which are linked to form a single measuring system, e.g. X//Y

For operating mode 5, the feeder isolators Q1 and Q2 are open and isolator Q6 is closed and therefore a single measuring system X//Y is formed that discriminatively protects zone X-Y.

11.7 Assignment of bay units

The number of bay units needed in a particular station is in most cases the greater of the total number of circuit-breakers or the total number of CTs in the REB500 image.

The example below shows the assignment of bays to bay units based on version 1 of the T zone protection. The two feeder bays which contain neither circuit-breakers nor CTs are each assigned to the bay unit for the CT and circuit-breaker going to the busbar on their side. The circuit-breaker and CT in the center are assigned to a bay unit of their own.

If there are CTs in the feeders or on both sides of the circuit-breakers and these are included in the busbar protection, the number of bay units needed increases in accordance with the above relationship.

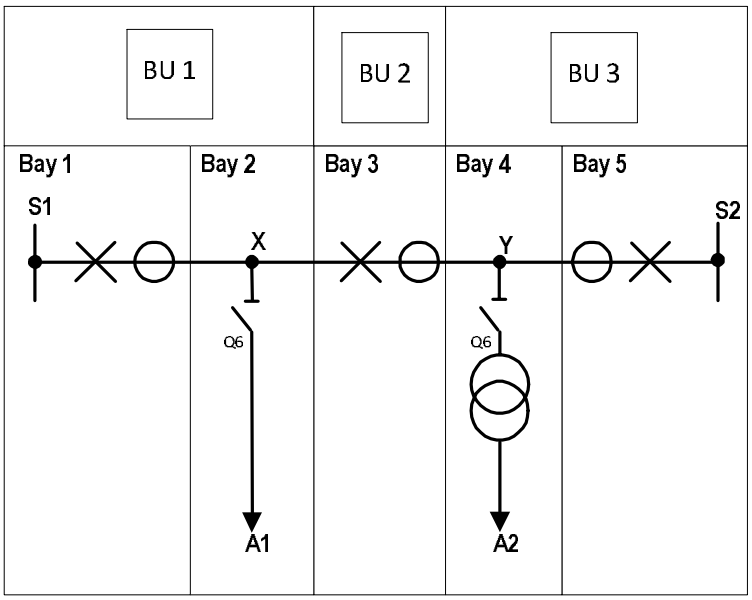

Figure 61 Assignment of bay units

Section 12 Complex stations

In practice, complex bus-tie arrangements are frequently necessary to meet all the requirements with respect to reliability of supply and switching adaptability to suit operating circumstances.

12.1 BBP and BFP in stations with a bypass busbar

If the breaker failure function in BU1 is started by an external device when operating via the bypass busbar, the entire busbar 2 is tripped instead of just circuit-breaker Q9.

This can be prevented if circuit-breaker Q9 in BU2 is equipped with its own CT, thus enabling an additional protection zone to be defined for the busbar protection.

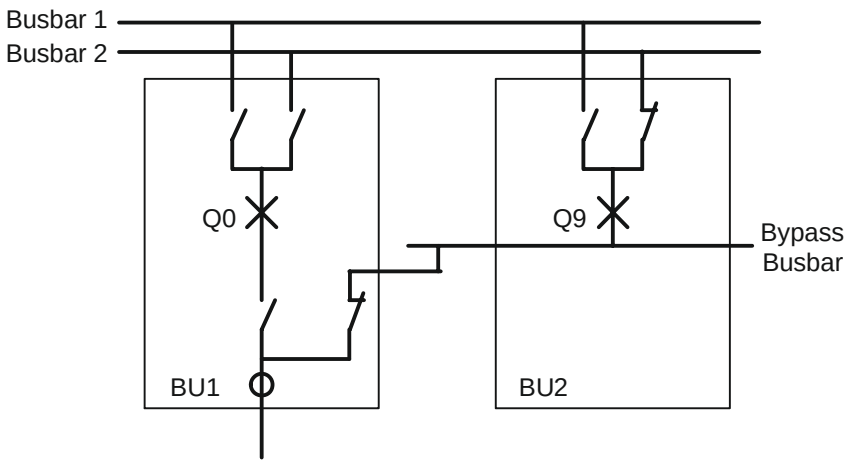

Figure 62 Operation via a bypass busbar

12.2 Busbars with “bus-ties” in series

The term “series tie” is used when referring to the connection of busbars or busbar sections via two or more bus-tie breakers in series. A typical example of a series tie is a 1½ breaker scheme. In an arrangement of this kind, each circuit-breaker/CT pair is treated as a bus-tie breaker (bus-tie A S1-Sx , bus-tie B Sx-Sy , bus-tie C Sy-S2). When all three breakers are closed, busbars S1 and S2 are connected via a “series tie” A-B-C.

Providing all the feeders are part of a 1½ breaker scheme, the necessity to block a bus-tie breaker when there is a parallel connection between the busbars as discussed previously is irrelevant, because there are no feeders with isolators to each of the main busbars and therefore no possibility of the 1½ breaker diameters being paralleled.

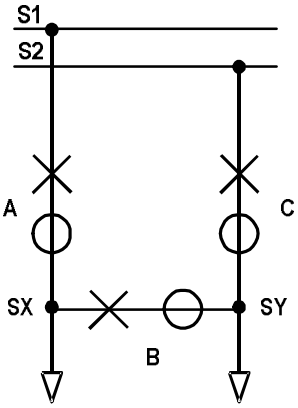

Figure 63 1 ½ breaker scheme

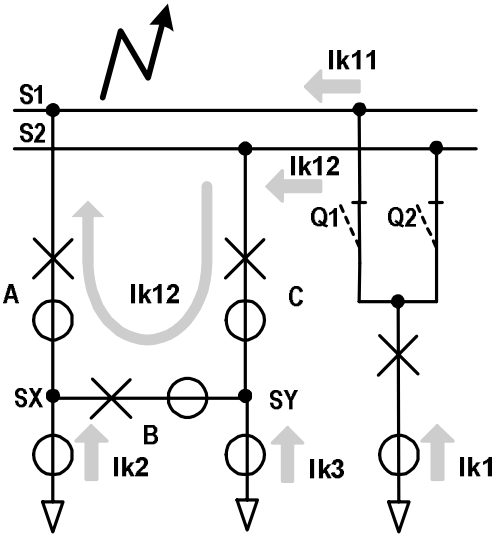

Figure 64 1½ breaker scheme with parallel connection between the busbars

In a mixed system, the response of the system with respect to the parallel connection has to be considered.

When there is a parallel connection between the busbars (Q1 and Q2 closed), the busbar protection measuring systems S1 and S2 are combined to form a single measuring system (S1/S2).

Assuming the three circuit-breakers of the diameter are closed, the current of a busbar fault (Ik1) divides into a direct portion (Ik11) and a portion via the series tie A-

B-C (Ik12). The T zone feeders Sx and Sy can also make fault current contributions (Ik2) and (Ik3). In relation to the main busbars (S1 and S2) in parallel, the current (Ik12) flows out through bus-tie C and back through bus-tie A. For a fault on the busbars, the combined measuring system (S1/S2) is thus presented with two opposing current vectors indicating an external fault and the phase comparison blocks tripping.

To overcome this possibility, REB500 has a special blocking logic which can be configured for series ties. This consists in defining the starting and finishing points of series ties and not evaluating measurements between them when both are in the same measuring zone.

In the example shown, the starting point (busbar connection to bus-tie A) and the finishing point (busbar connection to bus-tie C) belong to the same measuring zone (S1/S2) and therefore the measurements of the three bus-tie breakers A, B and C are not evaluated.

In normal operation, i.e. when the main busbars are not in parallel, the two T zones Sx and Sy treated discriminatively as independent protection zones. When the busbars are paralleled and the series ties excluded from evaluation, the feeder currents (Ik2 and Ik3) are still measured, but not those into and out of the two T zones through their respective bus-ties. The T zone measurements are therefore invalid. For this reason, not only are the measurements of the series tie excluded from evaluation, but in addition the diameter CTs are short-circuited. This means that the two T zones Sx and Sy are connected to the main busbars S1/S2 and a measuring zone S1/Sx/Sy/S2 is created, which correctly includes the two feeder currents (Ik2, Ik3).

Application of the extended bus-tie blocking logic is only possible providing the feeders in the T zones are equipped with protection CT cores connected to REB500 bay units.

It can only be configured for a bus-tie breaker during initial engineering of the system. By opening the HMI500 “Configuration” menu and selecting “Circuit-breakers”, it is possible to see whether the logic is active for a particular bus-tie breaker or not, but the setting cannot be changed.

Feeder	Type	Label	Breaker reclaim time [ms]	Extended blocking function for bus tie-breaker	Breaker position used for BBP
Bay 1	Feeder CB	Q0	120	-	Yes
Bay 2	Coupler CB	Q0	120	No	Yes
Bay 3	Feeder CB	Q0	120	-	Yes

Figure 65 Status of the bus-tie blocking logic

Figure 66 shows a reduced 1½ breaker scheme. With the additional bus-tie logic, the measurements of bus-ties A and B are excluded from evaluation and their CTs short-circuited while the main busbars S1 and S2 are connected in parallel (Q1 and Q2 closed). A combined measuring zone S1/Sx/S2 is created in which all faults are correctly detected.

Figure 67 shows a multiple busbar configuration in which the bus-ties A and B count as series ties from the point of view of busbars S1 and S3. With the additional bus-tie logic, the measurements of bus-ties A and B are excluded from evaluation and their CTs short-circuited while the main busbars S1 and S3 are connected in parallel (Q1 and Q3 closed). A combined measur-ing zone S1/S2/S3 is created in which all faults are correctly de-tected. A drawback, however, is that discrimination is lost for busbar S2 while S1 and S3 are in parallel.

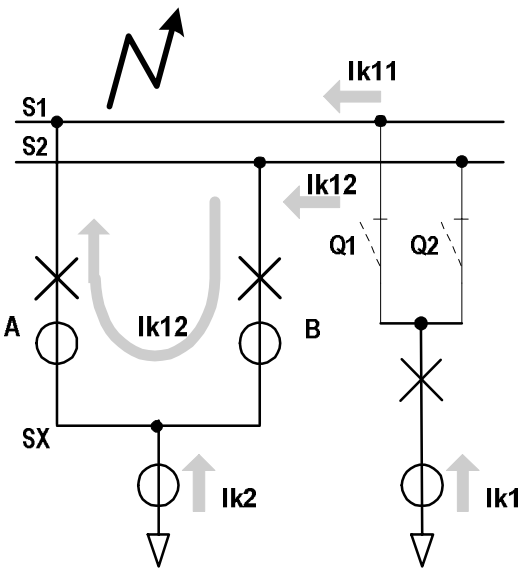

Figure 66 Reduced 1½ breaker scheme with parallel connection between the busbars

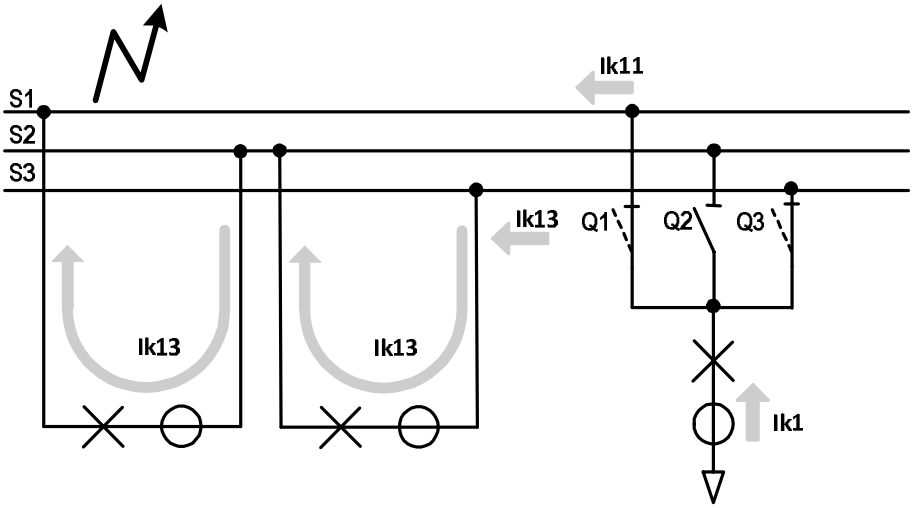

Figure 67 Multiple busbars with parallel connection between the busbars

Excluding the bus-tie measurement only functions absolutely reliably providing the auxiliary contacts reliably reflect the statuses of the bus-tie breakers, which necessarily be assumed unless the auxiliary contacts have a fail-safe mechanical linkage.

12.3 Switchgear bays as bus-tie or feeder circuit-breaker

Some circuit-breakers are designed to be used both as a bus-tie and feeder circuit-breaker. Figure 68 shows an example.

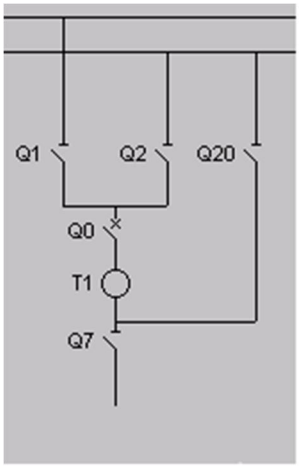

Figure 68 Bus-tie breaker that can also serve as a feeder circuit-breaker

If Q1, Q2, and Q20 are closed while Q2 and Q7 are open we have a bus-tie breaker.

If Q1 or Q2, and Q0 and Q7 are closed, while Q20 is open, we have a feeder circuit-breaker.

Exclusion of the measurement of one or both protection zones is made selective when engineering the system, i.e. the one that is not excluded remains active.

12.4 Control using “11105_External TRIP”

This signal is generated when an external protection device trips (including one in the remote station) and isolates fault on transmission lines or transformer feeders by operating the REB500 tripping contact.

On normal feeders, the “External TRIP” signal only trips the circuit-breaker of the respective feeder. Its effect for special configurations is as follows:

12.4.1 1½ breaker scheme

Both circuit-breakers controlling the feeder are tripped.

12.4.2 Bypass mode

An “External TRIP” signal applied to circuit-breaker Q0 controlling Feeder 1 does not isolate the fault when isolator Q7 is closed (bypass mode). For this reason, circuit-breaker Q0 controlling Coupler 2 is automatically opened. Through-faults can now be correctly tripped.

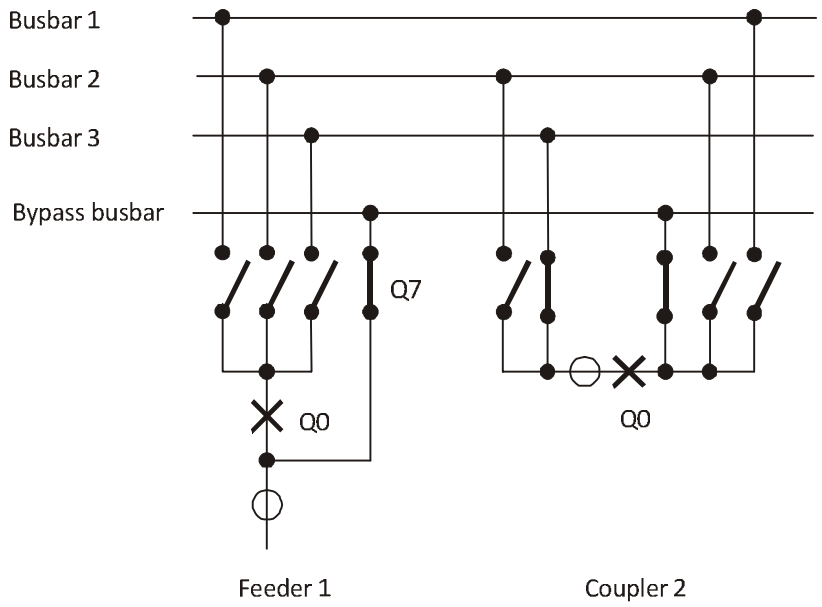

Figure 69 Bypass busbar

12.4.3 Bypass isolator

The “External TRIP” signal trips circuit-breaker Q0 of Feeder 1, but the fault is still not cleared because the bypass isolator Q7 is closed. The busbar protection then intertrips busbar 3 to finally clear the fault.

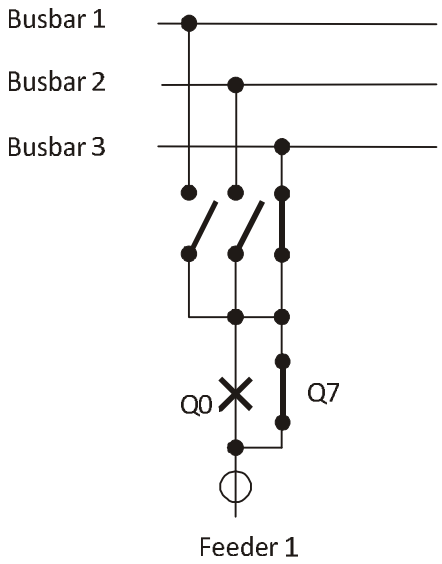

Figure 70 Bypass isolator

Contact us

ABB AB
Substation Automation Products
SE-721 59 Västerås
Sweden
Telephone: +46 (0) 21 32 50 00
Facsimile: +46 (0) 21 14 69 18
http://www.abb.com/substationautomation

Power and productivity
for a better world™