Type 27N High accuracy Undervoltage relay

Type 59N High accuracy Overvoltage relay

This information is supplemental to IB 7.4.1.7-7 Issue E and covers a **Warning** pertaining to maintenance and installation practices.

WARNING:

Undesired relay operation may occur during maintenance or installation if the relay has been exposed to an intermittent DC control power signal. For example, this situation may occur when switching battery chargers or pulling/inserting control power fuses.

As a precautionary measure we recommend, while performing maintenance or testing, to isolate trip output or withdraw the relay from the case to break rear connections.

Rev.1 12/08/2015

ABB Inc.
4300 Coral Ridge Drive
Coral Springs, FL 33065
TEL: 954-752-6700
FAX: 954-345-5329

ABB

IB 7.4.1.7-7
Issue E

INSTRUCTIONS

Single Phase Voltage Relays

Type 27N	HIGH ACCURACY UNDERVOLTAGE RELAY
Type 59N	HIGH ACCURACY OVERVOLTAGE RELAY

Type 27N	Catalog Series 211T	• Standard Case
Type 27N	Catalog Series 411 T	• Test Case
Type 59N	Catalog Series 211 U	• Standard Case
Type 59N	Catalog Series 411U	• Test Case

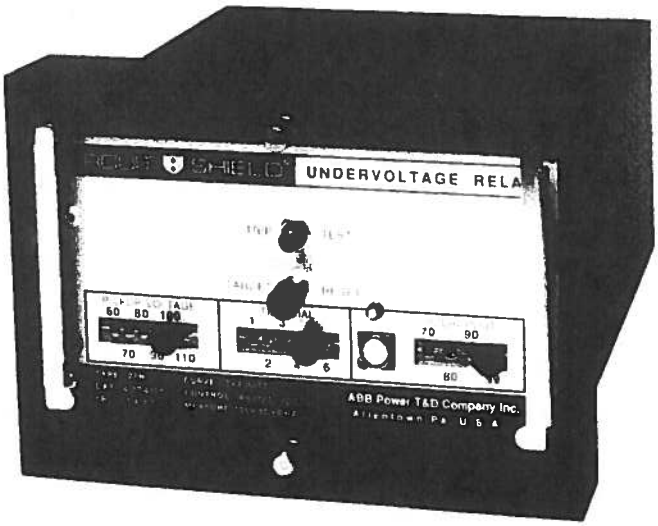

ABB POWER T&D COMPANY INC.
ALLENTOWN, PENNSYLVANIA, USA

TABLE OF CONTENTS

Introduction.....Page 2
Precautions.....Page 2
Placing Relay into Service....Page 2
Application Data.....Page 4
Testing.....Page 10

INTRODUCTION

These instructions contain the information required to properly install, operate, and test certain single-phase undervoltage relays type 27N, catalog series 211T and 411T; and overvoltage relays, type 59N, catalog series 211U and 411U.

The relay is housed in a case suitable for conventional semiflush panel mounting. All connections to the relay are made at the rear of the case and are clearly numbered. Relays of the 411T, and 411U catalog series are similar to relays of the 211T, and 211U series. Both series provide the same basic functions and are of totally drawout construction; however, the 411T and 411U series relays provide integral test facilities. Also, sequenced disconnects on the 410 series prevent nuisance operation during withdrawal or insertion of the relay if the normally-open contacts are used in the application.

Basic settings are made on the front panel of the relay, behind a removable clear plastic cover. Additional adjustment is provided by means of calibration potentiometers inside the relay on the circuit board. The target is reset by means of a pushbutton extending through the relay cover.

PRECAUTIONS

The following precautions should be taken when applying these relays:

1. Incorrect wiring may result in damage. Be sure wiring agrees with the connection diagram for the particular relay before energizing.

2. Apply only the rated control voltage marked on the relay front panel. The proper polarity must be observed when the dc control power connections are made.

3. For relays with dual-rated control voltage, withdraw the relay from the case and check that the movable link on the printed circuit board is in the correct position for the system control voltage.

4. High voltage insulation tests are not recommended. See the section on testing for additional information.

5. The entire circuit assembly of the relay is removable. The unit should insert smoothly. Do not use excessive force.

6. Follow test instructions to verify that the relay is in proper working order.

CAUTION: ***since troubleshooting entails working with energized equipment, care should be taken to avoid personal shock. Only competant technicians familiar with good safety practices should service these devices.***

PLACING THE RELAY INTO SERVICE

1. RECEIVING, HANDLING, STORAGE

Upon receipt of the relay (when not included as part of a switchboard) examine for shipping damage. If damage or loss is evident, file a claim at once and promptly notify Asea Brown Boveri. Use normal care in handling to avoid mechanical damage. Keep clean and dry.

2. INSTALLATION

Mounting:
The outline dimensions and panel drilling and cutout information is given in Fig. 1.

Connections:
Typical external connections are shown in Figure 2. Internal connections and contact logic are shown in Figure 3. Control power must be connected in the proper polarity.

For relays with dual-rated control power: before energizing, withdraw the relay from its case and inspect that the movable link on the lower printed circuit board is in the correct position for the system control voltage. (For units rated 110vdc, the link should be placed in the position marked 125vdc.)

These relays have an external resistor wired to terminals 1 and 9 which must be in place for normal operation. The resistor is supplied mounted on the relay.

These relays have metal front panels which are connected through printed circuit board runs and connector wiring to a terminal at the rear of the relay case. The terminal is marked "G". In all applications this terminal should be wired to ground.

3. SETTINGS

PICKUP
The pickup voltage taps identify the voltage level which the relay will cause the output contacts to transfer.

DROPOUT
The dropout voltage taps are identified as a percentage of the pickup voltage. Taps are provided for 70%, 80%, 90%, and 99% of pickup, or, 30%, 40%, 50%, and 60% of pickup.

Note: operating voltage values other than the specific values provided by the taps can be obtained by means of an internal adjustment potentiometer. See section on testing for setting procedure.

TIME DIAL
The time dial taps are identified as 1,2,3,4,5,6. Refer to the time-voltage characteristic curves in the Application section. Time dial selection is not provided on relays with an Instantaneous operating characteristic. The time delay may also be varied from that provided by the fixed tap by using the internal calibration adjustment.

4. OPERATION INDICATORS

The types 27N and 59N provide a target indicator that is electronically actuated at the time the output contacts transfer to the trip condition. The target must be manually reset. The target can be reset only if control power is available, AND if the input voltage to the relay returns to the "normal" condition.

An led indicator is provided for convenience in testing and calibrating the relay and to give operating personnel information on the status of the relay. See Figure 4 for the operation of this indicator.

Units with a "-L" suffix on the catalog number provide a green led to indicate the presence of control power and internal power supply voltage.

APPLICATION DATA

Single-phase undervoltage relays and overvoltage relays are used to provide a wide range of protective functions, including the protection of motors and generators, and to initiate bus transfer. The type 27N undervoltage relay and type 59N overvoltage relay are designed for those applications where exceptional accuracy, repeatability, and long-term stability are required.

Tolerances and repeatability are given in the Ratings section. Remember that the accuracy of the pickup and dropout settings with respect to the printed dial markings is generally not a factor, as these relays are usually calibrated in the field to obtain the particular operating values for the application. At the time of field calibration, the accuracy of the instruments used to set the relays is the important factor. Multiturn internal calibration potentiometers provide means for accurate adjustment of the relay operating points, and allow the difference between pickup and dropout to be set as low as 0.5%.

The relays are supplied with instantaneous operating time, or with definite-time delay characteristic. The definite-time units are offered in four time delay ranges:

0.1-1 second, 1-10 seconds, 2-20 seconds or 10-100 seconds.

An accurate peak detector is used in the types 27N and 59N. Harmonic distortion in the AC waveform can have a noticible effect on the relay operating point and on measuring instruments used to set the relay. An internal harmonic filter is available as an option for those applications where waveform distortion is a factor. The harmonic filter attenuates all harmonics of the 50/60 Hz. input. The relay then basically operates on the fundamental component of the input voltage signal. See figure 5 for the typical filter response curve. To specify the harmonic filter add the suffix "-HF" to the catalog number. Note in the section on ratings that the addition of the harmonic filter does reduce somewhat the repeatability of the relay vs. temperature variation. In applications where waveform distortion is a factor, it may be desirable to operate on the peak voltage. In these cases, the harmonic filter would not be used.

CHARACTERISTICS OF COMMON UNITS

Type	Pickup Range	Dropout Range	Time Delay (see note 1) Pickup	Time Delay (see note 1) Dropout	Catalog Numbers Std Case	Catalog Numbers Test Case
27N	60 - 110 v	70% - 99%	Inst	Inst	211T01x5	411T01x5
			Inst	1 - 10 sec	211T41x5	411T41x5
			Inst	0.1 - 1 sec	211T61x5	411T61x5
	70 - 120 v	70% - 99%	Inst	Inst	211T03x5	411T03x5
			Inst	1 - 10 sec	211T43x5	411T43x5
			Inst	0.1 - 1 sec	211T63x5	411T63x5
	60 - 110 v	30% - 60%	Inst	Inst	211T02x5	411T02x5
			Inst	1 - 10 sec	211T42x5	411T42x5
			Inst	0.1 - 1 sec	211T62x5	411T62x5
59N	100 - 150 v	70% - 99%	Inst	Inst	211U01x5	411U01x5
			1 - 10 s	Inst	211U41x5	411U41x5
			0.1 - 1 s	Inst	211U61x5	411U61x5

IMPORTANT NOTES:

1. Units are available with 2-20 second and 10-100 second definite time delay ranges. These units are identified by catalog numbers that have the digit "5" or "7" directly following the letter "T" in the catalog number; i.e.: catalog numbers of the form 411T5xxx has the 2-20 second time delay range and the form 411T7xxx has the 10-100 second time delay range.

2. Each of the listed catalog numbers for the types 27N and 59N contains an "x" for the control voltage designation. To complete the catalog number, replace the "x" with the proper control voltage code digit:

   48/125 vdc 7
   250 vdc 5
   220 vdc 2
   48/110 vdc 0

3. To specify the addition of the harmonic filter module, add the suffix "-HF". For example: 411T4175-HF. Harmonic filter not available on type 27N with instantaneous delay timing characteristic.

SPECIFICATIONS

Input Circuit: Rating: type 27N 150v maximum continuous.
type 59N 160v maximum continuous.

Burden: less than 0.5 VA at 120 vac.

Frequency: 50/60 Hz.

Taps: available models include:
Type 27N: pickup - 60, 70, 80, 90, 100, 110 volts.
70, 80, 90, 100, 110, 120 volts.
dropout- 60, 70, 80, 90, 99 percent of pickup.
30, 40, 50, 60 percent of pickup.

Type 59N: pickup - 100, 110, 120, 130, 140, 150 volts.
dropout- 60, 70, 80, 90, 99 percent of pickup.

Operating Time: See Time-Voltage characteristic curves that follow.
Instantaneous models: 3 cycles or less.

Reset Time: 27N: less than 2 cycles; 59N: less than 3 cycles.
(Type 27N resets when input voltage goes above pickup setting.)
(Type 59N resets when input voltage goes below dropout setting.)

Output Circuit: Each contact

@ 120 vac	@ 125 vdc	@ 250 vdc	
30 amps.	30 amps.	30 amps.	tripping duty.
5 amps.	5 amps.	5 amps.	continuous.
3 amps.	1 amp.	0.3 amp.	break, resistive.
2 amps.	0.3 amp.	0.1 amp.	break, inductive.

Operating Temperature Range: -30 to +70 deg. C.

Control Power:

Models available for		Allowable variation:
48/125 vdc @ 0.05 A max.	48 vdc nominal	38- 58 vdc
48/110 vdc @ 0.05 A max.	110 vdc "	88-125 vdc
220 vdc @ 0.05 A max.	125 vdc "	100-140 vdc
250 vdc @ 0.05 A max.	220 vdc "	176-246 vdc
	250 vdc "	200-280 vdc

Tolerances: (without harmonic filter option, after 10 minute warm-up)

Pickup and dropout settings with respect to printed dial markings (factory calibration) = +/- 2%.

Pickup and dropout settings, repeatability at constant temperature and constant control voltage = +/- 0.1%. (see note below)

Pickup and dropout settings, repeatability over "allowable" dc control power range: +/- 0.1%. (see note below)

Pickup and dropout settings, repeatablility over temperature range:
-20 to +55°C +/- 0.4% -20 to +70°C +/-0.7%
0 to +40°C +/- 0.2% (see note below)

Note: the three tolerances shown should be considered independent and may be cumulative. Tolerances assume pure sine wave input signal.

Time Delay: Instantaneous models: 3 cycles or less.
Definite time models: +/- 10 percent or +/-20 millisecs. whichever is greater.

Harmonic Filter: (optional) All ratings are the same except:
Pickup and dropout settings, repeatability over temperature range:
0 to +55°C +/- 0.75% -20 to +70°C +/-1.5%
+10 to +40°C +/- 0.40%

Dielectric Strength: 2000 vac, 50/60 Hz., 60 seconds, all circuits to ground.

Seismic Capability: More than 6g ZPA biaxial broadband multifrequency vibration without damage or malfunction. (ANSI C37.98-1978)

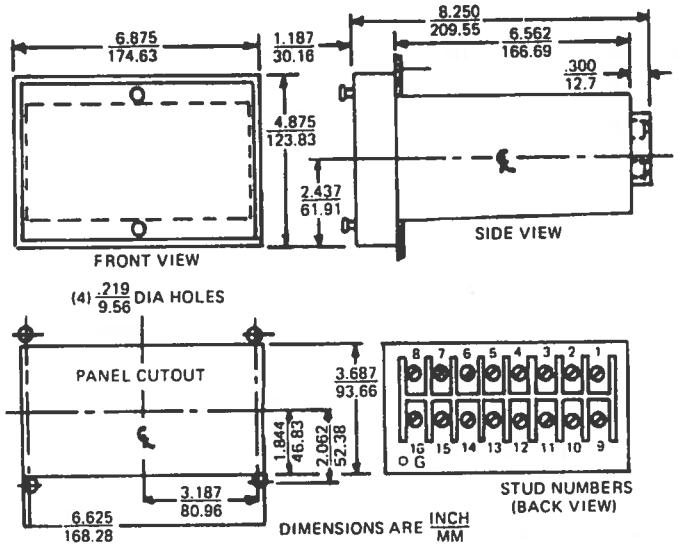

Figure 1: Relay Outline and Panel Drilling

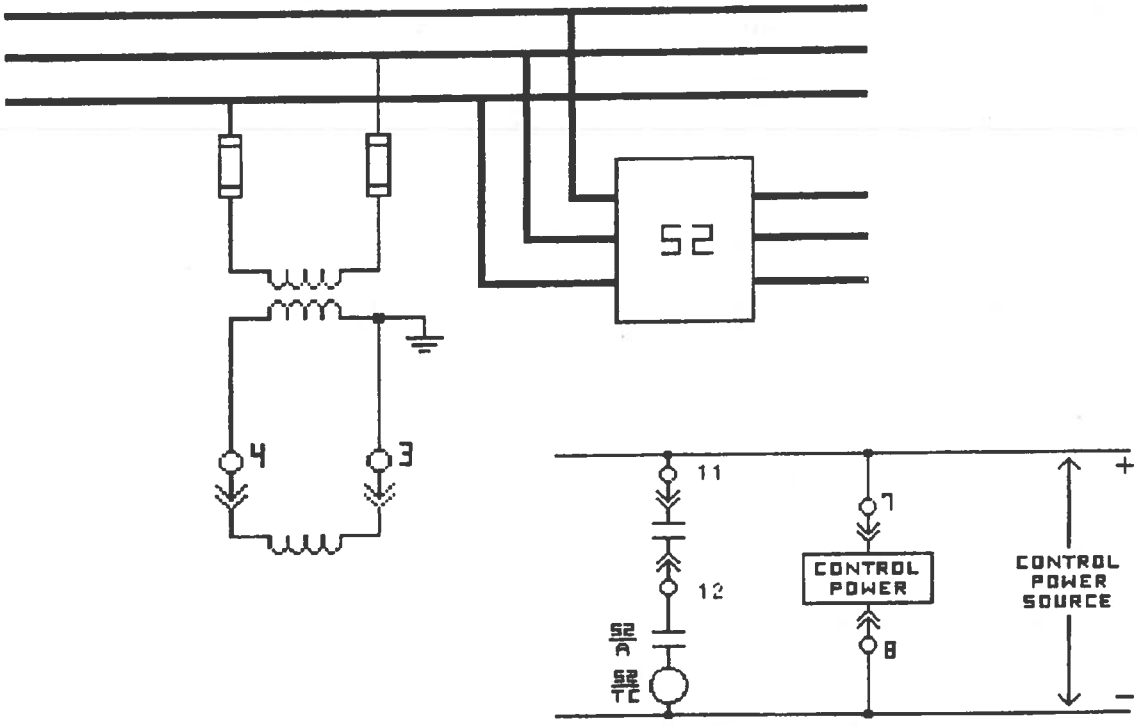

Figure 2: Typical External Connections

Figure 3: INTERNAL CONNECTION DIAGRAM AND OUTPUT CONTACT LOGIC

The following table and diagram define the output contact states under all possible conditions of the measured input voltage and the control power supply. "AS SHOWN" means that the contacts are in the state shown on the internal connection diagram for the relay being considered. "TRANSFERRED" means the contacts are in the opposite state to that shown on the internal connection diagram.

Condition	Contact State	
	Type 27N	Type 59N
Normal Control Power AC Input Voltage Below Setting	Transferred	As Shown
Normal Control Power AC Input Voltage Above Setting	As Shown	Transferred
No Control Voltage	As Shown	As Shown

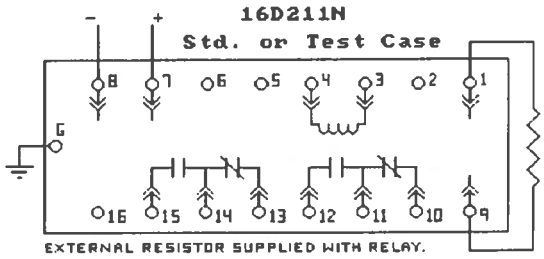

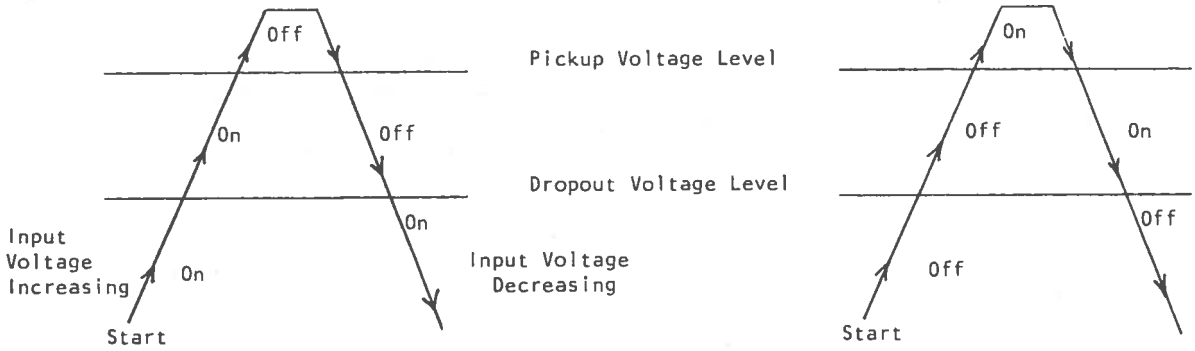

Figure 4a: ITE-27N Operation of Dropout Indicating Light

Figure 4b: ITE-59N Operation of Pickup Indicating Light

Figure 4: Operation of Pickup/Dropout Light-Emitting-Diode Indicator

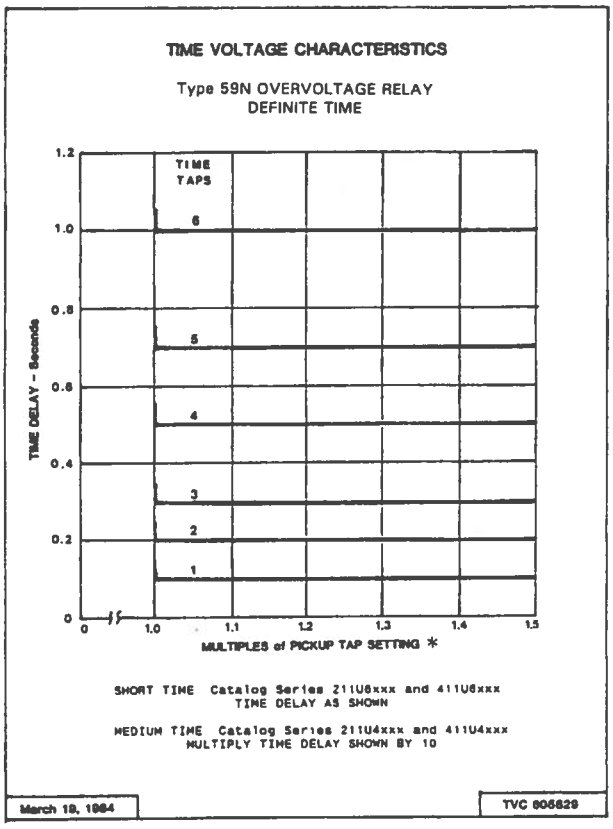

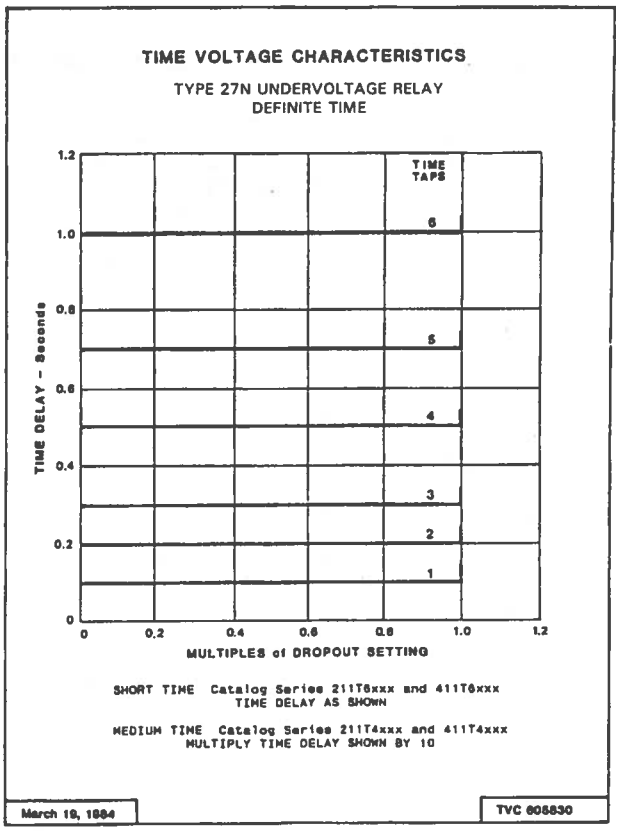

* NOT TO EXCEED INPUT RATING

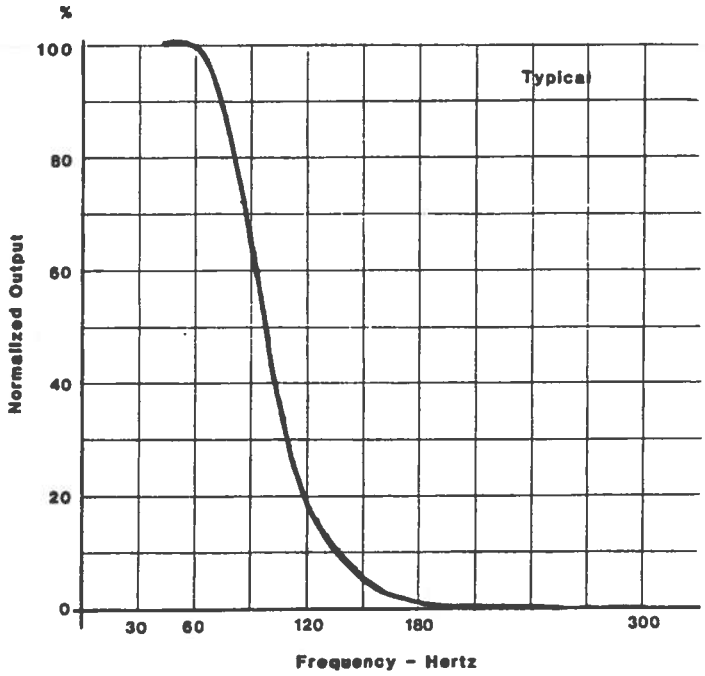

The time-voltage characteristic is definite-time as shown above. The time-delay values verses time-dial selection for the 2-20 sec. and the 10-100 sec. definite time models are as follows:

Time Dial Tap Pin Position	Nominal Delay Time (sec) 411T5xxx	411T7xxx
# 1	2 seconds	10 seconds
# 2	4	20
# 3	6	30
# 4	10	50
# 5	14	70
# 6	20	100

Figure 5: Normalized Frequency Response - Optional Harmonic Filter Module

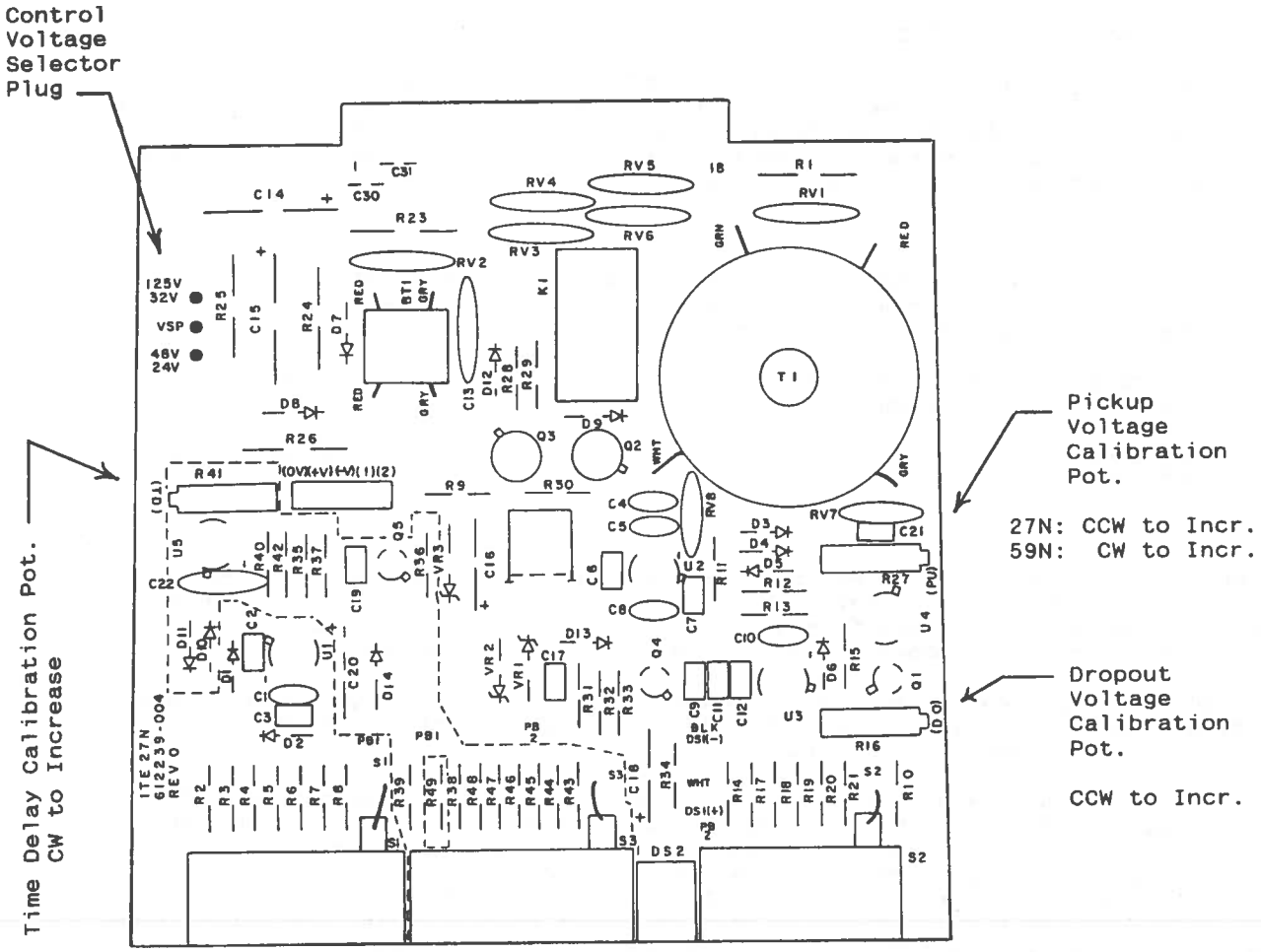

Figure 6: Typical Circuit Board Layouts, types 27N and 59N

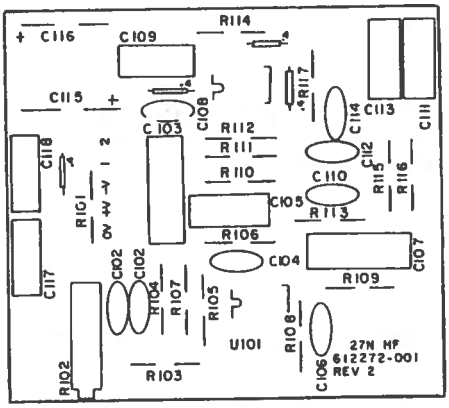

Figure 7: Typical Circuit Board Layout - Harmonic Filter Module

TESTING

1. MAINTENANCE AND RENEWAL PARTS

No routine maintenance is required on these relays. Follow test instructions to verify that the relay is in proper working order. We recommend that an inoperative relay be returned to the factory for repair; however, a circuit description booklet CD7.4.1.7-7 which includes schematic diagrams, can be provided on request. Renewal parts will be quoted by the factory on request.

211 Series Units

Drawout circuit boards of the same catalog number are interchangible. A unit is identified by the catalog number stamped on the front panel and a serial number stamped on the bottom side of the drawout circuit board.

The board is removed by using the metal pull knobs on the front panel. *Removing the board with the unit in service may cause an undesired operation.*

An 18 point extender board (cat 200X0018) is available for use in troubleshooting and calibration of the relay.

411 Series Units

Metal handles provide leverage to withdraw the relay assembly from the case. Removing the unit in an application that uses a normally closed contact will cause an operation. The assembly is identified by the catalog number stamped on the front panel and a serial number stamped on the bottom of the circuit board.

Test connections are readily made to the drawout relay unit by using standard banana plug leads at the rear vertical circuit board. This rear board is marked for easier identification of the connection points.

Important: these relays have an external resistor mounted on rear terminals 1 and 9. In order to test the drawout unit an equivilent resistor must be connected to terminals 1 & 9 on the rear vertical circuit board of the drawout unit. The resistance value must be the same as the resistor used on the relay. A 25 or 50 watt resistor will be sufficient for testing. If no resistor is available, the resistor assembly mounted on the relay case could be removed and used. *If the resistor from the case is used, be sure to remount it on the case at the conclusion of testing.*

Test Plug:

A test plug assembly, catalog number 400X0002 is available for use with the 410 series units. This device plugs into the relay case on the switchboard and allows access to all external circuits wired to the case. See Instruction Book IB 7.7.1.7-8 for details on the use of this device.

2. HIGH POTENTIAL TESTS

High potential tests are not recommended. A hi-pot test was performed at the factory before shipping. If a control wiring insulation test is required, partially withdraw the relay unit from its case sufficient to break the rear connections before applying the test voltage.

3. BUILT-IN TEST FUNCTION

Be sure to take all necessary precautions if the tests are run with the main circuit energized.

The built-in test is provided as a convenient functional test of the relay and associated circuit. When you depress the button labelled TRIP, the measuring and timing circuits of the relay are actuated. When the relay times out, the output contacts transfer to trip the circuit breaker or other associated circuitry, and the target is displayed. The test button must be held down continuously until operation is obtained.

4. ACCEPTANCE TESTS

Follow the test procedures under paragraph 5. For definite-time units, select Time Dial #3. For the type 27N, check timing by dropping the voltage to 50% of the dropout voltage set (or to zero volts if preferred for simplification of the test). For the type 59N check timing by switching the voltage to 105% of pickup (do not exceed max. input voltage rating.) Tolerances should be within those shown on page 5. If the settings required for the particular application are known, use the procedures in paragraph 5 to make the final adjustments.

5. CALIBRATION TESTS

Test Connections and Test Sources:
Typical test circuit connections are shown in Figure 8. Connect the relay to a proper source of dc control voltage to match its nameplate rating (and internal plug setting for dual-rated units). Generally the types 27N and 59N are used in applications where high accuracy is required. The ac test source must be stable and free of harmonics. A test source with less than 0.3% harmonic distortion, such as a "line-corrector" is recommended. Do not use a voltage source that employs a ferroresonant transformer as the stabilizing and regulating device, as these usually have high harmonic content in their output. The accuracy of the voltage measuring instruments used must also be considered when calibrating these relays.

If the resolution of the ac test source adjustment means is not adequate, the arrangement using two variable transformers shown in Figure 9 to give "coarse" and "fine" adjustments is recommended.

When adjusting the ac test source do not exceed the maximum input voltage rating of the relay.

LED Indicator:
A light emitting diode is provided on the front panel for convenience in determining the pickup and dropout voltages. The action of the indicator depends on the voltage level and the direction of voltage change, and is best explained by referring to Figure 4.

The calibration potentiometers mentioned in the following procedures are of the multi-turn type for excellent resolution and ease of setting. For catalog series 211 units, the 18 point extender board provides easier access to the calibration pots. If desired, the calibration potentiometers can be resealed with a drop of nail polish at the completion of the calibration procedure.

Setting Pickup and Dropout Voltages:
Pickup may be varied between the fixed taps by adjusting the pickup calibration potentiometer R27. Pickup should be set first, with the dropout tap set at 99% (60% on "low dropout units"). Set the pickup tap to the nearest value to the desired setting. The calibration potentiometer has approximately a +/-5% range. Decrease the voltage until dropout occurs, then check pickup by increasing the voltage. Re-adjust and repeat until pickup occurs at precisely the desired voltage.

Potentiometer R16 is provided to adjust dropout. Set the dropout tap to the next lower tap to the desired value. Increase the input voltage to above pickup, and then lower the voltage until dropout occurs. Readjust R16 and repeat until the required setting has been made.

Setting Time Delay:
Similarly, the time delay may be adjusted higher or lower than the values shown on the time-voltage curves by means of the time delay calibration potentiometer R41. On the type 27N, time delay is initiated when the voltage drops from above the pickup value to below the dropout value. On the type 59N, timing is initiated when the voltage increases from below dropout to above the pickup value. Referring to Fig. 4, the relay is "timing out" when the led indicator is lighted.

External Resistor Values: The following resistor values may be used when testing 411 series units. Connect to rear connection points 1 & 9.

Relays rated	48/125 vdc:	4000 ohms;	(-HF models with harmonic filter 4000 ohms)
	48/110 vdc:	4000 ohms;	(-HF models with harmonic filter 3200 ohms)
	250 vdc:	10000 ohms;	(-HF models with harmonic filter 9000 ohms)
	220 vdc:	10000 ohms;	(-HF models with harmonic filter 9000 ohms)

ABB Power T&D Company, Inc.
Protective Relay Division
7036 North Snowdrift Road
Allentown, PA 18106

Issue E (5/96)
Supersedes Issue D

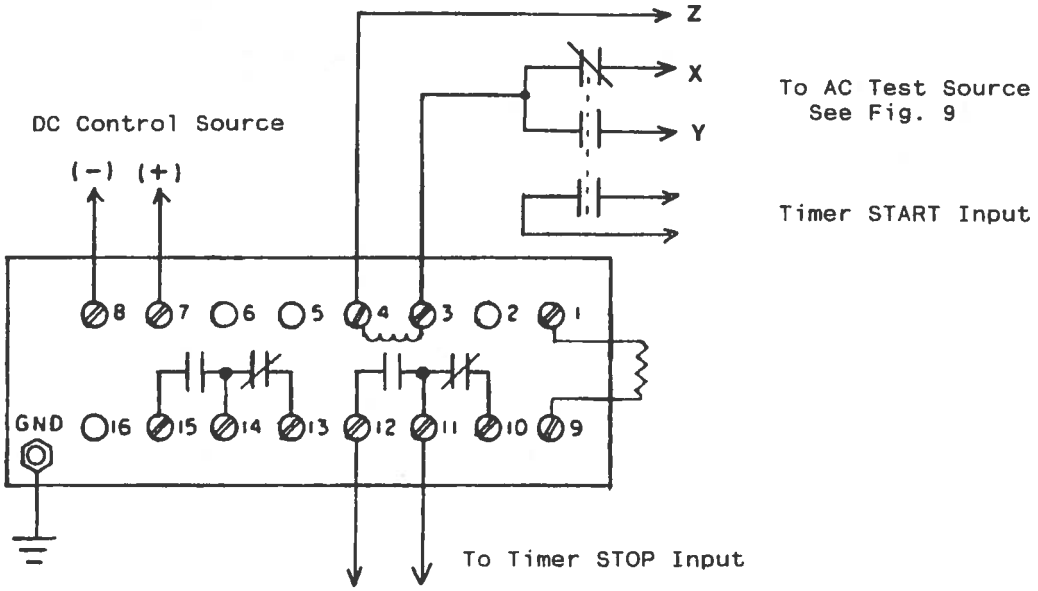

Figure 8: Typical Test Connections

T1, T2	Variable Autotransformers	(1.5 amp rating)
T3	Filament Transformer	(1 amp secondary)
V	Accurate AC Voltmeter	

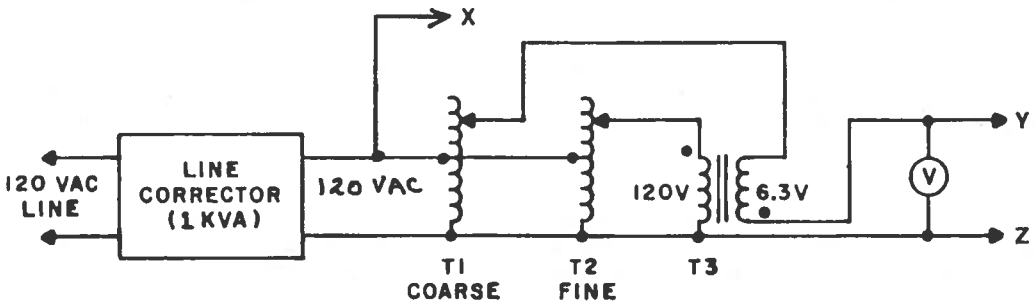

Figure 9: AC Test Source Arrangement

These instructions do not purport to cover all details or variations in equipment, nor to provide for every possible contingency to be met in conjunction with installation, operation, or maintenance. Should particular problems arise which are not covered sufficiently for the purchaser's purposes, the matter should be referred to ABB.