Operator's manual

RXHB 411 and RAHB 411
Compact breaker failure relay and protection assemblies

About this manual

DocID: 1MRK 509 071-UEN
Issue date: January 2001
Status: New
Version: Initial version

Manufacturer:

ABB Automation Products AB
Substation Automation Division
SE-721 59 Västerås
Sweden
Tel: +46 (0) 21 34 20 00
Fax: +46 (0) 21 14 69 18
Internet: http://www.abb.se

Contents

Contents

Chapter 1 Introduction

About this chapter

This chapter introduces the user to the content in the manual. The intended use of the manual and the intended audience is described. The introduction chapter also contains references to other documents.

1 Introduction to the operator’s manual

1.1 About this manual

The operator’s manual is intended to be used by the operator during normal service when the plastic cover, which covers the relay, is not removed. The manual does not contain any instructions for commissioning or testing and the protection has therefore to be commissioned and tested before any of the instructions in this manual could be carried out. The manual describes how the local human-machine-interface (HMI) is used and how to read off service values and disturbance information.

The operator’s manual contains the following chapters:

- The *safety information* chapter presents warning and note signs, which the user should draw attention to.
- The *human machine interface* chapter contains descriptions about the local human-machine-interface (HMI).
- The *operations during normal service* chapter contains instructions on how to handle the service value menu and the indications menu during normal service.

1.2 Intended audience

1.2.1 General

The operator’s manual is addressing the operator, responsible for operating the protection on a daily basis. This includes reading off service values and clearing disturbances.

1.2.2 Requirement

The personnel who operate the protection must be experienced and have a basic knowledge in using protection equipment. The manual contains words which are commonly used when describing this kind of protection equipment.

1.3 Related documents

Document related to COMBIFLEX© assemblies	Identity number
Buyer’s guide, Connection and installation components in COMBIFLEX©	1MRK 513 003-BEN
Buyer’s guide, Panel mounting cases for COMBIFLEX© relays	1MRK 513 013-BEN
Buyer’s guide, Relay accessories and components	1MRK 513 004-BEN

Document related to COMBIFLEX© assemblies	**Identity number**
Buyer's guide, Test system COMBITEST	1MRK 512 001-BEN
Buyer's guide, DC-DC converter	1MRK 513 001-BEN
Buyer's guide, Auxiliary relays	1MRK 508 015-BEN

Documents related to RXHB 411 and RAHB 411	**Identity number**
Technical overview brochure	1MRK 509 070-BEN
Connection and setting guide (only RXHB 411)	1MRK 509 070-WEN
Operator's manual	1MRK 509 071-UEN
Technical reference manual	1MRK 509 072-UEN
Installation and commissioning manual	1MRK 509 073-UEN

1.4 Revisions

Revision	**Description**
-	Initial version

Chapter 2 Safety information

About this chapter

This chapter contains safety information. Warning and note signs are presented which attend the user to be careful during certain operations in order to avoid human injuries or damage to equipment.

1 Safety signs

1.1 Description of safety signs

1.1.1 The warning sign

The warning sign informs the user that certain operations should be avoided in order to prevent human injuries or damage to equipment.

1.1.2 The note sign

The note sign informs the user to be careful when using the product in certain situations and notifies the user to facts that could be of special interest during certain operations.

1.2 Warning signs

Warning!

Always avoid to touch the circuitry when the plastic cover, which covers the relay, is removed. The product contains electronic circuitries which can be damaged if exposed to static electricity (ESD). The electronic circuitries also contain high voltage which is lethal to humans.

1.3 Note signs

Note!

If the LED's are flashing or the green 'In service' LED is dark, an internal fault has occurred. Read the self supervision section in the technical reference manual for further information.

Chapter 3 Human-machine-interface

About this chapter

This chapter describes the human-machine-interface (HMI) on the front of the protection towards the user. The chapter contains descriptions on the different parts and how they are used. The chapter also contains descriptions on how different menus and dialogs, such as the main menu and the saving dialog, are used.

1 Local human-machine-interface (HMI)

1.1 Overview

The local human-machine-interface (HMI) provides local communication between the user and the relay. Disturbance information, service values and setting parameters etc. are available via the local HMI.

The HMI module includes three light emitting diodes (LED), a graphic LCD-display and six push-buttons. The LEDs on the HMI provide the primary status information of the relay and the display provides more detailed information. The HMI is also used for relay configuration and for reading off service values and disturbances.

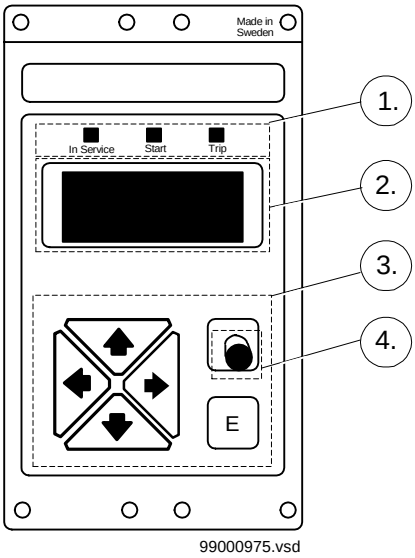

1. Light emitting diodes (LED)
2. Graphic LCD-display
3. Push buttons
4. Cover button (when plastic cover is on)

Figure 1: Local human-machine-interface (HMI) front panel.

1.2 LED indication

Green LED	The operating condition of the relay is normal.
Yellow LED	Indicates start and can be configured in HMI to be latched or not.
Red LED	Indicates trip and can be configured in HMI to be latched or not.

1.3 Graphic LCD-display

The graphic liquid crystal display (LCD) provides primary status information of the relay. It is normally dark. The display turns off automatically after leaving the menu tree or approximately 30 minutes after any button has been pressed. This function can be selected to be on or off.

1.4 Menu window

The menu window presents the paths and the menus in the relay.

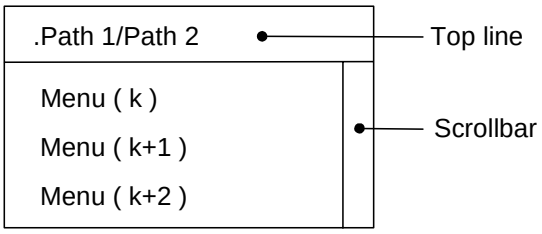

99000149.vsd

Row one, Top line:

- If the path presents more than two menu levels a dot will appear at the beginning of the row.
- Path 1 presents the name of the previous menu.
- Path 2 presents the name of the active menu.

Row two, three and four:

- Menus k, k+1 and k+2 appear in the three bottom rows.
- When the cursor highlights one of the rows, it indicates the path the user can activate by selecting the right arrow or the ‘E’ button.

When more than four rows are available a scroll bar appears at the right side and indicates were the cursor is. To change the active path within the menu tree press the up or down arrow button.

1.5 Saving dialog

The saving dialog will appear when moving upwards in the menu tree from a menu which consists of editable values or configurations. The saving dialog window lets the user to choose a command YES, NO or CANCEL, by using the left or right arrow button. Confirm with the ‘E’ button.

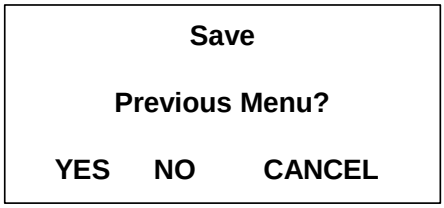

99000150.vsd

YES	Save the previous setting(s) and exit.
NO	Exit the menu without saving any changes.
CANCEL	Returns to the previous setting(s) or to the previous menu.

1.6 Push-buttons

The number of buttons used on the local HMI is reduced to the minimum acceptable amount to make communication as simple as possible for the user. The buttons normally have more than one function, depending on where they are used in the menu tree.

All buttons have one function in common: when the display is in idle (dark, non activate) mode, selecting any of them results in activation of the display.

Push button	Let you...
C	1. Move upwards in menu tree. 2. Turn-off display at main menu. 3. Read service values and disturbance information.
E	1. Confirm choices in menu. 2. Move downwards in menu tree.
	1. Move left in dialog boxes and editable menus. 2. Move upwards in menu tree. 3. Turn-off display at main menu.
	1. Move right in dialog boxes and editable menus. 2. Move downwards in menu tree.
	1. Move upwards in specific menu. 2. Increase editable values. 3. Select choice in dialog box and configuration.
	1. Move downwards in specific menu. 2. Decrease editable values. 3. Select choice in dialog box and configuration.

2 Menu tree

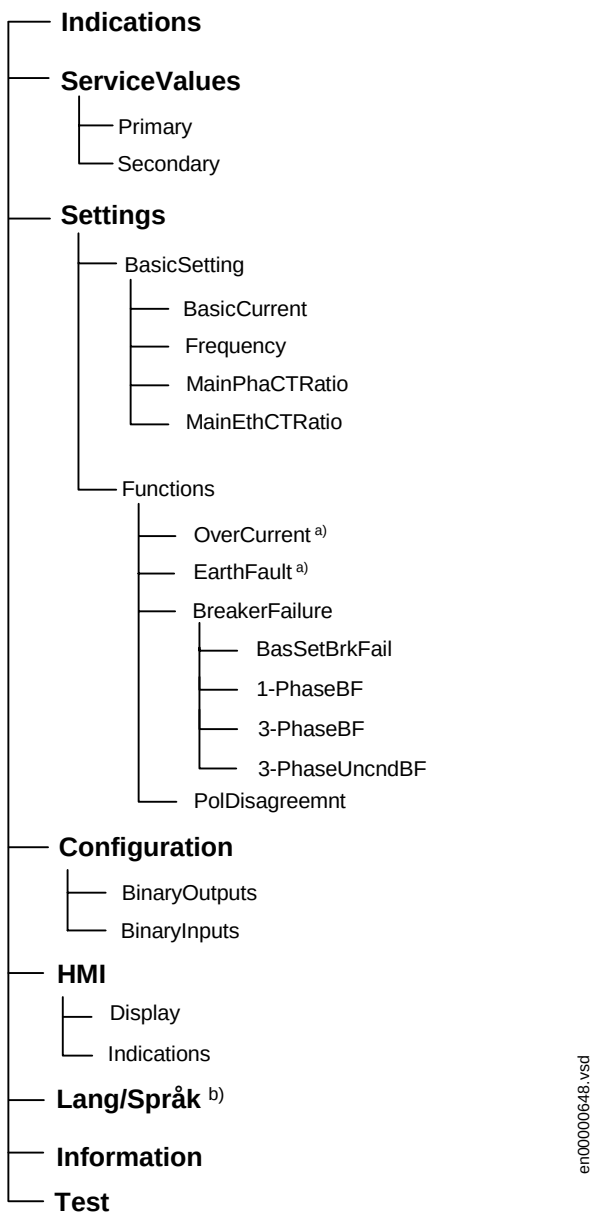

a) Functions available as options

b) English and the other available language is Swedish

Figure 2: Menu tree RXHB 411.

Chapter 4 Operations during normal service

About this chapter

This chapter contains instructions on how primary service values and disturbance information can be retrieved during normal service without removing the plastic cover which covers the relay.

1 Overview

Before these task can be performed the relay has to be installed and commissioned according to the instructions given in the installation and commissioning manual.

There are basically two operations that can be performed in normal service mode without removing the plastic cover. The operator can view the primary service values and check the disturbance information. The operator can also clear the stored disturbance which has occurred. The secondary values are only possible to retrieve when the plastic cover is removed. The cover-button located on the plastic cover is used for browsing the different menus.

Note!

If the LED's are flashing or the green 'In service' LED is dark, an internal fault has occurred. Read the self supervision section in the technical reference manual for further information.

2 Using the service values menu

2.1 Reading of primary service values

This section describes how the user can read the primary service values during normal service when the plastic cover is not removed.

The primary service values can be viewed during normal service by pressing the cover-button located on the plastic cover that covers the relay. If a disturbance has occurred the indication menu will be presented when pressing the cover-button.

Procedure

1. **Press the cover-button located on the plastic cover.**

   The display on the local HMI lights up and presents the first set of service values.

2. **Press the cover-button to present the second set of service values.**
3. **Press the cover-button to turn-off the display.**

2.2 Service values menu

The following values are presented when the service value menu is viewed:

Service values	Provides information about
IL1	The actual phase-1 current
IL2	The actual phase-2 current
IL3	The actual phase-3 current
I_N	The actual neutral current
Freq	The actual frequency

Out-of-range (OOR) is presented if a secondary current value is over four times the set basic current level.

3 Using the indications menu

3.1 Reading disturbance information

This section describes how the user can read the recorded disturbances during normal service when the plastic cover is not removed.

Disturbance information can be checked and cleared during normal service by pressing the cover-button located on the plastic cover that covers the relay. If the user press the cover-button and no disturbance has occurred, the service values will be presented.

Procedure

1. **Press the cover-button located on the plastic cover.**

   The display on the local HMI lights up and presents the status of the overcurrent functions (option).

2. **Press the cover-button to present the remaining status of the overcurrent functions (option).**
3. **Press the cover-button to present status of the earth-fault functions (option).**
4. **Press the cover-button to present status of the breaker failure functions.**
5. **Press the cover-button to present status of the breaker failure re-trip functions.**
6. **Press the cover-button to present status of the breaker failure back-up trip functions and the pole-disagreement function.**
7. **Press the cover-button to present the recorded primary trip values (option).**
8. **Press the cover-button to present the externally recorded service values.**
9. **Press the cover-button and the display presents the clearing dialog box.**

   Here the recorded disturbances can be cleared or not.

10. **Press and hold down the cover-button for more than two seconds to clear the disturbances or press the button shortly to not clear the disturbances.**

    If the user choose to clear the disturbances, the saved values and LED’s will be cleared. After the decision the display will present the first set of service values.

11. **Press the cover-button to present the second set of service values.**
12. **Press the cover-button to turn-off the display.**

    The display will return to the main menu and idle mode.

3.2 Indications menu

The following indications are presented when the indications menu is entered. Through this menu also primary recorded trip values and externally recorded service values are presented. The recorded primary trip values are always from the last disturbance.

Indications	Start	Trip	Option	Function description, status for
I>L1	☐	☐	Yes	Low set overcurrent stage, single-phase IL1.
I>L2	☐	☐	Yes	Low set overcurrent stage, single-phase IL2.
I>L3	☐	☐	Yes	Low set overcurrent stage, single-phase IL3.
I>	☐	☐	Yes	Low set overcurrent stage, multi-phase faults.
I>>L1	☐	☐	Yes	High set overcurrent stage, single-phase IL1.
I>>L2	☐	☐	Yes	High set overcurrent stage, single-phase IL2.
I>>L3	☐	☐	Yes	High set overcurrent stage, single-phase IL3.
I>>	☐	☐	Yes	High set overcurrent stage, multi-phase faults.
I_N>	☐	☐	Yes	Low set earth-fault stage.
I_N>>	☐	☐	Yes	High set earth-fault stage.
1-PhBF	☐			Single-phase start of breaker failure.
	L123			Phase indication which caused single-phase start.
3-PhBF	☐			Three-phase start of breaker failure.
UncndBF	☐			Three-phase unconditional start of breaker failure.
ReTrL1		☐		Re-trip function, single-phase IL1.
ReTrL2		☐		Re-trip function, single-phase IL2.
ReTrL3		☐		Re-trip function, single-phase IL3.
ReTrip		☐		Re-trip function, three-phase.

Indications	Start	Trip	Option	Function description, status for
BkUpTr1		☐		Back-up trip 1 function, three-phase.
BkUpTr2		☐		Back-up trip 2 function, three-phase.
PoleDis	☐	☐		Pole-disagreement function.

All start functions are connected to the yellow LED and all trip functions are connected to the red LED. The appearance of the boxes in the local HMI describes the status of the function.

Appearance of indication boxes	Provides information about
Filled (black)	Latest recorded event.
Grayed	Previous recorded event.
Blank	No recorded event (since last clearing).
Criteria for a new event: All started functions has to be reset before the relay can treat a new disturbance as a new event.	

Recorded trip values (option)	Provides information about
IL1	The recorded phase-1 current.
IL2	The recorded phase-2 current.
IL3	The recorded phase-3 current.
I_N	The recorded neutral current.

Externally recorded service values	Provides information about
ExtIL1	The recorded phase-1 current.
ExtIL2	The recorded phase-2 current.
ExtIL3	The recorded phase-3 current.
$ExtI_N$	The recorded neutral current.

Out-of-range (OOR) is presented if a recorded current in secondary value is over four times the set basic current level.