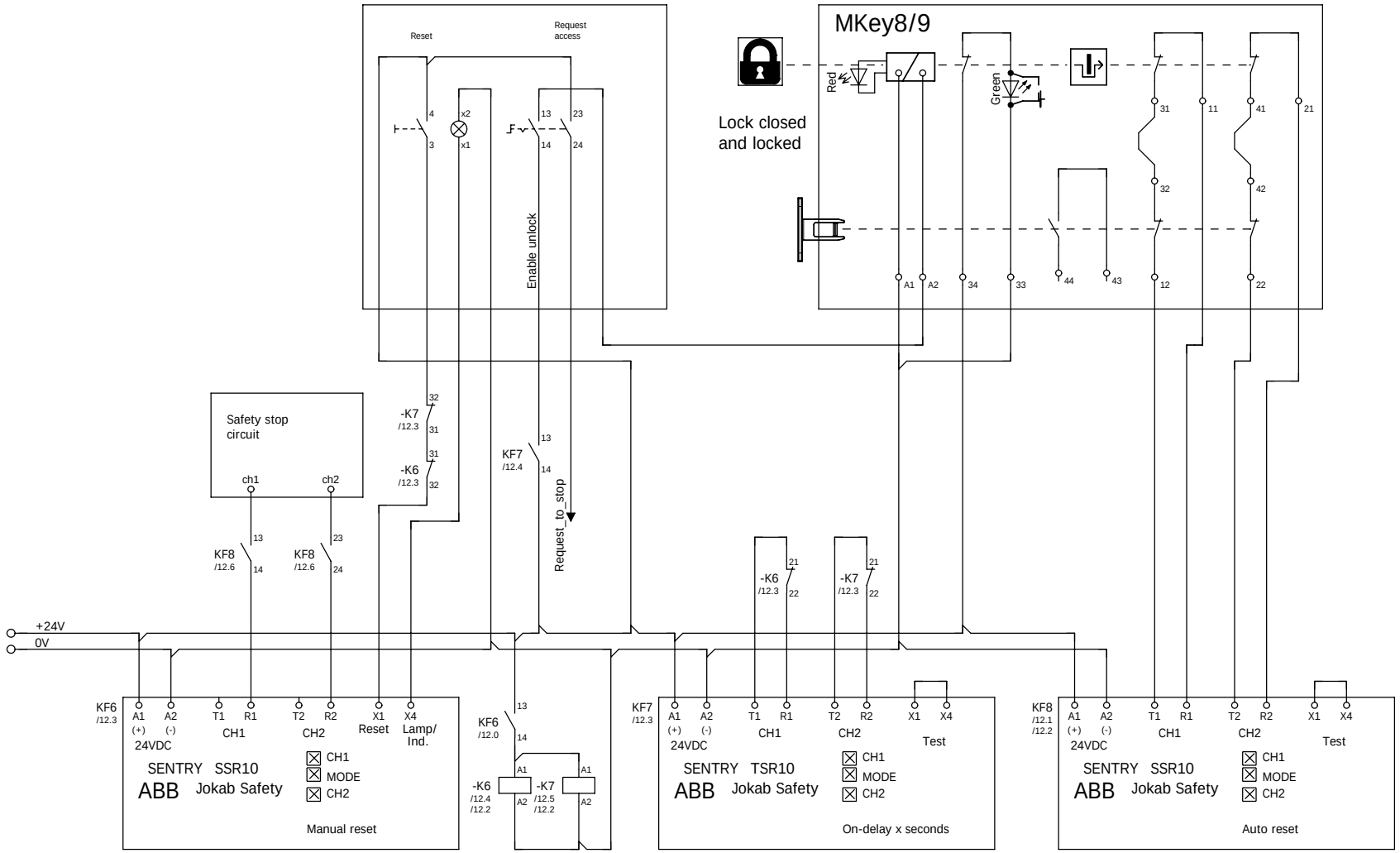

Safety stop

Safety relay with auxillary contactors to stop and interlock dangerous parts of the machine

Unlock

Safety relay, the contacts will close x seconds after the safety stop is activated.The relay will enable an unlock of the MKey switch

Door interlock

Safety relay to monitor the MKey switch.

11d 12m

			Datum	2019-09-16	ABB	ABB Jokab Safety	MKey_Delay_Sentry_2TLC010013T0004		= GKey	
			Redigerare	SEHAHAL5					+	
			Kontollerad		New products			HHg_New	Blad	12
Ändring	Datum	Namn	Ursprung		Ersättning för	Ersatt av			Blad	21 / 32