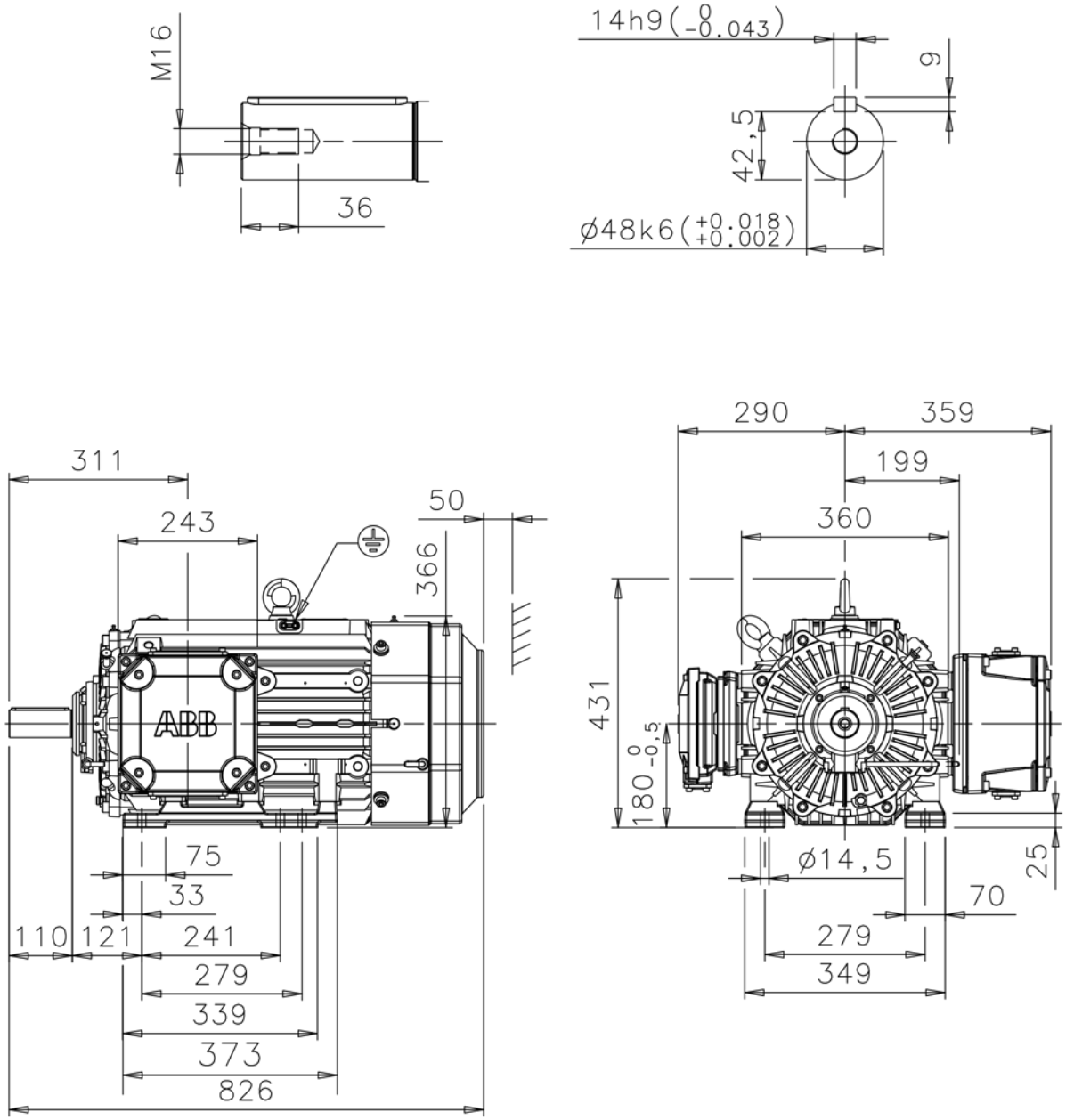

Additional information:

Dimension Print	Motor Type: M3KP/HP/GP(H) 180ML_ 2-12 B3, B6, B7, B8, V6	Document No: 3GZF500118-67 B 14 KP 180 A
Description: SQUIRREL CAGE MOTOR, WITH TERMINAL BOX RHS AND AUXILIARY TERMINAL BOX LHS		

Unit:	Motors and Generators	Issued by:	R.Leikkonen	Replaces:
Date:	01.06.2015	Approved by:	R.Kalliokoski	Replaced by:

ABB Oy	Customer Reference:	ABB