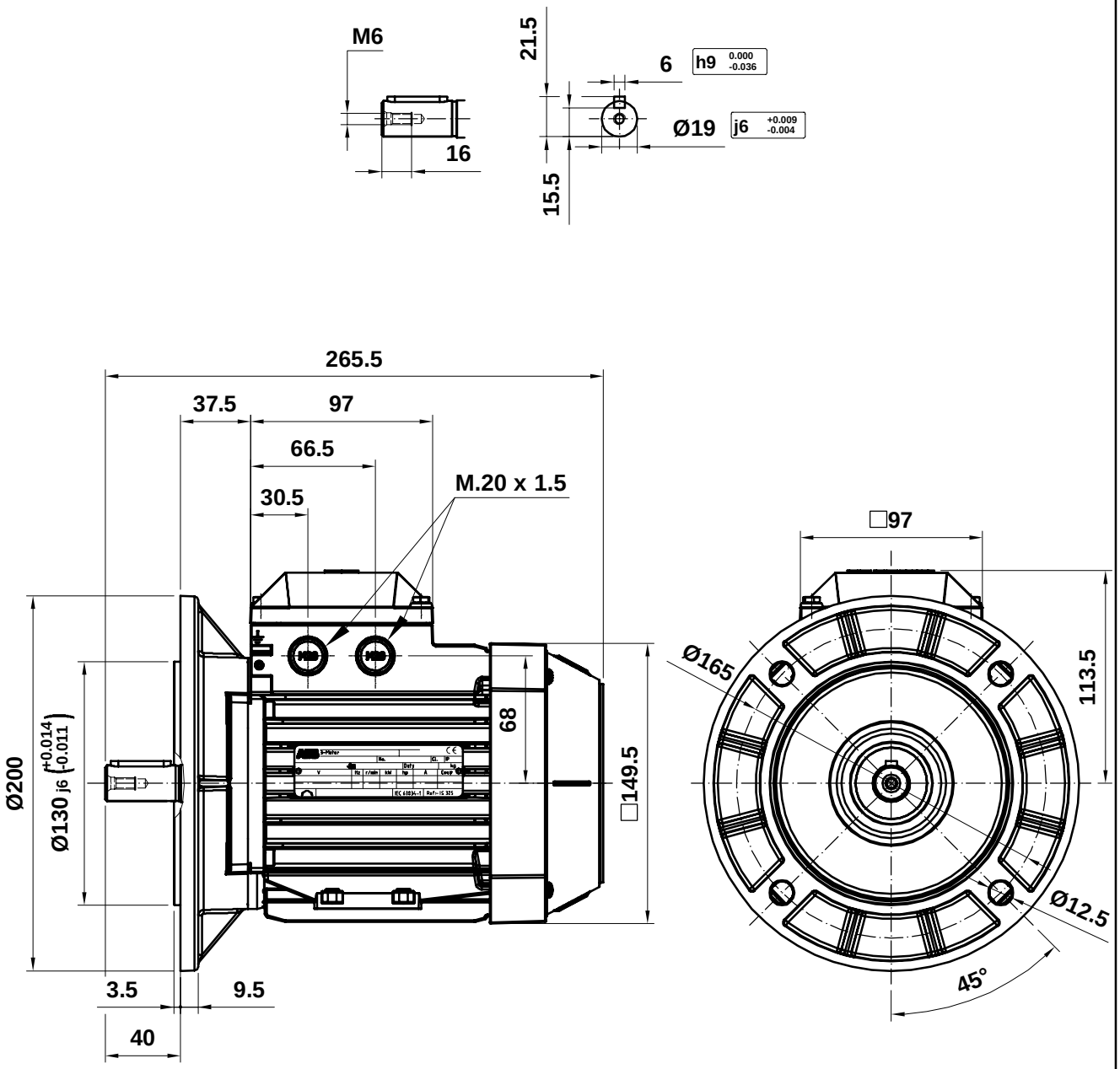

M2AA 080

Motor Dimension Print	Motor Type : M2AA 080	Document Nº : A1.5406 / 3D A2.5016

Description :

Motor flange mounted IM3001 / Motor con brida IM3001

Unit : Discrete Automation & Motion - Fáb. Motores	Issued by : ERM / L.Moreno	Replaces :
Date : 2012-02-09	Approved by : ERM / G.Blanes	Replaced by :

Asea Brown Boveri, S.A.

Customer Reference :

ABB