ABB INDUSTRIAL DRIVES

ACS880 regenerative rectifier control program

Firmware manual

List of related manuals

General manuals	Code (English)
ACS880 multidrive cabinets and modules safety instructions	3AUA0000102301
Electrical planning instructions for ACS880 multidrive cabinets and modules	3AUA0000102324
Cabinet-installed multidrive manuals	
ACS880-107 inverter units hardware manual	3AUA0000102519
ACS880 primary control program firmware manual	3AUA0000085967
ACS880 primary control program quick start-up guide	3AUA0000098062
ACS880-207 IGBT supply units hardware manual	3AUA0000130644
ACS880 IGBT supply control program firmware manual	3AUA0000131562
Optimal grid control of ACS880 IGBT supply control program supplement	3AXD50000164745
ACS880 multidrives, Optimal grid control (option +N8053) supplement	3AXD50000220717
ACS880-307 (+A003) diode supply units hardware manual	3AUA0000102453
ACS880-307 +A018 diode supply units hardware manual	3AXD50000011408
ACS880 diode supply control program firmware manual	3AUA0000103295
ACS880-607 1-phase brake units hardware manual	3AUA0000102559
ACS880-607 3-phase brake units hardware manual	3AXD50000020967
ACS880 (3-phase) brake control program firmware manual	3AXD50000022034
ACS880-907 regenerative rectifier units hardware manual	3AXD50000020546
ACS880 regenerative rectifier control program firmware manual	3AXD50000020827
ACS880-1607 DC/DC converter units hardware manual	3AXD50000023644
ACS880 DC/DC converter control program firmware manual	3AXD50000024671
Supply module manuals	
ACS880-204 IGBT supply modules hardware manual	3AUA0000131525
ACS880-304 +A003 diode supply modules hardware manual	3AUA0000102452
ACS880-304 +A018 diode supply modules hardware manual	3AXD50000010104
ACS880-904 regenerative rectifier modules hardware manual	3AXD50000020457
Option manuals	
ACS-AP-x assistant control panels user's manual	3AUA0000085685
Drive composer start-up and maintenance PC tool user's manual	3AUA0000094606
Manuals for I/O extension modules, fieldbus adapters, safety options etc.	

You can find manuals and other product documents in PDF format on the Internet. See section Document library on the Internet on the inside of the back cover. For manuals not available in the Document library, contact your local ABB representative.

Firmware manual

ACS880 regenerative rectifier control program

Table of contents

2. Start-up

3AXD50000020827 Rev C
EN
EFFECTIVE: 2022-03-31

Table of contents

1. Introduction to the manual

What this chapter contains . . . 9
Applicability . . . 9
Safety instructions . . . 9
Target audience . . . 10
Contents of the manual . . . 10
Related documents . . . 10
Terms and abbreviations . . . 11
Cybersecurity disclaimer . . . 12

2. Start-up

3. Using the control panel

4. Program features

What this chapter contains . . . 17
Overview of the control program . . . 17
Programming via parameters . . . 18
Adaptive programming . . . 18
  Settings and diagnostics . . . 19
Control locations for start/stop . . . 19
  Local control vs. external control . . . 19
    External control . . . 19
    Local control . . . 20
Run enable, Start/stop and Start enable control . . . 21
  Settings and diagnostics . . . 21
Operating modes . . . 22
  Settings and diagnostics . . . 22
Charging . . . 23
  Timing diagram . . . 24
  Settings and diagnostics . . . 24
Application programming . . . 25
Control interfaces . . . 25
  Programmable analog inputs . . . 25
    Settings and diagnostics . . . 25
  Programmable analog outputs . . . 25
    Settings and diagnostics . . . 25
  Programmable digital inputs and outputs . . . 25
    Settings and diagnostics . . . 25
  Programmable relay outputs . . . 26
    Settings and diagnostics . . . 26
  Programmable I/O extensions . . . 26
    Settings and diagnostics . . . 26
  Fieldbus control . . . 27
    Settings and diagnostics . . . 27
  External controller interface . . . 28

General . . . 28
Topology . . . 28
Communication . . . 28
Settings . . . 29
Data storage parameters . . . 29
Settings . . . 29
Safety and protections . . . 30
Programmable protection functions . . . 30
Emergency stop (parameters *121.04*...*121.05*) . . . 30
External events (parameters *131.01*...*131.10*) . . . 30
Local control loss detection (parameter *149.05*) . . . 30
External earth leakage fault source selection (parameter *131.28*) . . . 30
External earth leakage action selection (parameter *131.29*) . . . 30
Fuse trip fault source (parameter *131.38*) . . . 30
Brake chopper fault source (parameter *131.39*) . . . 30
Automatic fault resets . . . 30
Settings . . . 30
Temperature supervision . . . 31
Settings and diagnostics . . . 31
Maintenance timers and counters . . . 31
Settings . . . 31
Load analyzer . . . 32
Peak value logger . . . 32
Amplitude loggers . . . 32
Settings . . . 32
Default I/O connection diagram (BCU) . . . 33
Parameters that define the use of relay outputs . . . 34
Parameters that define the use of digital inputs . . . 34
Reduced run function . . . 35
Activation of the reduced run function . . . 36
Settings and diagnostics . . . 36
User lock . . . 37
Settings . . . 37
Parallel-connected regenerative rectifier units . . . 37
Settings . . . 37

5. Parameters

What this chapter contains . . . 39
Terms and abbreviations . . . 39
Reserved digital inputs and relay outputs . . . 40
Summary of parameter groups . . . 40
Parameter listing . . . 42
101 Actual values . . . 42
104 Warnings and faults . . . 43
105 Diagnostics . . . 44
106 Control and status words . . . 45
107 System info . . . 51
110 Standard DI, RO . . . 51
111 Standard DIO, FI, FO . . . 56
112 Standard AI . . . 59
113 Standard AO . . . 61
114 Extension I/O module 1 . . . 64
115 Extension I/O module 2 . . . 80

116 Extension I/O module 3 . . . 83
119 Operation mode . . . 87
120 Start/stop . . . 88
121 Start/stop mode . . . 93
131 Fault functions . . . 94
133 Generic timer & counter . . . 100
136 Load analyzer . . . 106
147 Data storage . . . 109
149 Panel port communication . . . 110
150 FBA . . . 111
151 FBA A settings . . . 114
152 FBA A data in . . . 116
153 FBA A data out . . . 116
154 FBA B settings . . . 116
155 FBA B data in . . . 118
156 FBA B data out . . . 118
160 DDCS communication . . . 118
161 DDCS transmit . . . 120
162 DDCS receive . . . 123
190 Additional actual values . . . 126
192 Additional actual values 2 . . . 128
195 HW configuration . . . 129
196 System . . . 131

6. Additional parameter data

What this chapter contains . . . 137
Terms and abbreviations . . . 137
Fieldbus addresses . . . 138
Parameter groups 101…107 . . . 139
Parameter groups 110…196 . . . 142

7. Fault tracing

What this chapter contains . . . 161
Safety . . . 161
Indications . . . 162
  Warnings and faults . . . 162
  Editable messages . . . 162
Warning/fault history and analysis . . . 162
  Event logs . . . 162
    Auxiliary codes . . . 162
    Factory data logger . . . 162
  Other data loggers . . . 163
    User data logger . . . 163
    PSL2 data logger . . . 163
  Parameters that contain warning/fault information . . . 163
Warning messages . . . 164
Fault messages . . . 173

8. Fieldbus control through a fieldbus adapter

What this chapter contains . . . 185
System overview . . . 186

Basics of the fieldbus control interface 187
Control word and Status word 187
Actual values 187
Contents of the fieldbus Control word 188
Contents of the fieldbus Status word 189
Setting up the regenerative rectifier unit for fieldbus control 190

9. Drive-to-drive link

Further information

1

Introduction to the manual

What this chapter contains

This chapter describes the contents of the manual. It also contains information on the compatibility, safety and intended audience.

Applicability

This manual applies to the ACS880 regenerative rectifier control program (ARRFX v3.4x or later).

The control program described in this manual is used with cabinet-installed regenerative rectifier unit of type ACS880-907, and regenerative rectifier module of type ACS880-904.

Note: The module types included in ACS880-907 or ACS880-904 delivery are rectifier module of type ACS880-104 and L-filter module of type BL-xx-x. See the appropriate hardware manual for the type equivalence.

Safety instructions

Follow all safety instructions delivered with the regenerative rectifier.

- Read the **complete safety instructions** before you install, commission, use or service the regenerative rectifier. The complete safety instructions are given in the *Hardware manual* of your regenerative rectifier and in *Safety instructions for ACS880 multidrive cabinets and modules* (3AUA0000102301 [English]).
- Read the **firmware function-specific warnings and notes** before changing the default settings of the function. For each function, the warnings and notes are given in the section describing the related user-adjustable parameters (chapter *Parameters*).
- Read **task-specific safety instructions** before starting the task. See the section describing the task.

Target audience

This manual is intended for people who operate, commission, set parameters, monitor or troubleshoot regenerative rectifier units and modules. The reader is expected to know the fundamentals of electricity, wiring, electrical components and electrical schematic symbols.

Contents of the manual

The chapters of this manual are briefly described below.

Start-up refers to where the start-up procedure of the regenerative rectifier is described.

Using the control panel provides the basic instructions for use of the control panel.

Program features describes the program features of the control program.

Parameters lists the parameters of the control program.

Additional parameter data contains more information on the parameters.

Fault tracing lists all warning and fault messages including possible causes and corrective actions.

Fieldbus control through a fieldbus adapter describes how the regenerative rectifier unit can be controlled by external devices over a communication network.

Drive-to-drive link describes the communication between drives connected together by the drive-to-drive (D2D) link.

Related documents

See *List of related manuals* on the inside of the front cover.

Terms and abbreviations

Term/abbreviation	Definition
ACS-AP-I	Types of control panel used with ACS880 drives
ACS-AP-W	
AI	Analog input; interface for analog input signals
AO	Analog output; interface for analog output signals
BCU	Type of a control unit used in ACS880 drives that consists of a BCON board built into a metal housing. BCU control unit is used with regenerative rectifier modules.
DC link	DC circuit between regenerative rectifier and inverter
DDCS	Distributed drives communication system; a protocol used in optical fiber communication
DI	Digital input; interface for digital input signals
DIO	Digital input/output; interface that can be used as a digital input or output
EFB	Embedded fieldbus
FAIO-01	Optional analog I/O extension module
FBA	Fieldbus adapter
FIO-01	Optional digital I/O extension module
FIO-11	Optional analog I/O extension module
FCAN-0x	Optional CANopen® adapter
FCNA-0x	Optional ControlNet™ adapter
FDCO-0x	Optional DDCS communication module
FDIO-01	Optional digital I/O extension module
FDNA-0x	Optional DeviceNet™ adapter
FEA-03	Optional I/O extension adapter
FECA-01	Optional EtherCAT® adapter
FENA-11	Optional EtherNet/IP™, Modbus TCP® and PROFINET IO® adapter
FENA-21	Optional dual-port EtherNet/IP, Modbus TCP and PROFINET IO adapter
FEPL-0x	Optional Ethernet POWERLINK adapter
FPBA-0x	Optional PROFIBUS DP® adapter
FSCA-0x	Optional Modbus® adapter
IGBT	Insulated gate bipolar transistor
I/O	Input/Output
ITHD	Total harmonic current distortion
MCB	Main circuit breaker
Parameter	User-adjustable operation instruction to the regenerative rectifier unit, or signal measured or calculated by the regenerative rectifier
PLC	Programmable logic controller
RO	Relay output; interface for a digital output signal. Implemented with a relay.
Regenerative rectifier module	Regenerative rectifier and related components enclosed inside a metal frame or enclosure. Intended for cabinet installation.
Regenerative rectifier unit	Regenerative rectifier modules under control of one control board, and related components. See *Regenerative rectifier module*.
RRU	See *Regenerative rectifier unit*.
STO	Safe torque off
THD	Total harmonic distortion

Cybersecurity disclaimer

This product is designed to be connected to and to communicate information and data via a network interface. It is Customer's sole responsibility to provide and continuously ensure a secure connection between the product and Customer network or any other network (as the case may be). Customer shall establish and maintain any appropriate measures (such as but not limited to the installation of firewalls, application of authentication measures, encryption of data, installation of anti-virus programs, etc) to protect the product, the network, its system and the interface against any kind of security breaches, unauthorized access, interference, intrusion, leakage and/or theft of data or information. ABB and its affiliates are not liable for damages and/or losses related to such security breaches, any unauthorized access, interference, intrusion, leakage and/or theft of data or information.

See also section *User lock* (page *37*).

2

Start-up

The user needs to set the parameter *195.01 Supply voltage* before start-up. See the appropriate hardware manual for the hardware-related tasks to be done at the start-up.

If the regenerative rectifier unit is equipped with an optional fieldbus adapter, the commission engineer must check and tune the related parameters at start-up. See chapter *Fieldbus control through a fieldbus adapter*.

3

Using the control panel

Refer to *ACS-AP-x assistant control panels user's manual* (3AUA0000085685 [English]).

4

Program features

What this chapter contains

This chapter describes the features and I/O interface of the regenerative rectifier control program.

Overview of the control program

ACS880 regenerative rectifier control program controls the regenerative rectifier unit with an IGBT bridge type supply module. The main functions of the control program are:

- control the IGBT bridge,
- control external charging circuit,
- control the main contactor.

In addition, the control program handles temperature, voltage and current protections of the regenerative rectifier.

ACS880 regenerative rectifier is a line-commutated four-quadrant supply converter capable of transferring power to both directions. Voltage ratios of the supply and intermediate DC link define the power flow direction. In other words, regenerative rectifier does not follow any external power or DC voltage references, but the actual power depends on the operating point of the drive.

ACS880 regenerative rectifier operates in two ways: in motor operation and in regenerative operation.

- Motor operation (rectifier operation) means that current flows from the supply network to the DC link through a line-commutated, 6-pulse diode bridge.
- Regenerative operation means that the current flows from the DC link to the supply network through a line-commutated, 6-pulse IGBT bridge, that is synchronized to the frequency of the supply network.

Compared to the actively controlled IGBT supply unit, a lower IGBT switching frequency and switching losses allow the regenerative rectifier to transfer more power through the IGBTs. As a drawback the regenerative rectifier generates more harmonic distortions to the supply network, THD current (ITHD) > 20%. Forming intermediate DC link voltage is more unregulated and load-dependent when using the regenerative rectifier. Disturbances in the supply network voltage cause disturbances to the intermediate DC link voltage.

The following figure shows a simplified main circuit diagram of the regenerative rectifier.

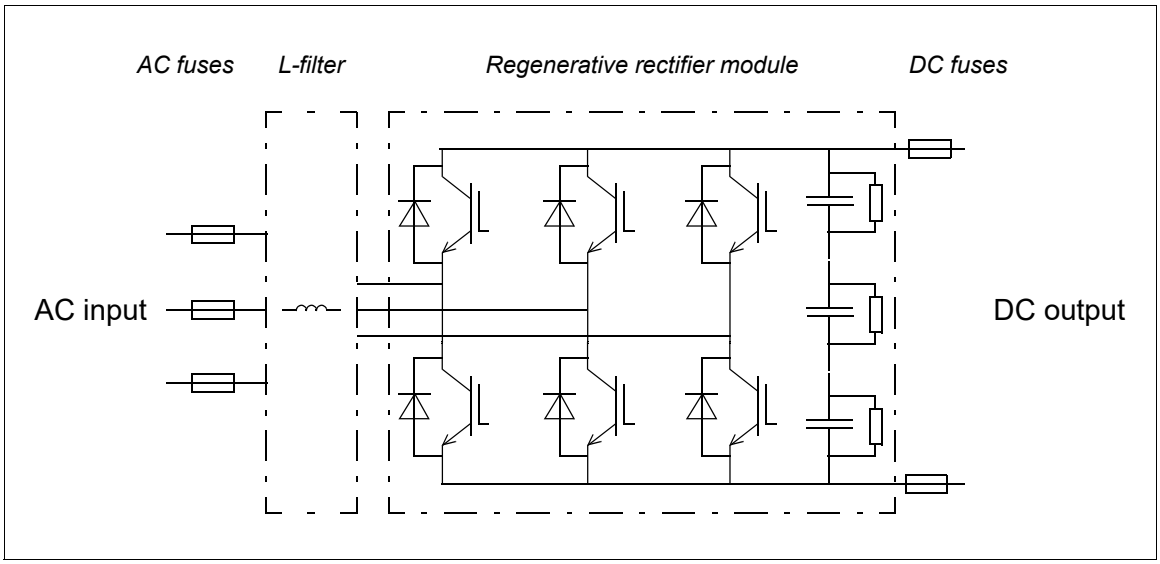

Programming via parameters

Parameters can be set via

- the control panel, as described in chapter *Using the control panel*
- the Drive composer PC tool, or
- the fieldbus interface, as described in chapter *Fieldbus control through a fieldbus adapter*.

All parameter settings are stored automatically to the permanent memory of the regenerative rectifier unit. However, if an internal +24 V DC power supply is used for the control unit, it is highly recommended to force a save by using parameter *196.07 Parameter save manually* before powering down the control unit after any parameter changes.

If necessary, the default parameter values can be restored by parameter *196.06 Parameter restore*.

Adaptive programming

Conventionally, the user can control the operation of the regenerative rectifier unit by parameters. However, the standard parameters have a fixed set of choices or a setting range. To further customize the operation of the regenerative rectifier unit, an adaptive program can be constructed out of a set of function blocks.

The Drive composer PC tool has an Adaptive programming feature with a graphical user interface for building the custom program. The function blocks include the usual arithmetic and logical functions, as well as eg. selection, comparison and timer blocks. The program

can contain a maximum of 20 blocks. The adaptive program is executed on a 10 ms time level.

For selecting input to the program, the user interface has pre-selections for the physical inputs, common actual values, and other status information of the regenerative rectifier unit. Parameter values as well as constants can also be defined as inputs. The output of the program can be used eg. as a start signal, external event or reference, or connected to the drive outputs. Note that connecting the output of the adaptive program to a selection parameter will write-protect the parameter.

The status of the adaptive program is shown by parameter *107.30 Adaptive program status*. The adaptive program can be disabled by *196.70 Disable adaptive program*.

Please note that sequential programming is not supported.

For more information, see the *Adaptive programming application guide* (3AXD50000028574 [English]).

Settings and diagnostics

Parameters: *107.30 Adaptive program status*, *196.70 Disable adaptive program*

Faults: *6E27 Adaptive program*

Control locations for start/stop

Local control vs. external control

The ACS880 has two main control locations: external and local. The control location is selected with the Loc/Rem key on the control panel or in the PC tool.

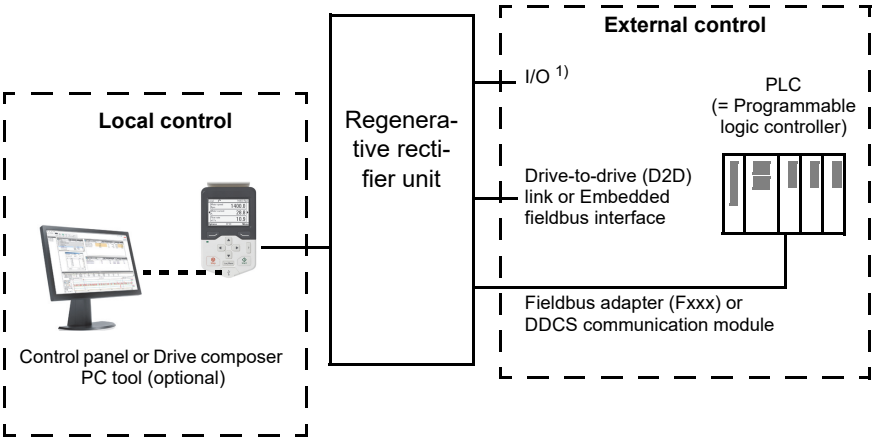

1) Extra inputs/outputs can be added by installing optional I/O extension modules (FIO-xx) in the option slots of the control unit.

External control

When the regenerative rectifier is in external control, start/stop commands are given through the I/O terminals (digital and analog inputs), fieldbus interface (via an optional fieldbus adapter module), or optional I/O extension modules.

Two external control locations, EXT1 and EXT2, are available. The user can select control signals (eg. start and stop) and control modes for both external control locations by parameters *120.01*…*120.09*. Depending on the user selection, either EXT1 or EXT2 is

active at a time. Selection between EXT1/EXT2 is done via any binary source such as a digital input or fieldbus control word (see parameter *119.11 Ext1/Ext2 sel*).

Local control

The start/stop commands are given from the control panel keypad or from a PC equipped with Drive composer when the regenerative rectifier is in local control.

Local control is mainly used during commissioning and maintenance. When switched to local control, the control panel Start and Stop keys override the external Start/Stop source defined for the control program. However, to control the regenerative rectifier on and off by the panel, you must still have the Run enable and Start enable commands on in the control program. See section *Run enable, Start/stop and Start enable control* on page *21*. Changing the control location to local can be disabled by parameter *119.17 Local ctrl disable*.

The user can select by a parameter (*149.05 Communication loss action*) how the regenerative rectifier reacts to a control panel or PC tool communication break.

Run enable, Start/stop and Start enable control

User controls the operation of the regenerative rectifier with the Run enable command, the Start/Stop command and Start enable command. When all commands are on in the control program, the operation starts: First the control program controls the charging circuit on by a relay output. The charging circuit charges the DC capacitors in the DC link of the drive via the charging resistors. When the control program detects that the charging is complete, it controls the main contactor on and the charging contactor off, and the normal operation of the regenerative rectifier starts.

There is a parameter in the control program for defining the value or source for each of the commands. By default, the parameters define the command values or sources as follows:

- Control program reads the Run enable command from digital input DI2.
- Control program reads the Start/Stop command from digital input DI2.
- Start enable is set on constantly.

Typically, DI2 is connected to the operating switch installed on the cabinet door. When the switch is on, the control program receives both the Run enable and Start/Stop commands via DI2.

Note: When you switch the control panel to local control, the control program starts reading the Start/Stop from the panel (Start and Stop keys). The parameter-defined Start/Stop source is not valid until you switch the panel back to remote control. The Loc/Rem key of the panel selects between local and remote control.

WARNING! Do not change the parameter settings related to Run enable, Start/Stop or Start enable unless you are absolutely sure what you are doing. The parameter settings and I/O wirings of the cabinet-installed multidrive, ACS880-907, are done at the factory according to the application requirements.

Settings and diagnostics

Control panel key: Loc/Rem

Parameters: parameter group *119 Operation mode*, *120.01 Ext1 commands*…*120.09 Ext2 in2*, *120.12 Run enable 1*, *120.19 Enable start signal*, *195.01 Supply voltage*

Warnings: *AE61 Overvoltage*, *AE62 Undervoltage*, *AE6B Input phase lost*, *AE69 Synchronization*

Faults: *2E00 Overcurrent*, *2E09 DC short circuit*, *3E05 DC link undervoltage*, *3E06 BU DC link difference*, *3E07 BU voltage difference*, *3E0F Synchronization*, *5E06 Main contactor fault*, *8E00 Overvoltage*

Operating modes

ACS880 regenerative rectifier control program operates in three operating modes. The active operating mode is automatically selected based on the power flow and it is visible in parameter *190.76 RRU status word 1*.

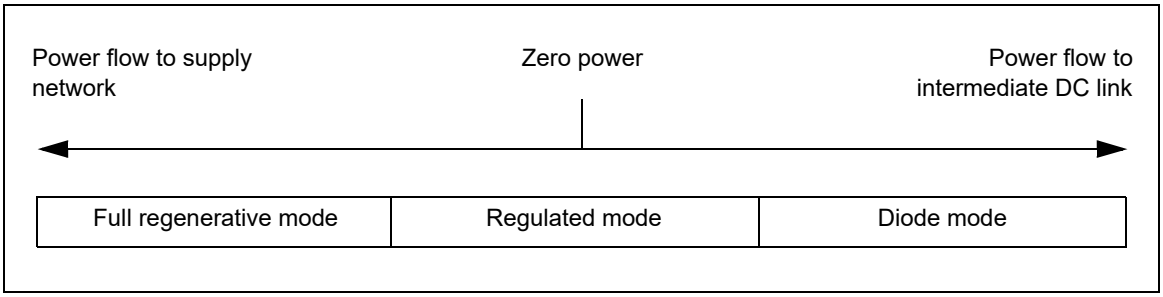

1. Full regenerative mode: When regenerating ability is needed, regenerative rectifier uses long control pulses (over 120 electrical degrees) for the IGBT control. This allows the maximum power flow to the supply network. In this mode the regenerative rectifier also filters most of the voltage commutation notches by overlapping the IGBT control pulses for a certain period of time. This feature is called soft commutation.
2. Regulated mode: When motoring current is needed, the current flows through the diodes as in diode mode. When regenerating ability is needed, the current flow to the supply network is regulated by using shorter IGBT control pulses than in the full regenerative mode. The use of regulated mode near zero power situations reduces reactive current component and losses. Regulated mode also makes the DC voltage more robust during load changes.
3. Diode mode: Regenerative rectifier operates in diode mode when the power is transferred from the supply network to the intermediate DC link. The IGBTs are switched off and all the power flows through the diodes to the intermediate DC link. The user can also force the diode mode into use with parameter *120.29 Diode mode*. If the diode mode is forced into use, the regenerative rectifier is not able to regenerate power to the supply network.

Settings and diagnostics

Parameters: *190.76 RRU status word 1*, *120.29 Diode mode*

Faults: *6E21 RRU software*

Charging

The charging is always needed to power up the DC link capacitors smoothly. In other words: you may not connect the discharged capacitors to full supply voltage but you must increase the voltage gradually until the capacitors are charged and ready for normal use.

The control program has a function for controlling an additional charging circuit in the regenerative rectifier. The charging function is active as standard, since the cabinet-installed ABB drive which uses regenerative rectifier needs the additional charging circuit.

When the control program receives the start command (or On/Off bit in the fieldbus control word) and Run enable and Start enable are on, the control program controls the charging contactor on by a relay output. The contactor connects the input power line to the drive DC link via charging resistors. The DC capacitor charging starts. The DC voltage level in the DC link increases as the charging continues. The charging resistors limit the charging current.

Charging is completed when:

- the actual DC voltage exceeds the predefined level (parameter *120.25*)
- the actual DC voltage change rate is below the predefined level (parameter *120.26*), and
- the pre-defined delay time has passed (parameter *120.27*).

The control program monitors the charging time. If charging takes more time than defined by a parameter, the regenerative rectifier trips to a fault.

User must install the charging circuit, and tune the charging function in the regenerative rectifier control program. Consult ABB for more information on tuning the parameters, and the components and wirings needed.

The control program monitors charging attempts to prevent charging circuit overheating. If there are more than two attempts in five minutes to charge the DC link externally, regenerative rectifier generates an event selected with parameter *120.50 Charging overload event sel*.

Timing diagram

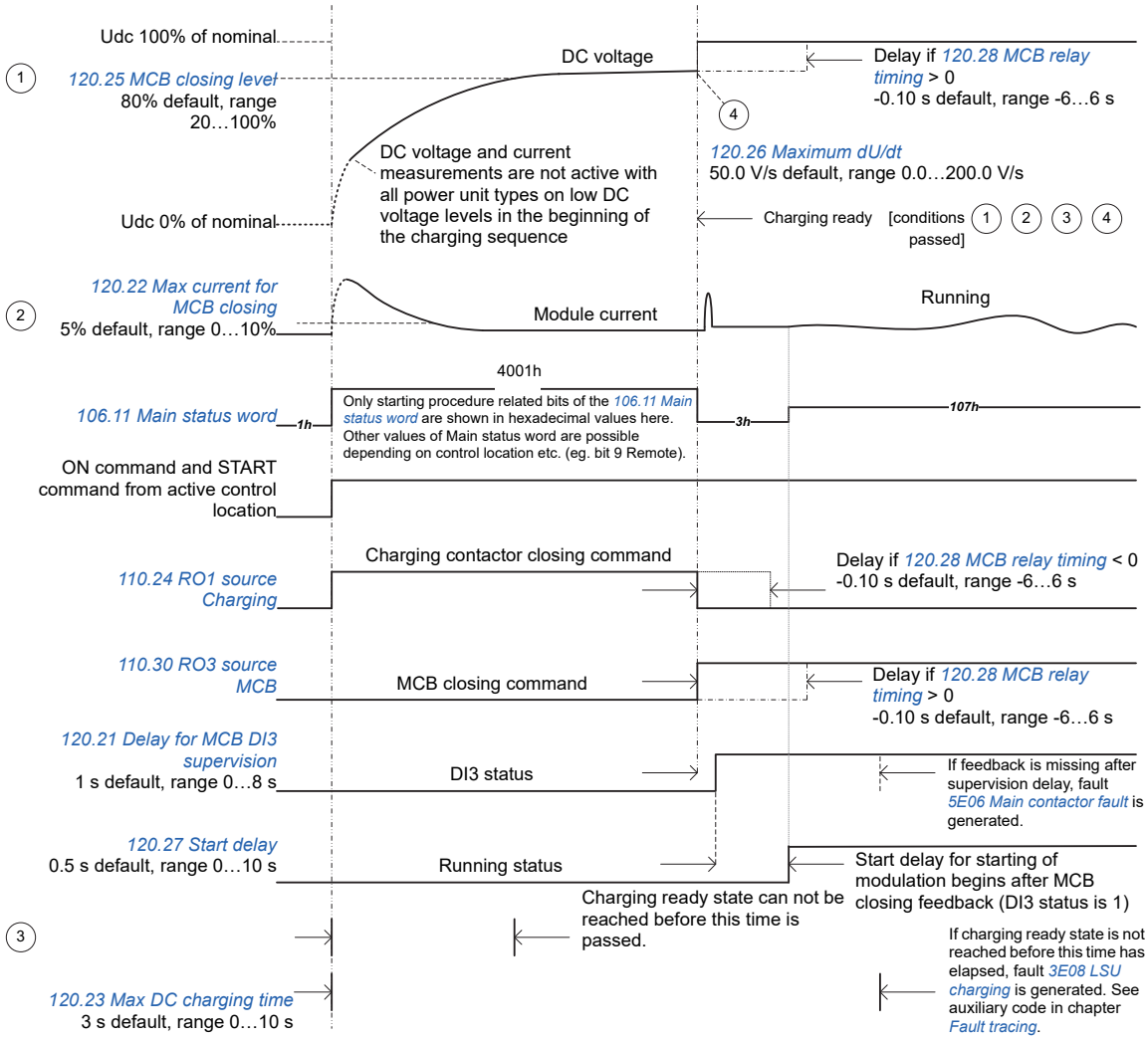

Settings and diagnostics

Parameters: *101.01 DC voltage*, *110.24 RO1 source*, *120.22 Max current for MCB closing*, *120.23 Max DC charging time*, *120.25 MCB closing level*, *120.26 Maximum dU/dt*, *120.27 Start delay*, *120.28 MCB relay timing*, *120.50 Charging overload event sel*

Warnings: *AE85 Charging count*

Faults: *3E08 LSU charging*, *3E09 Charging count*, *5E06 Main contactor fault*

Application programming

Note: This feature is not supported by the current firmware version.

The functions of the firmware program can be extended with application programming. (A standard drive delivery does not include an application program.) Application programs can be built out of function blocks based on the IEC-61131 standard. Some parameters are used as firmware function block inputs and can therefore be modified also via the application program.

Control interfaces

Programmable analog inputs

The control unit has two programmable analog inputs. Each of the inputs can be independently set as a voltage (0/2 … 10 V or -10 … 10 V) or current (0/4 … 20 mA) input by a jumper on the control unit. Each input can be filtered, inverted and scaled. The number of analog inputs can be increased by using FIO-11 or FAIO-01 I/O extensions.

Note: As standard, the control program does not use the analog inputs, and you can not connect them to any use in it. However, there are terminals for two analog inputs, and a parameter group for the signal processing. A special application program can use the analog inputs. There is no application program as standard but the customer can build one himself/herself. See section *Application programming* on page *25* for more information.

Settings and diagnostics

Parameters: parameter group *112 Standard AI*

Warnings: *AE27 AI parametrization*

Programmable analog outputs

The control unit has two current (0 … 20 mA) analog outputs. Each output can be filtered, inverted and scaled. The number of analog outputs can be increased by using FIO-11 or FAIO-01 I/O extensions.

Settings and diagnostics

Parameters: parameter group *113 Standard AO*

Programmable digital inputs and outputs

The control unit has six digital inputs, a digital start interlock input, and two digital input/outputs.

Digital input/output DIO1 can be used as a digital input, relay output or frequency input, DIO2 as a digital input, relay output or frequency output.

The number of digital inputs/outputs can be increased by installing FIO-01, FIO-11 or FDIO-01 I/O extensions (see *Programmable I/O extensions* below).

Note: Do not change the settings of the reserved digital inputs (or outputs, if any). See subsection *Reserved digital inputs and relay outputs* on page *40*.

Settings and diagnostics

Parameters: Parameter groups *110 Standard DI, RO* and *111 Standard DIO, FI, FO*

Programmable relay outputs

The control unit has three relay outputs, and one of them can be programmed by the user (RO2). RO1 is used for charging contactor control, and RO3 is used for main contactor control. The signal to be indicated by the outputs can be selected by parameters. Relay outputs can be added by installing FIO-01 or FDIO-01 I/O extensions.

Note: Do not change the settings of the reserved relay outputs. See subsection *Reserved digital inputs and relay outputs* on page *40*.

Settings and diagnostics

Parameters: parameter group *110 Standard DI, RO*

Programmable I/O extensions

The number of inputs and outputs can be increased by using I/O extension modules. One to three modules can be mounted on the slots of the control unit. Slots can be added by connecting an FEA-03 I/O extension adapter.

The table below shows the possible I/O combinations.

Location	Digital inputs (DI)	Digital I/Os (DIO)	Analog inputs (AI)	Analog outputs (AO)	Relay outputs (RO)
Control unit	7	2	2	2	3
FIO-01	-	4	-	-	2
FIO-11	-	2	3	1	-
FAIO-01	-	-	2	2	-
FDIO-01	3	-	-	-	2

Three I/O extension modules can be activated and configured using parameter groups *114 Extension I/O module 1*…*116 Extension I/O module 3*.

Note: Each configuration parameter group contains parameters that display the values of the inputs on that particular extension module. These parameters are the only way of utilizing the inputs on I/O extension modules as signal sources. To connect to an input, choose the setting Other in the source selector parameter, then specify the appropriate value parameter (and bit, for digital signals) in group 114, 115 or 116.

Settings and diagnostics

Parameters: parameter groups *112 Standard AI*, *114 Extension I/O module 1*, *115 Extension I/O module 2* and *116 Extension I/O module 3*

Warnings: *AE2E Extension AI parametrization*, *AE2F Extension I/O configuration failure*

Faults: *7E00 Option module comm loss*

Fieldbus control

The regenerative rectifier can be connected to an overriding control system via an optional fieldbus adapter. See chapter *Fieldbus control through a fieldbus adapter* (page *185*).

Settings and diagnostics

Parameters: parameter groups *150 FBA*, *151 FBA A settings*, *152 FBA A data in*, *153 FBA A data out*, *154 FBA B settings*, *155 FBA B data in*, *156 FBA B data out*

Warnings: *AE25 FBA A parameter conflict*, *AE26 FBA B parameter conflict*, *AE30 FB A communication*, *AE31 FB B communication*

Faults: *6E01 FBA A mapping file*, *6E02 FBA B mapping file*, *6E0D FBA A parameter conflict*, *6E0E FBA B parameter conflict*, *7E0B FBA A communication*, *7E0C FBA B communication*

External controller interface

General

The regenerative rectifier can be connected to an external controller (such as the ABB AC 800M) using either fiber optic or twisted-pair cable. The ACS880 is compatible with both the ModuleBus and DriveBus connections. Note that some features of DriveBus (such as BusManager) are not supported.

Topology

An example connection with BCU-based unit using fiber optic cables is shown below.

Regenerative rectifiers with a *BCU* control unit require an RDCO or FDCO module. The BCU has a dedicated slot for the RDCO – an FDCO module can also be used with a BCU control unit but it will reserve one of the three universal option module slots. Ring and star configurations are also possible much in the same way as with the master/follower link; the notable difference is that the external controller connects to channel CH0 on the RDCO module instead of CH2. The channel on the FDCO communication module can be freely selected.

T = Transmitter; R = Receiver

The external controller can also be wired to the D2D (RS-485) connector using shielded, twisted-pair cable. The selection of the connection is made by parameter *160.51 DDCS controller comm port*.

Communication

The communication between the controller and the regenerative rectifier consists of data sets of three 16-bit words each. The controller sends a data set to the regenerative rectifier, which returns the next data set to the controller.

The communication uses data sets 10…33. The contents of the data sets are freely configurable, but data set 10 typically contains the control word, while data set 11 returns the status word and selected actual values.

The word that is defined as the control word is internally connected to the logic; the coding of the bits is as presented in section *Contents of the fieldbus Control word* (page *188*). Likewise, the coding of the status word is as shown in section *Contents of the fieldbus Status word* (page *189*).

By default, data sets 32 and 33 are dedicated for the mailbox service, which enables the setting or inquiry of parameter values as follows:

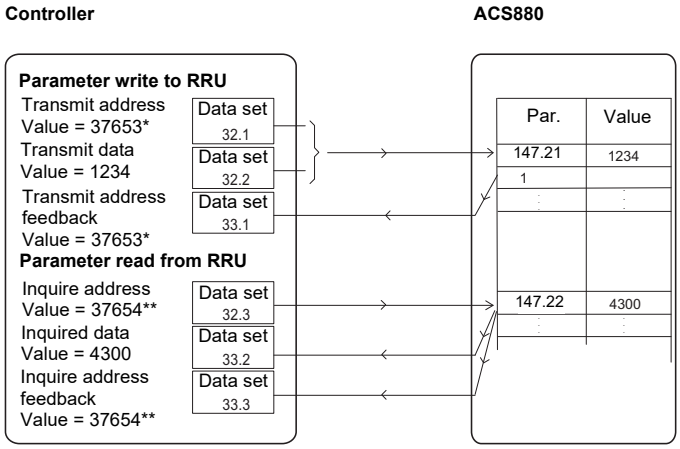

*147.21 -> 93h.15h -> 9315h -> 37653
**147.22 -> 93h.16h -> 9316h -> 37654

By parameter *160.64 Mailbox dataset selection*, data sets 24 and 25 can be selected instead of data sets 32 and 33.

The update intervals of the data sets are as follows:

- Data sets 10…11: 2 ms
- Data sets 12…13: 4 ms
- Data sets 14…17: 10 ms
- Data sets 18…25, 32, 33: 100 ms.

Settings

Parameter groups *160 DDCS communication* (page *118*), *161 DDCS transmit* (page *120*) and *162 DDCS receive* (page *123*).

Data storage parameters

Twenty-four (sixteen 32-bit, eight 16-bit) parameters are reserved for data storage. These parameters are unconnected and can be used for linking, testing and commissioning purposes. They can be written to and read from using other parameters' source or target selections.

Settings

Parameters: parameter group *147 Data storage*

Safety and protections

Programmable protection functions

Emergency stop (parameters *121.04*…*121.05*)

The emergency stop signal is connected to the input selected by parameter *121.05 Emergency stop source*. The mode of the emergency stop is selected by parameter *121.04 Emergency stop mode*.

External events (parameters *131.01*…*131.10*)

An external event signal can be connected to a selectable input. When the signal is lost, an external event (fault, warning, or a mere log entry) is generated.

Local control loss detection (parameter *149.05*)

The parameter selects how the regenerative rectifier reacts to a control panel or PC tool communication break.

External earth leakage fault source selection (parameter *131.28*)

The parameter selects in which digital input or digital input/output external earth leakage fault is connected.

External earth leakage action selection (parameter *131.29*)

The parameter selects how the regenerative rectifier reacts when an external earth leakage is detected.

Fuse trip fault source (parameter *131.38*)

The parameter selects in which digital input or digital input/output fuse trip fault is connected.

Brake chopper fault source (parameter *131.39*)

The parameter selects in which digital input or digital input/output brake chopper fault is connected.

Automatic fault resets

The regenerative rectifier can automatically reset itself after overvoltage, undervoltage and external faults. The user can also specify a fault that is automatically reset.

By default, automatic resets are off and must be specifically activated by the user.

Settings

Parameters: parameters *131.12 Autoreset selection*…*131.16 Delay time*

Temperature supervision

The control program measures semiconductor and module temperatures and handles the temperature protections. In addition thermal switches supervise the temperature inside the regenerative rectifier module. The switches are connected in series and wired to a digital input (DI) of the control unit (1 = OK, 0 = overtemperature). In case of overtemperature, a switch opens and the control program generates first a warning, and then, if the overtemperature indication remains over a pre-defined delay, the regenerative rectifier trips to a fault. The user can adjust the delay time with a parameter *110.06 DI1 OFF delay*.

A temperature sensor integrated into the BCU control unit supervises the ambient temperature of the control board.

Settings and diagnostics

Parameters: *101.31 Ambient temperature*, *105.11 Converter temperature %*, *110.06 DI1 OFF delay*

Warnings: *AE14 Excess temperature*, *AE15 Excess temperature difference AE60 Control board temperature*, *AE6C Semiconductor temperature*

Faults: *4E03 Excess temperature*, *4E04 Excess temperature difference*, *4E06 Cabinet temperature fault*, *4E07 Control board temperature*, *4E08 Semiconductor temperature*

Maintenance timers and counters

The control program has six different maintenance timers or counters that can be configured to generate a warning when a pre-defined limit is reached. The contents of the message can be edited on the control panel by selecting **Settings – Edit texts**.

The timer/counter can be set to monitor any parameter. This feature is especially useful as a service reminder.

There are three types of counters:

- On-time timers. Measures the time a binary source (for example, a bit in a status word) is on.
- Signal edge counters. The counter is incremented whenever the monitored binary source changes state.
- Value counters. The counter calculates its actual value by integrating the monitored value with respect to time. For example, if you monitor the actual power with a value counter, the value counter calculates and displays the cumulative energy. You can also define limits and select indication messages for the counter.

Settings

Parameters: parameter group *133 Generic timer & counter*

Load analyzer

Peak value logger

The user can select a signal to be monitored by a peak value logger. The logger records the peak value of the signal along with the time the peak occurred, as well as line current, DC voltage and power at the time of the peak. The peak value is sampled at 2 ms intervals.

Amplitude loggers

The control program has two amplitude loggers.

For amplitude logger 2, the user can select a signal to be sampled at 200 ms intervals, and specify a value that corresponds to 100%. The collected samples are sorted into 10 read-only parameters according to their amplitude. Each parameter represents an amplitude range 10 percentage points wide, and displays the percentage of the collected samples that have fallen within that range.

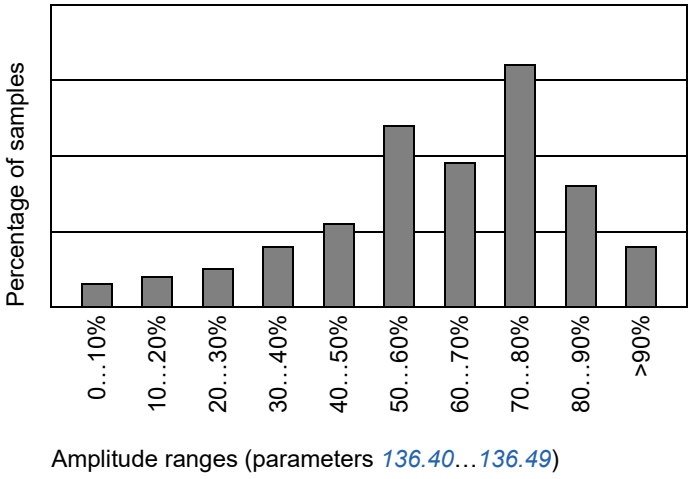

Amplitude logger 1 is fixed to AC current (*101.02 Line current*), and cannot be reset. With amplitude logger 1, 100% corresponds to the maximum current. The measured current is logged continuously. The distribution of samples is shown by parameters *136.20*…*136.29*.

Settings

Parameters: parameter group *136 Load analyzer*

Default I/O connection diagram (BCU)

XD2D		**Drive-to-drive link**
1	B	Drive-to-drive link (not in use by default)
2	A	
3	BGND	
4	Shield	
X485		**RS485 connection**
5	B	Not in use (not in use by default)
6	A	
7	BGND	
8	Shield	
XRO1…XRO3		**Relay outputs**
11	NC	XRO1: **Charging** [1] (Energized = closes charging contactor) 250 V AC / 30 V DC / 2 A
12	COM	
13	NO	
21	NC	XRO2: **Fault(-1)** [2] (Energized = no fault) 250 V AC / 30 V DC / 2 A
22	COM	
23	NO	
31	NC	XRO3: **MCB ctrl** [1] (Energized = closes main contactor/breaker) 250 V AC / 30 V DC / 2 A
32	COM	
33	NO	
XSTO		**XSTO connector**
1	OUT	XSTO connector. Both circuits (power module, control unit) must be closed for the RRU to start. (IN1 and IN2 must be connected to OUT.) [3]
2	SGND	
3	IN1	
4	IN2	
5	IN1	Not in use
6	SGND	
7	IN2	
8	SGND	
XDI		**Digital inputs**
1	DI1	Temp fault [2] (0 = overtemperature)
2	DI2	Run / enable [2] (1 = run / enable)
3	DI3	MCB fb [4] (0 = main contactor/breaker open)
4	DI4	Auxiliary circuit breaker fault [2]
5	DI5	Not in use by default. Can be used for eg. earth fault monitoring.
6	DI6	Reset [2] (0 -> 1 = fault reset)
7	DIIL	Not in use by default. Can be used for eg. emergency stop.
XDIO		**Digital input/outputs**
1	DIO1	Not in use by default
2	DIO2	Not in use by default
3	DIOGND	Digital input/output ground
4	DIOGND	Digital input/output ground
XD24		**Auxiliary voltage output**
5	+24VD	+24 V DC 200 mA [5]
6	DICOM	Digital input ground
7	+24VD	+24 V DC 200 mA [5]
8	DIOGND	Digital input/output ground
DICOM=DIOGND		**Ground selection switch** [6]
XAI		**Analog inputs, reference voltage output**
1	+VREF	10 V DC, R_L 1…10 kohm
2	-VREF	-10 V DC, R_L 1…10 kohm
3	AGND	Ground
4	AI1+	Not in use by default.
5	AI1-	0(2)…10 V, R_{in} > 200 kohm [7]
6	AI2+	Not in use by default
7	AI2-	0(4)…20 mA, R_{in} = 100 ohm [8]
XAO		**Analog outputs**
1	AO1	**Zero** [2] 0…20 mA, R_L < 500 ohm
2	AGND	
3	AO2	**Zero** [2] 0…20 mA, R_L < 500 ohm
4	AGND	
XPOW		**External power input**
1	+24VI	24 V DC, 2.05 A
2	GND	
3	+24VI	
4	GND	
X12		**Safety functions module connection** is not available in RRU
X13		**Control panel connection**
X205		**Memory unit connection**

The table above shows the control connections of the regenerative rectifier unit, and the default meaning or use of the signals in the regenerative rectifier control program.

Wire sizes and tightening torques: 0.5 … 2.5 mm^2 (24…12 AWG) and 0.5 N·m (5 lbf·in) for both stranded and solid wiring.

There are additional fiber optics connections from the BCU control unit to the regenerative rectifier modules.

Notes:

[1)] Use of the signal in the control program. This I/O terminal is reserved in the control program, and parameters *110.24 RO1 source* and *110.30 RO3 source* are write-protected.

[2)] Default use of the signal in the control program. The use can be changed by a parameter. For the delivery-specific use, see the delivery-specific circuit diagrams.

[3)] This input only acts as a true Safe torque off input in inverter control units. In other applications (such as a rectifier unit), de-energizing the IN1 and/or IN2 terminal will stop the unit but not constitute a true safety function.

[4)] Use of the signal in the control program. The use is fixed and it cannot be changed by a parameter.

[5)] Total load capacity of these outputs is 4.8 W (200 mA at 24 V) minus the power taken by DIO1 and DIO2.

[6)] Determines whether DICOM is separated from DIOGND (ie. common reference for digital inputs floats). **DICOM = DIOGND** ON: DICOM connected to DIOGND. OFF: DICOM and DIOGND separate.

[7)] Current [0(4)…20 mA, R_{in} = 100 ohm] or voltage [0(2)…10 V, R_{in} > 200 kohm] input selected by switch AI1. Change of setting requires reboot of control unit.

[8)] Current [0(4)…20 mA, R_{in} = 100 ohm] or voltage [0(2)…10 V, R_{in} > 200 kohm] input selected by switch AI2. Change of setting requires reboot of control unit.

Parameters that define the use of relay outputs

The table below shows the relay outputs and the parameters and that define their use by default.

Output	Parameter	Default value
RO1	*110.24 RO1 source*	*Charging*
RO2	*110.27 RO2 source*	*Fault (-1)*
RO3	*110.30 RO3 source*	*MCB*

Parameters that define the use of digital inputs

The table below shows the default use of digital inputs by parameters.

Input	Parameter	Additional information
DI1	*131.33 Cabinet temperature fault source*	0 = overtemperature Typically this is used for monitoring the status of cabinet temperature fault.
DI2	*120.12 Run enable 1* *120.03 Ext1 in1*	1 = run enable 1 = on
DI4	*131.32 Aux circuit breaker fault source*	0 = auxiliary circuit breaker or switch open Typically this is used for monitoring the status of auxiliary circuit breaker.
DI6	*131.11 Fault reset selection*	0 -> 1 = fault reset

The table below shows the common use of the remaining digital inputs in the cabinet installed drives by ABB. Note that these are no default parameters settings in the control program.

Input	Parameter	Additional information
DI5	*131.28 Ext earth leakage signal source*	0 = earth leakage current monitoring tripped
DIIL	*121.05 Emergency stop source*	0 = emergency stop active

For the rest of the parameters that can use digital inputs as signal source, see chapter *Parameters*.

Reduced run function

Reduced run function is available for regenerative rectifier units consisting of parallel-connected regenerative rectifier modules of frame size R8i. The function makes it possible to continue operation with limited current even if one (or more) module is out of service, for example, because of maintenance work. In principle, reduced run is possible with only one module, but in practice, the modules in service must be able to provide enough current for running the inverter modules.

The number of removed regenerative rectifier modules and L-filter modules is restricted. For example, 4×R8i unit consist of two 2×R8i + 1×BL sets. When one rectifier unit fails, whole set of 2×R8i + 1×BL is first removed as shown below:

4×R8i + 2×BL -> 2×R8i + 1×BL -> 1×R8i + 1×BL.

The following table lists the allowed configurations.

Original configuration	Allowed configurations when using reduced run function
2×R8i + 1×BL	1×R8i + 1×BL
4×R8i + 2×BL	2×R8i + 1×BL or 1×R8i + 1×BL
6×R8i + 3×BL	4×R8i + 2×BL or 2×R8i + 1×BL or 1×R8i + 1×BL

In case of parallel-connected regenerative rectifier units (2×ACS880-90x, see section *Parallel-connected regenerative rectifier units* on page *37*), the same number of power modules must be removed from both units. For one unit, see the allowed configurations in the table above.

Note: When regenerative rectifier modules and L-filter modules are removed, the corresponding AC fuses need to be removed too.

Activation of the reduced run function

Note: For cabinet-built drives, the wiring accessories and the air baffle needed during the procedure are available from ABB, and are included in the delivery.

WARNING! Follow the safety instructions provided for the regenerative rectifier unit in question.

1. Disconnect the supply voltage and all other sources that can supply the DC bus (eg. DC/DC converter) from the regenerative rectifier unit.
2. If the control unit of the regenerative rectifier unit is powered from the faulty module, install an extension to the wiring and connect it to one of the remaining modules.
3. Remove the module to be serviced from its bay. See the appropriate hardware manual for instructions.
4. Install an air baffle to the top module guide to block the airflow through the empty module bay.
5. Switch on the power to the regenerative rectifier unit.
6. Enter the number of regenerative rectifier modules present into parameter *195.13 Reduced run mode*.
7. Reset all faults and start the regenerative rectifier unit. The maximum current is now automatically limited according to the new configuration. A mismatch between the number of detected modules and the value set in *195.13* will generate a fault (*5E0E Reduced run*).

After all modules have been reinstalled, parameter *195.13 Reduced run mode* must be reset to 0 to disable the reduced run function.

Settings and diagnostics

Parameters: *195.13 Reduced run mode*, *195.14 Connected modules*

Faults: *5E0E Reduced run*

User lock

For better cybersecurity, it is highly recommended that you set a master pass code to prevent eg. the changing of parameter values and/or the loading of firmware and other files.

WARNING! ABB will not be liable for damages or losses caused by the failure to activate the user lock using a new pass code. See *Cybersecurity disclaimer* (page *12*).

To activate the user lock for the first time, enter the default pass code, 10000000, into *196.02 Pass code*. This will make parameters *196.100*…*196.102* visible. Then enter a new pass code into *196.100 Change user pass code*, and confirm the code in *196.101 Confirm user pass code*. In *196.102 User lock functionality*, define the actions that you want to prevent (we recommend you select all the actions unless otherwise required by the application).

To close the user lock, enter an invalid pass code into *196.02 Pass code*, activate *196.08 Control board boot*, or cycle the power. With the lock closed, parameters *196.100*…*196.102* are hidden.

To reopen the lock, enter your pass code into *196.02 Pass code*. This will again make parameters *196.100*…*196.102* visible.

Settings

Parameters *196.02* (page *131*) and *196.100*…*196.102* (page *134*).

Parallel-connected regenerative rectifier units

Two regenerative rectifier units can be connected in parallel. Each unit is connected to a 2-winding transformer of its own, or both parallel-connected units are connected to a common 3-winding transformer. There must be a 30-degree phase shift between the secondary windings (one secondary winding in delta and the other in star connection). A single BCU control unit controls both units. Parallel-connected unit type is selected with parameters *195.30 Parallel type list filter* and *195.31 Parallel type configuration*.

Redundant operation (where the other regenerative rectifier unit is disabled in a parallel-connection) can be activated with parameter *119.03 Parallel converter mode*. In redundant mode the control program will only control the other of the two regenerative rectifier units.

If both regenerative rectifier units use different digital inputs for the main circuit breaker feedback monitoring function, the source of the second feedback can be selected with parameter *120.20 MCB2 feedback source*.

See also *Parallel-connected ACS880-907 regenerative rectifier units system description* (3AXD50000036609 [English]).

Settings

Parameters *119.03 Parallel converter mode* (page *87*), *120.20 MCB2 feedback source* (page *91*), *195.30 Parallel type list filter* (page *130*), *195.31 Parallel type configuration* (page *131*), and parameter group *192 Additional actual values 2*.

5

Parameters

What this chapter contains

The chapter describes the parameters, including actual signals, of the control program.

Terms and abbreviations

Term	Definition
Actual signal	Type of parameter that is the result of a measurement or calculation by the regenerative rectifier unit, or contains status information.
Def	(In the following table, shown on the same row as the parameter name.) Default value of a parameter for the Factory macro.
FbEq16	(In the following table, shown on the same row as the parameter range, or for each selection.) 16-bit fieldbus equivalent. Scaling between the value shown on the panel and the integer used in fieldbus communication when a 16-bit value is selected for transmission to an external system. Dash (-) indicates that the parameter is not accessible in 16-bit format. Corresponding 32-bit scalings are listed in chapter *Additional parameter data* (page *137*).
Other	Value is taken from a specific bit in another parameter. The source is selected from a parameter list.
Parameter	Either an user-adjustable operating instruction for the regenerative rectifier unit, or an actual signal.
p.u.	Per unit

Reserved digital inputs and relay outputs

Do not change the settings of the reserved digital inputs or relay outputs. For the cabinet-installed multidrive, ACS880-907, digital inputs and relay outputs are typically defined in use and connected to the appropriate control circuits already at the factory. See the delivery-specific circuit diagrams and subsection *Default I/O connection diagram (BCU)* on page *33*.

Summary of parameter groups

Group	Contents	Page
101 Actual values	Basic signals for monitoring of the regenerative rectifier unit.	*42*
104 Warnings and faults	Information on warnings and faults that occurred last.	*43*
105 Diagnostics	Measurements related to regenerative rectifier unit maintenance.	*44*
106 Control and status words	Control and status words.	*45*
107 System info	Hardware and firmware information.	*51*
110 Standard DI, RO	Configuration of digital inputs and relay outputs.	*51*
111 Standard DIO, FI, FO	Configuration of digital input/outputs and frequency inputs/outputs.	*56*
112 Standard AI	Configuration of analog inputs.	*59*
113 Standard AO	Configuration of analog outputs.	*61*
114 Extension I/O module 1	Configuration of I/O extension module 1.	*64*
115 Extension I/O module 2	Configuration of I/O extension module 2.	*80*
116 Extension I/O module 3	Configuration of I/O extension module 3.	*83*
119 Operation mode	Selection of external control location sources and operating modes.	*87*
120 Start/stop	Start/stop and run/start enable signal source selection; charging settings.	*88*
121 Start/stop mode	Start and stop modes; emergency stop mode and signal source selection.	*93*
131 Fault functions	Settings that define the behavior of the unit upon fault situations.	*94*
133 Generic timer & counter	Configuration of maintenance timers/counters.	*100*
136 Load analyzer	Peak value and amplitude logger settings.	*106*
147 Data storage	Parameters that can be written to and read from by using source and target settings of other parameters.	*109*
149 Panel port communication	Communication settings for the control panel port on the regenerative rectifier.	*110*
150 FBA	Fieldbus communication configuration.	*111*
151 FBA A settings	Fieldbus adapter A configuration.	*114*
152 FBA A data in	Selection of data to be transferred from regenerative rectifier to fieldbus controller through fieldbus adapter A.	*116*
153 FBA A data out	Selection of data to be transferred from fieldbus controller to regenerative rectifier unit through fieldbus adapter A.	*116*
154 FBA B settings	Fieldbus adapter B configuration.	*116*
155 FBA B data in	Selection of data to be transferred from regenerative rectifier unit to fieldbus controller through fieldbus adapter B.	*118*
156 FBA B data out	Selection of data to be transferred from fieldbus controller to regenerative rectifier unit through fieldbus adapter B.	*118*
160 DDCS communication	DDCS communication settings.	*118*
161 DDCS transmit	Defines the data sent to the DDCS link.	*120*
162 DDCS receive	Mapping of data received through the DDCS link.	*123*
190 Additional actual values	Additional actual values of 6-pulse regenerative rectifier bridge.	*126*
192 Additional actual values 2	Additional actual values of the second regenerative rectifier unit in the parallel-connected 2×RRU line-up.	*128*

Group	Contents	Page
195 HW configuration	Various hardware-related settings.	*129*
196 System	Language selection; pass code; parameter save and restore; control unit reboot; user lock.	*131*

Parameter listing

WARNING! Do not change any parameter settings unless you are absolutely sure what you are doing. The parameter settings and I/O wirings of the cabinet-installed multidrive, ACS880-907, are done at the factory according to the application requirements.

No.	Name/Value	Description	Def/FbEq16
101 Actual values		Basic signals for monitoring of the regenerative rectifier unit.	
101.01	*DC voltage*	Measured intermediate circuit voltage [V].	-
	0.00…2000.00 V	Intermediate circuit voltage.	1 = 1 V
101.02	*Line current*	Average rms value of phase currents [A].	-
	0.00…30000.00 A	Phase current.	1 = 1 A
101.03	*Line current %*	Average rms value of phase currents [%].	-
	0.0…1000.0%	Phase current in percent of nominal current.	1 = 1%
101.08	*Frequency*	Grid frequency [Hz].	-
	0.00…100.00 Hz	Grid frequency.	100 = 1 Hz
101.09	*Grid voltage*	Average rms value of grid main voltages [V].	-
	0.00…2000.00 V	Grid main voltage.	1 = 1 V
101.12	*Power*	Power [kW].	-
	-30000.00… 30000.00 kW	Power.	1 = 1 kW
101.13	*Power %*	Power in percent of nominal [%].	-
	-1000.0…1000.0%	Power in percent of nominal.	1 = 1 %
101.22	*kWh supply*	Counts the net kWh. Motoring side minus generating side.	-
	-1000…1000 kWh	kWh value.	10 = 1 kWh
101.23	*MWh supply*	Counts the net MWh. Motoring side minus generating side.	-
	-1000…1000 MWh	MWh value.	1 = 1 MWh
101.24	*GWh supply*	Counts the net GWh. Motoring side minus generating side.	-
	-32768… 32767 GWh	GWh value.	1 = 1 GWh
101.25	*kWh motoring*	Counts kWh for motoring side.	-
	0…1000 kWh	kWh value.	10 = 1 kWh
101.26	*MWh motoring*	Counts MWh for motoring side.	-
	0…1000 MWh	MWh value.	1 = 1 MWh
101.27	*GWh motoring*	Counts the motoring side GWh.	-
	0…32767 GWh	GWh value.	1 = 1 GWh
101.28	*kWh generating*	Counts kWh for generating side.	-
	0…1000 kWh	kWh value.	10 = 1 kWh
101.29	*MWh generating*	Counts MWh for generating side.	-
	0…1000 MWh	MWh value.	1 = 1 MWh
101.30	*GWh generating*	Counts the generating side GWh.	-
	0…32767 GWh	GWh value.	1 = 1 GWh
101.31	*Ambient temperature*	Temperature of module incoming air [°C].	-
	-30000.0… 30000.0 °C	Ambient temperature.	1 = 1 °C
101.61	*Nominal supply voltage*	Nominal supply voltage of the regenerative rectifier [V].	-
	0…2000 V	Nominal supply voltage.	1 = 1 V

No.	Name/Value	Description	Def/FbEq16
101.62	*Nominal DC voltage*	Nominal DC voltage of the regenerative rectifier [V].	-
	0…2000 V	Nominal DC voltage.	1 = 1 V
101.63	*Nominal current*	Nominal current from the regenerative rectifier modules before the L-filter [A].	-
	0…30000 A	Nominal current.	1 = 1 A
101.64	*Nominal power*	Nominal power of the regenerative rectifier [V].	-
	0…30000 kW	Nominal power.	1 = 1 kW
101.70	*Ambient temperature percent*	Ambient temperature of the regenerative rectifier in percent. 0…100% corresponds to 0…60 °C or 32…140 °F. See also *101.31 Ambient temperature*.	-
	-200.00…200.00%	Ambient temperature in percent.	1 = 1%

104 Warnings and faults		Information on warnings and faults that occurred last. For explanations of individual warning and fault codes, see chapter *Fault tracing*.	
104.01	*Tripping fault*	Code of the 1st active fault (the fault that caused the current trip).	-
	0000h…FFFFh	1st active fault.	1 = 1
104.02	*Active fault 2*	Code of the 2nd active fault.	-
	0000h…FFFFh	2nd active fault.	1 = 1
104.03	*Active fault 3*	Code of the 3rd active fault.	-
	0000h…FFFFh	3rd active fault.	1 = 1
104.04	*Active fault 4*	Code of the 4th active fault.	-
	0000h…FFFFh	4th active fault.	1 = 1
104.05	*Active fault 5*	Code of the 5th active fault.	-
	0000h…FFFFh	5th active fault.	1 = 1
104.06	*Active warning 1*	Code of the 1st active warning.	-
	0000h…FFFFh	1st active warning.	1 = 1
104.07	*Active warning 2*	Code of the 2nd active warning.	-
	0000h…FFFFh	2nd active warning.	1 = 1
104.08	*Active warning 3*	Code of the 3rd active warning.	-
	0000h…FFFFh	3rd active warning.	1 = 1
104.09	*Active warning 4*	Code of the 4th active warning.	-
	0000h…FFFFh	4th active warning.	1 = 1
104.10	*Active warning 5*	Code of the 5th active warning.	-
	0000h…FFFFh	5th active warning.	1 = 1
104.11	*Latest fault*	Code of the 1st stored fault.	-
	0000h…FFFFh	1st stored fault.	1 = 1
104.12	*2nd latest fault*	Code of the 2nd stored fault.	-
	0000h…FFFFh	2nd stored fault.	1 = 1
104.13	*3rd latest fault*	Code of the 3rd stored fault.	-
	0000h…FFFFh	3rd stored fault.	1 = 1
104.14	*4th latest fault*	Code of the 4th stored fault.	-
	0000h…FFFFh	4th stored fault.	1 = 1

No.	Name/Value	Description	Def/FbEq16
104.15	*5th latest fault*	Code of the 5th stored fault.	-
	0000h…FFFFh	5th stored fault.	1 = 1
104.16	*Latest warning*	Code of the 1st stored warning.	-
	0000h…FFFFh	1st stored warning.	1 = 1
104.17	*2nd latest warning*	Code of the 2nd stored warning.	-
	0000h…FFFFh	2nd stored warning.	1 = 1
104.18	*3rd latest warning*	Code of the 3rd stored warning.	-
	0000h…FFFFh	3rd stored warning.	1 = 1
104.19	*4th latest warning*	Code of the 4th stored warning.	-
	0000h…FFFFh	4th stored warning.	1 = 1
104.20	*5th latest warning*	Code of the 5th stored warning.	-
	0000h…FFFFh	5th stored warning.	1 = 1

105 Diagnostics		Measurements related to regenerative rectifier unit maintenance.	
105.01	*On-time counter*	On-time counter. The counter runs when the regenerative rectifier unit is powered.	-
	0…65535 d	On-time counter.	1 = 1 d
105.02	*Run-time counter*	Run-time counter. The counter runs when the regenerative rectifier unit is running and has closed the main circuit breaker.	-
	0…65535 d	Run-time counter.	1 = 1 d
105.04	*Main fan on-time counter*	Running time of the cooling fan. Can be reset on the control panel by keeping Reset depressed for over 3 seconds.	-
	0…65535 d	Cooling fan run-time counter.	1 = 1 d
105.09	*Time from power-up*	500-microsecond ticks elapsed since the last boot of the control unit.	-
	0…4294967295	500-microsecond ticks since last boot.	1 = 1
105.11	*Converter temperature %*	Converter semiconductor temperature in percent of the fault limit.	-
	-40.0 … 160.0%	Converter temperature.	1 = 1%
105.21	*MCB closing time counter*	Calculates main circuit breaker (MCB) closing times for maintenance purposes. Depending on application, the maintenance time may vary. Follow the instructions for maximum closing time for main circuit breaker in the regenerative rectifier.	-
	-	Main circuit breaker closing time counter.	-

No.	Name/Value	Description	Def/FbEq16
106 Control and status words		Control and status words.	
106.01	*Main control word*	The main control word of the regenerative rectifier unit. This parameter shows the control signals as received from the selected sources (such as digital inputs, the fieldbus interfaces, etc.). This parameter is read-only. The bit assignments are shown in the table below. For detailed bit descriptions, see page *188*. **Bit** / **Name** 0 ON/OFF 1 Off2 control 2 Off3 control 3 Start 4 - 5 - 6 - 7 Reset 8 - 9 - 10 Remote cmd 11 Ext ctrl loc 12 User bit 0 13 User bit 1 14 User bit 2 15 User bit 3	-
	0000h…FFFFh	Main control word.	1 = 1
106.03	*FBA A transparent control word*	The unaltered control word received from the PLC through fieldbus adapter A. This parameter is read-only.	-
	00000000h … FFFFFFFFh	Control word received through fieldbus adapter A.	-
106.04	*FBA B transparent control word*	The unaltered control word received from the PLC through fieldbus adapter B. This parameter is read-only.	-
	00000000h … FFFFFFFFh	Control word received through fieldbus adapter B.	1 = 1

<table>
<tr><th>No.</th><th>Name/Value</th><th>Description</th><th>Def/FbEq16</th></tr>
<tr><td>106.11</td><td>Main status word</td><td>Regenerative rectifier status word sent to fieldbus master station. Reflects the status of the regenerative rectifier irrespective of control source eg. a fieldbus system, control panel (keypad), PC tool, standard I/O, application program or sequence programming, and irrespective of actual control profile which is used to control the regenerative rectifier.
This parameter is read-only.
The bit assignments are shown in the table below. For detailed bit descriptions, see page 189.
<table>
<tr><th>Bit</th><th>Name</th></tr>
<tr><td>0</td><td>Ready to switch ON</td></tr>
<tr><td>1</td><td>Ready run</td></tr>
<tr><td>2</td><td>Ready ref</td></tr>
<tr><td>3</td><td>Tripped</td></tr>
<tr><td>4</td><td>-</td></tr>
<tr><td>5</td><td>-</td></tr>
<tr><td>6</td><td>-</td></tr>
<tr><td>7</td><td>Warning</td></tr>
<tr><td>8</td><td>Operating</td></tr>
<tr><td>9</td><td>Remote</td></tr>
<tr><td>10</td><td>Ready for load</td></tr>
<tr><td>11</td><td>User bit 0</td></tr>
<tr><td>12</td><td>User bit 1</td></tr>
<tr><td>13</td><td>User bit 2</td></tr>
<tr><td>14</td><td>Charging</td></tr>
<tr><td>15</td><td>User bit 3</td></tr>
</table></td><td>-</td></tr>
<tr><td></td><td>0000h…FFFFh</td><td>Main status word.</td><td>1 = 1</td></tr>
<tr><td>106.16</td><td>Drive status word 1</td><td>Status of the regenerative rectifier control logic.
This parameter is read-only.
<table>
<tr><th>Bit</th><th>Name</th><th>Description</th></tr>
<tr><td>0</td><td>Enabled</td><td>1 = Run enable and start enable signals are present</td></tr>
<tr><td>1</td><td>Inhibited</td><td>1 = Start inhibited</td></tr>
<tr><td>2</td><td colspan="2">Reserved</td></tr>
<tr><td>3</td><td colspan="2">Reserved</td></tr>
<tr><td>4</td><td colspan="2">Reserved</td></tr>
<tr><td>5</td><td>Started</td><td>1 = RRU has been started</td></tr>
<tr><td>6</td><td colspan="2">Reserved</td></tr>
<tr><td>7</td><td colspan="2">Reserved</td></tr>
<tr><td>8</td><td>Local control</td><td>1 = RRU is in local control</td></tr>
<tr><td>9</td><td>Network control</td><td>1 = RRU is in network control</td></tr>
<tr><td>10</td><td>Ext1 active</td><td>1 = Control location Ext1 active</td></tr>
<tr><td>11</td><td>Ext2 active</td><td>1 = Control location Ext2 active</td></tr>
<tr><td>12</td><td>Charging</td><td>1 = Charging relay is closed</td></tr>
<tr><td>13</td><td>MCB</td><td>1 = MCB relay is closed</td></tr>
<tr><td>14…15</td><td colspan="2">Reserved</td></tr>
</table></td><td>-</td></tr>
<tr><td></td><td>0000h…FFFFh</td><td>Main status word.</td><td>1 = 1</td></tr>
</table>

No.	Name/Value	Description	Def/FbEq16
106.17	*Drive status word 2*	Drive status word 2. This parameter is read-only.	-

Bit	Name	Description
0	Reserved	
1	Supply phase order UVW	Phase order UVW is detected and the grid is rotating on expected direction.
2	Supply phase order UWV	Phase order UWV is detected and the grid is rotating on unexpected direction.
3	Reserved	
4	Reserved	
5	Reserved	
6	Reserved	
7	Reserved	
8	Reserved	
9	Reserved	
10	Reserved	
11	Reserved	
12	Reduced run	1 = Reduced run active (see section *Reduced run function* on page *35*)
13…15	Reserved	

	0000h…FFFFh	Drive status word 2.	1 = 1
106.18	*Start inhibit status word*	Start inhibit status word.	-

Bit	Name
0	Not ready run
1	Ctrl location changed
2	SSW inhibit
3	Fault
4	Lost start enable
5	Lost run enable
6	Reserved
7	Reserved
8	Reserved
9	Charging overload
10	Reserved
11	Reserved
12	Em Off2
13	Em Off3
14	Auto reset inhibit
15	Reserved

	0000h…FFFFh	Start inhibit status word.	1 = 1

No.	Name/Value	Description	Def/FbEq16
106.25	Drive inhibit status word 2	Drive inhibit status word 2. This word specifies the source of the inhibiting signal that is preventing the unit from starting. See also parameters 106.18 Start inhibit status word, and 106.16 Drive status word 1, bit 1. This parameter is read-only.	-

Bit	Name	Description
0	Follower drive	1 = A follower is preventing the master from starting.
1	Application	1 = The application program is preventing the drive from starting.
2	Aux. power failure	1 = A control unit auxiliary power failure is preventing the drive from starting.
3	Reserved	
4	Ref source parametrization	1 = A reference source parametrization conflict is preventing the drive from starting.
5…15	Reserved	

	0000h…FFFFh	Drive inhibit status word 2.	1 = 1
106.30	MSW bit 11 sel	Selects a binary source whose status is transmitted as bit 11 of 106.11 Main status word.	Ext ctrl loc
	False	0.	1
	True	1.	2
	Ext ctrl loc	External control location selected.	3
	Other	A specific bit in another parameter.	4
106.31	MSW bit 12 sel	Selects a binary source whose status is transmitted as bit 12 of 106.11 Main status word.	False
	False	0.	1
	True	1.	2
	Other	A specific bit in another parameter.	3
106.32	MSW bit 13 sel	Selects a binary source whose status is transmitted as bit 13 of 106.11 Main status word.	False
	False	0.	1
	True	1.	2
	Other	A specific bit in another parameter.	3
106.33	MSW bit 15 sel	Selects a binary source whose status is transmitted as bit 15 of 106.11 Main status word.	False
	False	0.	1
	True	1.	2
	Other	A specific bit in another parameter.	3

No.	Name/Value	Description	Def/FbEq16
106.50	*User status word1*	User status word 1.	

Bit	Name	Description
0	User status bit 0	See *106.60 User status word 1 bit 0 sel*.
1	User status bit 1	See *106.61 User status word 1 bit 1 sel*.
2	User status bit 2	See *106.62 User status word 1 bit 2 sel*.
3	User status bit 3	See *106.63 User status word 1 bit 3 sel*.
4	User status bit 4	See *106.64 User status word 1 bit 4 sel*.
5	User status bit 5	See *106.65 User status word 1 bit 5 sel*.
6	User status bit 6	See *106.66 User status word 1 bit 6 sel*.
7	User status bit 7	See *106.67 User status word 1 bit 7 sel*.
8	User status bit 8	See *106.68 User status word 1 bit 8 sel*.
9	User status bit 9	See *106.69 User status word 1 bit 9 sel*.
10	User status bit 10	See *106.70 User status word 1 bit 10 sel*.
11	User status bit 11	See *106.71 User status word 1 bit 11 sel*.
12	User status bit 12	See *106.72 User status word 1 bit 12 sel*.
13	User status bit 13	See *106.73 User status word 1 bit 13 sel*.
14	User status bit 14	See *106.74 User status word 1 bit 14 sel*.
15	User status bit 15	See *106.75 User status word 1 bit 15 sel*.

	0000h…FFFFh	User-defined status word.	1 = 1
106.60	*User status word 1 bit 0 sel*	Selects a binary source whose status is transmitted as bit 0 of *106.50 User status word1*.	*False*
	False	0.	1
	True	1.	2
	Other	A specific bit in another parameter.	3
106.61	*User status word 1 bit 1 sel*	Selects a binary source whose status is transmitted as bit 1 of *106.50 User status word1*.	*False*
	False	0.	1
	True	1.	2
	Other	A specific bit in another parameter.	3
106.62	*User status word 1 bit 2 sel*	Selects a binary source whose status is transmitted as bit 2 of *106.50 User status word1*.	*False*
	False	0.	1
	True	1.	2
	Other	A specific bit in another parameter.	3
106.63	*User status word 1 bit 3 sel*	Selects a binary source whose status is transmitted as bit 3 of *106.50 User status word1*.	*False*
	False	0.	1
	True	1.	2
	Other	A specific bit in another parameter.	3
106.64	*User status word 1 bit 4 sel*	Selects a binary source whose status is transmitted as bit 4 of *106.50 User status word1*.	*False*
	False	0.	1
	True	1.	2
	Other	A specific bit in another parameter.	3
106.65	*User status word 1 bit 5 sel*	Selects a binary source whose status is transmitted as bit 5 of *106.50 User status word1*.	*False*
	False	0.	1
	True	1.	2
	Other	A specific bit in another parameter.	3

No.	Name/Value	Description	Def/FbEq16
106.66	*User status word 1 bit 6 sel*	Selects a binary source whose status is transmitted as bit 6 of *106.50 User status word1*.	*False*
	False	0.	1
	True	1.	2
	Other	A specific bit in another parameter.	3
106.67	*User status word 1 bit 7 sel*	Selects a binary source whose status is transmitted as bit 7 of *106.50 User status word1*.	*False*
	False	0.	1
	True	1.	2
	Other	A specific bit in another parameter.	3
106.68	*User status word 1 bit 8 sel*	Selects a binary source whose status is transmitted as bit 8 of *106.50 User status word1*.	*False*
	False	0.	1
	True	1.	2
	Other	A specific bit in another parameter.	3
106.69	*User status word 1 bit 9 sel*	Selects a binary source whose status is transmitted as bit 9 of *106.50 User status word1*.	*False*
	False	0.	1
	True	1.	2
	Other	A specific bit in another parameter.	3
106.70	*User status word 1 bit 10 sel*	Selects a binary source whose status is transmitted as bit 10 of *106.50 User status word1*.	*False*
	False	0.	1
	True	1.	2
	Other	A specific bit in another parameter.	3
106.71	*User status word 1 bit 11 sel*	Selects a binary source whose status is transmitted as bit 11 of *106.50 User status word1*.	*False*
	False	0.	1
	True	1.	2
	Other	A specific bit in another parameter.	3
106.72	*User status word 1 bit 12 sel*	Selects a binary source whose status is transmitted as bit 12 of *106.50 User status word1*.	*False*
	False	0.	1
	True	1.	2
	Other	A specific bit in another parameter.	3
106.73	*User status word 1 bit 13 sel*	Selects a binary source whose status is transmitted as bit 13 of *106.50 User status word1*.	*False*
	False	0.	1
	True	1.	2
	Other	A specific bit in another parameter.	3
106.74	*User status word 1 bit 14 sel*	Selects a binary source whose status is transmitted as bit 14 of *106.50 User status word1*.	*False*
	False	0.	1
	True	1.	2
	Other	A specific bit in another parameter.	3
106.75	*User status word 1 bit 15 sel*	Selects a binary source whose status is transmitted as bit 15 of *106.50 User status word1*.	*False*
	False	0.	1
	True	1.	2
	Other	A specific bit in another parameter.	3

No.	Name/Value	Description	Def/FbEq16
107 System info		Hardware and firmware information. All parameters in this group are read-only.	
107.03	*Drive rating id*	Type of the regenerative rectifier unit.	-
107.04	*Firmware name*	Firmware identification.	-
107.05	*Firmware version*	Version number of the firmware.	-
107.06	*Loading package name*	Name of the firmware loading package.	-
107.07	*Loading package version*	Version number of the firmware loading package.	-
107.08	*Bootloader version*	Version number of the firmware bootloader.	-
107.11	*Cpu usage*	Microprocessor load in percent.	-
	0 … 100%	Microprocessor load.	1 = 1%
107.13	*PU logic version number*	The version number of the power unit FPGA logic.	-
107.14	*FPGA logic version name*	Version name of the FPGA logic of the control unit.	-
107.15	*FPGA logic version number*	Version number of the FPGA logic of the control unit.	-
107.30	*Adaptive program status*	Shows the status of the adaptive program. See section *Adaptive programming* (page *18*).	-

Bit	Name	Description
0	Initialized	1 = Adaptive program initialized
1	Editing	1 = Adaptive program is being edited
2	Edit done	1 = Editing of adaptive program finished
3	Running	1 = Adaptive program running
4…13	Reserved	
14	State changing	Reserved
15	Faulted	1 = Error in adaptive program

	0000h…FFFFh	Adaptive program status.	1 = 1
110 Standard DI, RO		Configuration of digital inputs and relay outputs.	
110.01	*DI status*	Status of digital inputs DIIL and DI6…DI1. Bits 0…5 reflect the status of DI1…DI6; bit 15 reflects the status of the DIIL input.	-
	0000h…FFFFh	Status of digital inputs.	1 = 1
110.02	*DI delayed status*	Status of digital inputs DIIL and DI6…DI1 after any activation/deactivation delays. Bits 0…5 reflect the delayed status of DI1…DI6; bit 15 reflects the delayed status of the DIIL input.	-
	0000h…FFFFh	Delayed status of digital inputs.	1 = 1

No.	Name/Value	Description	Def/FbEq16
110.03	DI force selection	Defines how the true readings of the digital inputs can be overridden for eg. testing purposes. A bit in parameter 110.04 DI force data is provided for each digital input, and its value is applied whenever the corresponding bit in this parameter is 1.	0000h

Bit	Value
0	1 = Force DI1 to value of bit 0 of parameter 110.04 DI force data.
1	1 = Force DI2 to value of bit 1 of parameter 110.04 DI force data.
2	1 = Force DI3 to value of bit 2 of parameter 110.04 DI force data.
3	1 = Force DI4 to value of bit 3 of parameter 110.04 DI force data.
4	1 = Force DI5 to value of bit 4 of parameter 110.04 DI force data.
5	1 = Force DI6 to value of bit 5 of parameter 110.04 DI force data.
6…14	Reserved
15	1 = Force DIIL to value of bit 15 of parameter 110.04 DI force data.

	0000h…FFFFh	Status of digital inputs.	1 = 1
110.04	DI force data	Defines and contains the values of digital inputs that are used instead of the true readings if selected in parameter 110.03 DI force selection. Bit 0 is the forced value for DI1.	0000h
	0000h…FFFFh	Forced values of digital inputs.	1 = 1
110.05	DI1 ON delay	Defines the activation delay for digital input DI1.	0.0 s

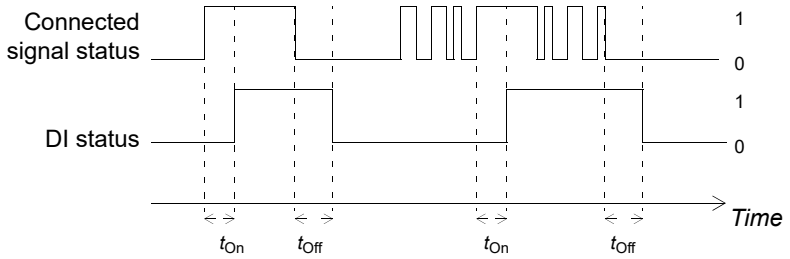

t_{On} 110.05 DI1 ON delay

t_{Off} 110.06 DI1 OFF delay

	0.0…3000.0 s	Activation delay for DI1.	10 = 1 s
110.06	DI1 OFF delay	Defines the deactivation delay for digital input DI1. See parameter 110.05 DI1 ON delay.	0.0 s
	0.0…3000.0 s	Deactivation delay for DI1.	10 = 1 s
110.07	DI2 ON delay	Defines the activation delay for digital input DI2.	0.0 s

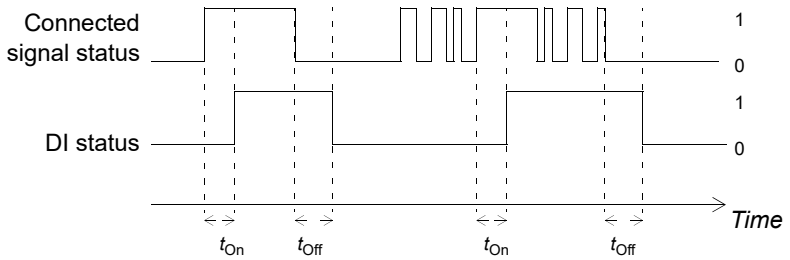

t_{On} 110.07 DI2 ON delay

t_{Off} 110.08 DI2 OFF delay

	0.0…3000.0 s	Activation delay for DI2.	10 = 1 s

No.	Name/Value	Description	Def/FbEq16
110.08	*DI2 OFF delay*	Defines the deactivation delay for digital input DI2. See parameter *110.07 DI2 ON delay*.	0.0 s
	0.0…3000.0 s	Deactivation delay for DI2.	10 = 1 s
110.09	*DI3 ON delay*	Defines the activation delay for digital input DI3.	0.0 s

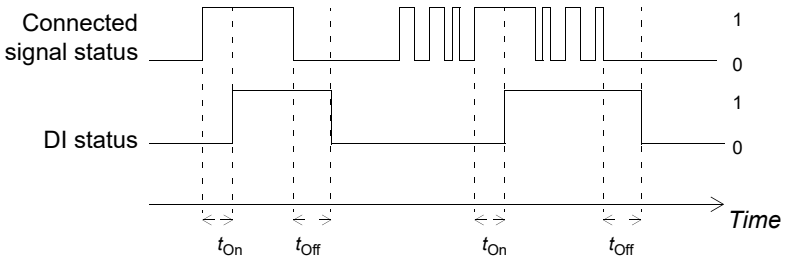

t_{On} *110.09 DI3 ON delay*

t_{Off} *110.10 DI3 OFF delay*

	0.0…3000.0 s	Activation delay for DI3.	10 = 1 s
110.10	*DI3 OFF delay*	Defines the deactivation delay for digital input DI3. See parameter *110.09 DI3 ON delay*.	0.0 s
	0.0…3000.0 s	Deactivation delay for DI3.	10 = 1 s
110.11	*DI4 ON delay*	Defines the activation delay for digital input DI4.	0.0 s

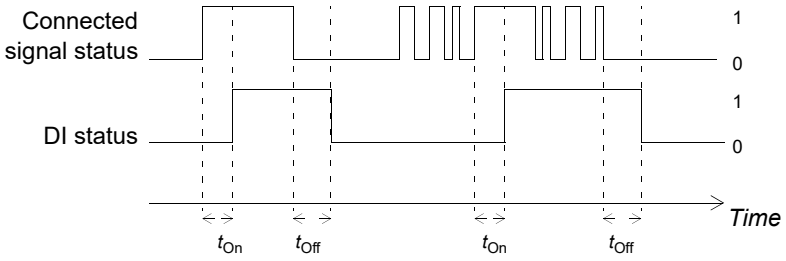

t_{On} *110.11 DI4 ON delay*

t_{Off} *110.12 DI4 OFF delay*

	0.0…3000.0 s	Activation delay for DI4.	10 = 1 s
110.12	*DI4 OFF delay*	Defines the deactivation delay for digital input DI4. See parameter *110.11 DI4 ON delay*.	0.0 s
	0.0…3000.0 s	Deactivation delay for DI4.	10 = 1 s
110.13	*DI5 ON delay*	Defines the activation delay for digital input DI5.	0.0 s

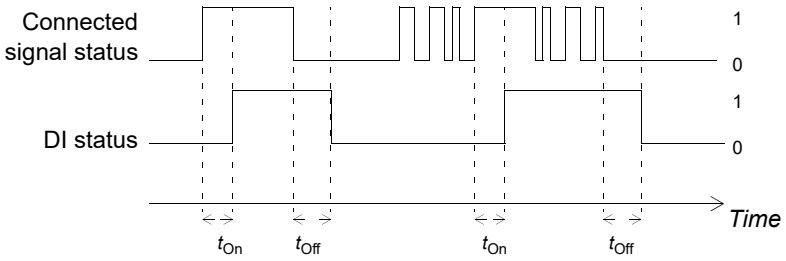

t_{On} *110.13 DI5 ON delay*

t_{Off} *110.14 DI4 OFF delay*

	0.0…3000.0 s	Activation delay for DI5.	10 = 1 s

No.	Name/Value	Description	Def/FbEq16
110.14	*DI5 OFF delay*	Defines the deactivation delay for digital input DI5. See parameter *110.13 DI5 ON delay*.	0.0 s
	0.0…3000.0 s	Deactivation delay for DI5.	10 = 1 s
110.15	*DI6 ON delay*	Defines the activation delay for digital input DI6.	0.0 s
		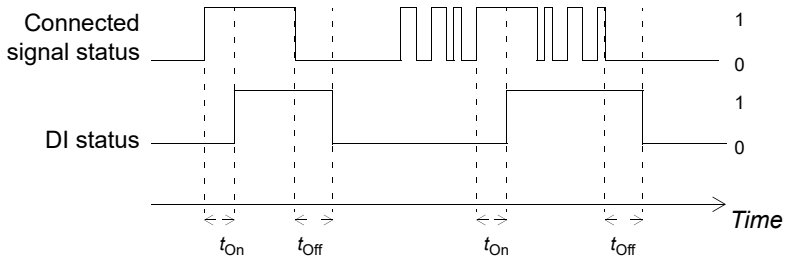 t_{On} *110.15 DI6 ON delay* t_{Off} *110.16 DI6 OFF delay*	
	0.0…3000.0 s	Activation delay for DI6.	10 = 1 s
110.16	*DI6 OFF delay*	Defines the deactivation delay for digital input DI6. See parameter *110.15 DI6 ON delay*.	0.0 s
	0.0…3000.0 s	Deactivation delay for DI6.	10 = 1 s
110.21	*RO status*	Shows the status of relay outputs RO8…RO1. **Example:** 00000001 = RO1 is energized, RO2…RO8 are de-energized.	-
	0000h…FFFFh	Status of relay outputs.	1 = 1
110.24	*RO1 source*	Selects a signal to be connected to relay output RO1. **Note:** This parameter is write-protected. **Note:** For the cabinet-installed multidrives, ACS880-907, check the delivery-specific use from the delivery-specific circuit diagrams.	*Charging*
	Not energized	Relay output is not energized.	0
	Energized	Relay output is energized.	1
	Ready	Bit 0 of *106.11 Main status word* (see page *46*). Relay is energized when the regenerative rectifier is ready.	2
	Started	Bit 4 of *106.16 Drive status word 1* (see page *46*). Relay is energized when the regenerative rectifier is started.	3
	Running	Bit 1 of *106.11 Main status word* (see page *46*). Relay is energized when the regenerative rectifier is running.	4
	Warning	Bit 7 of *106.11 Main status word* (see page *46*). Relay is energized when a warning is active.	5
	Fault	Bit 3 of *106.11 Main status word* (see page *46*). Relay is energized when a fault is active.	6
	MCB	Bit 13 of *106.16 Drive status word 1* (see page *46*). Relay is energized when MCB closing command is given.	7
	Charging	Bit 14 of *106.16 Drive status word 1* (see page *46*). Relay is energized when external charging is charging the DC link.	8
	Fault (-1)	Inverted bit 3 of *106.11 Main status word* (see page *46*). Relay is de-energized when a fault is active.	9
	Other	A specific bit in another parameter.	

No.	Name/Value	Description	Def/FbEq16
110.25	*RO1 ON delay*	Defines the activation delay for relay output RO1.	0.0 s
	0.0 … 3000.0 s	Activation delay for RO1.	10 = 1 s
110.26	*RO1 OFF delay*	Defines the deactivation delay for relay output RO1. See parameter *110.25 RO1 ON delay*.	0.0 s
	0.0 … 3000.0 s	Deactivation delay for RO1.	10 = 1 s
110.27	*RO2 source*	Selects a regenerative rectifier signal to be connected to relay output RO2. For the available selections, see parameter *110.24 RO1 source*. **Note:** For the cabinet-installed multidrives, ACS880-907, check the delivery-specific use from the delivery-specific circuit diagrams. Do not change the setting if relay output is in use and connected already.	*Fault (-1)*
110.28	*RO2 ON delay*	Defines the activation delay for relay output RO2.	0.0 s
	0.0 … 3000.0 s	Activation delay for RO2.	10 = 1 s
110.29	*RO2 OFF delay*	Defines the deactivation delay for relay output RO2. See parameter *110.28 RO2 ON delay*.	0.0 s
	0.0 … 3000.0 s	Deactivation delay for RO2.	10 = 1 s
110.30	*RO3 source*	Selects a signal to be connected to relay output RO3. **Note:** This parameter is write-protected. **Note:** For the cabinet-installed multidrives, ACS880-907, check the delivery-specific use from the delivery-specific circuit diagrams. For the available selections, see parameter *110.24 RO1 source*.	*MCB*

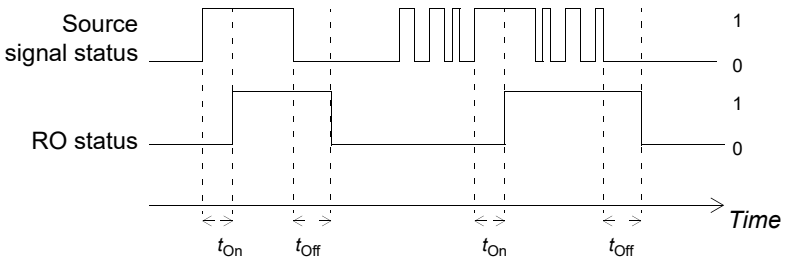

t_{On} *110.25 RO1 ON delay*

t_{Off} *110.26 RO1 OFF delay*

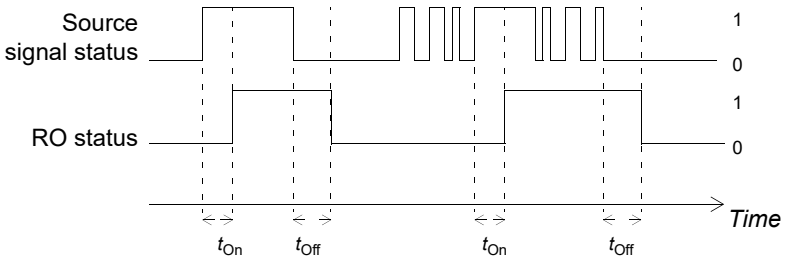

t_{On} *110.28 RO2 ON delay*

t_{Off} *110.29 RO2 OFF delay*

No.	Name/Value	Description	Def/FbEq16
110.31	RO3 ON delay	Defines the activation delay for relay output RO3.	0.0 s

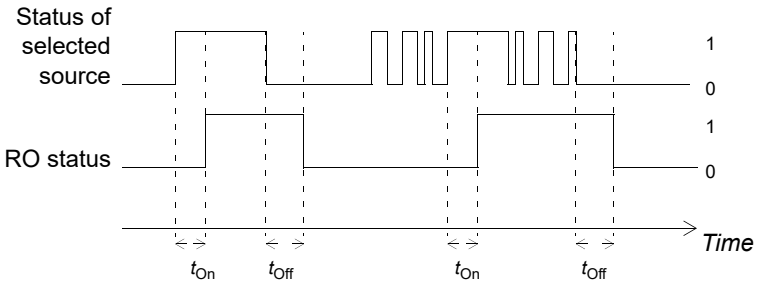

t_{On} 110.31 RO3 ON delay

t_{Off} 110.32 RO3 OFF delay

	0.0 … 3000.0 s	Activation delay for RO3.	10 = 1 s
110.32	RO3 OFF delay	Defines the deactivation delay for relay output RO3. See parameter 110.31 RO3 ON delay.	0.0 s
	0.0 … 3000.0 s	Deactivation delay for RO3.	10 = 1 s
110.51	DI filter time	Defines a filtering time for parameter 110.01 DI status.	10.0 ms
	0.3 … 100.0 ms	Filtering time for 110.01.	10 = 1 ms
110.99	RO/DIO control word	Storage parameter for controlling the relay outputs and digital input/outputs. To control the relay outputs (RO) and the digital input/outputs (DIO), send a control word with the bit assignments shown below as Modbus I/O data. Set the target selection parameter of that particular data. In the source selection parameter of the desired output, select the appropriate bit of this word.	0000h

Bit	Name	Description
0	RO1	Source bits for relay outputs RO1…RO3 (see parameters 110.24, 110.27 and 110.30).
1	RO2	
2	RO3	
3…7	Reserved	
8	DIO1	Source bits for digital input/outputs DIO1…DIO2 (see parameters 111.06 and 111.10).
9	DIO2	
10…15	Reserved	

	0000h…FFFFh	RO/DIO control word.	1 = 1

111 Standard DIO, FI, FO		Configuration of digital input/outputs and frequency inputs/outputs.	
111.01	DIO status	Status of digital input/outputs DIO8…DIO1. **Example:** 0000001001 = DIO1 and DIO4 are on, the remainder are off.	-
	0000h…FFFFh	Status of digital input/outputs.	1 = 1
111.02	DIO delayed status	Status of digital input/outputs DIO8…DIO1 after activation/deactivation delays. Bit 0 reflects the delayed status of DIO1.	-
	0000h…FFFFh	Delayed status of digital input/outputs.	1 = 1
111.05	DIO1 function	Selects whether DIO1 is used as a digital output or input. **Note:** This parameter is not effective if DIO1 has been selected as a frequency input.	Output
	Output	DIO1 is used as a digital output.	0
	Input	DIO1 is used as a digital input.	1

No.	Name/Value	Description	Def/FbEq16
	Freq	DIO1 is used as a frequency input or frequency output.	2
111.06	*DIO1 output source*	Selects a signal to be connected to digital input/output DIO1 when parameter *111.05 DIO1 function* is set to *Output*.	*Not energized*
	Not energized	Output is not energized.	0
	Energized	Output is energized.	1
	Ready	Bit 0 of *106.11 Main status word* (see page *46*). Output is energized when the regenerative rectifier is ready.	2
	Started	Bit 4 of *106.16 Drive status word 1* (see page *46*). Output is energized when the regenerative rectifier is started.	3
	Running	Bit 1 of *106.11 Main status word* (see page *46*). Output is energized when the regenerative rectifier is running.	4
	Warning	Bit 7 of *106.11 Main status word* (see page *46*). Output is energized when a warning is active.	5
	Fault	Bit 3 of *106.11 Main status word* (see page *46*). Output is energized when a fault is active.	6
	MCB	Bit 13 of *106.16 Drive status word 1* (see page *46*). Output is energized when MCB closing command is given.	7
	Charging	Bit 14 of *106.16 Drive status word 1* (see page *46*). Output is energized when external charging is charging the DC link.	8
	Fault (-1)	Inverted bit 3 of *106.11 Main status word* (see page *46*). Relay is de-energized when a fault is active.	9
	Other	Source selection (see *Terms and abbreviations* on page *39*).	-
111.07	*DIO1 ON delay*	Defines the activation delay for digital input/output DIO1 when parameter *111.05 DIO1 function* is set to *Output*.	0.0 s

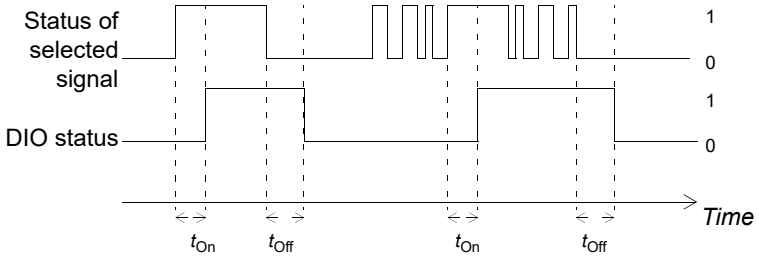

t_{On} *111.07 DIO1 ON delay*

t_{Off} *111.08 DIO1 OFF delay*

	0.0 … 3000.0 s	Activation delay for DIO1 when set as an output.	10 = 1 s
111.08	*DIO1 OFF delay*	Defines the deactivation delay for digital input/output DIO1 when parameter *111.05 DIO1 function* is set to *Output*. See parameter *111.07 DIO1 ON delay*.	0.0 s
	0.0 … 3000.0 s	Deactivation delay for DIO1 when set as an output.	10 = 1 s
111.09	*DIO2 function*	Selects whether DIO2 is used as a digital output or input. **Note:** This parameter is not effective if DIO2 has been selected as a frequency output.	*Output*
	Output	DIO2 is used as a digital output.	0
	Input	DIO2 is used as a digital input.	1
	Freq	DIO2 is used as a frequency input or frequency output.	2
111.10	*DIO2 output source*	Selects a regenerative rectifier signal to be connected to digital input/output DIO2 when parameter *111.09 DIO2 function* is set to *Output*. For the available selections, see parameter *111.06 DIO1 output source*.	*Not energized*

No.	Name/Value	Description	Def/FbEq16
111.11	DIO2 ON delay	Defines the activation delay for digital input/output DIO2 when parameter 111.09 DIO2 function is set to Output. 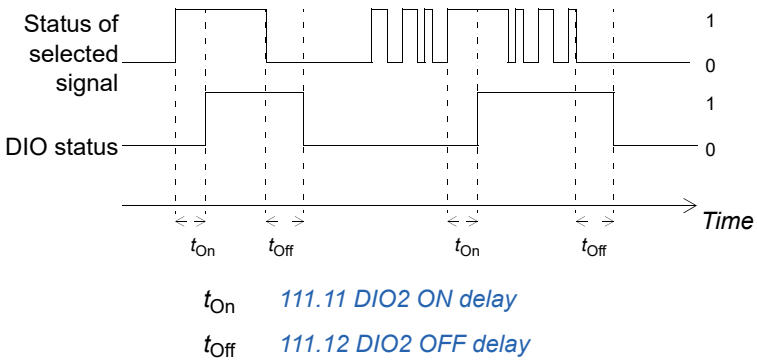 	0.0 s
	0.0 … 3000.0 s	Activation delay for DIO2 when set as an output.	10 = 1 s
111.12	DIO2 OFF delay	Defines the deactivation delay for digital input/output DIO2 when parameter 111.09 DIO2 function is set to Output. See parameter 111.11 DIO2 ON delay.	0.0 s
	0.0 … 3000.0 s	Deactivation delay for DIO2 when set as an output.	10 = 1 s
111.38	Freq in 1 actual value	Value of frequency input 1 before scaling. See parameter 111.42 Freq in 1 min.	-
	0 … 16000 Hz	Unscaled value of frequency input 1.	1 = 1 Hz
111.39	Freq in 1 scaled	Value of frequency input 1 after scaling. See parameter 111.42 Freq in 1 min.	-
	-32768.000 … 32767.000	Scaled value of frequency input 1.	1 = 1
111.42	Freq in 1 min	Defines the minimum input frequency for frequency input 1. The incoming frequency signal (111.38 Freq in 1 actual value) is scaled into an internal signal (111.39 Freq in 1 scaled) by parameters 111.42…111.45 as follows: 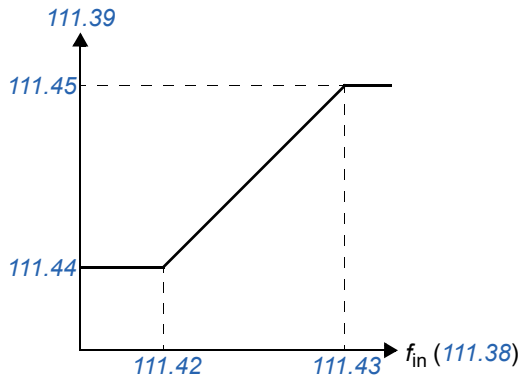 	0 Hz
	0 … 16000 Hz	Minimum frequency of frequency input 1.	1 = 1 Hz
111.43	Freq in 1 max	Defines the maximum input frequency for frequency input 1. See parameter 111.42 Freq in 1 min.	16000 Hz
	0 … 16000 Hz	Maximum frequency for frequency input 1.	1 = 1 Hz
111.44	Freq in 1 at scaled min	Defines the value that corresponds to the minimum input frequency defined by parameter 111.42 Freq in 1 min. See diagram at parameter 111.42 Freq in 1 min.	0.000
	-32768.000 … 32767.000	Value corresponding to minimum of frequency input 1.	1 = 1

No.	Name/Value	Description	Def/FbEq16
111.45	*Freq in 1 at scaled max*	Defines the value that corresponds to the maximum input frequency defined by parameter *111.43 Freq in 1 max*. See diagram at parameter *111.42 Freq in 1 min*.	1500.000
	-32768.000 … 32767.000	Value corresponding to maximum of frequency input 1.	1 = 1
111.81	*DIO filter time*	Defines a filtering time for parameter *111.01 DIO status*. The filtering time will only affect the DIOs that are in input mode.	10.0 ms
	0.3 … 100.0 ms	Filtering time for *111.01*.	10 = 1 ms

112 Standard AI		Configuration of analog inputs.	
112.03	*AI supervision function*	Selects how the regenerative rectifier reacts when an analog input signal moves out of the minimum and/or maximum limits specified for the input. The inputs and the limits to be observed are selected by parameter *112.04 AI supervision selection*.	*No action*
	No action	No action taken.	0
	Fault	The regenerative rectifier trips on *8E06 AI supervision*.	1
	Warning	The regenerative rectifier generates an *AE67 AI supervision* warning.	2
112.04	*AI supervision selection*	Specifies the analog input limits to be supervised. See parameter *112.03 AI supervision function*.	0000b

Bit	Name	Description
0	AI1 < MIN	1 = Minimum limit supervision of AI1 active.
1	AI1 > MAX	1 = Maximum limit supervision of AI1 active.
2	AI2 < MIN	1 = Minimum limit supervision of AI2 active.
3	AI2 > MAX	1 = Maximum limit supervision of AI2 active.
4…15	Reserved	

	0000b…1111b	Activation of analog input supervision.	1 = 1
112.11	*AI1 actual value*	Value of analog input AI1 in mA or V (depending on whether the input is set to current or voltage by jumper J1).	-
	-22.000 … 22.000 mA or V	Value of analog input AI1.	1000 = 1 mA or V
112.12	*AI1 scaled value*	Value of analog input AI1 after scaling. See parameters *112.19 AI1 scaled at AI1 min* and *112.20 AI1 scaled at AI1 max*.	-
	-32768.000 … 32767.000	Scaled value of analog input AI1.	1 = 1
112.15	*AI1 unit selection*	Selects the unit for readings and settings related to analog input 1.	*V*
	mA	Milliamperes.	10
	V	Volts.	2

No.	Name/Value	Description	Def/FbEq16
112.16	*AI1 filter time*	Defines the filter time constant for analog input AI1. 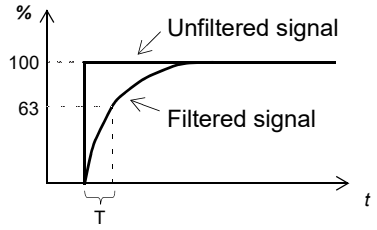 $O = I \times (1 - e^{-t/T})$ I = filter input (step) O = filter output *t* = time T = filter time constant **Note:** The signal is also filtered due to the signal interface hardware (approximately 0.25 ms time constant). This cannot be changed by any parameter.	0.000 s
	0.000 … 30.000 s	Filter time constant.	1000 = 1 s
112.17	*AI1 min*	Defines the minimum value for analog input AI1. See the drawing at parameter *112.19 AI1 scaled at AI1 min*.	0.000 V
	-22.000 … 22.000 mA or V	Minimum value of AI1.	1000 = 1 mA or V
112.18	*AI1 max*	Defines the maximum value for analog input AI1. See the drawing at parameter *112.19 AI1 scaled at AI1 min*.	20.000 V
	-22.000 … 22.000 mA or V	Maximum value of AI1.	1000 = 1 mA or V
112.19	*AI1 scaled at AI1 min*	Defines the real value of parameter *112.12 AI1 scaled value* that that corresponds to the minimum analog input AI1 value defined by parameter *112.17 AI1 min*. 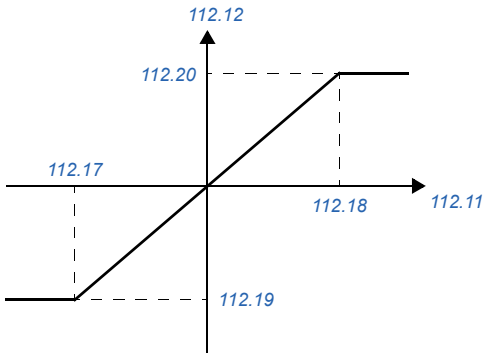 	0.000
	-32768.000 …32767.000	Real value corresponding to minimum AI1 value.	1 = 1
112.20	*AI1 scaled at AI1 max*	Defines the real value of parameter *112.12 AI1 scaled value* that corresponds to the maximum analog input AI1 value defined by parameter *112.18 AI1 max*. See the drawing at parameter *112.19 AI1 scaled at AI1 min*.	1920.000
	-32768.000 … 32767.000	Real value corresponding to maximum AI1 value.	1 = 1
112.21	*AI2 actual value*	Value of analog input AI2 in mA or V (depending on whether the input is set to current or voltage by jumper J2).	-
	-22.000 … 22.000 mA or V	Value of analog input AI2.	1000 = 1 mA or V

No.	Name/Value	Description	Def/FbEq16
112.22	*AI2 scaled value*	Value of analog input AI2 after scaling. See parameters *112.29 AI2 scaled at AI2 min* and *112.30 AI2 scaled at AI2 max*.	-
	-32768.000 … 32767.000	Scaled value of analog input AI2.	1 = 1
112.25	*AI2 unit selection*	Selects the unit for readings and settings related to analog input 2.	*mA*
	mA	Milliamperes.	10
	V	Volts.	2
112.26	*AI2 filter time*	Defines the filter time constant for analog input AI2. See parameter *112.16 AI1 filter time*.	0.000 s
	0.000 … 30.000 s	Filter time constant.	1000 = 1 s
112.27	*AI2 min*	Defines the minimum value for analog input AI2.	0.000 mA
	-22.000 … 22.000 mA or V	Minimum value of AI2.	1000 = 1 mA or V
112.28	*AI2 max*	Defines the maximum value for analog input AI2.	20.000 mA
	-22.000 … 22.000 mA or V	Maximum value of AI2.	1000 = 1 mA or V
112.29	*AI2 scaled at AI2 min*	Defines the real value of parameter *112.22 AI2 scaled value* that corresponds to the minimum analog input AI2 value defined by parameter *112.27 AI2 min*. 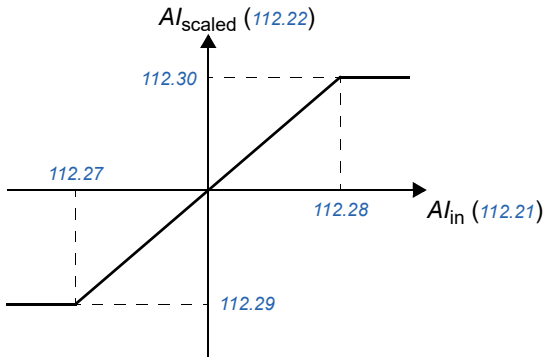	0.000
	-32768.000 …32767.000	Real value corresponding to minimum AI2 value.	1 = 1
112.30	*AI2 scaled at AI2 max*	Defines the real value of parameter *112.22 AI2 scaled value* that corresponds to the maximum analog input AI2 value defined by parameter *112.28 AI2 max*. See the drawing at parameter *112.29 AI2 scaled at AI2 min*.	1920.000
	-32768.000 … 32767.000	Real value corresponding to maximum AI2 value.	1 = 1

113 Standard AO		Configuration of analog outputs.	
113.11	*AO1 actual value*	Value of AO1 in mA.	-
	0.000 … 22.000 mA	Value of AO1.	1000 = 1 mA
113.12	*AO1 source*	Selects a signal to be connected to analog output AO1.	*Zero*
	Zero	None.	0
	DC voltage	*101.01 DC voltage*	1
	AO1 data storage	*113.91 AO1 data storage* (page *64*).	37
	AO2 data storage	*113.92 AO2 data storage* (page *64*).	38
	Other	The value is taken from another parameter.	-

No.	Name/Value	Description	Def/FbEq16
113.16	AO1 filter time	Defines the filtering time constant for analog output AO1. 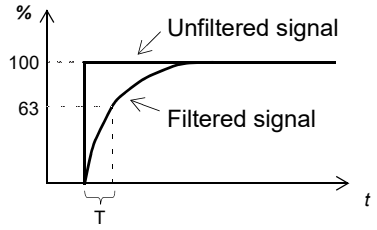 $O = I \times (1 - e^{-t/T})$ I = filter input (step) O = filter output *t* = time T = filter time constant	0.100 s
	0.000 … 30.000 s	Filter time constant.	1000 = 1 s
113.17	AO1 source min	Defines the real value of the signal (selected by parameter 113.12 AO1 source) that corresponds to the minimum AO1 output value (defined by parameter 113.19 AO1 out at AO1 src min). 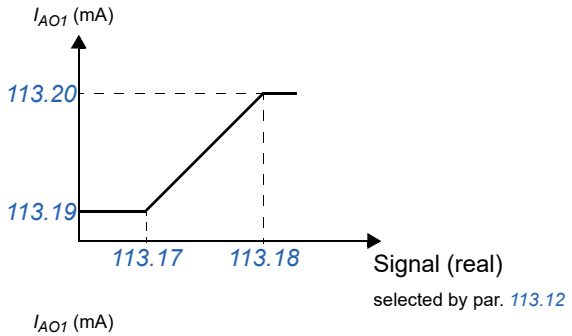 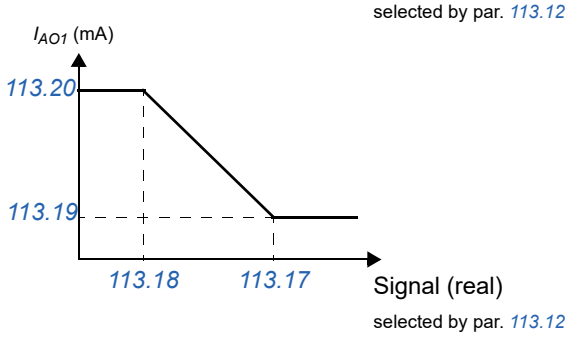 	0.0
	-32768.0 … 32767.0	Real signal value corresponding to minimum AO1 output value.	1 = 1
113.18	AO1 source max	Defines the real value of the signal (selected by parameter 113.12 AO1 source) that corresponds to the maximum AO1 output value (defined by parameter 113.20 AO1 out at AO1 src max). See parameter 113.17 AO1 source min.	100.0
	-32768.0 … 32767.0	Real signal value corresponding to maximum AO1 output value.	1 = 1
113.19	AO1 out at AO1 src min	Defines the minimum output value for analog output AO1. See also drawing at parameter 113.17 AO1 source min.	4.000 mA
	0.000 … 22.000 mA	Minimum AO1 output value.	1000 = 1 mA

No.	Name/Value	Description	Def/FbEq16
113.20	*AO1 out at AO1 src max*	Defines the maximum output value for analog output AO1. See also drawing at parameter *113.17 AO1 source min*.	20.000 mA
	0.000 … 22.000 mA	Maximum AO1 output value.	1000 = 1 mA
113.21	*AO2 actual value*	Value of AO2 in mA.	-
	0.000 … 22.000 mA	Value of AO2.	1000 = 1 mA
113.22	*AO2 source*	Selects a signal to be connected to analog output AO2. For the selections, see parameter *113.12 AO1 source*.	*Zero*
113.26	*AO2 filter time*	Defines the filtering time constant for analog output AO2. See parameter *113.16 AO1 filter time*.	0.100 s
	0.000 … 30.000 s	Filter time constant.	1000 = 1 s
113.27	*AO2 source min*	Defines the real value of the signal (selected by parameter *113.22 AO2 source*) that corresponds to the minimum AO2 output value (defined by parameter *113.29 AO2 out at AO2 src min*). 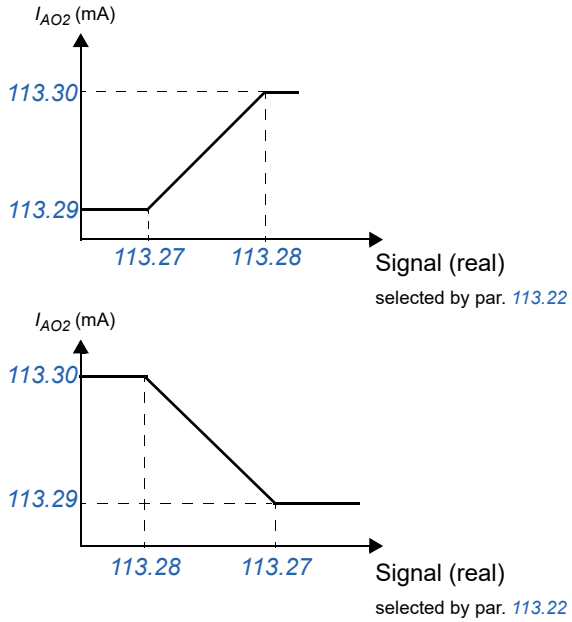 	0.0
	-32768.0 … 32767.0	Real signal value corresponding to minimum AO2 output value.	1 = 1
113.28	*AO2 source max*	Defines the real value of the signal (selected by parameter *113.22 AO2 source*) that corresponds to the maximum AO2 output value (defined by parameter *113.30 AO2 out at AO2 src max*). See parameter *113.27 AO2 source min*.	100.0
	-32768.0 … 32767.0	Real signal value corresponding to maximum AO2 output value.	1 = 1
113.29	*AO2 out at AO2 src min*	Defines the minimum output value for analog output AO2. See also drawing at parameter *113.27 AO2 source min*.	4.000 mA
	0.000 … 22.000 mA	Minimum AO2 output value.	1000 = 1 mA
113.30	*AO2 out at AO2 src max*	Defines the maximum output value for analog output AO2. See also drawing at parameter *113.27 AO2 source min*.	20.000 mA
	0.000 … 22.000 mA	Maximum AO2 output value.	1000 = 1 mA

No.	Name/Value	Description	Def/FbEq16
113.91	AO1 data storage	Storage parameter for controlling analog output AO1, eg. through fieldbus. In 113.12 AO1 source, select AO1 data storage. Then set this parameter as the target of the incoming value data.	0.00
	-327.68 … 327.67	Storage parameter for AO1.	100 = 1
113.92	AO2 data storage	Storage parameter for controlling analog output AO2, eg. through fieldbus. In 113.22 AO2 source, select AO2 data storage. Then set this parameter as the target of the incoming value data.	0.00
	-327.68 … 327.67	Storage parameter for AO2.	100 = 1

114 Extension I/O module 1		Configuration of I/O extension module 1. See also section Programmable I/O extensions (page 26). **Note:** The contents of the parameter group vary according to the selected I/O extension module type.	
114.01	Module 1 type	Activates (and specifies the type of) I/O extension module 1.	None
	None	Inactive.	0
	FIO-01	FIO-01.	1
	FIO-11	FIO-11.	2
	FDIO-01	FDIO-01.	3
	FAIO-01	FAIO-01.	4
114.02	Module 1 location	Specifies the node number (1…3) on the control unit into which the I/O extension module is installed. (Node 1 = slot 1, node 2 = slot 2, node 3 = slot 3) Alternatively, specifies the node ID of the slot on an FEA-03 extension adapter.	Slot 1
	Slot 1	Slot 1.	1
	Slot 2	Slot 2.	2
	Slot 3	Slot 3.	3
	4…254	Node ID of the slot on the FEA-03 extension adapter.	1 = 1
114.03	Module 1 status	Displays the status of I/O extension module 1.	No option
	No option	No module detected in the specified slot.	0
	No communication	A module has been detected but cannot be communicated with.	1
	Unknown	The module type is unknown.	2
	FIO-01	An FIO-01 module has been detected and is active.	3
	FIO-11	An FIO-11 module has been detected and is active.	4
	FAIO-01	An FAIO-01 module has been detected and is active.	24
114.05	DI status	*(Visible when 114.01 Module 1 type = FDIO-01)* Displays the status of the digital inputs on the extension module. The activation/deactivation delays (if any are specified) are ignored. A filtering time (for input mode) can be defined by parameter 114.08 DI filter time. Bit 0 indicates the status of DI1. **Note:** The number of active bits in this parameter depends on the number of digital input/outputs on the extension module. **Example:** 0101b = DI1 and DI3 are on, remainder are off. This parameter is read-only.	-
	0000b…1111b	Status of digital inputs.	1 = 1

No.	Name/Value	Description	Def/FbEq16
114.05	*DIO status*	*(Visible when 114.01 Module 1 type = FIO-01 or FIO-11)* Displays the electrical status of the digital input/outputs on the extension module. The activation/deactivation delays (if any are specified) are ignored. Bit 0 indicates the status of DIO1. **Note:** The number of active bits in this parameter depends on the number of digital input/outputs on the extension module. **Example:** 00001001 = DIO1 and DIO4 are on, remainder are off. This parameter is read-only.	-
	0000h…FFFFh	Status of digital input/outputs.	1 = 1
114.06	*DI delayed status*	*(Visible when 114.01 Module 1 type = FDIO-01)* Displays the delayed status of the digital inputs on the extension module. The word is updated only after activation/deactivation delays (if any are specified). Bit 0 indicates the status of DI1. **Note:** The number of active bits in this parameter depends on the number of digital inputs on the extension module. **Example:** 0101b = DI1 and DI3 are on, remainder are off. This parameter is read-only.	-
	0000b…1111b	Delayed status of digital inputs.	1 = 1
114.06	*DIO delayed status*	*(Visible when 114.01 Module 1 type = FIO-01 or FIO-11)* Displays the status of the digital input/outputs on the extension module. This word is updated only after activation/deactivation delays (if any are specified). Bit 0 indicates the status of DIO1. **Note:** The number of active bits in this parameter depends on the number of digital input/outputs on the extension module. **Example:** 0000001001 = DIO1 and DIO4 are on, remainder are off. This parameter is read-only.	-
	0000h…FFFFh	Delayed status of digital input/outputs.	1 = 1
114.08	*DI filter time*	*(Visible when 114.01 Module 1 type = FDIO-01)* Defines a filtering time for parameter *114.05 DI status*.	10.0 ms
	0.8 … 100.0 ms	Filtering time for *114.05*.	10 = 1 ms
114.09	*DIO1 configuration*	*(Visible when 114.01 Module 1 type = FIO-01 or FIO-11)* Selects whether DIO1 of the extension module is used as a digital input or output.	*Input*
	Input	DIO1 is used as a digital input.	0
	Output	DIO1 is used as a digital output.	1
114.10	*DIO1 filter gain*	*(Visible when 114.01 Module 1 type = FIO-11)* Determines a filtering time for DIO1 when it is used as an input.	*7.5 us*
	7.5 us	7.5 µs.	0
	195 us	195 µs.	1
	780 us	780 µs.	2
	4.680 ms	4.680 ms.	3
114.11	*DIO1 output source*	*(Visible when 114.01 Module 1 type = FIO-01 or FIO-11)* Selects a signal to be connected to digital input/output DIO1 of the extension module when parameter *114.09 DIO1 configuration* is set to *Output*.	*Not energized*
	Not energized	Output is not energized.	0
	Energized	Output is energized.	1

No.	Name/Value	Description	Def/FbEq16
	Other	A specific bit in another parameter.	-
114.12	*DI1 ON delay*	*(Visible when 114.01 Module 1 type = FDIO-01)* Defines the activation delay for digital input DI1.	0.00 s

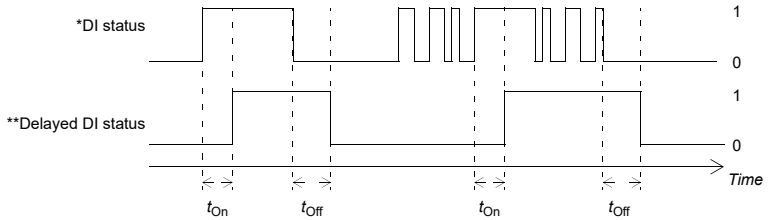

t_{On} = *114.12 DI1 ON delay*
t_{Off} = *114.13 DI1 OFF delay*
*Electrical status of DI or status of selected source (in output mode). Indicated by *114.05 DI status*.
**Indicated by *114.06 DI delayed status*.

	0.00 … 3000.00 s	Activation delay for DI1.	10 = 1 s
114.12	*DIO1 ON delay*	*(Visible when 114.01 Module 1 type = FIO-01 or FIO-11)* Defines the activation delay for digital input/output DIO1.	0.0 s

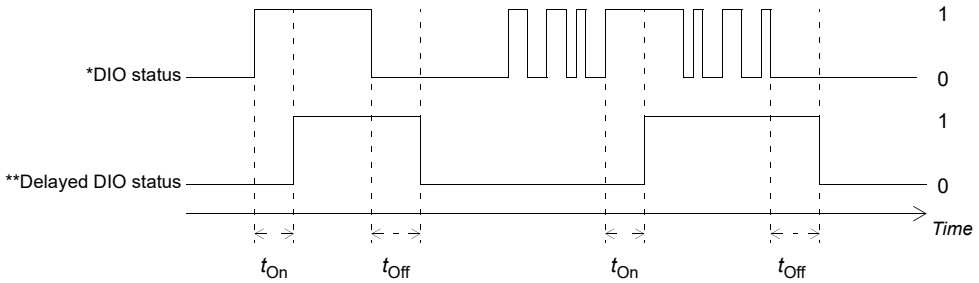

tOn = *114.12 DIO1 ON delay*
tOff = *114.13 DIO1 OFF delay*
*Electrical status of DIO (in input mode) or status of selected source (in output mode). Indicated by *114.05 DIO status*.
**Indicated by *114.06 DIO delayed status*.

	0.0 … 3000.0 s	Activation delay for DIO1.	10 = 1 s
114.13	*DI1 OFF delay*	*(Visible when 114.01 Module 1 type = FDIO-01)* Defines the deactivation delay for digital input DI1. See parameter *114.12 DI1 ON delay*.	0.00 s
	0.00 … 3000.00 s	Deactivation delay for DI1.	10 = 1 s
114.13	*DIO1 OFF delay*	*(Visible when 114.01 Module 1 type = FIO-01 or FIO-11)* Defines the deactivation delay for digital input/output DIO1. See parameter *114.12 DIO1 ON delay*.	0.0 s
	0.0 … 3000.0 s	Deactivation delay for DIO1.	10 = 1 s
114.14	*DIO2 configuration*	*(Visible when 114.01 Module 1 type = FIO-01 or FIO-11)* Selects whether DIO2 of the extension module is used as a digital input or output.	*Input*
	Input	DIO2 is used as a digital input.	0
	Output	DIO2 is used as a digital output.	1
114.15	*DIO2 filter gain*	*(Visible when 114.01 Module 1 type = FIO-11)* Determines a filtering time for DIO2 when it is used as an input.	*7.5 us*
	7.5 us	7.5 microseconds.	0
	195 us	195 microseconds.	1
	780 us	780 microseconds.	2

No.	Name/Value	Description	Def/FbEq16
	4.680 ms	4.680 milliseconds.	3
114.16	*DIO2 output source*	*(Visible when 114.01 Module 1 type = FIO-01 or FIO-11)* Selects a signal to be connected to digital input/output DIO2 when parameter *114.14 DIO2 configuration* is set to *Output*. For the available selections, see parameter *114.11 DIO1 output source*.	*Not energized*
114.17	*DI2 ON delay*	*(Visible when 114.01 Module 1 type = FDIO-01)* Defines the activation delay for digital input DI2. See parameter *114.12 DI1 ON delay*.	0.00 s
	0.00 … 3000.00 s	Activation delay for DI2.	10 = 1 s
114.17	*DIO2 ON delay*	*(Visible when 114.01 Module 1 type = FIO-01 or FIO-11)* Defines the activation delay for digital input/output DIO2.	0.0 s

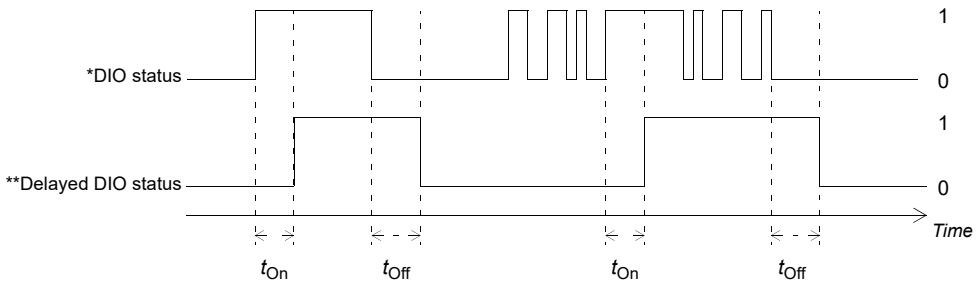

tOn = *114.17 DIO2 ON delay*

tOff = *114.18 DIO2 OFF delay*

*Electrical status of DIO (in input mode) or status of selected source (in output mode). Indicated by *114.05 DIO status*.

**Indicated by *114.06 DIO delayed status*.

	0.0 … 3000.0 s	Activation delay for DIO2.	10 = 1 s
114.18	*DI2 OFF delay*	*(Visible when 114.01 Module 1 type = FDIO-01)* Defines the deactivation delay for digital input DI2. See parameter *114.12 DI1 ON delay*.	0.00 s
	0.00 … 3000.00 s	Deactivation delay for DI2.	10 = 1 s
114.18	*DIO2 OFF delay*	*(Visible when 114.01 Module 1 type = FIO-01 or FIO-11)* Defines the deactivation delay for digital input/output DIO2. See parameter *114.17 DIO2 ON delay*.	0.0 s
	0.0 … 3000.0 s	Deactivation delay for DIO2.	10 = 1 s
114.19	*DIO3 configuration*	*(Visible when 114.01 Module 1 type = FIO-01)* Selects whether DIO3 of the extension module is used as a digital input or output.	*Input*
	Input	DIO3 is used as a digital input.	0
	Output	DIO3 is used as a digital output.	1
114.19	*AI supervision function*	*(Visible when 114.01 Module 1 type = FIO-11 or FAIO-01)* Selects how the regenerative rectifier reacts when an analog input signal moves out of the minimum and/or maximum limits specified for the input. The inputs and the limits to be observed are selected by parameter *114.20 AI supervision selection*.	*No action*
	No action	No action taken.	0
	Fault	Regenerative rectifier trips on *8E06 AI supervision*.	1
	Warning	Regenerative rectifier generates an *AE67 AI supervision* warning.	2

No.	Name/Value	Description	Def/FbEq16
114.20	AI supervision selection	(Visible when 114.01 Module 1 type = FIO-11 or FAIO-01) Specifies the analog input limits to be supervised. See parameter 114.19 AI supervision function.	0000h

Bit	Name	Description
0	AI1 < MIN	1 = Minimum limit supervision of AI1 active.
1	AI1 > MAX	1 = Maximum limit supervision of AI1 active.
2	AI2 < MIN	1 = Minimum limit supervision of AI2 active.
3	AI2 > MAX	1 = Maximum limit supervision of AI2 active.
4	AI3 < MIN	1 = Minimum limit supervision of AI3 active.
5	AI3 > MAX	1 = Maximum limit supervision of AI3 active.
6…15	Reserved	

	0000h…FFFFh	Activation of analog input supervision.	1 = 1
114.21	DIO3 output source	(Visible when 114.01 Module 1 type = FIO-01) Selects a signal to be connected to digital input/output DIO3 when parameter 114.19 DIO3 configuration is set to Output. For the available selections, see parameter 114.11 DIO1 output source.	Not energized
114.22	DI3 ON delay	(Visible when 114.01 Module 1 type = FDIO-01) Defines the activation delay for digital input DI3. See parameter 114.12 DI1 ON delay.	0.00 s
	0.00 … 3000.00 s	Activation delay for DI3.	10 = 1 s
114.22	DIO3 ON delay	(Visible when 114.01 Module 1 type = FIO-01 or FIO-11) Defines the activation delay for digital input/output DIO3.	0.0 s

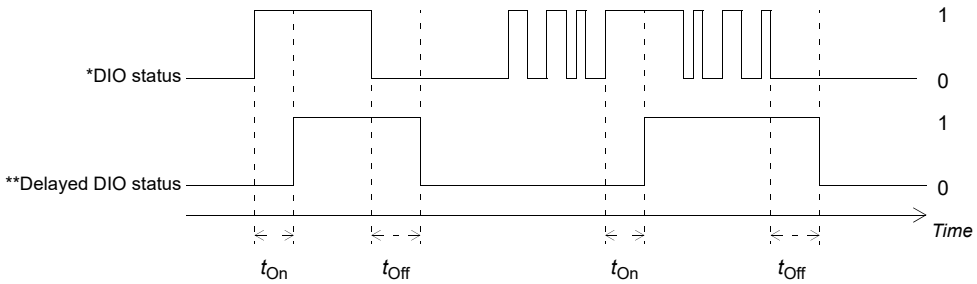

tOn = 114.22 DIO3 ON delay

tOff = 114.23 DIO3 OFF delay

*Electrical status of DIO (in input mode) or status of selected source (in output mode). Indicated by 114.05 DIO status.

**Indicated by 114.06 DIO delayed status.

	0.0 … 3000.0 s	Activation delay for DIO3.	10 = 1 s
114.22	AI force sel	(Visible when 114.01 Module 1 type = FIO-11 or FAIO-01) The true readings of the analog inputs can be overridden for, eg. testing purposes. A forced value parameter is provided for each analog input, and its value is applied whenever the corresponding bit in this parameter is 1.	00000000h

Bit	Value
0	1 = Force AI1 to value of parameter 114.28 AI1 force data.
1	1 = Force AI2 to value of parameter 114.43 AI2 force data.
2	1 = Force AI3 to value of parameter 114.58 AI3 force data.
3…31	Reserved.

	00000000h … FFFFFFFFh	Forced values selector for analog inputs.	1 = 1

No.	Name/Value	Description	Def/FbEq16
114.23	*DI3 OFF delay*	*(Visible when 114.01 Module 1 type = FDIO-01)* Defines the deactivation delay for digital input DI3. See parameter *114.12 DI1 ON delay*.	0.00 s
	0.00 … 3000.00 s	Deactivation delay for DI3.	10 = 1 s
114.23	*DIO3 OFF delay*	*(Visible when 114.01 Module 1 type = FIO-01)* Defines the deactivation delay for digital input/output DIO3. See parameter *114.22 DIO3 ON delay*.	0.0 s
	0.0 … 3000.0 s	Deactivation delay for DIO3.	10 = 1 s
114.24	*DIO4 configuration*	*(Visible when 114.01 Module 1 type = FIO-01)* Selects whether DIO4 of the extension module is used as a digital input or output.	*Input*
	Input	DIO4 is used as a digital input.	0
	Output	DIO4 is used as a digital output.	1
114.26	*DIO4 output source*	*(Visible when 114.01 Module 1 type = FIO-01)* Selects a signal to be connected to digital input/output DIO4 when parameter *114.24 DIO4 configuration* is set to *Output*. For the available selections, see parameter *114.11 DIO1 output source*.	*Not energized*
114.26	*AI1 actual value*	*(Visible when 114.01 Module 1 type = FIO-11* or *FAIO-01)* Displays the value of analog input AI1 in mA or V (depending on whether the input is set to current or voltage). This parameter is read-only.	-
	-22.000 … 22.000 mA or V	Value of analog input AI1.	1000 = 1 mA or V
114.27	*DIO4 ON delay*	*(Visible when 114.01 Module 1 type = FIO-01 or FIO-11)* Defines the activation delay for digital input/output DIO4.	0.0 s

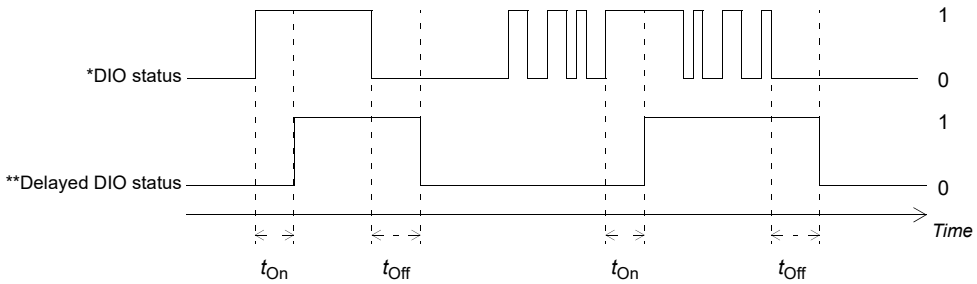

tOn = *114.27 DIO4 ON delay*

tOff = *114.28 DIO4 OFF delay*

*Electrical status of DIO (in input mode) or status of selected source (in output mode). Indicated by *114.05 DIO status*.

**Indicated by *114.06 DIO delayed status*.

	0.0 … 3000.0 s	Activation delay for DIO4.	10 = 1 s
114.27	*AI1 scaled value*	*(Visible when 114.01 Module 1 type = FIO-11* or *FAIO-01)* Displays the value of analog input AI1 after scaling. See parameter *114.35 AI1 scaled at AI1 min*. This parameter is read-only.	-
	-32768.000 … 32767.000	Scaled value of analog input AI1.	1 = 1
114.28	*DIO4 OFF delay*	*(Visible when 114.01 Module 1 type = FIO-01)* Defines the deactivation delay for digital input/output DIO4. See parameter *114.27 DIO4 ON delay*.	0.0 s
	0.0 … 3000.0 s	Deactivation delay for DIO4.	10 = 1 s

No.	Name/Value	Description	Def/FbEq16
114.28	*AI1 force data*	*(Visible when 114.01 Module 1 type = FIO-11 or FAIO-01)* Forced value that can be used instead of the true reading of the input. See parameter *114.22 AI force sel*.	-
	-22.000 … 22.000 mA or V	Forced value of analog input AI1.	1000 = 1 mA or V
114.29	*AI1 HW switch pos*	*(Visible when 114.01 Module 1 type = FIO-11 or FAIO-01)* Shows the position of the hardware current/voltage selector on the I/O extension module. **Note:** The setting of the current/voltage selector must match the unit selection made in parameter *114.30 AI1 unit selection*. I/O module reboot either by cycling the power or through parameter *196.08 Control board boot* is required to validate any changes in the jumper settings.	-
	V	Volts.	2
	mA	Milliamperes.	10
114.30	*AI1 unit selection*	*(Visible when 114.01 Module 1 type = FIO-11 or FAIO-01)* Selects the unit for readings and settings related to analog input AI1. **Note:** This setting must match the corresponding hardware setting on the I/O extension module (see the manual of the I/O extension module). The hardware setting is shown by parameter *114.29 AI1 HW switch pos*. I/O module reboot either by cycling the power or through parameter *196.08 Control board boot* is required to validate any changes in the jumper settings.	*mA*
	V	Volts.	2
	mA	Milliamperes.	10
114.31	*RO status*	*(Visible when 114.01 Module 1 type = FIO-01 or FDIO-01)* Status of relay outputs on the I/O extension module. **Example:** 00000001b = RO1 is energized, RO2 is de-energized.	-
	0000h…FFFFh	Status of relay outputs.	1 = 1
114.31	*AI1 filter gain*	*(Visible when 114.01 Module 1 type = FIO-11 or FAIO-01)* Selects a hardware filtering time for AI1. See also parameter *114.32 AI1 filter time*.	*No filtering*
	No filtering	No filtering.	0
	125 us	125 microseconds.	1
	250 us	250 microseconds.	2
	500 us	500 microseconds.	3
	1 ms	1 millisecond.	4
	2 ms	2 milliseconds.	5
	4 ms	4 milliseconds.	6
	7.9375 ms	7.9375 milliseconds.	7

No.	Name/Value	Description	Def/FbEq16
114.32	*AI1 filter time*	*(Visible when 114.01 Module 1 type = FIO-11 or FAIO-01)* Defines the filter time constant for analog input AI1. 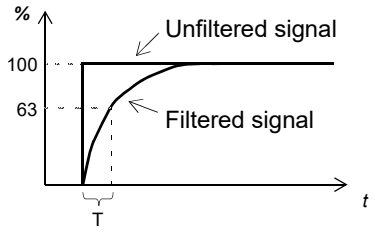 $O = I \times (1 - e^{-t/T})$ I = filter input (step) O = filter output *t* = time T = filter time constant **Note:** The signal is also filtered due to the signal interface hardware. See parameter *114.31 AI1 filter gain*.	0.040 s
	0.000 … 30.000 s	Filter time constant.	1000 = 1 s
114.33	*AI1 min*	*(Visible when 114.01 Module 1 type = FIO-11 or FAIO-01)* Defines the minimum value for analog input AI1. See also parameter *114.21 DIO3 output source*.	0.000 mA or V
	-22.000 … 22.000 mA or V	Minimum value of AI1.	1000 = 1 mA or V
114.34	*RO1 source*	*(Visible when 114.01 Module 1 type = FIO-01 or FDIO-01)* Selects a signal to be connected to relay output RO1. For the available selections, see parameter *114.11 DIO1 output source*.	*Not energized*
114.34	*AI1 max*	*(Visible when 114.01 Module 1 type = FIO-11 or FAIO-01)* Defines the maximum value for analog input AI1. See also parameter *114.21 DIO3 output source*.	10.000 mA or V
	-22.000 … 22.000 mA or V	Maximum value of AI1.	1000 = 1 mA or V
114.35	*RO1 ON delay*	*(Visible when 114.01 Module 1 type = FIO-01 or FDIO-01)* Defines the activation delay for relay output RO1. 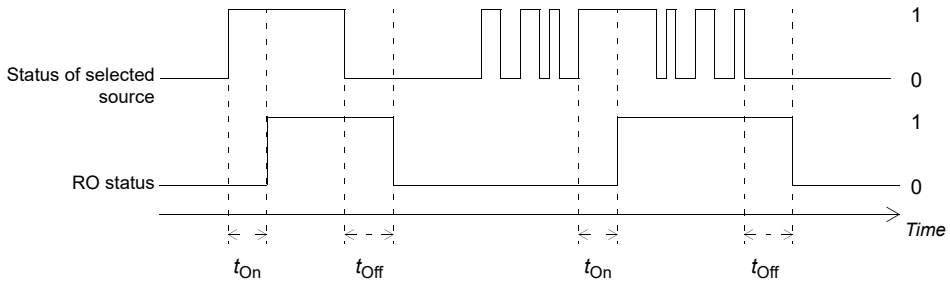 tOn = *114.35 RO1 ON delay* tOff = *114.36 RO1 OFF delay*	0.0 s
	0.0 … 3000.0 s	Activation delay for RO1.	10 = 1 s

No.	Name/Value	Description	Def/FbEq16
114.35	AI1 scaled at AI1 min	*(Visible when 114.01 Module 1 type = FIO-11 or FAIO-01)* Defines the real value that corresponds to the minimum analog input AI1 value defined by parameter *114.33 AI1 min*. 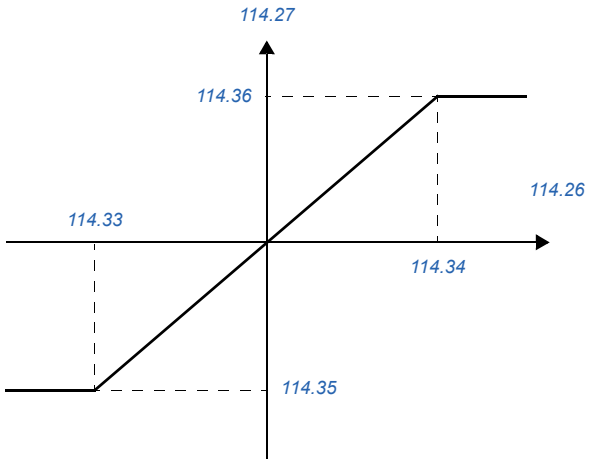	0.000
	-32768.000 … 32767.000	Real value corresponding to minimum AI1 value.	1 = 1
114.36	RO1 OFF delay	*(Visible when 114.01 Module 1 type = FIO-01 or FDIO-01)* Defines the deactivation delay for relay output RO1. See parameter *114.35 RO1 ON delay*.	0.0 s
	0.0 … 3000.0 s	Deactivation delay for RO1.	10 = 1 s
114.36	AI1 scaled at AI1 max	*(Visible when 114.01 Module 1 type = FIO-11 or FAIO-01)* Defines the real value that corresponds to the maximum analog input AI1 value defined by parameter *114.34 AI1 max*. See the drawing at parameter *114.35 AI1 scaled at AI1 min*.	1500.0
	-32768.000 … 32767.000	Real value corresponding to maximum AI1 value.	1 = 1
114.37	RO2 source	*(Visible when 114.01 Module 1 type = FIO-01 or FDIO-01)* Selects a signal to be connected to relay output RO2. For the available selections, see parameter *114.11 DIO1 output source*.	*Not energized*
114.38	RO2 ON delay	*(Visible when 114.01 Module 1 type = FIO-01 or FDIO-01)* Defines the activation delay for relay output RO2. 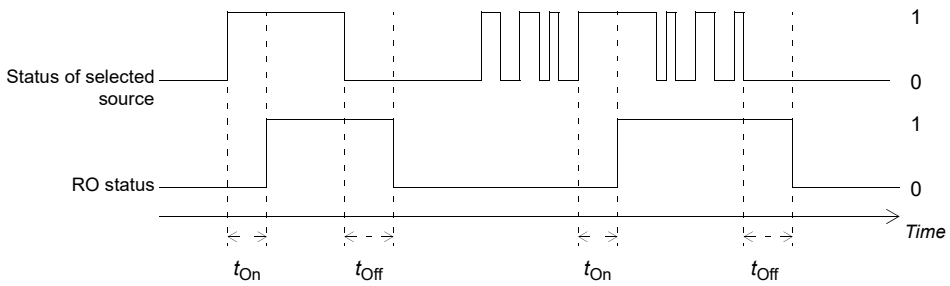 tOn = *114.38 RO2 ON delay* tOff = *114.39 RO2 OFF delay*	0.0 s
	0.0 … 3000.0 s	Activation delay for RO2.	10 = 1 s
114.39	RO2 OFF delay	*(Visible when 114.01 Module 1 type = FIO-01 or FDIO-01)* Defines the deactivation delay for relay output RO1. See parameter *114.35 RO1 ON delay*.	0.0 s
	0.0 … 3000.0 s	Deactivation delay for RO2.	10 = 1 s

No.	Name/Value	Description	Def/FbEq16
114.41	*AI2 actual value*	*(Visible when 114.01 Module 1 type = FIO-11 or FAIO-01)* Displays the value of analog input AI2 in mA or V (depending on whether the input is set to current or voltage). This parameter is read-only.	-
	-22.000 … 22.000 mA or V	Value of analog input AI2.	1000 = 1 mA or V
114.42	*AI2 scaled value*	*(Visible when 114.01 Module 1 type = FIO-11 or FAIO-01)* Displays the value of analog input AI2 after scaling. See parameter *114.50 AI2 scaled at AI2 min*. This parameter is read-only.	-
	-32768.000 … 32767.000	Scaled value of analog input AI2.	1 = 1
114.43	*AI2 force data*	*(Visible when 114.01 Module 1 type = FIO-11 or FAIO-01)* Forced value that can be used instead of the true reading of the input. See parameter *114.22 AI force sel*.	0.000 mA
	-22.000 … 22.000 mA or V	Forced value of analog input AI2.	1000 = 1 mA or V
114.44	*AI2 HW switch pos*	*(Visible when 114.01 Module 1 type = FIO-11 or FAIO-01)* Shows the position of the hardware current/voltage selector on the I/O extension module. **Note:** The setting of the current/voltage selector must match the unit selection made in parameter *114.45 AI2 unit selection*. I/O module reboot either by cycling the power or through parameter *196.08 Control board boot* is required to validate any changes in the jumper settings.	-
	V	Volts.	2
	mA	Milliamperes.	10
114.45	*AI2 unit selection*	*(Visible when 114.01 Module 1 type = FIO-11 or FAIO-01)* Selects the unit for readings and settings related to analog input AI2. **Note:** This setting must match the corresponding hardware setting on the I/O extension module (see the manual of the I/O extension module). The hardware setting is shown by parameter *114.44 AI2 HW switch pos*. I/O module reboot either by cycling the power or through parameter *196.08 Control board boot* is required to validate any changes in the jumper settings.	*mA*
	V	Volts.	2
	mA	Milliamperes.	10
114.46	*AI2 filter gain*	*(Visible when 114.01 Module 1 type = FIO-11 or FAIO-01)* Selects a hardware filtering time for AI2. See also parameter *114.47 AI2 filter time*.	*No filtering*
	No filtering	No filtering.	0
	125 us	125 microseconds.	1
	250 us	250 microseconds.	2
	500 us	500 microseconds.	3
	1 ms	1 millisecond.	4
	2 ms	2 milliseconds.	5
	4 ms	4 milliseconds.	6
	7.9375 ms	7.9375 milliseconds.	7

No.	Name/Value	Description	Def/FbEq16
114.47	*AI2 filter time*	*(Visible when 114.01 Module 1 type = FIO-11 or FAIO-01)* Defines the filter time constant for analog input AI2. 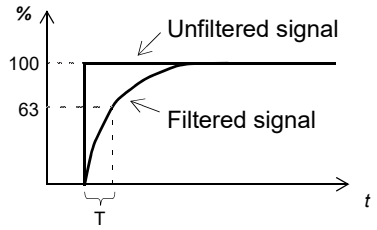 $O = I \times (1 - e^{-t/T})$ I = filter input (step) O = filter output *t* = time T = filter time constant **Note:** The signal is also filtered due to the signal interface hardware. See parameter *114.46 AI2 filter gain*.	0.100 s
	0.000 … 30.000 s	Filter time constant.	1000 = 1 s
114.48	*AI2 min*	*(Visible when 114.01 Module 1 type = FIO-11 or FAIO-01)* Defines the minimum value for analog input AI2. See also parameter *114.21 DIO3 output source*.	0.000 mA or V
	-22.000 … 22.000 mA or V	Minimum value of AI2.	1000 = 1 mA or V
114.49	*AI2 max*	*(Visible when 114.01 Module 1 type = FIO-11 or FAIO-01)* Defines the maximum value for analog input AI2. See also parameter *114.21 DIO3 output source*.	10.000 mA or V
	-22.000 … 22.000 mA or V	Maximum value of AI2.	1000 = 1 mA or V
114.50	*AI2 scaled at AI2 min*	*(Visible when 114.01 Module 1 type = FIO-11 or FAIO-01)* Defines the real value that corresponds to the minimum analog input AI2 value defined by parameter 14.48 AI2 min. 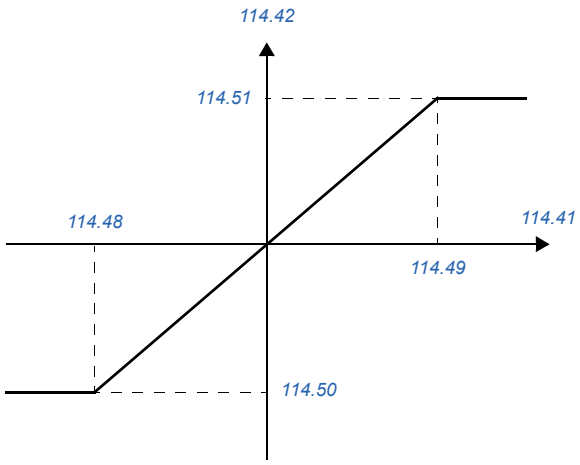 	0.000
	-32768.000 … 32767.000	Real value corresponding to minimum AI2 value.	1 = 1

No.	Name/Value	Description	Def/FbEq16
114.51	*AI2 scaled at AI2 max*	*(Visible when 114.01 Module 1 type = FIO-11* or *FAIO-01)* Defines the real value that corresponds to the maximum analog input AI2 value defined by parameter *114.49 AI2 max*. See the drawing at parameter *114.50 AI2 scaled at AI2 min*.	1500.0
	-32768.000 … 32767.000	Real value corresponding to maximum AI2 value.	1 = 1
114.56	*AI3 actual value*	*(Visible when 114.01 Module 1 type = FIO-11)* Displays the value of analog input AI3 in mA or V (depending on whether the input is set to current or voltage). This parameter is read-only.	-
	-22.000 … 22.000 mA or V	Value of analog input AI3.	1000 = 1 mA or V
114.57	*AI3 scaled value*	*(Visible when 114.01 Module 1 type = FIO-11)* Displays the value of analog input AI3 after scaling. See parameter *114.65 AI3 scaled at AI3 min*. This parameter is read-only.	-
	-32768.000 … 32767.000	Scaled value of analog input AI3.	1 = 1
114.58	*AI3 force data*	*(Visible when 114.01 Module 1 type = FIO-11)* Forced value that can be used instead of the true reading of the input. See parameter *114.22 AI force sel*.	0.000 mA
	-22.000 … 22.000 mA or V	Forced value of analog input AI3.	1000 = 1 mA or V
114.59	*AI3 HW switch pos*	*(Visible when 114.01 Module 1 type = FIO-11)* Shows the position of the hardware current/voltage selector on the I/O extension module. **Note:** The setting of the current/voltage selector must match the unit selection made in parameter *114.60 AI3 unit selection*. I/O module reboot either by cycling the power or through parameter *196.08 Control board boot* is required to validate any changes in the jumper settings.	-
	V	Volts.	2
	mA	Milliamperes.	10
114.60	*AI3 unit selection*	*(Visible when 114.01 Module 1 type = FIO-11)* Selects the unit for readings and settings related to analog input AI3. **Note:** This setting must match the corresponding hardware setting on the I/O extension module (see the manual of the I/O extension module). The hardware setting is shown by parameter *114.59 AI3 HW switch pos*. I/O module reboot either by cycling the power or through parameter *196.08 Control board boot* is required to validate any changes in the jumper settings.	*mA*
	V	Volts.	2
	mA	Milliamperes.	10
114.61	*AI3 filter gain*	*(Visible when 114.01 Module 1 type = FIO-11)* Selects a hardware filtering time for AI3. See also parameter *114.62 AI3 filter time*.	*No filtering*
	No filtering	No filtering.	0
	125 us	125 microseconds.	1
	250 us	250 microseconds.	2
	500 us	500 microseconds.	3
	1 ms	1 millisecond.	4
	2 ms	2 milliseconds.	5
	4 ms	4 milliseconds.	6

No.	Name/Value	Description	Def/FbEq16
	7.9375 ms	7.9375 milliseconds.	7
114.62	AI3 filter time	*(Visible when 114.01 Module 1 type = FIO-11)* Defines the filter time constant for analog input AI3. 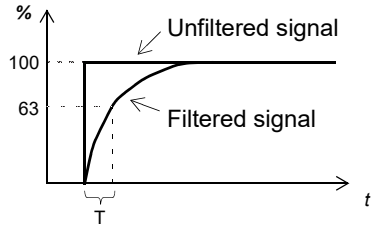 $O = I \times (1 - e^{-t/T})$ I = filter input (step) O = filter output *t* = time T = filter time constant **Note:** The signal is also filtered due to the signal interface hardware. See parameter *114.61 AI3 filter gain*.	0.100 s
	0.000 … 30.000 s	Filter time constant.	1000 = 1 s
114.63	AI3 min	*(Visible when 114.01 Module 1 type = FIO-11)* Defines the minimum value for analog input AI3. See also parameter *114.21 DIO3 output source*.	0.000 mA or V
	-22.000 … 22.000 mA or V	Minimum value of AI3.	1000 = 1 mA or V
114.64	AI3 max	*(Visible when 114.01 Module 1 type = FIO-11)* Defines the maximum value for analog input AI3. See also parameter *114.21 DIO3 output source*.	10.000 mA or V
	-22.000 … 22.000 mA or V	Maximum value of AI3.	1000 = 1 mA or V
114.65	AI3 scaled at AI3 min	*(Visible when 114.01 Module 1 type = FIO-11)* Defines the real value that corresponds to the minimum analog input AI2 value defined by parameter *114.48 AI2 min*. 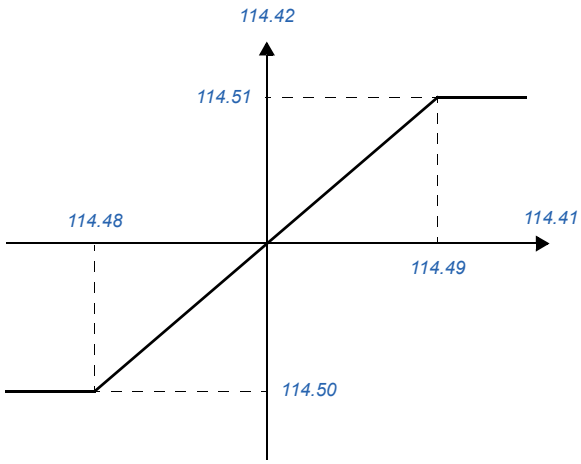 	0.000
	-32768.000 … 32767.000	Real value corresponding to minimum AI3 value.	1 = 1

No.	Name/Value	Description	Def/FbEq16
114.66	*AI3 scaled at AI3 max*	*(Visible when 114.01 Module 1 type = FIO-11)* Defines the real value that corresponds to the maximum analog input AI3 value defined by parameter *114.64 AI3 max*. See the drawing at parameter *114.65 AI3 scaled at AI3 min*.	1500.0
	-32768.000 … 32767.000	Real value corresponding to maximum AI3 value.	1 = 1
114.71	*AO force selection*	*(Visible when 114.01 Module 1 type = FIO-11 or FAIO-01)* The value of the analog output can be overridden for eg. testing purposes. A forced value parameter (*114.78 AO1 force data*) is provided for the analog output, and its value is applied whenever the corresponding bit in this parameter is 1.	00000000h

Bit	Value
0	1 = Force AO1 to value of parameter *114.78 AO1 force data*.
1…31	Reserved.

	00000000h … FFFFFFFFh	Forced values selector for analog outputs.	1 = 1
114.76	*AO1 actual value*	*(Visible when 114.01 Module 1 type = FIO-11 or FAIO-01)* Displays the value of AO1 in mA. This parameter is read-only.	-
	0.000 … 22.000 mA	Value of AO1.	1000 = 1 mA
114.77	*AO1 source*	*(Visible when 114.01 Module 1 type = FIO-11 or FAIO-01)* Selects a signal to be connected to analog output AO1. Alternatively, sets the output to excitation mode to feed a constant current to a temperature sensor.	*Zero*
	Zero	None.	0
	Other	The value is taken from another parameter.	-
114.78	*AO1 force data*	*(Visible when 114.01 Module 1 type = FIO-11 or FAIO-01)* Forced value that can be used instead of the selected output signal. See parameter *114.71 AO force selection*.	0.000 mA
	0.000 … 22.000 mA	Forced value of analog output AO1.	1000 = 1 mA
114.79	*AO1 filter time*	*(Visible when 114.01 Module 1 type = FIO-11 or FAIO-01)* Defines the filtering time constant for analog output AO1. 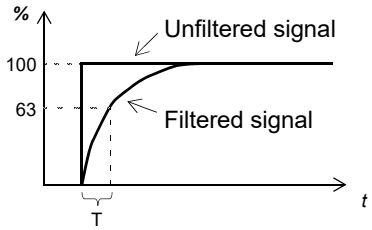 $O = I \times (1 - e^{-t/T})$ I = filter input (step) O = filter output *t* = time T = filter time constant	0.100 s
	0.000 … 30.000 s	Filter time constant.	1000 = 1 s

No.	Name/Value	Description	Def/FbEq16
114.80	AO1 source min	*(Visible when 114.01 Module 1 type = FIO-11 or FAIO-01)* Defines the real value of the signal (selected by parameter 114.77 AO1 source) that corresponds to the minimum AO1 output value (defined by parameter 114.82 AO1 out at AO1 src min) 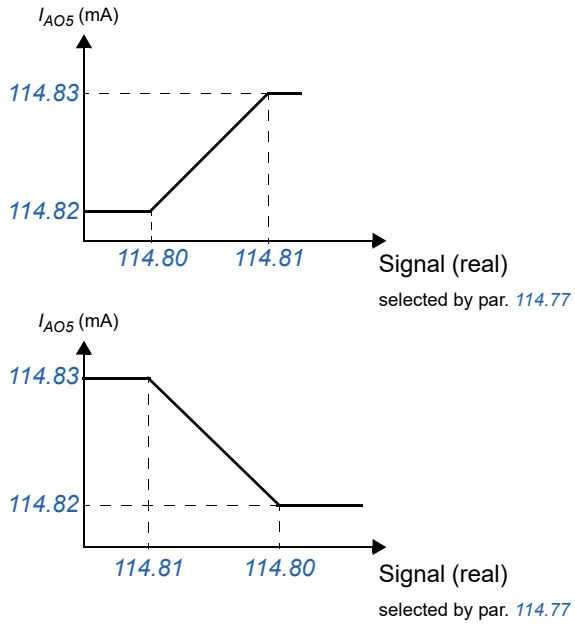 	0.0
	-32768.0 … 32767.0	Real signal value corresponding to minimum AO1 output value.	1 = 1
114.81	AO1 source max	*(Visible when 114.01 Module 1 type = FIO-11 or FAIO-01)* Defines the real value of the signal (selected by parameter 114.77 AO1 source) that corresponds to the maximum AO1 output value (defined by parameter 114.83 AO1 out at AO1 src max). See parameter 114.80 AO1 source min.	1500.0
	-32768.0 … 32767.0	Real signal value corresponding to maximum AO1 output value.	1 = 1
114.82	AO1 out at AO1 src min	*(Visible when 114.01 Module 1 type = FIO-11 or FAIO-01)* Defines the minimum output value for analog output AO1. See also drawing at parameter 114.80 AO1 source min.	0.000 mA
	0.000 … 22.000 mA	Minimum AO1 output value.	1000 = 1 mA
114.83	AO1 out at AO1 src max	*(Visible when 114.01 Module 1 type = FIO-11 or FAIO-01)* Defines the maximum output value for analog output AO1. See also drawing at parameter 114.80 AO1 source min.	20.000 mA
	0.000 … 22.000 mA	Maximum AO1 output value.	1000 = 1 mA
114.86	AO2 actual value	*(Visible when 114.01 Module 1 type = FAIO-01)* Displays the value of AO2 in mA. This parameter is read-only.	-
	0.000 … 22.000 mA	Value of AO2.	1000 = 1 mA
114.87	AO2 source	*(Visible when 114.01 Module 1 type = FAIO-01)* Selects a signal to be connected to analog output AO2. Alternatively, sets the output to excitation mode to feed a constant current to a temperature sensor. For the selections, see parameter 114.77 AO1 source.	Zero

No.	Name/Value	Description	Def/FbEq16
114.88	*AO2 force data*	*(Visible when 114.01 Module 1 type = FAIO-01)* Forced value that can be used instead of the selected output signal. See parameter *114.71 AO force selection*.	0.000 mA
	0.000 … 22.000 mA	Forced value of analog output AO2.	1000 = 1 mA
114.89	*AO2 filter time*	*(Visible when 114.01 Module 1 type = FAIO-01)* Defines the filtering time constant for analog output AO2. 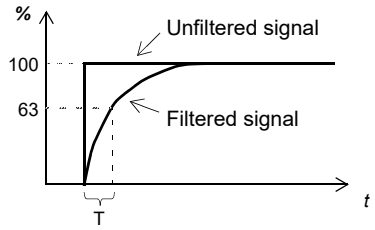 $O = I \times (1 - e^{-t/T})$ I = filter input (step) O = filter output *t* = time T = filter time constant	0.100 s
	0.000 … 30.000 s	Filter time constant.	1000 = 1 s
114.90	*AO2 source min*	*(Visible when 114.01 Module 1 type = FAIO-01)* Defines the real value of the signal (selected by parameter *114.87 AO2 source*) that corresponds to the minimum AO2 output value (defined by parameter *114.92 AO2 out at AO2 src min*). 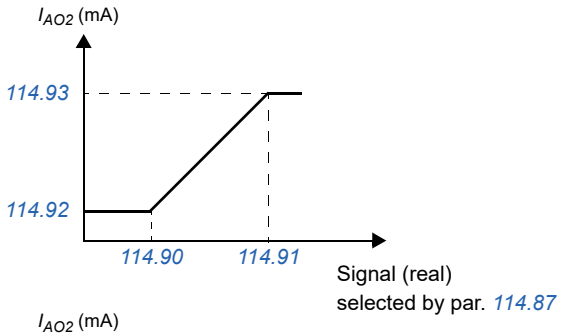 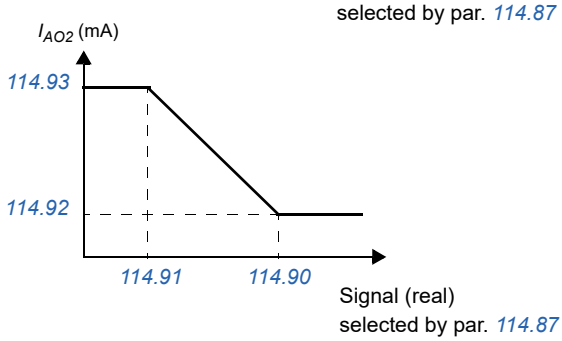 	0.0
	-32768.0 … 32767.0	Real signal value corresponding to minimum AO2 output value.	1 = 1

No.	Name/Value	Description	Def/FbEq16
114.91	AO2 source max	(Visible when 114.01 Module 1 type = FAIO-01) Defines the real value of the signal (selected by parameter 114.87 AO2 source) that corresponds to the maximum AO2 output value (defined by parameter 114.93 AO2 out at AO2 src max). See parameter 114.90 AO2 source min.	100.0
	-32768.0 … 32767.0	Real signal value corresponding to maximum AO2 output value.	1 = 1
114.92	AO2 out at AO2 src min	(Visible when 114.01 Module 1 type = FAIO-01) Defines the minimum output value for analog output AO2. See also drawing at parameter 114.90 AO2 source min.	0.000 mA
	0.000 … 22.000 mA	Minimum AO2 output value.	1000 = 1 mA
114.93	AO2 out at AO2 src max	(Visible when 114.01 Module 1 type = FAIO-01) Defines the maximum output value for analog output AO2. See also drawing at parameter 114.90 AO2 source min.	10.000 mA
	0.000 … 22.000 mA	Maximum AO2 output value.	1000 = 1 mA

115 Extension I/O module 2		Configuration of I/O extension module 2. See also section Programmable I/O extensions (page 26). **Note:** The contents of the parameter group vary according to the selected I/O extension module type.	
115.01	Module 2 type	See parameter 114.01 Module 1 type.	None
115.02	Module 2 location	See parameter 114.02 Module 1 location.	Slot 1
115.03	Module 2 status	See parameter 114.03 Module 1 status.	No option
115.05	DI status	(Visible when 115.01 Module 2 type = FDIO-01) See parameter 114.05 DI status.	-
115.05	DIO status	(Visible when 115.01 Module 2 type = FIO-01 or FIO-11) See parameter 114.05 DIO status.	-
115.06	DI delayed status	(Visible when 115.01 Module 2 type = FDIO-01) See parameter 114.06 DI delayed status.	-
115.06	DIO delayed status	(Visible when 115.01 Module 2 type = FIO-01 or FIO-11) See parameter 114.06 DIO delayed status.	-
115.08	DI filter time	(Visible when 115.01 Module 2 type = FDIO-01) See parameter 114.08 DI delayed status.	10.0 ms
115.09	DIO1 configuration	(Visible when 115.01 Module 2 type = FIO-01 or FIO-11) See parameter 114.09 DIO1 configuration.	Input
115.10	DIO1 filter gain	(Visible when 115.01 Module 2 type = FIO-11) See parameter 114.10 DIO1 filter gain.	7.5 us
115.11	DIO1 output source	(Visible when 115.01 Module 2 type = FIO-01 or FIO-11) See parameter 114.11 DIO1 output source.	Not energized
115.12	DI1 ON delay	(Visible when 115.01 Module 2 type = FDIO-01) See parameter 114.12 DI1 ON delay.	0.00 s
115.12	DIO1 ON delay	(Visible when 115.01 Module 2 type = FIO-01 or FIO-11) See parameter 114.12 DIO1 ON delay.	0.0 s
115.13	DI1 OFF delay	(Visible when 115.01 Module 2 type = FDIO-01) See parameter 114.13 DI1 OFF delay.	0.00 s
115.13	DIO1 OFF delay	(Visible when 115.01 Module 2 type = FIO-01 or FIO-11) See parameter 114.13 DIO1 OFF delay.	0.0 s
115.14	DIO2 configuration	(Visible when 115.01 Module 2 type = FIO-01 or FIO-11) See parameter 114.14 DIO2 configuration.	Input
115.15	DIO2 filter gain	(Visible when 115.01 Module 2 type = FIO-11) See parameter 114.15 DIO2 filter gain.	7.5 us

No.	Name/Value	Description	Def/FbEq16
115.16	DIO2 output source	(Visible when 115.01 Module 2 type = FIO-01 or FIO-11) See parameter 114.16 DIO2 output source.	Not energized
115.17	DI2 ON delay	(Visible when 115.01 Module 2 type = FDIO-01) See parameter 114.17 DI2 ON delay.	0.00 s
115.17	DIO2 ON delay	(Visible when 115.01 Module 2 type = FIO-01 or FIO-11) See parameter 114.17 DIO2 ON delay.	0.0 s
115.18	DI2 OFF delay	(Visible when 115.01 Module 2 type = FDIO-01) See parameter 114.18 DI2 OFF delay.	0.00 s
115.18	DIO2 OFF delay	(Visible when 115.01 Module 2 type = FIO-01 or FIO-11) See parameter 114.18 DIO2 OFF delay.	0.0 s
115.19	DIO3 configuration	(Visible when 115.01 Module 2 type = FIO-01) See parameter 114.19 DIO3 configuration.	Input
115.19	AI supervision function	(Visible when 115.01 Module 2 type = FIO-11 or FAIO-01) See parameter 114.19 AI supervision function.	No action
115.20	AI supervision selection	(Visible when 115.01 Module 2 type = FIO-11 or FAIO-01) See parameter 114.20 AI supervision selection.	0000h
115.21	DIO3 output source	(Visible when 115.01 Module 2 type = FIO-01) See parameter 114.21 DIO3 output source.	Not energized
115.22	DI3 ON delay	(Visible when 115.01 Module 2 type = FDIO-01) See parameter 114.22 DI3 ON delay.	0.00 s
115.22	DIO3 ON delay	(Visible when 115.01 Module 2 type = FIO-01) See parameter 114.22 DIO3 ON delay.	0.0 s
115.22	AI force sel	(Visible when 115.01 Module 2 type = FIO-11 or FAIO-01) See parameter 114.22 AI force sel.	00000000h
115.23	DI3 OFF delay	(Visible when 115.01 Module 2 type = FDIO-01) See parameter 114.23 DI3 OFF delay.	0.00 s
115.23	DIO3 OFF delay	(Visible when 115.01 Module 2 type = FIO-01) See parameter 114.23 DIO3 OFF delay.	0.0 s
115.24	DIO4 configuration	(Visible when 115.01 Module 2 type = FIO-01) See parameter 114.24 DIO4 configuration.	Input
115.26	DIO4 output source	(Visible when 115.01 Module 2 type = FIO-01) See parameter 114.26 DIO4 output source.	Not energized
115.26	AI1 actual value	(Visible when 115.01 Module 2 type = FIO-11 or FAIO-01) See parameter 114.26 AI1 actual value.	-
115.27	DIO4 ON delay	(Visible when 115.01 Module 2 type = FIO-01) See parameter 114.27 DIO4 ON delay.	0.0 s
115.27	AI1 scaled value	(Visible when 115.01 Module 2 type = FIO-11 or FAIO-01) See parameter 114.27 AI1 scaled value.	-
115.28	DIO4 OFF delay	(Visible when 115.01 Module 2 type = FIO-01) See parameter 114.28 DIO4 OFF delay.	0.0 s
115.28	AI1 force data	(Visible when 115.01 Module 2 type = FIO-11 or FAIO-01) See parameter 114.28 AI1 force data.	
115.29	AI1 HW switch pos	(Visible when 115.01 Module 2 type = FIO-11 or FAIO-01) See parameter 114.29 AI1 HW switch pos.	-
115.30	AI1 unit selection	(Visible when 115.01 Module 2 type = FIO-11 or FAIO-01) See parameter 114.30 AI1 unit selection.	mA
115.31	RO status	(Visible when 115.01 Module 2 type = FIO-01 or FAIO-01) See parameter 114.31 RO status.	-
115.31	AI1 filter gain	(Visible when 115.01 Module 2 type = FIO-11 or FAIO-01) See parameter 114.31 AI1 filter gain.	No filtering
115.32	AI1 filter time	(Visible when 115.01 Module 2 type = FIO-11 or FAIO-01) See parameter 114.32 AI1 filter time.	0.040 s

No.	Name/Value	Description	Def/FbEq16
115.33	AI1 min	(Visible when 115.01 Module 2 type = FIO-11 or FAIO-01) See parameter 114.33 AI1 min.	0.000 mA or V
115.34	RO1 source	(Visible when 115.01 Module 2 type = FIO-01 or FDIO-01) See parameter 114.34 RO1 source.	Not energized
115.34	AI1 max	(Visible when 115.01 Module 2 type = FIO-11 or FAIO-01) See parameter 114.34 AI1 max.	10.000 mA or V
115.35	RO1 ON delay	(Visible when 115.01 Module 2 type = FIO-01 or FDIO-01) See parameter 114.35 RO1 ON delay.	0.0 s
115.35	AI1 scaled at AI1 min	(Visible when 115.01 Module 2 type = FIO-11 or FAIO-01) See parameter 114.35 AI1 scaled at AI1 min.	0.000
115.36	RO1 OFF delay	(Visible when 115.01 Module 2 type = FIO-01 or FDIO-01) See parameter 114.36 RO1 OFF delay.	0.0 s
115.36	AI1 scaled at AI1 max	(Visible when 115.01 Module 2 type = FIO-11 or FAIO-01) See parameter 114.36 AI1 scaled at AI1 max.	1500.0
115.37	RO2 source	(Visible when 115.01 Module 2 type = FIO-01 or FDIO-01) See parameter 114.37 RO2 source.	Not energized
115.38	RO2 ON delay	(Visible when 115.01 Module 2 type = FIO-01 or FDIO-01) See parameter 114.38 RO2 ON delay.	0.0 s
115.39	RO2 OFF delay	(Visible when 115.01 Module 2 type = FIO-01 or FDIO-01) See parameter 114.39 RO2 OFF delay.	0.0 s
115.41	AI2 actual value	(Visible when 115.01 Module 2 type = FIO-11 or FAIO-01) See parameter 114.41 AI2 actual value.	-
115.42	AI2 scaled value	(Visible when 115.01 Module 2 type = FIO-11 or FAIO-01) See parameter 114.42 AI2 scaled value.	-
115.43	AI2 force data	(Visible when 115.01 Module 2 type = FIO-11 or FAIO-01) See parameter 114.43 AI2 force data.	0.000 mA
115.44	AI2 HW switch pos	(Visible when 115.01 Module 2 type = FIO-11 or FAIO-01) See parameter 114.44 AI2 HW switch pos.	-
115.45	AI2 unit selection	(Visible when 115.01 Module 2 type = FIO-11 or FAIO-01) See parameter 114.45 AI2 unit selection.	mA
115.46	AI2 filter gain	(Visible when 115.01 Module 2 type = FIO-11 or FAIO-01) See parameter 114.46 AI2 filter gain.	No filtering
115.47	AI2 filter time	(Visible when 115.01 Module 2 type = FIO-11 or FAIO-01) See parameter 114.47 AI2 filter time.	0.100 s
115.48	AI2 min	(Visible when 115.01 Module 2 type = FIO-11 or FAIO-01) See parameter 114.48 AI2 min.	0.000 mA or V
115.49	AI2 max	(Visible when 115.01 Module 2 type = FIO-11 or FAIO-01) See parameter 114.49 AI2 max.	10.000 mA or V
115.50	AI2 scaled at AI2 min	(Visible when 115.01 Module 2 type = FIO-11 or FAIO-01) See parameter 114.50 AI2 scaled at AI2 min.	0.000
115.51	AI2 scaled at AI2 max	(Visible when 115.01 Module 2 type = FIO-11 or FAIO-01) See parameter 114.51 AI2 scaled at AI2 max.	1500.0
115.56	AI3 actual value	(Visible when 115.01 Module 2 type = FIO-11) See parameter 114.56 AI3 actual value.	-
115.57	AI3 scaled value	(Visible when 115.01 Module 2 type = FIO-11) See parameter 114.57 AI3 scaled value.	-
115.58	AI3 force data	(Visible when 115.01 Module 2 type = FIO-11) See parameter 114.58 AI3 force data.	0.000 mA
115.59	AI3 HW switch pos	(Visible when 115.01 Module 2 type = FIO-11) See parameter 114.59 AI3 HW switch pos.	-
115.60	AI3 unit selection	(Visible when 115.01 Module 2 type = FIO-11) See parameter 114.60 AI3 unit selection.	mA

No.	Name/Value	Description	Def/FbEq16
115.61	*AI3 filter gain*	*(Visible when 115.01 Module 2 type = FIO-11)* See parameter *114.61 AI3 filter gain*.	*No filtering*
115.62	*AI3 filter time*	*(Visible when 115.01 Module 2 type = FIO-11)* See parameter *114.62 AI3 filter time*.	0.100 s
115.63	*AI3 min*	*(Visible when 115.01 Module 2 type = FIO-11)* See parameter *114.63 AI3 min*.	0.000 mA or V
115.64	*AI3 max*	*(Visible when 115.01 Module 2 type = FIO-11)* See parameter *114.64 AI3 max*.	10.000 mA or V
115.65	*AI3 scaled at AI3 min*	*(Visible when 115.01 Module 2 type = FIO-11)* See parameter *114.65 AI3 scaled at AI3 min*.	0.000
115.66	*AI3 scaled at AI3 max*	*(Visible when 115.01 Module 2 type = FIO-11)* See parameter *114.66 AI3 scaled at AI3 max*.	1500.0
115.71	*AO force selection*	*(Visible when 115.01 Module 2 type = FIO-11* or *FAIO-01)* See parameter *114.71 AO force selection*.	00000000h
115.76	*AO1 actual value*	*(Visible when 115.01 Module 2 type = FIO-11* or *FAIO-01)* See parameter *114.76 AO1 actual value*.	-
115.77	*AO1 source*	*(Visible when 115.01 Module 2 type = FIO-11* or *FAIO-01)* See parameter *114.77 AO1 source*.	*Zero*
115.78	*AO1 force data*	*(Visible when 115.01 Module 2 type = FIO-11* or *FAIO-01)* See parameter *114.78 AO1 force data*.	0.000 mA
115.79	*AO1 filter time*	*(Visible when 115.01 Module 2 type = FIO-11* or *FAIO-01)* See parameter *114.79 AO1 filter time*.	0.100 s
115.80	*AO1 source min*	*(Visible when 115.01 Module 2 type = FIO-11* or *FAIO-01)* See parameter *114.80 AO1 source min*.	0.0
115.81	*AO1 source max*	*(Visible when 115.01 Module 2 type = FIO-11* or *FAIO-01)* See parameter *114.81 AO1 source max*.	1500.0
115.82	*AO1 out at AO1 src min*	*(Visible when 115.01 Module 2 type = FIO-11* or *FAIO-01)* See parameter *114.82 AO1 out at AO1 src min*.	0.000 mA
115.83	*AO1 out at AO1 src max*	*(Visible when 115.01 Module 2 type = FIO-11* or *FAIO-01)* See parameter *114.83 AO1 out at AO1 src max*.	20.000 mA
115.86	*AO2 actual value*	*(Visible when 115.01 Module 2 type = FAIO-01)* See parameter *114.86 AO2 actual value*.	-
115.87	*AO2 source*	*(Visible when 115.01 Module 2 type = FAIO-01)* See parameter *114.87 AO2 source*.	*Zero*
115.88	*AO2 force data*	*(Visible when 115.01 Module 2 type = FAIO-01)* See parameter *114.88 AO2 force data*.	0.000 mA
115.89	*AO2 filter time*	*(Visible when 115.01 Module 2 type = FAIO-01)* See parameter *114.89 AO2 filter time*.	0.100 s
115.90	*AO2 source min*	*(Visible when 115.01 Module 2 type = FAIO-01)* See parameter *114.90 AO2 source min*.	0.0
115.91	*AO2 source max*	*(Visible when 115.01 Module 2 type = FAIO-01)* See parameter *114.91 AO2 source max*.	100.0
115.92	*AO2 out at AO2 src min*	*(Visible when 115.01 Module 2 type = FAIO-01)* See parameter *114.92 AO2 out at AO2 src min*.	0.000 mA
115.93	*AO2 out at AO2 src max*	*(Visible when 115.01 Module 2 type = FAIO-01)* See parameter *114.93 AO2 out at AO2 src max*.	10.000 mA

116 Extension I/O module 3	Configuration of I/O extension module 1. See also section *Programmable I/O extensions* (page *26*). **Note:** The contents of the parameter group vary according to the selected I/O extension module type.	
116.01	*Module 3 type*	See parameter *114.01 Module 1 type*.	*None*
116.02	*Module 3 location*	See parameter *114.02 Module 1 location*.	*Slot 1*

No.	Name/Value	Description	Def/FbEq16
116.03	Module 3 status	See parameter 114.03 Module 1 status.	No option
116.05	DI status	(Visible when 116.01 Module 3 type = FDIO-01) See parameter 114.05 DI status.	-
116.05	DIO status	(Visible when 116.01 Module 3 type = FIO-01 or FIO-11) See parameter 114.05 DIO status.	-
116.06	DI delayed status	(Visible when 116.01 Module 3 type = FDIO-01) See parameter 114.06 DI delayed status.	-
116.06	DIO delayed status	(Visible when 116.01 Module 3 type = FIO-01 or FIO-11) See parameter 114.06 DIO delayed status.	-
116.08	DI filter time	(Visible when 116.01 Module 3 type = FDIO-01) See parameter 114.08 DI filter time.	10.0 ms
116.09	DIO1 configuration	(Visible when 116.01 Module 3 type = FIO-01 or FIO-11) See parameter 114.09 DIO1 configuration.	Input
116.10	DIO1 filter gain	(Visible when 116.01 Module 3 type = FIO-11) See parameter 114.10 DIO1 filter gain.	7.5 us
116.11	DIO1 output source	(Visible when 116.01 Module 3 type = FIO-01 or FIO-11) See parameter 114.11 DIO1 output source.	Not energized
116.12	DI1 ON delay	(Visible when 116.01 Module 3 type = FDIO-01) See parameter 114.12 DI1 ON delay.	0.00 s
116.12	DIO1 ON delay	(Visible when 116.01 Module 3 type = FIO-01 or FIO-11) See parameter 114.12 DIO1 ON delay.	0.0 s
116.13	DI1 OFF delay	(Visible when 116.01 Module 3 type = FDIO-01) See parameter 114.13 DI1 OFF delay.	0.00 s
116.13	DIO1 OFF delay	(Visible when 116.01 Module 3 type = FIO-01 or FIO-11) See parameter 114.13 DIO1 OFF delay.	0.0 s
116.14	DIO2 configuration	(Visible when 116.01 Module 3 type = FIO-01 or FIO-11) See parameter 114.14 DIO2 configuration.	Input
116.15	DIO2 filter gain	(Visible when 116.01 Module 3 type = FIO-11) See parameter 114.15 DIO2 filter gain.	7.5 us
116.16	DIO2 output source	(Visible when 116.01 Module 3 type = FIO-01 or FIO-11) See parameter 114.16 DIO2 output source.	Not energized
116.17	DI2 ON delay	(Visible when 116.01 Module 3 type = FDIO-01) See parameter 114.17 DI2 ON delay.	0.00 s
116.17	DIO2 ON delay	(Visible when 116.01 Module 3 type = FIO-01 or FIO-11) See parameter 114.17 DIO2 ON delay.	0.0 s
116.18	DI2 OFF delay	(Visible when 116.01 Module 3 type = FDIO-01) See parameter 114.18 DI2 OFF delay.	0.00 s
116.18	DIO2 OFF delay	(Visible when 116.01 Module 3 type = FIO-01 or FIO-11) See parameter 114.18 DIO2 OFF delay.	0.0 s
116.19	DIO3 configuration	(Visible when 116.01 Module 3 type = FIO-01) See parameter 114.19 DIO3 configuration.	Input
116.19	AI supervision function	(Visible when 116.01 Module 3 type = FIO-11 or FAIO-01) See parameter 114.19 AI supervision function.	No action
116.20	AI supervision selection	(Visible when 116.01 Module 3 type = FIO-11 or FAIO-01) See parameter 114.20 AI supervision selection.	0000h
116.21	DIO3 output source	(Visible when 116.01 Module 3 type = FIO-01) See parameter 114.21 DIO3 output source.	Not energized
116.22	DI3 ON delay	(Visible when 116.01 Module 3 type = FDIO-01) See parameter 114.22 DI3 ON delay.	0.00 s
116.22	DIO3 ON delay	(Visible when 116.01 Module 3 type = FIO-01) See parameter 114.22 DIO3 ON delay.	0.0 s

No.	Name/Value	Description	Def/FbEq16
116.22	AI force sel	(Visible when 116.01 Module 3 type = FIO-11 or FAIO-01) See parameter 114.22 AI force sel.	00000000h
116.23	DI3 OFF delay	(Visible when 116.01 Module 3 type = FDIO-01) See parameter 114.23 DI3 OFF delay.	0.00 s
116.23	DIO3 OFF delay	(Visible when 116.01 Module 3 type = FIO-01) See parameter 114.23 DIO3 OFF delay.	0.0 s
116.24	DIO4 configuration	(Visible when 116.01 Module 3 type = FIO-01) See parameter 114.24 DIO4 configuration.	Input
116.26	DIO4 output source	(Visible when 116.01 Module 3 type = FIO-01) See parameter 114.26 DIO4 output source.	Not energized
116.26	AI1 actual value	(Visible when 116.01 Module 3 type = FIO-11 or FAIO-01) See parameter 114.26 AI1 actual value.	-
116.27	DIO4 ON delay	(Visible when 116.01 Module 3 type = FIO-01) See parameter 114.27 DIO4 ON delay.	0.0 s
116.27	AI1 scaled value	(Visible when 116.01 Module 3 type = FIO-11 or FAIO-01) See parameter 114.27 AI1 scaled value.	-
116.28	DIO4 OFF delay	(Visible when 116.01 Module 3 type = FIO-01) See parameter 114.28 DIO4 OFF delay.	0.0 s
116.28	AI1 force data	(Visible when 116.01 Module 3 type = FIO-11 or FAIO-01) See parameter 114.28 AI1 force data.	-
116.29	AI1 HW switch pos	(Visible when 116.01 Module 3 type = FIO-11 or FAIO-01) See parameter 114.29 AI1 HW switch pos.	-
116.30	AI1 unit selection	(Visible when 116.01 Module 3 type = FIO-11 or FAIO-01) See parameter 114.30 AI1 unit selection.	mA
116.31	RO status	(Visible when 116.01 Module 3 type = FIO-01 or FDIO-01) See parameter 114.31 RO status.	-
116.31	AI1 filter gain	(Visible when 116.01 Module 3 type = FIO-11 or FAIO-01) See parameter 114.31 AI1 filter gain.	No filtering
116.32	AI1 filter time	(Visible when 116.01 Module 3 type = FIO-11 or FAIO-01) See parameter 114.32 AI1 filter time.	0.040 s
116.33	AI1 min	(Visible when 116.01 Module 3 type = FIO-11 or FAIO-01) See parameter 114.33 AI1 min.	0.000 mA or V
116.34	RO1 source	(Visible when 116.01 Module 3 type = FIO-01 or FDIO-01) See parameter 114.34 RO1 source.	Not energized
116.34	AI1 max	(Visible when 116.01 Module 3 type = FIO-11 or FAIO-01) See parameter 114.34 AI1 max.	10.000 mA or V
116.35	RO1 ON delay	(Visible when 116.01 Module 3 type = FIO-01 or FDIO-01) See parameter 114.35 RO1 ON delay.	0.0 s
116.35	AI1 scaled at AI1 min	(Visible when 116.01 Module 3 type = FIO-11 or FAIO-01) See parameter 114.35 AI1 scaled at AI1 min.	0.000
116.36	RO1 OFF delay	(Visible when 116.01 Module 3 type = FIO-01 or FDIO-01) See parameter 114.36 RO1 OFF delay.	0.0 s
116.36	AI1 scaled at AI1 max	(Visible when 116.01 Module 3 type = FIO-11 or FAIO-01) See parameter 114.36 AI1 scaled at AI1 max.	1500.0
116.37	RO2 source	(Visible when 116.01 Module 3 type = FIO-01 or FDIO-01) See parameter 114.37 RO2 source.	Not energized
116.38	RO2 ON delay	(Visible when 116.01 Module 3 type = FIO-01 or FDIO-01) See parameter 114.38 RO2 ON delay.	0.0 s
116.39	RO2 OFF delay	(Visible when 116.01 Module 3 type = FIO-01 or FDIO-01) See parameter 114.39 RO2 OFF delay.	0.0 s
116.41	AI2 actual value	(Visible when 116.01 Module 3 type = FIO-11 or FAIO-01) See parameter 114.41 AI2 actual value.	-

No.	Name/Value	Description	Def/FbEq16
116.42	AI2 scaled value	(Visible when 116.01 Module 3 type = FIO-11 or FAIO-01) See parameter 114.42 AI2 scaled value.	-
116.43	AI2 force data	(Visible when 116.01 Module 3 type = FIO-11 or FAIO-01) See parameter 114.43 AI2 force data.	0.000 mA
116.44	AI2 HW switch pos	(Visible when 116.01 Module 3 type = FIO-11 or FAIO-01) See parameter 114.44 AI2 HW switch pos.	-
116.45	AI2 unit selection	(Visible when 116.01 Module 3 type = FIO-11 or FAIO-01) See parameter 114.45 AI2 unit selection.	mA
116.46	AI2 filter gain	(Visible when 116.01 Module 3 type = FIO-11 or FAIO-01) See parameter 114.46 AI2 filter gain.	No filtering
116.47	AI2 filter time	(Visible when 116.01 Module 3 type = FIO-11 or FAIO-01) See parameter 114.47 AI2 filter time.	0.100 s
116.48	AI2 min	(Visible when 116.01 Module 3 type = FIO-11 or FAIO-01) See parameter 114.48 AI2 min.	0.000 mA or V
116.49	AI2 max	(Visible when 116.01 Module 3 type = FIO-11 or FAIO-01) See parameter 114.49 AI2 max.	10.000 mA or V
116.50	AI2 scaled at AI2 min	(Visible when 116.01 Module 3 type = FIO-11 or FAIO-01) See parameter 114.50 AI2 scaled at AI2 min.	0.000
116.51	AI2 scaled at AI2 max	(Visible when 116.01 Module 3 type = FIO-11 or FAIO-01) See parameter 114.51 AI2 scaled at AI2 max.	1500.0
116.56	AI3 actual value	(Visible when 116.01 Module 3 type = FIO-11) See parameter 114.56 AI3 actual value.	-
116.57	AI3 scaled value	(Visible when 116.01 Module 3 type = FIO-11) See parameter 114.57 AI3 scaled value.	-
116.58	AI3 force data	(Visible when 116.01 Module 3 type = FIO-11) See parameter 114.58 AI3 force data.	0.000 mA
116.59	AI3 HW switch pos	(Visible when 116.01 Module 3 type = FIO-11) See parameter 114.59 AI3 HW switch pos.	-
116.60	AI3 unit selection	(Visible when 116.01 Module 3 type = FIO-11) See parameter 114.60 AI3 unit selection.	mA
116.61	AI3 filter gain	(Visible when 116.01 Module 3 type = FIO-11) See parameter 114.61 AI3 filter gain.	No filtering
116.62	AI3 filter time	(Visible when 116.01 Module 3 type = FIO-11) See parameter 114.62 AI3 filter time.	0.100 s
116.63	AI3 min	(Visible when 116.01 Module 3 type = FIO-11) See parameter 114.63 AI3 min.	0.000 mA or V
116.64	AI3 max	(Visible when 116.01 Module 3 type = FIO-11) See parameter 114.64 AI3 max.	10.000 mA or V
116.65	AI3 scaled at AI3 min	(Visible when 116.01 Module 3 type = FIO-11) See parameter 114.65 AI3 scaled at AI3 min.	0.000
116.66	AI3 scaled at AI3 max	(Visible when 116.01 Module 3 type = FIO-11) See parameter 114.66 AI3 scaled at AI3 max.	1500.0
116.71	AO force selection	(Visible when 116.01 Module 3 type = FIO-11 or FAIO-01) See parameter 114.71 AO force selection.	00000000h
116.76	AO1 actual value	(Visible when 116.01 Module 3 type = FIO-11 or FAIO-01) See parameter 114.76 AO1 actual value.	-
116.77	AO1 source	(Visible when 116.01 Module 3 type = FIO-11 or FAIO-01) See parameter 114.77 AO1 source.	Zero
116.78	AO1 force data	(Visible when 116.01 Module 3 type = FIO-11 or FAIO-01) See parameter 114.78 AO1 force data.	0.000 mA
116.79	AO1 filter time	(Visible when 116.01 Module 3 type = FIO-11 or FAIO-01) See parameter 114.79 AO1 filter time.	0.100 s

No.	Name/Value	Description	Def/FbEq16
116.80	*AO1 source min*	*(Visible when 116.01 Module 3 type = FIO-11* or *FAIO-01)* See parameter *114.80 AO1 source min*.	0.0
116.81	*AO1 source max*	*(Visible when 116.01 Module 3 type = FIO-11* or *FAIO-01)* See parameter *114.81 AO1 source max*.	1500.0
116.82	*AO1 out at AO1 src min*	*(Visible when 116.01 Module 3 type = FIO-11* or *FAIO-01)* See parameter *114.82 AO1 out at AO1 src min*.	0.000 mA
116.83	*AO1 out at AO1 src max*	*(Visible when 116.01 Module 3 type = FIO-11* or *FAIO-01)* See parameter *114.83 AO1 out at AO1 src max*.	20.000 mA
116.86	*AO2 actual value*	*(Visible when 116.01 Module 3 type = FAIO-01)* See parameter *114.86 AO2 actual value*.	-
116.87	*AO2 source*	*(Visible when 116.01 Module 3 type = FAIO-01)* See parameter *114.87 AO2 source*.	*Zero*
116.88	*AO2 force data*	*(Visible when 116.01 Module 3 type = FAIO-01)* See parameter *114.88 AO2 force data*.	0.000 mA
116.89	*AO2 filter time*	*(Visible when 116.01 Module 3 type = FAIO-01)* See parameter *114.89 AO2 filter time*.	0.100 s
116.90	*AO2 source min*	*(Visible when 116.01 Module 3 type = FAIO-01)* See parameter *114.90 AO2 source min*.	0.0
116.91	*AO2 source max*	*(Visible when 116.01 Module 3 type = FAIO-01)* See parameter *114.91 AO2 source max*.	100.0
116.92	*AO2 out at AO2 src min*	*(Visible when 116.01 Module 3 type = FAIO-01)* See parameter *114.92 AO2 out at AO2 src min*.	0.000 mA
116.93	*AO2 out at AO2 src max*	*(Visible when 116.01 Module 3 type = FAIO-01)* See parameter *114.93 AO2 out at AO2 src max*.	10.000 mA

119 Operation mode		Selection of external control location sources and operating modes.	
119.03	*Parallel converter mode*	Disables one regenerative rectifier unit when there are two parallel-connected regenerative rectifier units in a line-up.	*Normal 6/12 pulse*
	Normal 6/12 pulse	If there are two regenerative rectifier units in a line-up, both of them are enabled. If there is only one regenerative rectifier unit in a line-up, this is the normal operating mode.	0
	6-pulse winding A	Only the first regenerative rectifier unit is in use; disables the second regenerative rectifier unit. Power modules of the first regenerative rectifier unit are connected to the first available optical channels on the BCU control unit.	1
	6-pulse winding B	Only the second regenerative rectifier unit is in use; disables the first regenerative rectifier unit.	2
119.11	*Ext1/Ext2 sel*	Selects the external control location EXT1/EXT2.	*EXT1*
	EXT1	EXT1 selected.	0
	EXT2	EXT2 selected.	1
	FBA A MCW bit 11	Control word bit 11 received through fieldbus interface A.	2
	DI1	Digital input DI1 (as indicated by *110.02 DI delayed status*, bit 0). **Note:** DI1 is reserved for temperature fault in the control program. Do not select it for any other use.	3
	DI2	Digital input DI2 (as indicated by *110.02 DI delayed status*, bit 1).	4
	DI3	Digital input DI3 (as indicated by *110.02 DI delayed status*, bit 2). **Note:** DI3 is reserved for main breaker/contactor fault in the control program. Do not select it for any other use.	5

No.	Name/Value	Description	Def/FbEq16
	DI4	Digital input DI4 (as indicated by *110.02 DI delayed status*, bit 3). **Note:** DI4 is reserved for auxiliary circuit breaker fault in the control program. Do not select it for any other use.	6
	DI5	Digital input DI5 (as indicated by *110.02 DI delayed status*, bit 4).	7
	DI6	Digital input DI6 (as indicated by *110.02 DI delayed status* bit 5).	8
	DIO1	Digital input/output DIO1 (as indicated by *111.02 DIO delayed status*, bit 0).	11
	DIO2	Digital input/output DIO2 (as indicated by *111.02 DIO delayed status*, bit 1).	12
	Other	Source selection (see *Terms and abbreviations* on page *39*).	-
119.17	*Local ctrl disable*	Enables/disables (or selects a source that enables/disables) local control. **WARNING!** Before disabling local control, ensure that the control panel is not needed for stopping the regenerative rectifier.	*No*
	No	Local control enabled.	0
	Yes	Local control disabled.	1

120 Start/stop		Start/stop and run/start enable signal source selection; charging settings.	
120.01	*Ext1 commands*	Selects the source of start and stop commands for external control location 1 (EXT1). **Note:** This parameter cannot be changed while the converter is running.	*In1 Start*
	Not selected	No start or stop command sources selected.	0
	In1 Start	The source of the start and stop commands is selected by parameter *120.03 Ext1 in1*. The state transitions of the source bit are interpreted as follows: **State of source (*120.03*)** / **Command** 0 -> 1 / Start 1 -> 0 / Stop	1
	In1P Start; In2 Stop	The sources of the start and stop commands are selected by parameters *120.03 Ext1 in1* and *120.04 Ext1 in2*. The state transitions of the source bits are interpreted as follows: **State of source 1 (*120.03*)** / **State of source 2 (*120.04*)** / **Command** 0 -> 1 / 1 / Start Any / 1 -> 0 / Stop Any / 0 / Stop	4
	Keypad / Control panel	The start and stop commands are taken from the control panel.	11
	Fieldbus A	The start and stop commands are taken from fieldbus adapter A.	12
	DDCS controller	The start and stop commands are taken from an external (DDCS) controller.	16

No.	Name/Value	Description	Def/FbEq16
120.02	*Ext1 start trigger*	Defines whether the start signal for external control location EXT1 is edge-triggered or level-triggered. **Note:** In case the settings of parameters *120.01* and *120.02* are in conflict, the setting of parameter *120.01* takes preference.	*Edge*
	Edge	The start signal is edge-triggered.	0
	Level	The start signal is level-triggered.	1
120.03	*Ext1 in1*	Selects source 1 for external control location EXT1. See parameter *120.01 Ext1 commands*.	*DI2*
	Off	0.	0
	On	1.	1
	DI1	Digital input DI1 (as indicated by *110.02 DI delayed status*, bit 0). **Note:** DI1 is reserved for temperature fault in the control program. Do not select it for any other use.	2
	DI2	Digital input DI2 (as indicated by *110.02 DI delayed status*, bit 1).	3
	DI3	Digital input DI3 (as indicated by *110.02 DI delayed status*, bit 2). **Note:** DI3 is reserved for main breaker/contactor fault in the control program. Do not select it for any other use.	4
	DI4	Digital input DI4 (as indicated by *110.02 DI delayed status*, bit 3). **Note:** DI4 is reserved for auxiliary circuit breaker fault in the control program. Do not select it for any other use.	5
	DI5	Digital input DI5 (as indicated by *110.02 DI delayed status*, bit 4).	6
	DI6	Digital input DI6 (as indicated by *110.02 DI delayed status* bit 5).	7
	DIO1	Digital input/output DIO1 (as indicated by *111.02 DIO delayed status*, bit 0).	10
	DIO2	Digital input /output DIO2 (as indicated by *111.02 DIO delayed status*, bit 1).	11
	Other	Source selection (see *Terms and abbreviations* on page *39*).	-
120.04	*Ext1 in2*	Selects source 2 for external control location EXT1. See parameter *120.01 Ext1 commands*. For the available selections, see parameter *120.03 Ext1 in1*.	*DI2*
120.06	*Ext2 commands*	Selects the source of start and stop commands for external control location 2 (EXT2). **Note:** This parameter cannot be changed while the converter is running.	*Not selected*
	Not selected	No start or stop command sources selected.	0
	In1 Start	The source of the start and stop commands is selected by parameter *120.08 Ext2 in1*. The state transitions of the source bit are interpreted as follows: **State of source (*120.08*)** / **Command** 0 -> 1 / Start 1 -> 0 / Stop	1

<table>
<tr><th>No.</th><th>Name/Value</th><th>Description</th><th>Def/FbEq16</th></tr>
<tr><td></td><td>In1P Start; In2 Stop</td><td>The sources of the start and stop commands are selected by parameters 120.08 Ext2 in1 and 120.09 Ext2 in2. The state transitions of the source bits are interpreted as follows:
<table>
<tr><th>State of source 1 (120.08)</th><th>State of source 2 (120.09)</th><th>Command</th></tr>
<tr><td>0 -> 1</td><td>1</td><td>Start</td></tr>
<tr><td>Any</td><td>1 -> 0</td><td>Stop</td></tr>
<tr><td>Any</td><td>0</td><td>Stop</td></tr>
</table></td><td>4</td></tr>
<tr><td></td><td>Keypad / Control panel</td><td>The start and stop commands are taken from the control panel.</td><td>11</td></tr>
<tr><td></td><td>Fieldbus A</td><td>The start and stop commands are taken from fieldbus adapter A.</td><td>12</td></tr>
<tr><td></td><td>DDCS controller</td><td>The start and stop commands are taken from an external (DDCS) controller.</td><td>16</td></tr>
<tr><td>120.07</td><td>Ext2 start trigger</td><td>Defines whether the start signal for external control location EXT2 is edge-triggered or level-triggered.
Note: In case the settings of parameters 120.06 and 120.07 are in conflict, the setting of parameter 120.06 takes preference.</td><td>Edge</td></tr>
<tr><td></td><td>Edge</td><td>The start signal is edge-triggered.</td><td>0</td></tr>
<tr><td></td><td>Level</td><td>The start signal is level-triggered.</td><td>1</td></tr>
<tr><td>120.08</td><td>Ext2 in1</td><td>Selects source 1 for external control location EXT2. See parameter 120.06 Ext2 commands.
For the available selections, see parameter 120.03 Ext1 in1.</td><td>Off</td></tr>
<tr><td>120.09</td><td>Ext2 in2</td><td>Selects source 2 for external control location EXT2. See parameter 120.06 Ext2 commands.
For the available selections, see parameter 120.03 Ext1 in1.</td><td>Off</td></tr>
<tr><td>120.12</td><td>Run enable 1</td><td>Selects the source of the external run enable signal. If the run enable signal is switched off, the regenerative rectifier will not start, or stops if running.
1 = Run enable.
Note: This parameter cannot be changed while the converter is running.</td><td>DI2</td></tr>
<tr><td></td><td>Off</td><td>0.</td><td>0</td></tr>
<tr><td></td><td>On</td><td>1.</td><td>1</td></tr>
<tr><td></td><td>DI1</td><td>Digital input DI1 (as indicated by 110.02 DI delayed status, bit 0).
Note: DI1 is reserved for temperature fault in the control program. Do not select it for any other use.</td><td>2</td></tr>
<tr><td></td><td>DI2</td><td>Digital input DI2 (as indicated by 110.02 DI delayed status, bit 1).</td><td>3</td></tr>
<tr><td></td><td>DI3</td><td>Digital input DI3 (as indicated by 110.02 DI delayed status, bit 2).
Note: DI3 is reserved for main breaker/contactor fault in the control program. Do not select it for any other use.</td><td>4</td></tr>
<tr><td></td><td>DI4</td><td>Digital input DI4 (as indicated by 110.02 DI delayed status, bit 3).
Note: DI4 is reserved for auxiliary circuit breaker fault in the control program. Do not select it for any other use.</td><td>5</td></tr>
<tr><td></td><td>DI5</td><td>Digital input DI5 (as indicated by 110.02 DI delayed status, bit 4).</td><td>6</td></tr>
<tr><td></td><td>DI6</td><td>Digital input DI6 (as indicated by 110.02 DI delayed status bit 5).</td><td>7</td></tr>
</table>

No.	Name/Value	Description	Def/FbEq16
	DIO1	Digital input/output DIO1 (as indicated by *111.02 DIO delayed status*, bit 0).	10
	DIO2	Digital input/output DIO2 (as indicated by *111.02 DIO delayed status*, bit 1).	11
	DIIL	DIIL input (*110.02 DI delayed status*, bit 15).	33
	Other	Source selection (see *Terms and abbreviations* on page *39*).	-
120.19	*Enable start signal*	Selects the source for the start enable signal. 1 = Start enable. With the signal switched off, the regenerative rectifier will not start. (Switching the signal off while the regenerative rectifier is running will not stop it.)	*On*
	Off	0.	0
	On	1.	1
	DI1	Digital input DI1 (as indicated by *110.02 DI delayed status*, bit 0). **Note:** DI1 is reserved for temperature fault in the control program. Do not select it for any other use.	2
	DI2	Digital input DI2 (as indicated by *110.02 DI delayed status*, bit 1).	3
	DI3	Digital input DI3 (as indicated by *110.02 DI delayed status*, bit 2). **Note:** DI3 is reserved for main breaker/contactor fault in the control program. Do not select it for any other use.	4
	DI4	Digital input DI4 (as indicated by *110.02 DI delayed status*, bit 3). **Note:** DI4 is reserved for auxiliary circuit breaker fault in the control program. Do not select it for any other use.	5
	DI5	Digital input DI5 (as indicated by *110.02 DI delayed status*, bit 4).	6
	DI6	Digital input DI6 (as indicated by *110.02 DI delayed status* bit 5).	7
	DIO1	Digital input/output DIO1 (as indicated by *111.02 DIO delayed status*, bit 0).	10
	DIO2	Digital input/output DIO2 (as indicated by *111.02 DIO delayed status*, bit 1).	11
	DIIL	DIIL input (*110.02 DI delayed status*, bit 15).	30
	Other	Source selection (see *Terms and abbreviations* on page *39*).	-
120.20	*MCB2 feedback source*	Selects the source for the main circuit breaker feedback of the second regenerative rectifier unit when there are two parallel-connected regenerative rectifier units in a line-up.	*DI3*
	Active (false)	0.	0
	Inactive (true)	1.	1
	DIIL	DIIL input (*110.02 DI delayed status*, bit 15).	2
	DI1	Digital input DI1 (as indicated by *110.02 DI delayed status*, bit 0). **Note:** DI1 is reserved for temperature fault in the control program. Do not select it for any other use.	3
	DI2	Digital input DI2 (as indicated by *110.02 DI delayed status*, bit 1).	4
	DI3	Digital input DI3 (as indicated by *110.02 DI delayed status*, bit 2). **Note:** DI3 is reserved for main breaker/contactor fault in the control program. Do not select it for any other use.	5

No.	Name/Value	Description	Def/FbEq16
	DI4	Digital input DI4 (as indicated by *110.02 DI delayed status*, bit 3). **Note:** DI4 is reserved for auxiliary circuit breaker fault in the control program. Do not select it for any other use.	6
	DI5	Digital input DI5 (as indicated by *110.02 DI delayed status*, bit 4).	7
	DI6	Digital input DI6 (as indicated by *110.02 DI delayed status* bit 5).	8
	DIO1	Digital input/output DIO1 (as indicated by *111.02 DIO delayed status*, bit 0).	9
	DIO2	Digital input/output DIO2 (as indicated by *111.02 DIO delayed status*, bit 1).	10
	Other	Source selection (see *Terms and abbreviations* on page *39*).	-
120.21	*Delay for MCB DI3 supervision*	Start and stop delay for supervision of main circuit breaker DI3 feedback. After the delay a fault is given in start and stop states if the command and the feedback do not match.	1.00 s
	0.00 … 8.00 s	Start and stop delay for supervision.	100 = 1 s
120.22	*Max current for MCB closing*	Defines the maximum charging current for the charging function. When the charging current is below the value defined with this parameter, the main circuit breaker can be closed. (It will be closed only if also the remaining criteria is met.) The limit is given as a percent value of the nominal current of the regenerative rectifier. See also section *Charging* on page *23*. 10% = 10% of the nominal current.	5%
	0…10%	Current value in percent.	1 = 1%
120.23	*Max DC charging time*	Defines the maximum charging time for the charging function. See section *Charging* on page *23*.	6.00 s
	0.00 … 10.00 s	Maximum charging time	100 = 1 s
120.25	*MCB closing level*	Defines the DC link voltage level for the charging function. When the measured DC link voltage exceeds the level, the main contactor/breaker can be closed.	80%
	20 … 100%	Intermediate circuit DC voltage level in percent of the nominal	1 = 1%
120.26	*Maximum dU/dt*	Defines the maximum DC link voltage change rate (dU/dt) for the charging function. When the change rate falls below this maximum change rate limit, the control program can close the main contactor/breaker. The change rate is measured in 10 ms sample interval. See section *Charging* on page *23*.	50 V/s
	0 … 200 V/s	Maximum dU/dt change	1 = 1 V/s
120.27	*Start delay*	Defines the start delay that delay the setting of the charged state after the main circuit breaker has closed. Without charged state the start command is blocked from the modulator.	0.65 s
	0.00 … 10.00 s	Start delay.	100 = 1 s
120.28	*MCB relay timing*	Defines a contactor change-over delay time for the charging function. This is the delay between switching of the charging contactor and switching on the main contactor/breaker. The value can be positive or negative. The negative value defines the time when both contactors are closed. State ‘charged’ is set after charging contactor has opened and possible start delay parameter time has ended. See section *Charging* on page *23*.	-0.20 s
	-6.00 … 6.00 s	Delay between charging contactor opening and main circuit contactor closing.	100 = 1 s

No.	Name/Value	Description	Def/FbEq16
120.29	*Diode mode*	Enables diode mode, and the unit acts as a pure diode bridge. Diode mode blocks the start command for modulator after charging. In diode mode, the modulation is stopped and the main contactor is closed. Using diode mode reduces the number of main contactor operations.	*Off*
	Off	Diode mode is disabled.	0
	On	Diode mode is enabled.	1
	DI1	Digital input DI1 (*110.02 DI delayed status*, bit 0).	2
	DI2	Digital input DI2 (*110.02 DI delayed status*, bit 1).	3
	DI3	Digital input DI3 (*110.02 DI delayed status*, bit 2). **Note:** DI3 is reserved for main breaker/contactor fault in the control program. Do not select it for any other use.	4
	DI4	Digital input DI4 (*110.02 DI delayed status*, bit 3).	5
	DI5	Digital input DI5 (*110.02 DI delayed status*, bit 4).	6
	DI6	Digital input DI6 (*110.02 DI delayed status*, bit 5).	7
	DIO1	Digital input/output DIO1 (*111.02 DIO delayed status*, bit 0).	10
	DIO2	Digital input/output DIO2 (*111.02 DIO delayed status*, bit 1).	11
	Other	Source selection (see *Terms and abbreviations* on page *39*).	-
120.45	*Charging counter disable*	Disables/enables charging counter. Charging counter can be disabled in case the regenerative rectifier unit is equipped with charging resistors that withstand unlimited amount of charging cycles. **WARNING!** Make sure that the charging resistors are not overheated.	*No*
	No	Enables charging counter.	0
	Yes	Disables charging counter.	1
120.50	*Charging overload event sel*	Selects the event type for charging overload event. Charging overload is indicated in *106.18 Start inhibit status word* bit 9 if *Warning* and *No* is selected. See section *Charging* on page *23*.	*Fault*
	Fault	The regenerative rectifier trips on fault *3E09 Charging count*.	0
	Warning	The regenerative rectifier generates a warning *AE85 Charging count*.	1
	No action	No action taken.	2

121 Start/stop mode		Start and stop modes; emergency stop mode and signal source selection.	
121.04	*Emergency stop mode*	Selects the way the regenerative rectifier unit is stopped when an emergency stop command is received. The source of the emergency stop signal is selected with parameter *121.05 Emergency stop source*.	*Stop and warning*
	Stop and warning	Stop RRU and show emergency stop warning.	0
	Warning	Show emergency stop warning but do not stop RRU.	1
	Fault	Stop RRU and create an emergency stop fault.	2
121.05	*Emergency stop source*	Selects the source of the emergency stop signal. 0 = Emergency stop active 1 = Normal operation **Note:** This parameter cannot be changed while the regenerative rectifier unit is running.	*Inactive (true)*
	Active (false)	0.	0
	Inactive (true)	1.	1
	DIIL	DIIL input (*110.02 DI delayed status*, bit 15).	2
	DI1	Digital input DI1 (*110.02 DI delayed status*, bit 0).	3

No.	Name/Value	Description	Def/FbEq16
	DI2	Digital input DI2 (*110.02 DI delayed status*, bit 1).	4
	DI3	Digital input DI3 (*110.02 DI delayed status*, bit 2).	5
	DI4	Digital input DI4 (*110.02 DI delayed status*, bit 3).	6
	DI5	Digital input DI5 (*110.02 DI delayed status*, bit 4).	7
	DI6	Digital input DI6 (*110.02 DI delayed status*, bit 5).	8
	DIO1	Digital input/output DIO1 (*111.02 DIO delayed status*, bit 0).	11
	DIO2	Digital input/output DIO2 (*111.02 DIO delayed status*, bit 1).	12
	Other	Source selection (see *Terms and abbreviations* on page *11*).	-
131 Fault functions		Settings that define the behavior of the unit upon fault situations.	
131.01	*External event 1 source*	Defines the source of external event 1. See also parameter *131.02 External event 1 type*.	*Inactive (true)*
	Active (false)	0	0
	Inactive (true)	1	1
	DIIL	Digital input DIIL (as indicated by *110.02 DI delayed status*, bit 15).	2
	DI1	Digital input DI1 (as indicated by *110.02 DI delayed status*, bit 0). **Note:** DI1 is reserved for temperature fault in the control program. Do not select it for any other use.	3
	DI2	Digital input DI2 (as indicated by *110.02 DI delayed status*, bit 1).	4
	DI3	Digital input DI3 (as indicated by *110.02 DI delayed status*, bit 2). **Note:** DI3 is reserved for main breaker/contactor fault in the control program. Do not select it for any other use.	5
	DI4	Digital input DI4 (as indicated by *110.02 DI delayed status*, bit 3). **Note:** DI4 is reserved for auxiliary circuit breaker fault in the control program. Do not select it for any other use.	6
	DI5	Digital input DI5 (as indicated by *110.02 DI delayed status*, bit 4).	7
	DI6	Digital input DI6 (as indicated by *110.02 DI delayed status* bit 5).	8
	DIO1	Digital input/output DIO1 (as indicated by *111.02 DIO delayed status*, bit 0).	11
	DIO2	Digital input/output DIO2 (as indicated by *111.02 DIO delayed status*, bit 1).	12
	Other	Source selection (see *Terms and abbreviations* on page *39*).	-
131.02	*External event 1 type*	Selects the type of external event 1.	*Fault*
	Fault	The external event generates a fault.	0
	Warning	The external event generates a warning.	1
	Warning/Fault	If the regenerative rectifier unit is running, the external event generates a fault. Otherwise, the event generates a warning.	3
131.03	*External event 2 source*	Defines the source of external event 2. See also parameter *131.04 External event 2 type*. For the selections, see parameter *131.01 External event 1 source*.	*Inactive (true)*
131.04	*External event 2 type*	Selects the type of external event 2.	*Fault*
	Fault	The external event generates a fault.	0

No.	Name/Value	Description	Def/FbEq16
	Warning	The external event generates a warning.	1
	Warning/Fault	If the regenerative rectifier unit is running, the external event generates a fault. Otherwise, the event generates a warning.	3
131.05	*External event 3 source*	Defines the source of external event 3. See also parameter *131.06 External event 3 type*. For the selections, see parameter *131.01 External event 1 source*.	*Inactive (true)*
131.06	*External event 3 type*	Selects the type of external event 3.	*Fault*
	Fault	The external event generates a fault.	0
	Warning	The external event generates a warning.	1
	Warning/Fault	If the regenerative rectifier unit is running, the external event generates a fault. Otherwise, the event generates a warning.	3
131.07	*External event 4 source*	Defines the source of external event 4. See also parameter *131.08 External event 4 type*. For the selections, see parameter *131.01 External event 1 source*.	*Inactive (true)*
131.08	*External event 4 type*	Selects the type of external event 4.	*Fault*
	Fault	The external event generates a fault.	0
	Warning	The external event generates a warning.	1
	Warning/Fault	If the regenerative rectifier unit is running, the external event generates a fault. Otherwise, the event generates a warning.	3
131.09	*External event 5 source*	Defines the source of external event 5. See also parameter *131.10 External event 5 type*. For the selections, see parameter *131.01 External event 1 source*.	*Inactive (true)*
131.10	*External event 5 type*	Selects the type of external event 5.	*Fault*
	Fault	The external event generates a fault.	0
	Warning	The external event generates a warning.	1
	Warning/Fault	If the regenerative rectifier unit is running, the external event generates a fault. Otherwise, the event generates a warning.	3
131.11	*Fault reset selection*	Selects the source of an external fault reset signal. The signal resets the regenerative rectifier after a fault trip if the cause of the fault no longer exists. 0 -> 1 = Reset **Note:** A fault reset from the fieldbus interface is always observed regardless of this parameter.	*DI6*
	Off	0	0
	On	1	1
	DI1	Digital input DI1 (as indicated by *110.02 DI delayed status*, bit 0). **Note:** DI1 is reserved for temperature fault in the control program. Do not select it for any other use.	2
	DI2	Digital input DI2 (as indicated by *110.02 DI delayed status*, bit 1).	3
	DI3	Digital input DI3 (as indicated by *110.02 DI delayed status*, bit 2). **Note:** DI3 is reserved for main breaker/contactor fault in the control program. Do not select it for any other use.	4

No.	Name/Value	Description	Def/FbEq16
	DI4	Digital input DI4 (as indicated by *110.02 DI delayed status*, bit 3). **Note:** DI4 is reserved for auxiliary circuit breaker fault in the control program. Do not select it for any other use.	5
	DI5	Digital input DI5 (as indicated by *110.02 DI delayed status*, bit 4).	6
	DI6	Digital input DI6 (as indicated by *110.02 DI delayed status* bit 5).	7
	DIO1	Digital input/output DIO1 (as indicated by *111.02 DIO delayed status*, bit 0).	10
	DIO2	Digital input/output DIO2 (as indicated by *111.02 DIO delayed status*, bit 1).	11
	Other	Source selection (see *Terms and abbreviations* on page *39*).	-
131.12	*Autoreset selection*	Selects faults that are automatically reset. The parameter is a 16-bit word with each bit corresponding to a fault type. Whenever a bit is set to 1, the corresponding fault is automatically reset. **Note:** The autoreset function is only available in external control. **WARNING!** The regenerative rectifier starts automatically after the autoreset if Start, Run enable and Start enable signals are on and the control program detects no fault. Before you activate the function, make sure that no dangerous situations can occur. The function resets the regenerative rectifier automatically and continues operation after a fault. If you select an external source for the start command and it is on, the regenerative rectifier will start immediately after fault reset. The bits of the binary number correspond to the following faults:	0000h

Bit	Fault
0	Overcurrent
1	Overvoltage
2	Undervoltage
3…9	Reserved
10	User fault (selected by parameter *131.13 User selectable fault*)
11	External fault 1 (from source selected by parameter *131.01 External event 1 source*)
12	External fault 2 (from source selected by parameter *131.03 External event 2 source*)
13	External fault 3 (from source selected by parameter *131.05 External event 3 source*)
14	External fault 4 (from source selected by parameter *131.07 External event 4 source*)
15	External fault 5 (from source selected by parameter *131.09 External event 5 source*)

	0000h…FFFFh	Automatic reset configuration word.	1 = 1
131.13	*User selectable fault*	Defines the fault that can be automatically reset using parameter *131.12 Autoreset selection*, bit 10. The faults are listed in chapter *Fault tracing*.	0000h
	0000h…FFFFh	Fault code. See chapter *Fault tracing*.	-
131.14	*Number of trials*	Defines the number of automatic fault resets the regenerative rectifier performs within the time defined by parameter *131.15 Total trials time*.	0
	0…5	Number of automatic resets.	-
131.15	*Total trials time*	Defines the time for the automatic reset function. See parameter *131.14 Number of trials*.	30.0
	1.0 … 600.0 s	Time for automatic resets.	10 = 1 s

No.	Name/Value	Description	Def/FbEq16
131.16	*Delay time*	Defines the time that the regenerative rectifier will wait after a fault before attempting an automatic reset. See parameter *131.12 Autoreset selection*.	0.0 s
	0.0 … 120.0 s	Autoreset delay.	10 = 1 s
131.28	*Ext earth leakage signal source*	Defines the source of earth leakage fault indication. Signal value is decoded as follows: 0 = Earth leakage fault 1 = No earth leakage fault.	*Inactive (true)*
	Active (false)	0. Earth leakage fault	0
	Inactive (true)	1. No earth leakage fault	1
	DIIL	Digital input DIIL (as indicated by *110.02 DI delayed status*, bit 15).	2
	DI1	Digital input DI1 (as indicated by *110.02 DI delayed status*, bit 0). **Note:** DI1 is reserved for temperature fault in the control program. Do not select it for any other use.	3
	DI2	Digital input DI2 (as indicated by *110.02 DI delayed status*, bit 1).	4
	DI3	Digital input DI3 (as indicated by *110.02 DI delayed status*, bit 2). **Note:** DI3 is reserved for main breaker/contactor fault in the control program. Do not select it for any other use.	5
	DI4	Digital input DI4 (as indicated by *110.02 DI delayed status*, bit 3). **Note:** DI4 is reserved for auxiliary circuit breaker fault in the control program. Do not select it for any other use.	6
	DI5	Digital input DI5 (as indicated by *110.02 DI delayed status*, bit 4).	7
	DI6	Digital input DI6 (as indicated by *110.02 DI delayed status* bit 5).	8
	DIO1	Digital input/output DIO1 (as indicated by *111.02 DIO delayed status*, bit 0).	11
	DIO2	Digital input/output DIO2 (as indicated by *111.02 DIO delayed status*, bit 1).	12
	Other	Source selection (see *Terms and abbreviations* on page *39*).	-
131.29	*Ext earth leakage action*	Selects how the regenerative rectifier reacts when an external earth leakage is detected.	*Fault*
	Warning	The regenerative rectifier generates a warning *AE87 Ext earth leakage*.	0
	Fault	The regenerative rectifier trips on a fault *2E08 Ext earth leakage*.	1
131.32	*Aux circuit breaker fault source*	Activates/inactivates the status monitoring function of the auxiliary circuit switch/breaker(s), and defines the source for the monitored signal. Status of the monitored signal and implication: 1 = Breaker is closed -> no fault 0 = Breaker is open -> fault trip **Note:** This parameter is not for main circuit breaker.	*DI4*
	Active (false)	Auxiliary circuit breaker fault	0
	Inactive (true)	No auxiliary circuit breaker fault	1
	DIIL	Digital input DIIL (as indicated by *110.02 DI delayed status*, bit 15).	2

No.	Name/Value	Description	Def/FbEq16
	DI1	Digital input DI1 (as indicated by *110.02 DI delayed status*, bit 0). **Note:** DI1 is reserved for temperature fault in the control program. Do not select it for any other use.	3
	DI2	Digital input DI2 (as indicated by *110.02 DI delayed status*, bit 1).	4
	DI3	Digital input DI3 (as indicated by *110.02 DI delayed status*, bit 2). **Note:** DI3 is reserved for main breaker/contactor fault in the control program. Do not select it for any other use.	5
	DI4	Digital input DI4 (as indicated by *110.02 DI delayed status*, bit 3). **Note:** DI4 is reserved for auxiliary circuit breaker fault in the control program. Do not select it for any other use.	6
	DI5	Digital input DI5 (as indicated by *110.02 DI delayed status*, bit 4).	7
	DI6	Digital input DI6 (as indicated by *110.02 DI delayed status* bit 5).	8
	DIO1	Digital input/output DIO1 (as indicated by *111.02 DIO delayed status*, bit 0).	11
	DIO2	Digital input/output DIO2 (as indicated by *111.02 DIO delayed status*, bit 1).	12
	Other	Source selection (see *Terms and abbreviations* on page *39*).	-
131.33	*Cabinet temperature fault source*	Activates/inactivates the monitoring for the cabinet thermal switch, and defines the source for the monitored signal. If the monitoring detects an overtemperature, the regenerative rectifier trips to fault *4E06 Cabinet temperature fault*. Status of the monitored signal and implication: 1 = Temperature is normal -> no fault 0 = Overtemperature -> fault trip	*DI1*
	Active (false)	Monitoring function is active.	0
	Inactive (true)	Monitoring function is inactive.	1
	DIIL	Monitoring function is active and it reads the status indication through DIIL (*110.02 DI delayed status*, bit 15).	2
	DI1	Monitoring function is active and it reads the status indication through DI1 (*110.02 DI delayed status*, bit 0).	3
	DI2	Monitoring function is active and it reads the status indication through DI2 (*110.02 DI delayed status*, bit 1).	4
	DI3	Monitoring function is active and it reads the status indication through DI3 (*110.02 DI delayed status*, bit 2).	5
	DI4	Monitoring function is active and it reads the status indication through DI4 (*110.02 DI delayed status*, bit 3).	6
	DI5	Monitoring function is active and it reads the status indication through DI5 (*110.02 DI delayed status*, bit 4).	7
	DI6	Monitoring function is active and it reads the status indication through DI6 (*110.02 DI delayed status*, bit 5).	8
	DIO1	Monitoring function is active and it reads the status indication through DIO1 (*111.02 DIO delayed status*, bit 0).	11
	DIO2	Monitoring function is active and it reads the status indication through DIO2 (*111.02 DIO delayed status*, bit 1).	12
	Other	Source selection (see *Terms and abbreviations* on page *39*).	-

No.	Name/Value	Description	Def/FbEq16
131.34	*Cabinet temperature supervision*	Selects whether there is a delay in monitoring the parameter *131.33 Cabinet temperature fault source*. If this parameter is set to *When modulating*, the monitoring is started after the modulation has started. Otherwise there is no delay for the monitoring.	*When modulating*
	Always	There is no delay for the monitoring.	0
	When modulating	Cabinet temperature monitoring is started after the modulation has started.	1
131.35	*Main fan fault function*	Selects how the regenerative rectifier reacts when a main fan fault is detected.	*Fault*
	Fault	The regenerative rectifier trips on a fault *5E00 Fan*.	0
	Warning	The regenerative rectifier generates a warning *AE73 Fan*.	1
	No action	No action taken.	2
131.38	*Fuse trip fault source*	Activates/inactivates the monitoring for the fuse trip, and defines the source for the monitored signal. If the monitoring detects a fuse trip, the regenerative rectifier trips to fault *5E1A Fuse trip*. Status of the monitored signal and implication: 1 = No fault 0 = Fault.	*Inactive (true)*
	Active (false)	Monitoring function is active.	0
	Inactive (true)	Monitoring function is inactive.	1
	DIIL	Monitoring function is active and it reads the status indication through DIIL (*110.02 DI delayed status*, bit 15).	2
	DI1	Monitoring function is active and it reads the status indication through DI1 (*110.02 DI delayed status*, bit 0).	3
	DI2	Monitoring function is active and it reads the status indication through DI2 (*110.02 DI delayed status*, bit 1).	4
	DI3	Monitoring function is active and it reads the status indication through DI3 (*110.02 DI delayed status*, bit 2).	5
	DI4	Monitoring function is active and it reads the status indication through DI4 (*110.02 DI delayed status*, bit 3).	6
	DI5	Monitoring function is active and it reads the status indication through DI5 (*110.02 DI delayed status*, bit 4).	7
	DI6	Monitoring function is active and it reads the status indication through DI6 (*110.02 DI delayed status*, bit 5).	8
	DIO1	Monitoring function is active and it reads the status indication through DIO1 (*111.02 DIO delayed status*, bit 0).	11
	DIO2	Monitoring function is active and it reads the status indication through DIO2 (*111.02 DIO delayed status*, bit 1).	12
	Other	Source selection (see *Terms and abbreviations* on page *39*).	-
131.39	*Brake chopper fault source*	Activates/inactivates the monitoring for the brake chopper fault, and defines the source for the monitored signal. If the monitoring detects a brake chopper fault, the regenerative rectifier trips to fault *5E1B Brake chopper*. Monitoring is active only when the regenerative rectifier is running. Status of the monitored signal and implication: 1 = No fault 0 = Fault.	*Inactive (true)*
	Active (false)	Monitoring function is active.	0
	Inactive (true)	Monitoring function is inactive.	1
	DIIL	Monitoring function is active and it reads the status indication through DIIL (*110.02 DI delayed status*, bit 15).	2
	DI1	Monitoring function is active and it reads the status indication through DI1 (*110.02 DI delayed status*, bit 0).	3

No.	Name/Value	Description	Def/FbEq16
	DI2	Monitoring function is active and it reads the status indication through DI2 (*110.02 DI delayed status*, bit 1).	4
	DI3	Monitoring function is active and it reads the status indication through DI3 (*110.02 DI delayed status*, bit 2).	5
	DI4	Monitoring function is active and it reads the status indication through DI4 (*110.02 DI delayed status*, bit 3).	6
	DI5	Monitoring function is active and it reads the status indication through DI5 (*110.02 DI delayed status*, bit 4).	7
	DI6	Monitoring function is active and it reads the status indication through DI6 (*110.02 DI delayed status*, bit 5).	8
	DIO1	Monitoring function is active and it reads the status indication through DIO1 (*111.02 DIO delayed status*, bit 0).	11
	DIO2	Monitoring function is active and it reads the status indication through DIO2 (*111.02 DIO delayed status*, bit 1).	12
	Other	Source selection (see *Terms and abbreviations* on page *39*).	-
131.40	*Disable warning messages*	Selects warnings to be suppressed. The parameter is a 16-bit word with each bit corresponding to a warning. Whenever a bit is set to 1, the corresponding warning is suppressed. The bits of this binary number correspond to the following warnings:	0000b

Bit	Name
0	Reserved.
1	Phase order (BCU control units only)
2	Reserved.
3	Reserved.
4	CU (Control unit) battery
5…15	Reserved.

	0000h…FFFFh	Warning suppression word.	1 = 1
131.55	*Ext I/O comm loss event*	Selects how the regenerative rectifier unit reacts when the communication to an I/O extension module fails.	*Fault*
	No action	No action taken.	0
	Warning	The regenerative rectifier unit generates a warning.	1
	Fault	The regenerative rectifier unit trips on a fault *7E10 Ext I/O comm loss*.	2

133 Generic timer & counter		Configuration of timers and counters. See also section *Maintenance timers and counters* (page *31*).	
133.01	*Counter status*	Displays the maintenance timer/counter status word, indicating which maintenance timers/counters have exceeded their limits. This parameter is read-only.	-

Bit	Name	Description
0	On-time1	1 = On-time timer 1 has reached its preset limit.
1	On-time2	1 = On-time timer 2 has reached its preset limit.
2	Edge 1	1 = Signal edge counter 1 has reached its preset limit.
3	Edge 2	1 = Signal edge counter 2 has reached its preset limit.
4	Value 1	1 = Value counter 1 has reached its preset limit.
5	Value 2	1 = Value counter 2 has reached its preset limit.
6…15	Reserved	

	0000h…FFFFh	Maintenance time/counter status word.	1 = 1

No.	Name/Value	Description	Def/FbEq16
133.10	*On-time 1 act*	Reading of on-time timer 1. Can be reset from the Drive composer PC tool, or from the control panel by keeping Reset depressed for over 3 seconds.	-
	0 … 4294967295 s	Reading of on-time timer 1.	1 = 1 s
133.11	*On-time 1 limit*	Sets the warning limit for on-time timer 1.	0 s
	0 … 4294967295 s	Warning limit for on-time counter 1.	1 = 1 s
133.12	*On-time 1 func*	Configures on-time timer 1. This timer runs whenever the signal selected by parameter *133.13 On-time 1 src* is on. After the limit set by *133.11 On-time 1 limit* is reached, the warning specified by *133.14 On-time 1 warn sel* is given (if enabled by this parameter), and the timer reset. The current value of the timer is readable from parameter *133.10 On-time 1 act*. Bit 0 of *133.01 Counter status* indicates that the time has exceeded the limit.	0000b

Bit	Function
0	Counter mode 0 = Loop: If warning is enabled by bit 1, it stays active only for 10 seconds 1 = Saturate: If warning is enabled by bit 1, it stays active until reset
1	Warning enable 0 = Disable: No warning is given when the limit is reached 1 = Enable: A warning is given when the limit is reached
2…15	Reserved

	0000h…FFFFh	On-time timer 1 configuration word.	1 = 1
133.13	*On-time 1 src*	Selects the signal to be monitored by on-time timer 1.	*False*
	False	Constant 0.	0
	True	Constant 1.	1
	RO1	Bit 0 of *110.21 RO status* (page *54*).	2
	Other	Source selection (see *Terms and abbreviations* on page *11*).	-
133.14	*On-time 1 warn sel*	Selects the optional warning message for on-time timer 1.	*On-time 1*
	On-time 1	*AE45 On-time 1*.	0
	Device clean	*AE4B Device clean warning*.	6
	Add cool fan	*AE4F Additional cooling fan warning*.	7
	Cabinet fan	*AE4D Cabinet fan warning*.	8
	DC-capacitor	*AE4C DC capacitor warning*.	9
133.20	*On-time 2 act*	Reading of on-time timer 2. Can be reset from the Drive composer PC tool, or from the control panel by keeping Reset depressed for over 3 seconds.	-
	0 … 4294967295 s	Reading of on-time timer 2.	1 = 1 s
133.21	*On-time 2 limit*	Sets the warning limit for on-time timer 2.	0 s
	0 … 4294967295 s	Warning limit for on-time counter 2.	1 = 1 s

No.	Name/Value	Description	Def/FbEq16
133.22	On-time 2 func	Configures on-time timer 2. This timer runs whenever the signal selected by parameter 133.23 On-time 2 src is on. After the limit set by 133.21 On-time 2 limit is reached, the warning specified by 133.24 On-time 2 warn sel is given (if enabled by this parameter), and the timer reset. The current value of the timer is readable from parameter 133.20 On-time 2 act. Bit 1 of 133.01 Counter status indicates that the time has exceeded the limit.	0000b

Bit	Function
0	Counter mode 0 = Loop: If warning is enabled by bit 1, it stays active only for 10 seconds 1 = Saturate: If warning is enabled by bit 1, it stays active until reset
1	Warning enable 0 = Disable: No warning is given when the limit is reached 1 = Enable: A warning is given when the limit is reached
2…15	Reserved

	0000h…FFFFh	On-time timer 2 configuration word.	1 = 1
133.23	On-time 2 src	Selects the signal to be monitored by on-time timer 2.	False
	False	Constant 0.	0
	True	Constant 1.	1
	RO1	Bit 0 of 110.21 RO status (page 54).	2
	Other	Source selection (see Terms and abbreviations on page 11).	-
133.24	On-time 2 warn sel	Selects the optional warning message for on-time timer 2.	On-time 2
	On-time 2	AE46 On-time 2.	1
	Device clean	AE4B Device clean warning.	6
	Add cool fan	AE4F Additional cooling fan warning.	7
	Cabinet fan	AE4D Cabinet fan warning.	8
	DC-capacitor	AE4C DC capacitor warning.	9
133.30	Edge count 1 act	Reading of signal edge counter 1. Can be reset from the Drive composer PC tool, or from the control panel by keeping Reset depressed for over 3 seconds.	-
	0…4294967295	Reading of signal edge counter 1.	1 = 1
133.31	Edge count 1 limit	Sets the warning limit for signal edge counter 1.	0
	0…4294967295	Warning limit for signal edge counter 1.	1 = 1

No.	Name/Value	Description	Def/FbEq16
133.32	*Edge count 1 func*	Configures signal edge counter 1. This counter is incremented every time the signal selected by parameter *133.33 Edge count 1 src* switches on or off (or either, depending on the setting of this parameter). A divisor may be applied to the count (see *133.34 Edge count 1 div*). After the limit set by *133.31 Edge count 1 limit* is reached, the warning specified by *133.35 Edge count 1 warn sel* is given (if enabled by this parameter), and the counter reset. The current value of the counter is readable from parameter *133.30 Edge count 1 act*. Bit 2 of *133.01 Counter status* indicates that the count has exceeded the limit.	0000b

Bit	Function
0	Counter mode 0 = Loop: If warning is enabled by bit 1, it stays active only for 10 seconds 1 = Saturate: If warning is enabled by bit 1, it stays active until reset
1	Warning enable 0 = Disable: No warning is given when the limit is reached 1 = Enable: A warning is given when the limit is reached
2	Count rising edge 0 = Disable: Rising edges are not counted 1 = Enable: Rising edges are counted
3	Count falling edge 0 = Disable: Falling edges are not counted 1 = Enable: Falling edges are counted
4…15	Reserved

	0000h…FFFFh	Edge counter 1 configuration word.	1 = 1
133.33	*Edge count 1 src*	Selects the signal to be monitored by signal edge counter 1.	*False*
	False	Constant 0.	0
	True	Constant 1.	1
	RO1	Bit 0 of *110.21 RO status* (page *54*).	2
	Other	Source selection (see *Terms and abbreviations* on page *11*).	-
133.34	*Edge count 1 div*	Defines a divisor for signal edge counter 1. Determines how many signal edges increment the counter by 1.	1
	1…4294967295	Divisor for signal edge counter 1.	1= 1
133.35	*Edge count 1 warn sel*	Selects the optional warning message for signal edge counter 1.	*Edge count 1*
	Edge count 1	*AE47 Edge counter 1*.	2
	Main contactor	*AE43 Main contactor warning*.	11
	Output relay	*AE40 Output relay warning*.	12
	Supply unit starts	*AE41 Supply unit starts warning*.	13
	Power ups	*AE42 Power ups warning*.	14
	DC-charge	*AE44 DC charge warning*.	15
133.40	*Edge count 2 act*	Reading of signal edge counter 2. Can be reset from the Drive composer PC tool, or from the control panel by keeping Reset depressed for over 3 seconds.	-
	0…4294967295	Reading of signal edge counter 2.	1 = 1
133.41	*Edge count 2 limit*	Sets the warning limit for signal edge counter 2.	0
	0…4294967295	Warning limit for signal edge counter 2.	1 = 1

No.	Name/Value	Description	Def/FbEq16
133.42	Edge count 2 func	Configures signal edge counter 2. This counter is incremented every time the signal selected by parameter 133.43 Edge count 2 src switches on or off (or either, depending on the setting of this parameter). A divisor may be applied to the count (see 133.44 Edge count 2 div). After the limit set by 133.41 Edge count 2 limit is reached, the warning specified by 133.45 Edge count 2 warn sel is given (if enabled by this parameter), and the counter reset. The current value of the counter is readable from parameter 133.40 Edge count 2 act. Bit 3 of 133.01 Counter status indicates that the count has exceeded the limit.	0000b

Bit	Function
0	Counter mode 0 = Loop: If warning is enabled by bit 1, it stays active only for 10 seconds 1 = Saturate: If warning is enabled by bit 1, it stays active until reset
1	Warning enable 0 = Disable: No warning is given when the limit is reached 1 = Enable: A warning is given when the limit is reached
2	Count rising edge 0 = Disable: Rising edges are not counted 1 = Enable: Rising edges are counted
3	Count falling edge 0 = Disable: Falling edges are not counted 1 = Enable: Falling edges are counted
4…15	Reserved

	0000h…FFFFh	Edge counter 2 configuration word.	1 = 1
133.43	Edge count 2 src	Selects the signal to be monitored by signal edge counter 2.	False
	False	0.	0
	True	1.	1
	RO1	Bit 0 of 110.21 RO status (page 54).	2
	Other	Source selection (see Terms and abbreviations on page 11).	-
133.44	Edge count 2 div	Divisor for signal edge counter 2. Determines how many signal edges increment the counter by 1.	1
	1…4294967295	Divisor for signal edge counter 2.	1 = 1
133.45	Edge count 2 warn sel	Selects the optional warning message for signal edge counter 2.	Edge count 2
	Edge count 2	AE48 Edge counter 2.	3
	Main contactor	AE43 Main contactor warning.	11
	Output relay	AE40 Output relay warning.	12
	Supply unit starts	AE41 Supply unit starts warning.	13
	Power ups	AE42 Power ups warning.	14
	DC-charge	AE44 DC charge warning.	15
133.50	Value count 1 act	Reading of value counter 1. Can be reset from the Drive composer PC tool, or from the control panel by keeping Reset depressed for over 3 seconds.	-
	-2147483008 … 2147483008	Reading of value counter 1.	1 = 1
133.51	Value count 1 limit	Sets the warning limit for value counter 1.	0
	-2147483008 … 2147483008	Warning limit for value counter 1.	1 = 1

No.	Name/Value	Description	Def/FbEq16
133.52	*Value count 1 func*	Configures value counter 1. The counter calculates its actual value (*133.50*) by integrating the monitored value (*133.53*) with respect to time. A divisor may be applied to the count (see *133.54 Value count 1 div*). When the actual value exceeds the limit set by parameter *133.51 Value count 1 limit*, the warning specified by *133.55 Value count 1 warn sel* is given (if enabled by this parameter). The signal is sampled at 1-second intervals. Note that the scaled (see the "*Def/FbEq16*" column at the signal in question) value is used. The current value of the counter is readable from parameter *133.50 Value count 1 act*. Bit 4 of *133.01 Counter status* indicates that the count has exceeded the limit.	0000b
	0000h…FFFFh	Value counter 1 configuration word.	1 = 1
133.53	*Value count 1 src*	Selects the signal to be monitored by value counter 1.	*Not selected*
	Not selected	None.	0
	Other	The value is taken from another parameter.	-
133.54	*Value count 1 div*	Divisor for value counter 1. The value of the monitored signal is divided by this value before integration.	1.000
	0.001 … 2147483.000	Divisor for value counter 1.	1 = 1
133.55	*Value count 1 warn sel*	Selects the warning message for value counter 1.	*Value 1*
	Value 1	*AE49 Value counter 1*.	4
133.60	*Value count 2 act*	Reading of value counter 2. Can be reset from the Drive composer PC tool, or from the control panel by keeping Reset depressed for over 3 seconds.	-
	-2147483008 … 2147483008	Reading of value counter 2.	1 = 1
133.61	*Value count 2 limit*	Sets the warning limit for value counter 2.	0
	-2147483008 … 2147483008	Warning limit for value counter 2.	1 = 1

Bit	Function
0	Counter mode 0 = Loop: If warning is enabled by bit 1, it stays active only for 10 seconds 1 = Saturate: If warning is enabled by bit 1, it stays active until reset
1	Warning enable 0 = Disable: No warning is given when the limit is reached 1 = Enable: A warning is given when the limit is reached
2…15	Reserved

No.	Name/Value	Description	Def/FbEq16
133.62	Value count 2 func	Configures value counter 2. The counter calculates its actual value (133.60) by integrating the monitored value (133.63) with respect to time. A divisor may be applied to the count (see 133.64 Value count 2 div). When the actual value exceeds the limit set by parameter 133.61 Value count 2 limit, the warning specified by 133.65 Value count 2 warn sel is given (if enabled by this parameter). The signal is sampled at 1-second intervals. Note that the scaled (see the "Def/FbEq16" column at the signal in question) value is used. The current value of the counter is readable from parameter 133.60 Value count 2 act. Bit 5 of 133.01 Counter status indicates that the count has exceeded the limit. **Bit / Function** 0: Counter mode 0 = Loop: If warning is enabled by bit 1, it stays active only for 10 seconds 1 = Saturate: If warning is enabled by bit 1, it stays active until reset 1: Warning enable 0 = Disable: No warning is given when the limit is reached 1 = Enable: A warning is given when the limit is reached 2…15: Reserved	0000b
	0000h…FFFFh	Value counter 2 configuration word.	1 = 1
133.63	Value count 2 src	Selects the signal to be monitored by value counter 2.	Not selected
	Not selected	None.	0
	Other	The value is taken from another parameter.	-
133.64	Value count 2 div	Divisor for value counter 2. The value of the monitored signal is divided by this value before integration.	1.000
	0.001 … 2147483.000	Divisor for value counter 1.	1 = 1
133.65	Value count 2 warn sel	Selects the warning message for value counter 2.	Value 2
	Value 2	AE4A Value counter 2.	5

136 Load analyzer		Peak value and amplitude logger settings. See also section Load analyzer (page 32).	
136.01	PVL signal source	Selects the signal to be monitored by the peak value logger. The signal is filtered using the filtering time specified by parameter 136.02 PVL filter time. The peak value is stored, along with other pre-selected signals at the time, into parameters 136.10…136.15. The peak value logger can be reset using parameter 136.09 Reset loggers. The date and time of the last reset are stored into parameters 136.16 and 136.17 respectively.	Line current
	Zero	None (peak value logger disabled).	0
	DC voltage	DC voltage, 101.01 DC voltage	1
	Grid voltage	Grid voltage, 101.09 Grid voltage	2
	Power	Power, 101.12 Power	3
	Line current	Line current, 101.02 Line current	4
	Line current %	Line current %, 101.03 Line current %	5
	Power %	Power %, 101.13 Power %	6
	Converter temperature %	Converter temperature %, 105.11 Converter temperature %	7
	Ambient temperature	Ambient temperature, 101.70 Ambient temperature percent	8

No.	Name/Value	Description	Def/FbEq16
	Other	Source selection (see *Terms and abbreviations* on page *11*).	-
136.02	*PVL filter time*	Peak value logger filtering time. See parameter *136.01 PVL signal source*.	2.00 s
	0.00 … 120.00 s	Peak value logger filtering time.	100 = 1 s
136.06	*AL2 signal source*	Selects the signal to be monitored by amplitude logger 2. The signal is sampled at 200 ms intervals. The results are displayed by parameters *136.40*…*136.49*. Each parameter represents an amplitude range, and shows what portion of the samples fall within that range. The signal value corresponding to 100% is defined by parameter *136.07 AL2 signal scaling*. Amplitude logger 2 can be reset using parameter *136.09 Reset loggers*. The date and time of the last reset are stored into parameters *136.50* and *136.51* respectively. For the selections, see parameter *136.01 PVL signal source*.	*Ambient temperature*
136.07	*AL2 signal scaling*	Defines the signal value that corresponds to 100% amplitude.	100.00
	0.00 … 32767.00	Signal value corresponding to 100%.	1 = 1
136.09	*Reset loggers*	Resets the peak value logger and/or amplitude logger 2. (Amplitude logger 1 cannot be reset.)	*Done*
	Done	Reset completed or not requested (normal operation).	0
	All	Reset both the peak value logger and amplitude logger 2.	1
	PVL	Reset the peak value logger.	2
	AL2	Reset amplitude logger 2.	3
136.10	*PVL peak value*	Peak value recorded by the peak value logger.	0.00
	-32768.00 … 32767.00	Peak value.	1 = 1
136.11	*PVL peak date*	The date on which the peak value was recorded.	-
	-	Peak occurrence date.	-
136.12	*PVL peak time*	The time at which the peak value was recorded.	-
	-	Peak occurrence time.	-
136.13	*PVL current at peak*	Line current at the moment the peak value was recorded.	0.00 A
	-32768.00 … 32767.00 A	Line current at peak.	1 = 1 A
136.14	*PVL DC voltage at peak*	Voltage in the intermediate DC circuit at the moment the peak value was recorded.	0.00 V
	0.00 … 2000.00 V	DC voltage at peak.	10 = 1 V
136.15	*PVL power at peak*	Power at the moment the peak value was recorded. See parameter *101.12 Power*.	0.0 kW
	-32768.0 … 32767.0 kW	Power at peak.	
136.16	*PVL reset date*	The date on which the peak value logger was last reset.	-
	-	Last reset date of the peak value logger.	-
136.17	*PVL reset time*	The time at which the peak value logger was last reset.	-
	-	Last reset time of the peak value logger.	-
136.20	*AL1 below 10%*	Percentage of samples recorded by amplitude logger 1 that fall between 0 and 10%.	0.00%
	0.00 … 100.00%	Amplitude logger 1 samples between 0 and 10%.	1 = 1%
136.21	*AL1 10 to 20%*	Percentage of samples recorded by amplitude logger 1 that fall between 10 and 20%.	0.00%
	0.00 … 100.00%	Amplitude logger 1 samples between 10 and 20%.	1 = 1%
136.22	*AL1 20 to 30%*	Percentage of samples recorded by amplitude logger 1 that fall between 20 and 30%.	0.00%
	0.00 … 100.00%	Amplitude logger 1 samples between 20 and 30%.	1 = 1%

No.	Name/Value	Description	Def/FbEq16
136.23	*AL1 30 to 40%*	Percentage of samples recorded by amplitude logger 1 that fall between 30 and 40%.	0.00%
	0.00 … 100.00%	Amplitude logger 1 samples between 30 and 40%.	1 = 1%
136.24	*AL1 40 to 50%*	Percentage of samples recorded by amplitude logger 1 that fall between 40 and 50%.	0.00%
	0.00 … 100.00%	Amplitude logger 1 samples between 40 and 50%.	1 = 1%
136.25	*AL1 50 to 60%*	Percentage of samples recorded by amplitude logger 1 that fall between 50 and 60%.	0.00%
	0.00 … 100.00%	Amplitude logger 1 samples between 50 and 60%.	1 = 1%
136.26	*AL1 60 to 70%*	Percentage of samples recorded by amplitude logger 1 that fall between 60 and 70%.	0.00%
	0.00 … 100.00%	Amplitude logger 1 samples between 60 and 70%.	1 = 1%
136.27	*AL1 70 to 80%*	Percentage of samples recorded by amplitude logger 1 that fall between 70 and 80%.	0.00%
	0.00 … 100.00%	Amplitude logger 1 samples between 70 and 80%.	1 = 1%
136.28	*AL1 80 to 90%*	Percentage of samples recorded by amplitude logger 1 that fall between 80 and 90%.	0.00%
	0.00 … 100.00%	Amplitude logger 1 samples between 80 and 90%.	1 = 1%
136.29	*AL1 over 90%*	Percentage of samples recorded by amplitude logger 1 that exceed 90%.	0.00%
	0.00 … 100.00%	Amplitude logger 1 samples over 90%.	1 = 1%
136.40	*AL2 below 10%*	Percentage of samples recorded by amplitude logger 2 that fall between 0 and 10%.	0.00%
	0.00 … 100.00%	Amplitude logger 2 samples between 0 and 10%.	1 = 1%
136.41	*AL2 10 to 20%*	Percentage of samples recorded by amplitude logger 2 that fall between 10 and 20%.	0.00%
	0.00 … 100.00%	Amplitude logger 2 samples between 10 and 20%.	1 = 1%
136.42	*AL2 20 to 30%*	Percentage of samples recorded by amplitude logger 2 that fall between 20 and 30%.	0.00%
	0.00 … 100.00%	Amplitude logger 2 samples between 20 and 30%.	1 = 1%
136.43	*AL2 30 to 40%*	Percentage of samples recorded by amplitude logger 2 that fall between 30 and 40%.	0.00%
	0.00 … 100.00%	Amplitude logger 2 samples between 30 and 40%.	1 = 1%
136.44	*AL2 40 to 50%*	Percentage of samples recorded by amplitude logger 2 that fall between 40 and 50%.	0.00%
	0.00 … 100.00%	Amplitude logger 2 samples between 40 and 50%.	1 = 1%
136.45	*AL2 50 to 60%*	Percentage of samples recorded by amplitude logger 2 that fall between 50 and 60%.	0.00%
	0.00 … 100.00%	Amplitude logger 2 samples between 50 and 60%.	1 = 1%
136.46	*AL2 60 to 70%*	Percentage of samples recorded by amplitude logger 2 that fall between 60 and 70%.	0.00%
	0.00 … 100.00%	Amplitude logger 2 samples between 60 and 70%.	1 = 1%
136.47	*AL2 70 to 80%*	Percentage of samples recorded by amplitude logger 2 that fall between 70 and 80%.	0.00%
	0.00 … 100.00%	Amplitude logger 2 samples between 70 and 80%.	1 = 1%
136.48	*AL2 80 to 90%*	Percentage of samples recorded by amplitude logger 2 that fall between 80 and 90%.	0.00%
	0.00 … 100.00%	Amplitude logger 2 samples between 80 and 90%.	1 = 1%
136.49	*AL2 over 90%*	Percentage of samples recorded by amplitude logger 2 that exceed 90%.	0.00%
	0.00 … 100.00%	Amplitude logger 2 samples over 90%.	1 = 1%

No.	Name/Value	Description	Def/FbEq16
136.50	*AL2 reset date*	The date on which amplitude logger 2 was last reset.	-
	-	Last reset date of amplitude logger 2.	-
136.51	*AL2 reset time*	The time at which amplitude logger 2 was last reset.	-
	-	Last reset time of amplitude logger 2.	-

147 Data storage		Parameters that can be written to and read from by using source and target settings of other parameters. Note that there are different storage parameters for different data types. See section *Data storage parameters* on page *29*.	
147.01	*Data storage 1 real32*	Data storage parameter 1.	0.000
	32768.000… 32767.000	32-bit data.	-
147.02	*Data storage 2 real32*	Data storage parameter 2.	0.000
	32768.000… 32767.000	32-bit data.	-
147.03	*Data storage 3 real32*	Data storage parameter 3.	0.000
	32768.000… 32767.000	32-bit data.	-
147.04	*Data storage 4 real32*	Data storage parameter 4.	0.000
	32768.000… 32767.000	32-bit data.	-
147.05	*Data storage 5 real32*	Data storage parameter 5.	0.000
	32768.000… 32767.000	32-bit data.	-
147.06	*Data storage 6 real32*	Data storage parameter 6.	0.000
	32768.000… 32767.000	32-bit data.	-
147.07	*Data storage 7 real32*	Data storage parameter 7.	0.000
	32768.000… 32767.000	32-bit data.	-
147.08	*Data storage 8 real32*	Data storage parameter 8.	0.000
	32768.000… 32767.000	32-bit data.	-
147.11	*Data storage 1 int32*	Data storage parameter 9.	0
	-2147483648… 2147483647	32-bit data.	-
147.12	*Data storage 2 int32*	Data storage parameter 10.	0
	-2147483648… 2147483647	32-bit data.	-
147.13	*Data storage 3 int32*	Data storage parameter 11.	0
	-2147483648… 2147483647	32-bit data.	-
147.14	*Data storage 4 int32*	Data storage parameter 12.	0
	-2147483648… 2147483647	32-bit data.	-

No.	Name/Value	Description	Def/FbEq16
147.15	Data storage 5 int32	Data storage parameter 13.	0
	-2147483648… 2147483647	32-bit data.	-
147.16	Data storage 6 int32	Data storage parameter 14.	0
	-2147483648… 2147483647	32-bit data.	-
147.17	Data storage 7 int32	Data storage parameter 15.	0
	-2147483648… 2147483647	32-bit data.	-
147.18	Data storage 8 int32	Data storage parameter 16.	0
	-2147483648… 2147483647	32-bit data.	-
147.21	Data storage 1 int16	Data storage parameter 17.	0
	-32768…32767	16-bit data.	1 = 1
147.22	Data storage 2 int16	Data storage parameter 18.	0
	-32768…32767	16-bit data.	1 = 1
147.23	Data storage 3 int16	Data storage parameter 19.	0
	-32768…32767	16-bit data.	1 = 1
147.24	Data storage 4 int16	Data storage parameter 20.	0
	-32768…32767	16-bit data.	1 = 1
147.25	Data storage 5 int16	Data storage parameter 21.	0
	-32768…32767	16-bit data.	1 = 1
147.26	Data storage 6 int16	Data storage parameter 22.	0
	-32768…32767	16-bit data.	1 = 1
147.27	Data storage 7 int16	Data storage parameter 23.	0
	-32768…32767	16-bit data.	1 = 1
147.28	Data storage 8 int16	Data storage parameter 24.	0
	-32768…32767	16-bit data.	1 = 1

149 Panel port communication		Communication settings for the control panel port on the regenerative rectifier.	
149.01	Node ID number	Defines the node ID of the regenerative rectifier. All devices connected to the same panel bus/link must have a dedicated node ID. **Note:** After setting this parameter, validate the change by setting the parameter 149.06 Refresh settings to Configure.	2
	1…32	Node ID.	1 = 1
149.03	Baud rate	Defines the transfer rate of the link. **Note:** After setting this parameter, validate the change by setting the parameter 149.06 Refresh settings to Configure.	230.4 kbps
	38.4 kbps	38.4 kbit/s.	1
	57.6 kbps	57.6 kbit/s.	2
	86.4 kbps	86.4 kbit/s.	3
	115.2 kbps	115.2 kbit/s.	4
	230.4 kbps	230.4 kbit/s.	5
149.04	Communication loss time	Sets a time-out for control panel (or PC tool) communication. If a communication break lasts longer than the time-out, the action specified by parameter 149.05 Communication loss action is taken.	10.0 s
	0.3 … 3000.0 s	Panel/PC tool communication time-out.	10 = 1 s

No.	Name/Value	Description	Def/FbEq16
149.05	*Communication loss action*	Selects how the regenerative rectifier reacts to a control panel (or PC tool) communication break. **Note:** After setting this parameter, validate the change by setting the parameter *149.06 Refresh settings* to *Configure*.	*Fault*
	No action	Communication break does not cause any actions.	0
	Fault	Regenerative rectifier trips on fault *7E01 Panel loss* and the unit stops.	1
149.06	*Refresh settings*	Applies the settings of parameters *149.01*…*149.05*. **Note:** Refreshing may cause a communication break, so reconnecting may be required.	*Done*
	Done	Refresh done or not requested.	0
	Configure	Refresh parameters *149.01*…*149.05*. The value reverts automatically to *Done*.	1

150 FBA		Fieldbus communication configuration.	
150.01	*FBA A enable*	Enables/disables communication between the regenerative rectifier and fieldbus adapter A, and specifies the slot the adapter is installed into.	*Disable*
	Disable	Communication between regenerative rectifier and fieldbus adapter A disabled.	0
	Option slot 1	Communication between regenerative rectifier and fieldbus adapter A enabled. The adapter is in slot 1.	1
	Option slot 2	Communication between regenerative rectifier and fieldbus adapter A enabled. The adapter is in slot 2.	2
	Option slot 3	Communication between regenerative rectifier and fieldbus adapter A enabled. The adapter is in slot 3.	3
150.02	*FBA A comm loss func*	Selects how the regenerative rectifier reacts upon a fieldbus communication break. The time delay is defined by parameter *150.03 FBA A comm loss t out*.	*No action*
	No action	Communication break detection disabled.	0
	Fault	Communication break detection active. Upon a communication break, the regenerative rectifier unit trips on a communication fault.	1
	Fault always	The regenerative rectifier trips on a communication fault even though no control is expected from the fieldbus.	4
	Warning	The regenerative rectifier generates a communication warning even though no control is expected from the fieldbus.	5
150.03	*FBA A comm loss t out*	Defines the time delay before the action defined by parameter *150.02 FBA A comm loss func* is taken. Time count starts when the communication link fails to update the message.	0.3 s
	0.1 … 6553.5 s	Time delay.	10 = 1 s
150.07	*FBA A act1 type*	Selects the type and scaling of actual value 1 transmitted to the fieldbus network through fieldbus adapter A.	*Transparent*
	Transparent	No scaling is applied.	1
	General	Generic actual value without a specific unit.	2
150.08	*FBA A act2 type*	Selects the type and scaling of actual value 2 transmitted to the fieldbus network through fieldbus adapter A. For the selections, see parameter *150.07 FBA A act1 type*.	*Transparent*
150.10	*FBA A act1 transparent source*	Selects the type of actual value 1 transmitted to the fieldbus network through fieldbus adapter A.	*Not selected*
	Not selected	No source selected.	-
	Other	The value is taken from another parameter.	-

No.	Name/Value	Description	Def/FbEq16
150.11	FBA A act2 transparent source	Selects the type of actual value 2 transmitted to the fieldbus network through fieldbus adapter A.	Not selected
	Not selected	No source selected.	-
	Other	The value is taken from another parameter.	-
150.12	FBA A debug mode	Enables the display of raw (unmodified) data received from and sent to fieldbus adapter A in parameters 150.13…150.18. Note that the changes made take effect only after reboot or setting the parameter 151.27 FBA A par refresh to Configure. This functionality should only be used for debugging.	Disable
	Disable	Display of raw data from fieldbus adapter A disabled.	0
	Fast	Debug mode is enabled. Cyclical data update is as fast as possible which increases the CPU load on the regenerative rectifier.	1
150.13	FBA A control word	Displays the control word received from fieldbus adapter A. For the commands assigned to each bit, see chapter Fieldbus control through a fieldbus adapter.	-
	00000000h … FFFFFFFFh	Control word received from fieldbus adapter A.	1 = 1
150.16	FBA A status word	Displays the status word sent to fieldbus adapter A. For the commands assigned to each bit, see chapter Fieldbus control through a fieldbus adapter.	-
	00000000h … FFFFFFFFh	Status word sent to fieldbus adapter A.	1 = 1
150.17	FBA A actual value 1	Displays raw actual value ACT1 sent to fieldbus adapter A.	-
	-2147483648 … 2147483647	Raw ACT1 sent to fieldbus adapter A.	1 = 1
150.18	FBA A actual value 2	Displays raw actual value ACT2 sent to fieldbus adapter A.	-
	-2147483648 … 2147483647	Raw ACT2 sent to fieldbus adapter A.	1 = 1
150.21	FBA A timelevel sel	Selects the communication speed for the fieldbus adapter A. In general, lower speeds reduce CPU load. The table below shows the read/write intervals for cyclic and acyclic data with each parameter setting. **Selection** / **Cyclic*** / **Acyclic**** Monitoring / 10 ms / 10 ms Normal / 2 ms / 10 ms Fast / 500 µs / 2 ms Very fast / 250 µs / 500 µs *Cyclic data consists of fieldbus Control and Status words, Act1 and Act2. **Acyclic data consists of the parameter data mapped to parameter groups 152 FBA A data in and 153 FBA A data out.	Normal
	Normal	Normal speed.	0
	Fast	Fast speed.	1
	Very fast	Very fast speed.	2
	Monitoring	Slow speed. Optimized for PC tool communication and monitoring usage.	3

No.	Name/Value	Description	Def/FbEq16
150.31	*FBA B enable*	Enables/disables communication between the regenerative rectifier and fieldbus adapter B, and specifies the slot the adapter is installed into.	*Disable*
	Disable	Communication between regenerative rectifier and fieldbus adapter B disabled.	0
	Option slot 1	Communication between regenerative rectifier and fieldbus adapter B enabled. The adapter is in slot 1.	1
	Option slot 2	Communication between regenerative rectifier and fieldbus adapter B enabled. The adapter is in slot 2.	2
	Option slot 3	Communication between regenerative rectifier and fieldbus adapter B enabled. The adapter is in slot 3.	3
150.32	*FBA B comm loss func*	Selects how the regenerative rectifier reacts upon a fieldbus communication break. The time delay is defined by parameter *150.33 FBA B comm loss timeout*.	*No action*
	No action	Communication break detection disabled.	0
	Fault	Communication break detection active. Upon a communication break, the regenerative rectifier unit trips on a communication fault.	1
	Fault always	The regenerative rectifier trips on a communication fault even though no control is expected from the fieldbus.	4
	Warning	The regenerative rectifier generates a communication warning even though no control is expected from the fieldbus.	5
150.33	*FBA B comm loss timeout*	Defines the time delay before the action defined by parameter *150.32 FBA B comm loss func* is taken. Time count starts when the communication link fails to update the message.	0.3 s
	0.1 … 6553.5 s	Time delay.	10 = 1 s
150.37	*FBA B act1 type*	Selects the type and scaling of actual value 1 transmitted to the fieldbus network through fieldbus adapter B.	*Transparent*
	Transparent	No scaling is applied.	1
	General	Generic actual value without a specific unit.	2
150.38	*FBA B act2 type*	Selects the type and scaling of actual value 2 transmitted to the fieldbus network through fieldbus adapter B. For the selections, see parameter *150.37 FBA B act1 type*.	*Transparent*
150.39	*FBA B SW transparent source*	Selects the source of the fieldbus status word when the fieldbus adapter is set to a transparent communication profile.	*Not selected*
	Not selected	No source selected.	-
	Other	The value is taken from another parameter.	-
150.40	*FBA B act1 transparent source*	Selects the type of actual value 1 transmitted to the fieldbus network through fieldbus adapter B.	*Not selected*
	Not selected	No source selected.	-
	Other	The value is taken from another parameter.	-
150.41	*FBA B act2 transparent source*	Selects the type of actual value 2 transmitted to the fieldbus network through fieldbus adapter B.	*Not selected*
	Not selected	No source selected.	-
	Other	The value is taken from another parameter.	-
150.42	*FBA B debug mode*	Enables the display of raw (unmodified) data received from and sent to fieldbus adapter B in parameters *150.43*…*150.48*. Note that the changes made take effect only after reboot or setting the parameter *154.27 FBA B par refresh* to *Configure*. This functionality should only be used for debugging.	*Disable*
	Disable	Display of raw data from fieldbus adapter B disabled.	0
	Fast	Debug mode is enabled. Cyclical data update is as fast as possible which increases the CPU load on the regenerative rectifier.	1

No.	Name/Value	Description	Def/FbEq16
150.43	*FBA B control word*	Displays the control word received from fieldbus adapter B. For the commands assigned to each bit, see chapter *Fieldbus control through a fieldbus adapter*.	-
	00000000h … FFFFFFFFh	Control word received from fieldbus adapter B.	1 = 1
150.46	*FBA B status word*	Displays the status word sent to fieldbus adapter B. For the commands assigned to each bit, see chapter *Fieldbus control through a fieldbus adapter*.	-
	00000000h … FFFFFFFFh	Status word sent to fieldbus adapter B.	1 = 1
150.47	*FBA B actual value 1*	Displays raw actual value ACT1 sent to fieldbus adapter B.	-
	-2147483648 … 2147483647	Raw ACT1 sent to fieldbus adapter B.	1 = 1
150.48	*FBA B actual value 2*	Displays raw actual value ACT2 sent to fieldbus adapter B.	-
	-2147483648 … 2147483647	Raw ACT2 sent to fieldbus adapter B.	1 = 1
150.51	*FBA B timelevel sel*	Selects the communication speed for the fieldbus adapter B. In general, lower speeds reduce CPU load. The table below shows the read/write intervals for cyclic and acyclic data with each parameter setting. **Selection** / **Cyclic*** / **Acyclic**** *Monitoring* / 10 ms / 10 ms *Normal* / 2 ms / 10 ms *Fast* / 500 µs / 2 ms *Very fast* / 250 µs / 500 µs *Cyclic data consists of fieldbus Control and Status words, Act1 and Act2. **Acyclic data consists of the parameter data mapped to parameter groups *155 FBA B data in* and *156 FBA B data out*.	*Normal*
	Normal	Normal speed.	0
	Fast	Fast speed.	1
	Very fast	Very fast speed.	2
	Monitoring	Slow speed. Optimized for PC tool communication and monitoring usage.	3

151 FBA A settings		Fieldbus adapter A configuration.	
151.01	*FBA A type*	Displays the type of the connected fieldbus adapter module. **0** = Module is not found or is not properly connected, or is disabled by parameter *150.01 FBA A enable*; **1** = FPBA; **32** = FCAN; **37** = FDNA; **101** = FCNA; **128** = FENA-11/21; **132** = FPNO; **135** = FECA; **136** = FEPL; **485** = FSCA; **502** = FMBT; **2222** = FEIP; **62944** = FSEA. **Note:** All types of the fieldbus adapter modules are not necessarily supported yet. This parameter is read-only.	-
151.02	*FBA A Par2*	Parameters *151.02*…*151.26* are adapter module-specific. For more information, see the documentation of the fieldbus adapter module. Note that not all of these parameters are necessarily used. **Note:** In supply units only *Trans16* profile is in use.	-
	0…65535	Fieldbus adapter configuration parameter.	1 = 1
…	…	…	…

No.	Name/Value	Description	Def/FbEq16
151.26	*FBA A Par26*	See parameter *151.02 FBA A Par2*.	-
	0…65535	Fieldbus adapter configuration parameter.	1 = 1
151.27	*FBA A par refresh*	Validates any changed fieldbus adapter module configuration settings. After refreshing, the value reverts automatically to *Done*. **Note:** This parameter cannot be changed while the regenerative rectifier unit is running.	*Done*
	Done	Refreshing done.	0
	Configure	Refreshing.	1
151.28	*FBA A par table ver*	Displays the parameter table revision of the fieldbus adapter module mapping file stored in the memory. In format axyz, where a = major revision number; xy = minor revision number; z = correction number.	-
	0000h…FFFFh	Parameter table revision of adapter module.	1 = 1
151.29	*FBA A drive type code*	Displays the type code of the fieldbus adapter module mapping file stored in the memory.	-
	0…65535	Type code of fieldbus adapter module mapping file.	1 = 1
151.30	*FBA A mapping file ver*	Displays the fieldbus adapter module mapping file revision stored in the memory of the regenerative rectifier in decimal format. **Example:** 0x107 = revision 1.07.	-
	0…65535	Mapping file revision.	1 = 1
151.31	*D2FBA A comm status*	Displays the status of the fieldbus adapter module communication.	*Idle*
	Idle	Adapter is not configured.	0
	Exec.init	Adapter is initializing.	1
	Time out	A time-out has occurred in the communication between the adapter and the regenerative rectifier.	2
	Conf.err	Adapter configuration error: the major or minor revision code of the common program revision in the fieldbus adapter module is not the revision required by the module (see parameter *151.32 FBA A comm SW ver*), or mapping file upload has failed more than three times.	3
	Off-line	Adapter is off-line.	4
	On-line	Adapter is on-line.	5
	Reset	Adapter is performing a hardware reset.	6
151.32	*FBA A comm SW ver*	Displays the common program revision of the adapter module in format axyz, where a = major revision number, xy = minor revision number, z = correction number. **Example:** 190A = revision 1.90A.	-
		Common program revision of adapter module.	1 = 1
151.33	*FBA A appl SW ver*	Displays the application program revision of the adapter module in format axyz, where a = major revision number, xy = minor revision number, z = correction number. **Example:** 190A = revision 1.90A.	-
		Application program version of adapter module.	1 = 1

No.	Name/Value	Description	Def/FbEq16
152 FBA A data in		Selection of data to be transferred from regenerative rectifier to fieldbus controller through fieldbus adapter A. **Note:** 32-bit values require two consecutive parameters. Whenever a 32-bit value is selected in a data parameter, the next parameter is automatically reserved.	
152.01	*FBA A data in1*	Parameters *152.01*…*152.12* select data to be transferred from the regenerative rectifier to the fieldbus controller through fieldbus adapter A.	*None*
	None	None.	0
	CW 16bit	Control word (16 bits)	1
	SW 16bit	Status word (16 bits)	4
	Act1 16bit	Actual value ACT1 (16 bits)	5
	Act2 16bit	Actual value ACT2 (16 bits)	6
	CW 32bit	Control word (32 bits)	11
	SW 32bit	Status word (32 bits)	14
	Act1 32bit	Actual value ACT1 (32 bits)	15
	Act2 32bit	Actual value ACT2 (32 bits)	16
	Other	The value is taken from another parameter.	-
…	…	…	…
152.12	*FBA A data in12*	See parameter *152.01 FBA A data in1*.	*None*

153 FBA A data out		Selection of data to be transferred from fieldbus controller to the regenerative rectifier unit through fieldbus adapter A. **Note:** 32-bit values require two consecutive parameters. Whenever a 32-bit value is selected in a data parameter, the next parameter is automatically reserved.	
153.01	*FBA data out1*	Parameters *153.01*…*153.12* select data to be transferred from the fieldbus controller to the regenerative rectifier through fieldbus adapter A.	*None*
	None	None.	0
	CW 16bit	Control word (16 bits)	1
	CW 32bit	Control word (32 bits)	11
	Other	The value is taken from another parameter.	-
…	…	…	…
153.12	*FBA data out12*	See parameter *153.01 FBA data out1*.	*None*

154 FBA B settings		Fieldbus adapter B configuration.	
154.01	*FBA B type*	Displays the type of the connected fieldbus adapter module. **0** = Module is not found or is not properly connected, or is disabled by parameter *150.31 FBA B enable*; **1** = FPBA; **32** = FCAN; **37** = FDNA; **101** = FCNA; **128** = FENA-11/21; **132** = FPNO; **135** = FECA; **136** = FEPL; **485** = FSCA; **502** = FMBT; **2222** = FEIP; **62944** = FSEA. **Note:** All types of the fieldbus adapter modules are not necessarily supported yet. This parameter is read-only.	-
154.02	*FBA B Par2*	Parameters *154.02*…*154.26* are adapter module-specific. For more information, see the documentation of the fieldbus adapter module. Note that not all of these parameters are necessarily used.	-
	0…65535	Fieldbus adapter configuration parameter.	1 = 1
…	…	…	…
154.26	*FBA B Par26*	See parameter *154.26 FBA B Par2*.	-

No.	Name/Value	Description	Def/FbEq16
	0…65535	Fieldbus adapter configuration parameter.	1 = 1
154.27	*FBA B par refresh*	Validates any changed fieldbus adapter module configuration settings. After refreshing, the value reverts automatically to *Done*. **Note:** This parameter cannot be changed while the regenerative rectifier unit is running.	*Done*
	Done	Refreshing done.	0
	Configure	Refreshing.	1
154.28	*FBA B par table ver*	Displays the parameter table revision of the fieldbus adapter module mapping file stored in the memory. In format axyz, where a = major revision number; xy = minor revision number; z = correction number.	-
		Parameter table revision of adapter module.	1 = 1
154.29	*FBA B drive type code*	Displays the type code of the fieldbus adapter module mapping file stored in the memory.	-
	0…65535	Type code of fieldbus adapter module mapping file.	1 = 1
154.30	*FBA B mapping file ver*	Displays the fieldbus adapter module mapping file revision stored in the memory of the regenerative rectifier in decimal format. **Example:** Integer 263 -> 0x107 = revision 1.07	-
	0…65535	Mapping file revision.	1 = 1
154.31	*D2FBA B comm status*	Displays the status of the fieldbus adapter module communication.	*Idle*
	Idle	Adapter is not configured.	0
	Exec.init	Adapter is initializing.	1
	Time out	A time-out has occurred in the communication between the adapter and the regenerative rectifier.	2
	Conf.err	Adapter configuration error: the major or minor revision code of the common program revision in the fieldbus adapter module is not the revision required by the module (see parameter *154.32 FBA B comm SW ver*), or mapping file upload has failed more than three times.	3
	Off-line	Adapter is off-line.	4
	On-line	Adapter is on-line.	5
	Reset	Adapter is performing a hardware reset.	6
154.32	*FBA B comm SW ver*	Displays the common program revision of the adapter module in format axyz, where a = major revision number, xy = minor revision number, z = correction number. **Example:** 190A = revision 1.90A.	-
		Common program revision of adapter module.	1 = 1
154.33	*FBA B appl SW ver*	Displays the application program revision of the adapter module in format axyz, where a = major revision number, xy = minor revision number, z = correction number or letter. **Example:** 190A = revision 1.90A.	-
		Application program version of adapter module.	1 = 1

No.	Name/Value	Description	Def/FbEq16
155 FBA B data in		Selection of data to be transferred from the regenerative rectifier unit to fieldbus controller through fieldbus adapter B. **Note:** 32-bit values require two consecutive parameters. Whenever a 32-bit value is selected in a data parameter, the next parameter is automatically reserved.	
155.01	*FBA B data in1*	Parameters *155.01*…*155.12* select data to be transferred from the regenerative rectifier to the fieldbus controller through fieldbus adapter B.	*None*
	None	None.	0
	CW 16bit	Control word (16 bits)	1
	SW 16bit	Status word (16 bits)	4
	Act1 16bit	Actual value ACT1 (16 bits)	5
	Act2 16bit	Actual value ACT2 (16 bits)	6
	CW 32bit	Control word (32 bits)	11
	SW 32bit	Status word (32 bits)	14
	Act1 32bit	Actual value ACT1 (32 bits)	15
	Act2 32bit	Actual value ACT2 (32 bits)	16
	Other	The value is taken from another parameter.	-
…	…	…	
155.12	*FBA B data in12*	See parameter *155.01 FBA B data in1*.	*None*
156 FBA B data out		Selection of data to be transferred from fieldbus controller to the regenerative rectifier unit through fieldbus adapter B. **Note:** 32-bit values require two consecutive parameters. Whenever a 32-bit value is selected in a data parameter, the next parameter is automatically reserved.	
156.01	*FBA B data out1*	Parameters *156.01*…*156.12* select data to be transferred from the fieldbus controller to the regenerative rectifier through fieldbus adapter B.	*None*
	None	None.	0
	CW 16bit	Control word (16 bits)	1
	CW 32bit	Control word (32 bits)	11
	Other	The value is taken from another parameter.	-
…	…	…	…
156.12	*FBA B data out12*	See parameter *156.01 FBA B data out1*.	*None*
160 DDCS communication		DDCS communication settings.	
160.41	*Extension adapter com port*	Selects the channel used for connecting an optional FEA-xx extension adapter.	*Not in use*
	Not in use	None (communication disabled).	0
	Slot 1A	Channel A on FDCO module in slot 1 (with ZCU control unit only).	1
	Slot 2A	Channel A on FDCO module in slot 2 (with ZCU control unit only).	2
	Slot 3A	Channel A on FDCO module in slot 3 (with ZCU control unit only).	3
	Slot 1B	Channel B on FDCO module in slot 1 (with ZCU control unit only).	4
	Slot 2B	Channel B on FDCO module in slot 2 (with ZCU control unit only).	5
	Slot 3B	Channel B on FDCO module in slot 3 (with ZCU control unit only).	6
	RDCO CH 3	Channel 3 on RDCO module (with BCU control unit only).	13

No.	Name/Value	Description	Def/FbEq16
160.51	*DDCS controller comm port*	Selects the DDCS channel used for connecting an external controller (such as an AC 800M or ACS880 inverter).	*No connect*
	No connect	None (communication disabled).	0
	Slot 1A	Channel A on FDCO module in slot 1 (with ZCU control unit only).	1
	Slot 2A	Channel A on FDCO module in slot 2 (with ZCU control unit only).	2
	Slot 3A	Channel A on FDCO module in slot 3 (with ZCU control unit only).	3
	Slot 1B	Channel B on FDCO module in slot 1 (with ZCU control unit only).	4
	Slot 2B	Channel B on FDCO module in slot 2 (with ZCU control unit only).	5
	Slot 3B	Channel B on FDCO module in slot 3 (with ZCU control unit only).	6
	RDCO CH 0	Channel 0 on RDCO module (with BCU control unit only).	10
160.52	*DDCS controller node address*	Selects the node address for communication with the external controller. No two nodes on-line may have the same address.	1
	1…254	Node address.	1 = 1
160.55	*DDCS controller HW connection*	Selects the topology of the fiber optic link.	*Star*
	Ring	The devices are connected in a ring topology. Forwarding of messages is enabled.	0
	Star	The devices are connected in a star topology (for example, through a branching unit). Forwarding of messages is disabled.	1
160.56	*DDCS controller baud rate*	Defines the communication speed on the fiber optic link. This should be set to the same value on all devices on the link.	*4 Mbps*
	1 Mbps	1 megabit/second.	1
	2 Mbps	2 megabit/second.	2
	4 Mbps	4 megabit/second.	4
	8 Mbps	8 megabit/second.	8
160.57	*DDCS controller link control*	Defines the light intensity of the transmission LED of RDCO module channel CH0. (This parameter is effective only when parameter *161.101 DDCS controller comm port* is set to *RDCO CH 0*. FDCO modules have a hardware transmitter current selector.) In general, use higher values with longer fiber optic cables. The maximum setting is applicable to the maximum length of the fiber optic link.	10
	1…15	Light intensity.	1 = 1
160.58	*DDCS controller comm loss time*	Sets a time-out for communication with the external controller. If a communication break lasts longer than the time-out, the action specified by parameter *160.59 DDCS controller comm loss function* is taken.	100 ms
	0 … 60000 ms	Time-out for communication with external controller.	1 = 1
160.59	*DDCS controller comm loss function*	Selects how the regenerative rectifier reacts to a communication break between it and the external controller.	*Fault*
	No action	No action taken.	0
	Fault	A fault is generated.	1
	Warning	A warning is generated.	2

No.	Name/Value	Description	Def/FbEq16
160.64	Mailbox dataset selection	Selects dataset pair to be used in mailbox communication.	Dataset 32/33
	Dataset 32/33	Dataset 32 is used for query and dataset 33 for response.	0
	Dataset 24/25	Dataset 24 is used for query and dataset 25 for response.	1

161 DDCS transmit		Defines the data sent to the DDCS link.	
161.51	Data set 11 data 1 selection	Selects the location where the value of data set 11 data word 1 is read from.	None
	None	None.	0
	CW 16bit	Virtual address for 16-bit control word.	1
	SW 16bit	Virtual address for 16-bit status word.	4
	Other	The value is taken from another source.	-
161.52	Data set 11 data 2 selection	Selects the location where the value of data set 11 data word 2 is read from. For the selections, see parameter 161.51 Data set 11 data 1 selection.	None
161.53	Data set 11 data 3 selection	Selects the location where the value of data set 11 data word 3 is read from. For the selections, see parameter 161.51 Data set 11 data 1 selection.	None
161.54	Data set 13 data 1 selection	Selects the location where the value of data set 13 data word 1 is read from. For the selections, see parameter 161.51 Data set 11 data 1 selection.	None
161.55	Data set 13 data 2 selection	Selects the location where the value of data set 13 data word 2 is read from. For the selections, see parameter 161.51 Data set 11 data 1 selection.	None
161.56	Data set 13 data 3 selection	Selects the location where the value of data set 13 data word 3 is read from. For the selections, see parameter 161.51 Data set 11 data 1 selection.	None
161.57	Data set 15 data 1 selection	Selects the location where the value of data set 15 data word 1 is read from. For the selections, see parameter 161.51 Data set 11 data 1 selection.	None
161.58	Data set 15 data 2 selection	Selects the location where the value of data set 15 data word 2 is read from. For the selections, see parameter 161.51 Data set 11 data 1 selection.	None
161.59	Data set 15 data 3 selection	Selects the location where the value of data set 15 data word 3 is read from. For the selections, see parameter 161.51 Data set 11 data 1 selection.	None
161.60	Data set 17 data 1 selection	Selects the location where the value of data set 17 data word 1 is read from. For the selections, see parameter 161.51 Data set 11 data 1 selection.	None
161.61	Data set 17 data 2 selection	Selects the location where the value of data set 17 data word 2 is read from. For the selections, see parameter 161.51 Data set 11 data 1 selection.	None

No.	Name/Value	Description	Def/FbEq16
161.62	*Data set 17 data 3 selection*	Selects the location where the value of data set 17 data word 3 is read from. For the selections, see parameter *161.51 Data set 11 data 1 selection*.	*None*
161.63	*Data set 19 data 1 selection*	Selects the location where the value of data set 19 data word 1 is read from. For the selections, see parameter *161.51 Data set 11 data 1 selection*.	*None*
161.64	*Data set 19 data 2 selection*	Selects the location where the value of data set 19 data word 2 is read from. For the selections, see parameter *161.51 Data set 11 data 1 selection*.	*None*
161.65	*Data set 19 data 3 selection*	Selects the location where the value of data set 19 data word 3 is read from. For the selections, see parameter *161.51 Data set 11 data 1 selection*.	*None*
161.66	*Data set 21 data 1 selection*	Selects the location where the value of data set 21 data word 1 is read from. For the selections, see parameter *161.51 Data set 11 data 1 selection*.	*None*
161.67	*Data set 21 data 2 selection*	Selects the location where the value of data set 21 data word 2 is read from. For the selections, see parameter *161.51 Data set 11 data 1 selection*.	*None*
161.68	*Data set 21 data 3 selection*	Selects the location where the value of data set 21 data word 3 is read from. For the selections, see parameter *161.51 Data set 11 data 1 selection*.	*None*
161.69	*Data set 23 data 1 selection*	Selects the location where the value of data set 23 data word 1 is read from. For the selections, see parameter *161.51 Data set 11 data 1 selection*.	*None*
161.70	*Data set 23 data 2 selection*	Selects the location where the value of data set 23 data word 2 is read from. For the selections, see parameter *161.51 Data set 11 data 1 selection*.	*None*
161.71	*Data set 23 data 3 selection*	Selects the location where the value of data set 23 data word 3 is read from. For the selections, see parameter *161.51 Data set 11 data 1 selection*.	*None*
161.72	*Data set 25 data 1 selection*	Selects the location where the value of data set 25 data word 1 is read from. For the selections, see parameter *161.51 Data set 11 data 1 selection*.	*None*
161.73	*Data set 25 data 2 selection*	Selects the location where the value of data set 25 data word 2 is read from. For the selections, see parameter *161.51 Data set 11 data 1 selection*.	*None*
161.74	*Data set 25 data 3 selection*	Selects the location where the value of data set 25 data word 3 is read from. For the selections, see parameter *161.51 Data set 11 data 1 selection*.	*None*

No.	Name/Value	Description	Def/FbEq16
161.101	Data set 11 data 1 value	Defines the raw data to be transmitted in data set 11 data word 1.	0
	0…65535	Raw data to be transmitted in data set 11 data word 1.	1 = 1
161.102	Data set 11 data 2 value	Defines the raw data to be transmitted in data set 11 data word 2.	0
	0…65535	Raw data to be transmitted in data set 11 data word 2.	1 = 1
161.103	Data set 11 data 3 value	Defines the raw data to be transmitted in data set 11 data word 3.	0
	0…65535	Raw data to be transmitted in data set 11 data word 3.	1 = 1
161.104	Data set 13 data 1 value	Defines the raw data to be transmitted in data set 13 data word 1.	0
	0…65535	Raw data to be transmitted in data set 13 data word 1.	1 = 1
161.105	Data set 13 data 2 value	Defines the raw data to be transmitted in data set 13 data word 2.	0
	0…65535	Raw data to be transmitted in data set 13 data word 2.	1 = 1
161.106	Data set 13 data 3 value	Defines the raw data to be transmitted in data set 13 data word 3.	0
	0…65535	Raw data to be transmitted in data set 13 data word 3.	1 = 1
161.107	Data set 15 data 1 value	Defines the raw data to be transmitted in data set 15 data word 1.	0
	0…65535	Raw data to be transmitted in data set 15 data word 1.	1 = 1
161.108	Data set 15 data 2 value	Defines the raw data to be transmitted in data set 15 data word 2.	0
	0…65535	Raw data to be transmitted in data set 15 data word 2.	1 = 1
161.109	Data set 15 data 3 value	Defines the raw data to be transmitted in data set 15 data word 3.	0
	0…65535	Raw data to be transmitted in data set 15 data word 3.	1 = 1
161.110	Data set 17 data 1 value	Defines the raw data to be transmitted in data set 17 data word 1.	0
	0…65535	Raw data to be transmitted in data set 17 data word 1.	1 = 1
161.111	Data set 17 data 2 value	Defines the raw data to be transmitted in data set 17 data word 2.	0
	0…65535	Raw data to be transmitted in data set 17 data word 2.	1 = 1
161.112	Data set 17 data 3 value	Defines the raw data to be transmitted in data set 17 data word 3.	0
	0…65535	Raw data to be transmitted in data set 17 data word 3.	1 = 1
161.113	Data set 19 data 1 value	Defines the raw data to be transmitted in data set 19 data word 1.	0
	0…65535	Raw data to be transmitted in data set 19 data word 1.	1 = 1
161.114	Data set 19 data 2 value	Defines the raw data to be transmitted in data set 19 data word 2.	0
	0…65535	Raw data to be transmitted in data set 19 data word 2.	1 = 1
161.115	Data set 19 data 3 value	Defines the raw data to be transmitted in data set 19 data word 3.	0
	0…65535	Raw data to be transmitted in data set 19 data word 3.	1 = 1
161.116	Data set 21 data 1 value	Defines the raw data to be transmitted in data set 21 data word 1.	0
	0…65535	Raw data to be transmitted in data set 21 data word 1.	1 = 1
161.117	Data set 21 data 2 value	Defines the raw data to be transmitted in data set 21 data word 2.	0
	0…65535	Raw data to be transmitted in data set 21 data word 2.	1 = 1
161.118	Data set 21 data 3 value	Defines the raw data to be transmitted in data set 21 data word 3.	0

No.	Name/Value	Description	Def/FbEq16
	0…65535	Raw data to be transmitted in data set 21 data word 3.	1 = 1
161.119	*Data set 23 data 1 value*	Defines the raw data to be transmitted in data set 23 data word 1.	0
	0…65535	Raw data to be transmitted in data set 23 data word 1.	1 = 1
161.120	*Data set 23 data 2 value*	Defines the raw data to be transmitted in data set 23 data word 2.	0
	0…65535	Raw data to be transmitted in data set 23 data word 2.	1 = 1
161.121	*Data set 23 data 3 value*	Defines the raw data to be transmitted in data set 23 data word 3.	0
	0…65535	Raw data to be transmitted in data set 23 data word 3.	1 = 1
161.122	*Data set 25 data 1 value*	Defines the raw data to be transmitted in data set 25 data word 1.	0
	0…65535	Raw data to be transmitted in data set 25 data word 1.	1 = 1
161.123	*Data set 25 data 2 value*	Defines the raw data to be transmitted in data set 25 data word 2.	0
	0…65535	Raw data to be transmitted in data set 25 data word 2.	1 = 1
161.124	*Data set 25 data 3 value*	Defines the raw data to be transmitted in data set 25 data word 3.	0
	0…65535	Raw data to be transmitted in data set 25 data word 3.	1 = 1

162 DDCS receive		Mapping of data received through the DDCS link.	
162.51	*Data set 10 data 1 selection*	Selects the location into which the value of data set 10 data word 1 is written.	*None*
	None	None.	0
	CW 16bit	Virtual address for 16-bit control word.	1
	Other	The value is taken from another source.	-
162.52	*Data set 10 data 2 selection*	Selects the location into which the value of data set 10 data word 2 is written. For the selections, see parameter *162.51 Data set 10 data 1 selection*.	*None*
162.53	*Data set 10 data 3 selection*	Selects the location into which the value of data set 10 data word 3 is written. For the selections, see parameter *162.51 Data set 10 data 1 selection*.	*None*
162.54	*Data set 12 data 1 selection*	Selects the location into which the value of data set 12 data word 1 is written. For the selections, see parameter *162.51 Data set 10 data 1 selection*.	*None*
162.55	*Data set 12 data 2 selection*	Selects the location into which the value of data set 12 data word 2 is written. For the selections, see parameter *162.51 Data set 10 data 1 selection*.	*None*
162.56	*Data set 12 data 3 selection*	Selects the location into which the value of data set 12 data word 3 is written. For the selections, see parameter *162.51 Data set 10 data 1 selection*.	*None*
162.57	*Data set 14 data 1 selection*	Selects the location into which the value of data set 14 data word 1 is written. For the selections, see parameter *162.51 Data set 10 data 1 selection*.	*None*
162.58	*Data set 14 data 2 selection*	Selects the location into which the value of data set 14 data word 2 is written. For the selections, see parameter *162.51 Data set 10 data 1 selection*.	*None*

No.	Name/Value	Description	Def/FbEq16
162.59	Data set 14 data 3 selection	Selects the location into which the value of data set 14 data word 3 is written. For the selections, see parameter 162.51 Data set 10 data 1 selection.	None
162.60	Data set 16 data 1 selection	Selects the location into which the value of data set 16 data word 1 is written. For the selections, see parameter 162.51 Data set 10 data 1 selection.	None
162.61	Data set 16 data 2 selection	Selects the location into which the value of data set 16 data word 2 is written. For the selections, see parameter 162.51 Data set 10 data 1 selection.	None
162.62	Data set 16 data 3 selection	Selects the location into which the value of data set 16 data word 3 is written. For the selections, see parameter 162.51 Data set 10 data 1 selection.	None
162.63	Data set 18 data 1 selection	Selects the location into which the value of data set 18 data word 1 is written. For the selections, see parameter 162.51 Data set 10 data 1 selection.	None
162.64	Data set 18 data 2 selection	Selects the location into which the value of data set 18 data word 2 is written. For the selections, see parameter 162.51 Data set 10 data 1 selection.	None
162.65	Data set 18 data 3 selection	Selects the location into which the value of data set 18 data word 3 is written. For the selections, see parameter 162.51 Data set 10 data 1 selection.	None
162.66	Data set 20 data 1 selection	Selects the location into which the value of data set 20 data word 1 is written. For the selections, see parameter 162.51 Data set 10 data 1 selection.	None
162.67	Data set 20 data 2 selection	Selects the location into which the value of data set 20 data word 2 is written. For the selections, see parameter 162.51 Data set 10 data 1 selection.	None
162.68	Data set 20 data 3 selection	Selects the location into which the value of data set 20 data word 3 is written. For the selections, see parameter 162.51 Data set 10 data 1 selection.	None
162.69	Data set 22 data 1 selection	Selects the location into which the value of data set 22 data word 1 is written. For the selections, see parameter 162.51 Data set 10 data 1 selection.	None
162.70	Data set 22 data 2 selection	Selects the location into which the value of data set 22 data word 2 is written. For the selections, see parameter 162.51 Data set 10 data 1 selection.	None
162.71	Data set 22 data 3 selection	Selects the location into which the value of data set 22 data word 3 is written. For the selections, see parameter 162.51 Data set 10 data 1 selection.	None

No.	Name/Value	Description	Def/FbEq16
162.72	*Data set 24 data 1 selection*	Selects the location into which the value of data set 24 data word 1 is written. For the selections, see parameter *162.51 Data set 10 data 1 selection*.	*None*
162.73	*Data set 24 data 2 selection*	Selects the location into which the value of data set 24 data word 2 is written. For the selections, see parameter *162.51 Data set 10 data 1 selection*.	*None*
162.74	*Data set 24 data 3 selection*	Selects the location into which the value of data set 24 data word 3 is written. For the selections, see parameter *162.51 Data set 10 data 1 selection*.	*None*
162.101	*Data set 10 data 1 value*	Defines the raw data to be received in data set 10 data word 1.	0
	0…65535	Raw data to be received in data set 10 data word 1.	1 = 1
162.102	*Data set 10 data 2 value*	Defines the raw data to be received in data set 10 data word 2.	0
	0…65535	Raw data to be received in data set 10 data word 2.	1 = 1
162.103	*Data set 10 data 3 value*	Defines the raw data to be received in data set 10 data word 3.	0
	0…65535	Raw data to be received in data set 10 data word 3.	1 = 1
162.104	*Data set 12 data 1 value*	Defines the raw data to be received in data set 12 data word 1.	0
	0…65535	Raw data to be received in data set 12 data word 1.	1 = 1
162.105	*Data set 12 data 2 value*	Defines the raw data to be received in data set 12 data word 2.	0
	0…65535	Raw data to be received in data set 12 data word 2.	1 = 1
162.106	*Data set 12 data 3 value*	Defines the raw data to be received in data set 12 data word 3.	0
	0…65535	Raw data to be received in data set 12 data word 3.	1 = 1
162.107	*Data set 14 data 1 value*	Defines the raw data to be received in data set 14 data word 1.	0
	0…65535	Raw data to be received in data set 14 data word 1.	1 = 1
162.108	*Data set 14 data 2 value*	Defines the raw data to be received in data set 14 data word 2.	0
	0…65535	Raw data to be received in data set 14 data word 2.	1 = 1
162.109	*Data set 14 data 3 value*	Defines the raw data to be received in data set 14 data word 3.	0
	0…65535	Raw data to be received in data set 14 data word 3.	1 = 1
162.110	*Data set 16 data 1 value*	Defines the raw data to be received in data set 16 data word 1.	0
	0…65535	Raw data to be received in data set 16 data word 1.	1 = 1
162.111	*Data set 16 data 2 value*	Defines the raw data to be received in data set 16 data word 2.	0
	0…65535	Raw data to be received in data set 16 data word 2.	1 = 1
162.112	*Data set 16 data 3 value*	Defines the raw data to be received in data set 16 data word 3.	0
	0…65535	Raw data to be received in data set 16 data word 3.	1 = 1
162.113	*Data set 18 data 1 value*	Defines the raw data to be received in data set 18 data word 1.	0
	0…65535	Raw data to be received in data set 18 data word 1.	1 = 1

No.	Name/Value	Description	Def/FbEq16
162.114	Data set 18 data 2 value	Defines the raw data to be received in data set 18 data word 2.	0
	0…65535	Raw data to be received in data set 18 data word 2.	1 = 1
162.115	Data set 18 data 3 value	Defines the raw data to be received in data set 18 data word 3.	0
	0…65535	Raw data to be received in data set 18 data word 3.	1 = 1
162.116	Data set 20 data 1 value	Defines the raw data to be received in data set 20 data word 1.	0
	0…65535	Raw data to be received in data set 20 data word 1.	1 = 1
162.117	Data set 20 data 2 value	Defines the raw data to be received in data set 20 data word 2.	0
	0…65535	Raw data to be received in data set 20 data word 2.	1 = 1
162.118	Data set 20 data 3 value	Defines the raw data to be received in data set 20 data word 3.	0
	0…65535	Raw data to be received in data set 20 data word 3.	1 = 1
162.119	Data set 22 data 1 value	Defines the raw data to be received in data set 22 data word 1.	0
	0…65535	Raw data to be received in data set 22 data word 1.	1 = 1
162.120	Data set 22 data 2 value	Defines the raw data to be received in data set 22 data word 2.	0
	0…65535	Raw data to be received in data set 22 data word 2.	1 = 1
162.121	Data set 22 data 3 value	Defines the raw data to be received in data set 22 data word 3.	0
	0…65535	Raw data to be received in data set 22 data word 3.	1 = 1
162.122	Data set 24 data 1 value	Defines the raw data to be received in data set 24 data word 1.	0
	0…65535	Raw data to be received in data set 24 data word 1.	1 = 1
162.123	Data set 24 data 2 value	Defines the raw data to be received in data set 24 data word 2.	0
	0…65535	Raw data to be received in data set 24 data word 2.	1 = 1
162.124	Data set 24 data 3 value	Defines the raw data to be received in data set 24 data word 3.	0
	0…65535	Raw data to be received in data set 24 data word 3.	1 = 1

190 Additional actual values		Additional actual values of 6-pulse regenerative rectifier bridge.	
190.06	Main voltage U1-V1	Main voltage U1-V1 [V].	-
	0.00…2000.00 V	Main voltage U1-V1.	1 = 1 V
190.07	Main voltage V1-W1	Main voltage V1-W1 [V].	-
	0.00…2000.00 V	Main voltage V1-W1.	1 = 1 V
190.08	Main voltage W1-U1	Main voltage W1-U1 [V].	-
	0.00…2000.00 V	Main voltage W1-U1.	1 = 1 V
190.40	Phase current U1	Filtered rms value of measured U1 phase current [A].	-
	0.00…30000.00 A	U1 phase current.	1 = 1 A
190.41	Phase current V1	Filtered rms value of measured V1 phase current [A].	-
	0.00…30000.00 A	V1 phase current.	1 = 1 A
190.42	Phase current W1	Filtered rms value of measured W1 phase current [A].	-
	0.00…30000.00 A	W1 phase current.	1 = 1 A
190.70	DC current 1	Filtered value of calculated DC current 1 [A].	-
	-30000.00 … 30000.00 A	Calculated DC current 1.	1 = 1 A

No.	Name/Value	Description	Def/FbEq16
190.71	*DC current 1 peak*	Maximum DC current peak value during a grid cycle.	-
	0.00…30000.00 A	Maximum DC current peak value.	1 = 1 A
190.72	*DC current 1 fast*	Average DC current during 60 degree period (1/6 of grid cycle) [A].	-
	-30000.00 … 30000.00 A	Fast DC current 1.	1 = 1 A
190.73	*DC voltage 1 fast*	Average DC voltage during 60 degree period (1/6 of grid cycle) [V].	-
	0.00…2000.00 V	Fast DC voltage 1.	1 = 1 V
190.74	*Main voltage 1 fast*	Average main voltage during 60 degree period (1/6 of grid cycle) [V].	-
	0.00…2000.00 V	Main grid voltage 1.	1 = 1 V
190.75	*LSU status word 1*	LSU status word 1.	-

Bit	Name	Description
0	Phase voltage ok	0 = None of phases is ok. 1 = At least one phase is ok.
1	Grid voltage above limit	0 = Grid voltage is not ok. 1 = Grid voltage is above undervoltage limit.
2	DC voltage above limit	0 = DC voltage is not ok. 1 = DC voltage is above undervoltage limit.
3	Not in use	
4	Synchronized to grid	0 = Not synchronized to grid. 1 = Synchronized to grid and ready to start.
5	Phase order UVW	0 = Phase order of grid is not U-V-W. 1 = Phase order of grid is U-V-W.
6	Phase order UWV	0 = Phase order of grid is not U-W-V. 1 = Phase order of grid is U-W-V.
7	Not in use	
8	Modulating	0 = LSU is not modulating. 1 = LSU is modulating.
9	Ready for load	0 = Not ready for load. 1= LSU is charged and ready for load.
10	Regenerating	0 = Not regenerating. 1= LSU is regenerating.
11…15	Not in use	

	0000h…FFFFh	LSU status word 1.	1 = 1

No.	Name/Value	Description	Def/FbEq16
190.76	RRU status word 1	Regenerative rectifier status word 1.	-

Bit	Name	Description
0	Diode mode	0 = Diode mode is not active 1 = Diode mode is active. Either there is motoring/zero current or diode mode is taken into use by the user with parameter 120.29 Diode mode.
1	Regulated mode	0 = Regulated mode is not active 1 = Regulated mode is active
2	Regenerative mode	0 = Full regenerative mode is not active 1 = Full regenerative mode is active
3	Soft commutation	0 = Soft commutation in disabled 1 = Soft commutation in enabled
4	Master RRU	0 = Normal operating mode 1 = Second RRU of the parallel-connected 2×RRU line-up is the master.
5…15	Not in use	

	0000h…FFFFh	Regenerative rectifier status word 1.	1 = 1

192 Additional actual values 2		Additional actual values of the second regenerative rectifier unit in the parallel-connected 2×RRU line-up.	
192.06	Main voltage U2-V2	Main voltage U2-V2 [V].	-
	0.00…2000.00 V	Main voltage U2-V2.	1 = 1 V
192.07	Main voltage V2-W2	Main voltage V2-W2 [V].	-
	0.00…2000.00 V	Main voltage V2-W2.	1 = 1 V
192.08	Main voltage W2-U2	Main voltage W2-U2 [V].	-
	0.00…2000.00 V	Main voltage W2-U2.	1 = 1 V
192.40	Phase current U2	Filtered rms value of measured U2 phase current [A].	-
	0.00…30000.00 A	U2 phase current.	1 = 1 A
192.41	Phase current V2	Filtered rms value of measured V2 phase current [A].	-
	0.00…30000.00 A	V2 phase current.	1 = 1 A
192.42	Phase current W2	Filtered rms value of measured W2 phase current [A].	-
	0.00…30000.00 A	W2 phase current.	1 = 1 A
192.70	DC current 2	Filtered value of calculated DC current 2 [A].	-
	-30000.00 … 30000.00 A	Calculated DC current 2.	1 = 1 A
192.71	DC current 2 peak	Maximum DC current peak value during a grid cycle.	-
	0.00…30000.00 A	Maximum DC current peak value.	1 = 1 A
192.72	DC current 2 fast	Average DC current during 60 degree period (1/6 of grid cycle) [A].	-
	-30000.00 … 30000.00 A	Fast DC current 2.	1 = 1 A
192.73	DC voltage 2 fast	Average DC voltage during 60 degree period (1/6 of grid cycle) [V].	-
	0.00…2000.00 V	Fast DC voltage 2.	1 = 1 V
192.74	Main voltage 2 fast	Average main voltage during 60 degree period (1/6 of grid cycle) [V].	-
	0.00…2000.00 V	Main grid voltage 2.	1 = 1 V

No.	Name/Value	Description	Def/FbEq16
192.75	*LSU status word 2*	LSU status word 2.	-

Bit	Name	Description
0	Phase voltage ok	0 = None of phases is ok. 1 = At least one phase is ok.
1	Grid voltage above limit	0 = Grid voltage is not ok. 1 = Grid voltage is above undervoltage limit.
2	DC voltage above limit	0 = DC voltage is not ok. 1 = DC voltage is above undervoltage limit.
3	Not in use	
4	Synchronized to grid	0 = Not synchronized to grid. 1 = Synchronized to grid and ready to start.
5	Phase order UVW	0 = Phase order of grid is not U-V-W. 1 = Phase order of grid is U-V-W.
6	Phase order UWV	0 = Phase order of grid is not U-W-V. 1 = Phase order of grid is U-W-V.
7	Not in use	
8	Modulating	0 = LSU is not modulating. 1 = LSU is modulating.
9	Ready for load	0 = Not ready for load. 1= LSU is charged and ready for load.
10	Regenerating	0 = Not regenerating. 1= LSU is regenerating.
11…15	Not in use	

	0000h…FFFFh	LSU status word 2.	1 = 1

195 HW configuration		Various hardware-related settings.	
195.01	*Supply voltage*	Selects the supply voltage range. This parameter is used by the ACS880 to determine the nominal voltage of the supply network.	*Not given*
	Not given	No voltage defined. The regenerative rectifier will not start before another value is selected. The regenerative rectifier displays warning *AE24 Voltage category unselected* until you have defined the value.	0
	208 … 240 V	208 … 240 V.	1
	380 … 415 V	380 … 415 V.	2
	440 … 480 V	440 … 480 V.	3
	500 V	500 V.	4
	525 … 600 V	525 … 600 V.	5
	660 … 690 V	660 … 690 V.	6
195.04	*Control board supply*	Specifies how the control unit of the regenerative rectifier unit is powered.	*External 24V*
	Internal 24V	The control unit is powered from the power unit it is connected to.	0
	External 24V	The control unit is powered from an external power supply.	1
	Redundant external 24V	Redundant supervision of 24 V signal. A warning (*AE5C External power signal missing*) is generated if the power supply is missing.	2

No.	Name/Value	Description	Def/FbEq16
195.13	*Reduced run mode*	Specifies the number of rectifier modules available. This parameter must be set if reduced run is required. A value other than 0 activates the reduced run function. If the control program cannot detect the number of modules specified by this parameter, a fault (*5E0E Reduced run*) is generated. See section *Reduced run function* (page *35*). 0 = Reduced run disabled 1…8 = Number of modules available	0
	0…65535	Number of modules available.	-
195.14	*Connected modules*	Shows which of the parallel-connected converter modules have been detected by the control program.	-

Bit	Name	Description
0	Module 1	1 = Module 1 has been detected.
1	Module 2	1 = Module 2 has been detected.
…	…	…
11	Module 12	1 = Module 12 has been detected.
12…15	Reserved.	

	0000h…FFFFh	Converter modules connected.	1 = 1
195.20	*HW options word 1*	Specifies hardware-related options that require differentiated parameter defaults. Activating a bit in this parameter makes the necessary changes in other parameters.	-

Bit	Name	Information
0	Reserved.	
1	Reserved.	
2	Reserved.	
3	Reserved.	
4	Reserved.	
5	Reserved.	
6	Reserved.	
7	Reserved.	
8	Reserved.	
9	Reserved.	
10	Reserved.	
11	Reserved.	
12	Reserved.	
13	DOL fan	Direct-on-line cooling fan is used instead of speed-controlled cooling fan.
14	Reserved.	
15	Reserved.	

	0000h…FFFFh	Hardware options configuration word.	1 = 1
195.30	*Parallel type list filter*	Filters the list of regenerative rectifier types listed by parameter *195.31 Parallel type configuration*.	*All types*
	All types	All types listed.	0
	-3 (380-415V)	-3 (380…415 V) types listed.	1
	-5 (380-500V)	-5 (380…500 V) types listed.	2
	-7 (525-690V)	-7 (525…690 V) types listed.	3

No.	Name/Value	Description	Def/FbEq16
195.31	*Parallel type configuration*	Defines the regenerative rectifier type if it consists of parallel-connected modules. If the regenerative rectifier consists of a single module, leave the value at *Not selected*.	*Not selected*
	Not selected	The regenerative rectifier does not consist of parallel-connected modules, or type not selected.	0
	[Regenerative rectifier type]	The regenerative rectifier type consisting of parallel-connected modules.	-
195.38	*DOL fan start delay*	Defines the start delay for a direct-on-line fan.	7 s
	0…60 s	Start delay for a direct-on-line fan.	1 = 1

196 System		Language selection; pass code; parameter save and restore; control unit reboot; user lock.	
196.01	*Language*	Selects the language of the parameter interface and other displayed information when viewed on the control panel. **Note:** This parameter does not affect the languages visible in the Drive composer PC tool. (Those are specified under View – Settings.)	*Not selected*
	Not selected	None.	0
	English	English.	1033
196.02	*Pass code*	Pass codes can be entered into this parameter to activate further access levels (see parameter *196.03 Access levels active*) or to configure the user lock. Entering “358” toggles the parameter lock, which prevents the changing of all other parameters through the control panel or the Drive composer PC tool. Entering the user pass code (by default, “10000000”) enables parameters *196.100…196.102*, which can be used to define a new user pass code and to select the actions that are to be prevented. Entering an invalid pass code will close the user lock if open, ie. hide parameters *196.100…196.102*. After entering the code, check that the parameters are in fact hidden. If they are not, enter another (random) pass code. Entering several invalid pass codes introduces a delay before a new attempt can be made. Entering further invalid codes will progressively lengthen the delay. **Note:** You must change the default user pass code to maintain a high level of cybersecurity. Store the code in a safe place – the protection cannot be disabled even by ABB if the code is lost. See also section *User lock* (page *37*).	0
	0…99999999	Pass code.	1 = 1

No.	Name/Value	Description	Def/FbEq16
196.03	*Access levels active*	Shows which access levels have been activated by pass codes entered into parameter *196.02 Pass code*. **Bit** / **Name** 0 End user 1 Service 2 Advanced programmer 3…10 Reserved. 11 OEM access level 1 12 OEM access level 2 13 OEM access level 3 14 Parameter lock 15 Reserved.	0001h
	0000h…FFFFh	Active access levels.	-
196.06	*Parameter restore*	Restores the original settings of the control program, ie. parameter default values. **Note:** This parameter cannot be changed while the regenerative rectifier is running.	*Done*
	Done	Restoring is completed.	0
	Restore defs	All parameter values are restored to default values, except fieldbus adapter and drive-to-drive link data.	8
	Clear all	All parameter values are restored to default values, including fieldbus adapter configuration data. PC tool communication is interrupted during the restoring. The regenerative rectifier CPU is re-booted after the restoring is completed.	62
196.07	*Parameter save manually*	Saves the valid parameter values to permanent memory. **Note:** A new parameter value is saved automatically when changed from the PC tool or panel but not when altered through a fieldbus adapter connection.	*Done*
	Done	Save completed.	0
	Save	Save in progress.	1
196.08	*Control board boot*	Changing the value of this parameter to 1 reboots the control unit. The value reverts to 0 automatically.	0
	0…1	1 = Reboot control unit.	1 = 1
196.20	*Time sync primary source*	Defines the 1st priority external source for synchronization of the unit's time and date.	*DDCS Controller*
	Internal	No external source selected.	0
	DDCS Controller	External controller.	1
	Fieldbus A or B	Fieldbus interface A or B.	2
	Fieldbus A	Fieldbus interface A.	3
	Fieldbus B	Fieldbus interface B.	4
	Panel link	Control panel, or Drive composer PC tool connected to the control panel.	8
	Ethernet tool link	Drive composer PC tool through an FENA module.	9
196.24	*Full days since 1st Jan 1980*	Number of full days passed since beginning of the year 1980. This parameter, together with *196.25 Time in minutes within 24 h* and *196.26 Time in ms within one minute* makes it possible to set the date and time in the drive via the parameter interface from a fieldbus or application program. This may be necessary if the fieldbus protocol does not support time synchronization.	-
	1…59999	Days since beginning of 1980.	1 = 1

No.	Name/Value	Description	Def/FbEq16
196.25	*Time in minutes within 24 h*	Number of full minutes passed since midnight. For example, the value 860 corresponds to 2:20 pm. See parameter *196.24 Full days since 1st Jan 1980*.	0 min
	1…1439	Minutes since midnight.	1 = 1
196.26	*Time in ms within one minute*	Number of milliseconds passed since last minute. See parameter *196.24 Full days since 1st Jan 1980*.	0 ms
	0…59999	Number of milliseconds since last minute.	1 = 1
196.29	*Time sync source status*	Time source status word. This parameter is read-only.	-

Bit	Name	Description
0	Time tick received	1 = 1st priority tick received: Tick has been received from 1st priority source.
1	Aux Time tick received	1 = 2nd priority tick received: Tick has been received from 2nd priority source.
2	Tick interval is too long	1 = Yes: Tick interval too long (accuracy compromised).
3	DDCS controller	1 = Tick received: Tick has been received from an external controller.
4	Master/Follower	1 = Tick received: Tick has been received through the master/follower link.
5	Reserved	-
6	D2D	1 = Tick received: Tick has been received through the drive-to-drive link.
7	FbusA	1 = Tick received: Tick has been received through fieldbus interface A.
8	FbusB	1 = Tick received: Tick has been received through fieldbus interface B.
9	EFB	1 = Tick received: Tick has been received through the embedded fieldbus interface.
10	Ethernet	1 = Tick received: Tick has been received through the Ethernet port on type BCU control unit.
11	Panel link	1 = Tick received: Tick has been received from the control panel, or Drive composer PC tool connected to the control panel.
12	Ethernet tool link	1 = Tick received: Tick has been received from Drive composer PC tool through an FENA module.
13	Parameter setting	1 = Tick received: Tick has been set by parameters 96.24…96.26.
14	RTC	1 = RTC time in use: Time and date have been read from the real-time clock.
15	Drive On-Time	1 = Drive on-time in use: Time and date are displaying drive on-time.

	0000h…FFFFh	Time source status word 1.	1 = 1
196.51	*Clear fault and event logger*	Clears the contents of the event logs. See section *Warning/fault history and analysis* on page *162*.	-
	0…65535	00001 = Clear the event logs. (The value will automatically revert to 00000.)	1 = 1

No.	Name/Value	Description	Def/FbEq16
196.61	User data logger status word	Provides status information on the user data logger (see page 163).	0000b

Bit	Name	Description
0	Running	1 = The user data logger is running. The bit is cleared after the post-trigger time has passed.
1	Triggered	1 = The user data logger has been triggered. The bit is cleared when the logger is restarted.
2	Data available	1 = The user data logger contains data that can be read. Note that the bit is not cleared because the data is saved to the memory unit.
3	Configured	1 = The user data logger has been configured. Note that the bit is not cleared because the configuration data is saved to the memory unit.
4…15	Reserved	

	0000b…1111b	User data logger status word.	1 = 1
196.63	User data logger trigger	Triggers, or selects a source that triggers, the user data logger.	Off
	Off	0.	0
	On	1.	1
	Other	Source selection (see Terms and abbreviations on page 39).	-
196.64	User data logger start	Starts, or selects a source that starts, the user data logger.	Off
	Off	0.	0
	On	1.	1
	Other	Source selection (see Terms and abbreviations on page 39).	-
196.65	Factory data logger time level	Selects the sampling interval for the factory data logger (see page 162).	500us
	500us	500 microseconds.	500
	2ms	2 milliseconds.	2000
	10ms	10 milliseconds.	10000
196.70	Disable adaptive program	Enables/disables the adaptive program (if present). See also section Adaptive programming (page 18).	No
	No	Adaptive program enabled.	0
	Yes	Adaptive program disabled.	1
196.100	Change user pass code	*(Visible when user lock is open)* To change the current user pass code, enter a new code into this parameter as well as 196.101 Confirm user pass code. A warning will be active until the new pass code is confirmed. To cancel changing the pass code, close the user lock without confirming. To close the lock, enter an invalid pass code in parameter 196.02 Pass code, activate parameter 196.08 Control board boot, or cycle the power. See also section User lock (page 37).	10000000
	10000000…99999999	New user pass code.	-
196.101	Confirm user pass code	*(Visible when user lock is open)* Confirms the new user pass code entered in 196.100 Change user pass code.	
	10000000…99999999	Confirmation of new user pass code.	-

No.	Name/Value	Description	Def/FbEq16
196.102	*User lock functionality*	(Visible when user lock is open) Selects the actions or functionalities to be prevented by the user lock. Note that the changes made take effect only when the user lock is closed. See parameter *196.02 Pass code*. **Note:** We recommend you select all the actions and functionalities unless otherwise required by the application.	0008h

Bit	Name	Information
0	Disable ABB access levels	1 = ABB access levels (service, advanced programmer, etc.; see *196.03*) disabled
1	Freeze parameter lock state	1 = Changing the parameter lock state prevented, ie. pass code 358 has no effect
2	Disable file download	1 = Loading of files to drive prevented. This applies to • firmware upgrades • safety functions module configuration • parameter restore • loading an adaptive program • loading and debugging an application program • changing home view of control panel • editing drive texts • editing the favorite parameters list on control panel • configuration settings made through control panel such as time/date formats and enabling/disabling clock display.
3	Disable FB write to hidden	1 = Access to parameters on disabled access levels from fieldbus prevented.
4…5	Reserved	
6	Protect AP	1 = Creating a backup and restoring from a backup prevented.
7	Disable panel Bluetooth	1 = Bluetooth disabled on ACS-AP-W control panel. If the drive is part of a panel bus, Bluetooth is disabled on all panels.
8…10	Reserved	
11	Disable OEM access level 1	1 = OEM access level 1 disabled
12	Disable OEM access level 2	1 = OEM access level 2 disabled
13	Disable OEM access level 3	1 = OEM access level 3 disabled
14…15	Reserved	

0000h…FFFFh	Selection of actions to be prevented by user lock.	-

6

Additional parameter data

What this chapter contains

This chapter lists the parameters with some additional data. For parameter descriptions, see chapter *Parameters* (page *39*).

Terms and abbreviations

Term	Definition
Actual signal	Signal measured or calculated by the regenerative rectifier unit. Usually can only be monitored but not adjusted; some counter-type signals can however be reset by entering the value 0.
Analog src	Parameter can be set to the value of another parameter by choosing Other, and selecting the source parameter from a list. In addition to the Other selection, the parameter may offer other pre-selected settings.
Binary src	Value of the parameter can be taken from a specific bit in another parameter value (Other). Sometimes the value can be fixed to 0 (False) or 1 (True). In addition to the Other, False and True selections, the parameter may offer other pre-selected settings.
Data	Data parameter.
FbEq32	32-bit fieldbus equivalent: Scaling between the value shown on the panel and the integer used in fieldbus communication when a 32-bit value is selected for transmission to an external system. Corresponding 16-bit scalings are listed in chapter *Parameters* (page *39*).
List	Selection list.
No.	Parameter number.
PB	Packed boolean.

Real	$\underbrace{\text{16-bit value}}_{\text{= integer value}}\ \underbrace{\text{16-bit value}}_{\text{= fractional value}}$ (31 bits + sign)
Type	Data type. See *Analog src*, *Binary src*, *List*, *PB*, *Real*.

Fieldbus addresses

Refer to the *User's manual* of the fieldbus adapter.

Parameter groups 101…107

No.	Name	Type	Range	Unit	FbEq32
101 Actual values					
101.01	DC voltage	*Real*	0.00 … 2000.00	V	100 = 1 V
101.02	Line current	*Real*	0.00…30000.00	A	100 = 1 A
101.03	Line current %	*Real*	0.0…1000.0	%	10 = 1%
101.08	Frequency	*Real*	0.00 … 100.00	Hz	100 = 1 Hz
101.09	Grid voltage	*Real*	0.00 … 2000.00	V	100 = 1 V
101.12	Power	*Real*	-30000.00 … 30000.00	kW	100 = 1 kW
101.13	Power %	*Real*	-1000.0…1000.0	%	10 = 1%
101.22	kWh supply	*Real*	-1000…1000	kWh	1 = 1 kWh
101.23	MWh supply	*Real*	-1000…1000	MWh	1 = 1 MWh
101.24	GWh supply	*Real*	-32768…32767	GWh	1 = 1 GWh
101.25	kWh motoring	*Real*	0…1000	kWh	1 = 1 kWh
101.26	MWh motoring	*Real*	0…1000	MWh	1 = 1 MWh
101.27	GWh motoring	*Real*	0…32767	GWh	1 = 1 GWh
101.28	kWh generating	*Real*	0…1000	kWh	1 = 1 kWh
101.29	MWh generating	*Real*	0…1000	MWh	1 = 1 MWh
101.30	GWh generating	*Real*	0…32767	GWh	1 = 1 GWh
101.31	Ambient temperature	*Real*	-30000.0… 30000.0	°C	10 = 1°C
101.61	Nominal supply voltage	*Real*	0…2000	V	1 = 1 V
101.62	Nominal DC voltage	*Real*	0…2000	V	1 = 1 V
101.63	Nominal current	*Real*	0…30000	A	1 = 1 A
101.64	Nominal power	*Real*	0…30000	kW	1 = 1 kW
101.70	Ambient temperature percent	*Real*	-200.00…200.00	%	100 = 1%
104 Warnings and faults					
104.01	Tripping fault	*Data*	0000h…FFFFh	-	1 = 1
104.02	Active fault 2	*Data*	0000h…FFFFh	-	1 = 1
104.03	Active fault 3	*Data*	0000h…FFFFh	-	1 = 1
104.04	Active fault 4	*Data*	0000h…FFFFh	-	1 = 1
104.05	Active fault 5	*Data*	0000h…FFFFh	-	1 = 1
104.06	Active warning 1	*Data*	0000h…FFFFh	-	1 = 1
104.07	Active warning 2	*Data*	0000h…FFFFh	-	1 = 1
104.08	Active warning 3	*Data*	0000h…FFFFh	-	1 = 1
104.09	Active warning 4	*Data*	0000h…FFFFh	-	1 = 1
104.10	Active warning 5	*Data*	0000h…FFFFh	-	1 = 1
104.11	Latest fault	*Data*	0000h…FFFFh	-	1 = 1
104.12	2nd latest fault	*Data*	0000h…FFFFh	-	1 = 1
104.13	3rd latest fault	*Data*	0000h…FFFFh	-	1 = 1
104.14	4th latest fault	*Data*	0000h…FFFFh	-	1 = 1
104.15	5th latest fault	*Data*	0000h…FFFFh	-	1 = 1
104.16	Latest warning	*Data*	0000h…FFFFh	-	1 = 1
104.17	2nd latest warning	*Data*	0000h…FFFFh	-	1 = 1
104.18	3rd latest warning	*Data*	0000h…FFFFh	-	1 = 1
104.19	4th latest warning	*Data*	0000h…FFFFh	-	1 = 1
104.20	5th latest warning	*Data*	0000h…FFFFh	-	1 = 1

No.	Name	Type	Range	Unit	FbEq32
105 Diagnostics					
105.01	On-time counter	*Real*	0…65535	d	1 = 1 d
105.02	Run-time counter	*Real*	0…65535	d	1 = 1 d
105.04	Main fan on-time counter	*Real*	0…65535	d	1 = 1 d
105.09	Time from power-up	*Real*	0…4294967295	-	1 = 1
105.11	Converter temperature %	*Real*	-40.0 … 160.0	%	10 = 1%
105.21	MCB closing time counter	*Real*	-	-	1 = 1
106 Control and status words					
106.01	Main control word	*PB*	0000h…FFFFh	-	1 = 1
106.03	FBA A transparent control word	*PB*	00000000h…FFFFFFFFh	-	1 = 1
106.04	FBA B transparent control word	*PB*	00000000h…FFFFFFFFh	-	
106.11	Main status word	*PB*	0000h…FFFFh	-	1 = 1
106.16	Drive status word 1	*PB*	0000h…FFFFh	-	1 = 1
106.17	Drive status word 2	*PB*	0000h…FFFFh	-	1 = 1
106.18	Start inhibit status word	*PB*	0000h…FFFFh	-	1 = 1
106.25	Drive inhibit status word 2	*PB*	0000h…FFFFh	-	1 = 1
106.30	MSW bit 11 sel	*Binary src*	-	-	1 = 1
106.31	MSW bit 12 sel	*Binary src*	-	-	1 = 1
106.32	MSW bit 13 sel	*Binary src*	-	-	1 = 1
106.33	MSW bit 15 sel	*Binary src*	-	-	1 = 1
106.50	User status word1	*PB*	-	-	1 = 1
106.60	User status word 1 bit 0 sel	*PB*	-	-	1 = 1
106.61	User status word 1 bit 1 sel	*PB*	-	-	1 = 1
106.62	User status word 1 bit 2 sel	*PB*	-	-	1 = 1
106.63	User status word 1 bit 3 sel	*PB*	-	-	1 = 1
106.64	User status word 1 bit 4 sel	*PB*	-	-	1 = 1
106.65	User status word 1 bit 5 sel	*PB*	-	-	1 = 1
106.66	User status word 1 bit 6 sel	*PB*	-	-	1 = 1
106.67	User status word 1 bit 7 sel	*PB*	-	-	1 = 1
106.68	User status word 1 bit 8 sel	*PB*	-	-	1 = 1
106.69	User status word 1 bit 9 sel	*PB*	-	-	1 = 1
106.70	User status word 1 bit 10 sel	*PB*	-	-	1 = 1
106.71	User status word 1 bit 11 sel	*PB*	-	-	1 = 1
106.72	User status word 1 bit 12 sel	*PB*	-	-	1 = 1
106.73	User status word 1 bit 13 sel	*PB*	-	-	1 = 1
106.74	User status word 1 bit 14 sel	*PB*	-	-	1 = 1
106.75	User status word 1 bit 15 sel	*PB*	-	-	1 = 1
107 System info					
107.03	Drive rating id	*List*	-	-	1 = 1
107.04	Firmware name	*List*	-	-	1 = 1
107.05	Firmware version	*Data*	-	-	1 = 1
107.06	Loading package name	*List*	-	-	1 = 1

No.	Name	Type	Range	Unit	FbEq32
107.07	Loading package version	*Data*	-	-	1 = 1
107.08	Bootloader version	*Data*	-	-	1 = 1
107.11	Cpu usage	*Real*	0…100	%	1 = 1%
107.13	PU logic version number	*Data*	-	-	1 = 1
107.14	FPGA logic version name	*List*	-	-	1 = 1
107.15	FPGA logic version number	*Data*	-	-	1 = 1
107.30	Adaptive program status	*Data*	0000h…FFFFh	-	1 = 1

Parameter groups 110…196

No.	Name	Type	Range	Unit	FbEq32
110 Standard DI, RO					
110.01	DI status	*PB*	0000h…FFFFh	-	1 = 1
110.02	DI delayed status	*PB*	0000h…FFFFh	-	1 = 1
110.03	DI force selection	*PB*	0000h…FFFFh	-	1 = 1
110.04	DI force data	*PB*	0000h…FFFFh	-	1 = 1
110.05	DI1 ON delay	*Real*	0.0…3000.0	s	10 = 1 s
110.06	DI1 OFF delay	*Real*	0.0…3000.0	s	10 = 1 s
110.07	DI2 ON delay	*Real*	0.0…3000.0	s	10 = 1 s
110.08	DI2 OFF delay	*Real*	0.0…3000.0	s	10 = 1 s
110.09	DI3 ON delay	*Real*	0.0…3000.0	s	10 = 1 s
110.10	DI3 OFF delay	*Real*	0.0…3000.0	s	10 = 1 s
110.11	DI4 ON delay	*Real*	0.0…3000.0	s	10 = 1 s
110.12	DI4 OFF delay	*Real*	0.0…3000.0	s	10 = 1 s
110.13	DI5 ON delay	*Real*	0.0…3000.0	s	10 = 1 s
110.14	DI5 OFF delay	*Real*	0.0…3000.0	s	10 = 1 s
110.15	DI6 ON delay	*Real*	0.0…3000.0	s	10 = 1 s
110.16	DI6 OFF delay	*Real*	0.0…3000.0	s	10 = 1 s
110.21	RO status	*PB*	0000h…FFFFh	-	1 = 1
110.24	RO1 source	*Binary src*	-	-	1 = 1
110.25	RO1 ON delay	*Real*	0.0 … 3000.0	s	10 = 1 s
110.26	RO1 OFF delay	*Real*	0.0 … 3000.0	s	10 = 1 s
110.27	RO2 source	*Binary src*	-	-	1 = 1
110.28	RO2 ON delay	*Real*	0.0 … 3000.0	s	10 = 1 s
110.29	RO2 OFF delay	*Real*	0.0 … 3000.0	s	10 = 1 s
110.30	RO3 source	*Binary src*	-	-	1 = 1
110.31	RO3 ON delay	*Real*	0.0 … 3000.00	s	10 = 1 s
110.32	RO3 OFF delay	*Real*	0.0 … 3000.00	s	10 = 1 s
110.51	DI filter time	*Real*	0.3 … 100.0	ms	10 = 1 ms
110.99	RO/DIO control word	*PB*	0000h…FFFFh	-	1 = 1
111 Standard DIO, FI, FO					
111.01	DIO status	*PB*	0000h…FFFFh	-	1 = 1
111.02	DIO delayed status	*PB*	0000h…FFFFh	-	1 = 1
111.05	DIO1 function	*List*	0…2	-	1 = 1
111.06	DIO1 output source	*Binary src*	-	-	1 = 1
111.07	DIO1 ON delay	*Real*	0.0 … 3000.0	s	10 = 1 s
111.08	DIO1 OFF delay	*Real*	0.0 … 3000.0	s	10 = 1 s
111.09	DIO2 function	*List*	0…2	-	1 = 1
111.10	DIO2 output source	*Binary src*	-		1 = 1
111.11	DIO2 ON delay	*Real*	0.0 … 3000.0	s	10 = 1 s
111.12	DIO2 OFF delay	*Real*	0.0 … 3000.0	s	10 = 1 s
111.38	Freq in 1 actual value	*Real*	0…16000	Hz	1 = 1 Hz
111.39	Freq in 1 scaled	*Real*	-32768.000 … 32767.000	-	1000 = 1
111.42	Freq in 1 min	*Real*	0…16000	Hz	1 = 1 Hz
111.43	Freq in 1 max	*Real*	0…16000	Hz	1 = 1 Hz
111.44	Freq in 1 at scaled min	*Real*	-32768.000 … 32767.000	-	1000 = 1
111.45	Freq in 1 at scaled max	*Real*	-32768.000 … 32767.000	-	1000 = 1
111.81	DIO filter time	*Real*	0.3 … 100.0	ms	10 = 1 ms

No.	Name	Type	Range	Unit	FbEq32
112 Standard AI					
112.03	AI supervision function	*List*	0…2	-	1 = 1
112.04	AI supervision selection	*PB*	0000b…1111b	-	1 = 1
112.11	AI1 actual value	*Real*	-22.000 … 22.000 mA or -11.000 … 11.000 V	mA or V	1000 = 1 mA
112.12	AI1 scaled value	*Real*	-32768.000 … 32767.000	-	1000 = 1
112.15	AI1 unit selection	*List*	-	-	1 = 1
112.16	AI1 filter time	*Real*	0.000 … 30.000	s	1000 = 1 s
112.17	AI1 min	*Real*	-22.000 … 22.000 mA or -11.000 … 11.000 V	mA or V	1000 = 1 mA
112.18	AI1 max	*Real*	-22.000 … 22.000 mA or -11.000 … 11.000 V	mA or V	1000 = 1 mA
112.19	AI1 scaled at AI1 min	*Real*	-32768.000 … 32767.000	-	1000 = 1
112.20	AI1 scaled at AI1 max	*Real*	-32768.000 … 32767.000	-	1000 = 1
112.21	AI2 actual value	*Real*	-22.000 … 22.000 mA or -11.000 … 11.000 V	mA or V	1000 = 1 mA
112.22	AI2 scaled value	*Real*	-32768.000 … 32767.000	-	1000 = 1
112.25	AI2 unit selection	*List*	-	-	1 = 1
112.26	AI2 filter time	*Real*	0.000 … 30.000	s	1000 = 1s
112.27	AI2 min	*Real*	-22.000 … 22.000 mA or -11.000 … 11.000 V	mA or V	1000 = 1 mA
112.28	AI2 max	*Real*	-22.000 … 22.000 mA or -11.000 … 11.000 V	mA or V	1000 = 1 mA
112.29	AI2 scaled at AI2 min	*Real*	-32768.000 … 32767.000	-	1000 = 1
112.30	AI2 scaled at AI2 max	*Real*	-32768.000 … 32767.000	-	1000 = 1
113 Standard AO					
113.11	AO1 actual value	*Real*	0.000 … 22.000	mA	1000 = 1 mA
113.12	AO1 source	*Analog src*	-	-	1 = 1
113.16	AO1 filter time	*Real*	0.000 … 30.000	s	1000 = 1 s
113.17	AO1 source min	*Real*	-32768.0 … 32767.0	-	10 = 1
113.18	AO1 source max	*Real*	-32768.0 … 32767.0	-	10 = 1
113.19	AO1 out at AO1 src min	*Real*	0.000 … 22.000	mA	1000 = 1 mA
113.20	AO1 out at AO1 src max	*Real*	0.000 … 22.000	mA	1000 = 1 mA
113.21	AO2 actual value	*Real*	0.000 … 22.000	mA	1000 = 1 mA
113.22	AO2 source	*Analog src*	-	-	1 = 1
113.26	AO2 filter time	*Real*	0.000 … 30.000	s	1000 = 1 s
113.27	AO2 source min	*Real*	-32768.0 … 32767.0	-	10 = 1
113.28	AO2 source max	*Real*	-32768.0 … 32767.0	-	10 = 1
113.29	AO2 out at AO2 src min	*Real*	0.000 … 22.000	mA	1000 = 1 mA
113.30	AO2 out at AO2 src max	*Real*	0.000 … 22.000	mA	1000 = 1 mA
113.91	AO1 data storage	*Real*	-327.68 … 327.67	-	100 = 1
113.92	AO2 data storage	*Real*	-327.68 … 327.67	-	100 = 1
114 Extension I/O module 1					
114.01	Module 1 type	*List*	0…4	-	1 = 1
114.02	Module 1 location	*Real*	1…254	-	1 = 1
114.03	Module 1 status	*List*	0…24	-	1 = 1
DIx (114.01 Module 1 type = FDIO-01)					
114.05	DI status	*PB*	00000000h…FFFFFFFFh	-	1 = 1
114.06	DI delayed status	*PB*	00000000h…FFFFFFFFh	-	1 = 1
114.08	DI filter time	*Real*	0.8 … 100.0	ms	10 = 1 ms

No.	Name	Type	Range	Unit	FbEq32
114.12	DI1 ON delay	Real	0.00 … 3000.00	s	100 = 1 s
114.13	DI1 OFF delay	Real	0.00 … 3000.00	s	100 = 1 s
114.17	DI2 ON delay	Real	0.00 … 3000.00	s	100 = 1 s
114.18	DI2 OFF delay	Real	0.00 … 3000.00	s	100 = 1 s
114.22	DI3 ON delay	Real	0.00 … 3000.00	s	100 = 1 s
114.23	DI3 OFF delay	Real	0.00 … 3000.00	s	100 = 1 s
Common parameters for DIOx (114.01 Module 1 type = FIO-01 or FIO-11)					
114.05	DIO status	PB	00000000h…FFFFFFFFh	-	1 = 1
114.06	DIO delayed status	PB	00000000h…FFFFFFFFh	-	1 = 1
DIO1/DIO2 (114.01 Module 1 type = FIO-01 or FIO-11)					
114.09	DIO1 configuration	List	0…1	s	1 = 1
114.10	DIO1 filter gain (Not visible when 114.01 Module 1 type = FIO-01)	List	0…3	-	1 = 1
114.11	DIO1 output source	Binary src	-	-	1 = 1
114.12	DIO1 ON delay	Real	0.0 … 3000.0	s	10 = 1 s
114.13	DIO1 OFF delay	Real	0.0 … 3000.0	s	10 = 1 s
114.14	DIO2 configuration	List	0…1	-	1 = 1
114.15	DIO2 filter gain (Not visible when 114.01 Module 1 type = FIO-01)	List	0…3	-	1 = 1
114.16	DIO2 output source	Binary src	-	-	1 = 1
114.17	DIO2 ON delay	Real	0.0 … 3000.0	s	10 = 1 s
114.18	DIO2 OFF delay	Real	0.0 … 3000.0	s	10 = 1 s
DIO3/DIO4 (114.01 Module 1 type = FIO-01)					
114.19	DIO3 configuration	List	0…1	-	1 = 1
114.21	DIO3 output source	Binary src	-	-	1 = 1
114.22	DIO3 ON delay	Real	0.0 … 3000.0	s	10 = 1 s
114.23	DIO3 OFF delay	Real	0.0 … 3000.0	s	10 = 1 s
114.24	DIO4 configuration	List	0…1	-	1 = 1
114.26	DIO4 output source	Binary src	-	-	1 = 1
114.27	DIO4 ON delay	Real	0.0 … 3000.0	s	10 = 1 s
114.28	DIO4 OFF delay	Real	0.0 … 3000.0	s	10 = 1 s
RO1/RO2 (114.01 Module 1 type = FIO-01 or FDIO-01)					
114.31	RO status	PB	0000h…FFFFh	-	1 = 1
114.34	RO1 source	Binary src	-	-	1 = 1
114.35	RO1 ON delay	Real	0.0 … 3000.0	s	10 = 1 s
114.36	RO1 OFF delay	Real	0.0 … 3000.0	s	10 = 1 s
114.37	RO2 source	Binary src	-	-	1 = 1
114.38	RO2 ON delay	Real	0.0 … 3000.0	s	10 = 1 s
114.39	RO2 OFF delay	Real	0.0 … 3000.0	s	10 = 1 s
Common parameters for AIx (114.01 Module 1 type = FIO-11 or FAIO-01)					
114.19	AI supervision function	List	0…2	-	1 = 1
114.20	AI supervision selection	PB	0000h…FFFFh	-	1 = 1
114.22	AI force sel	PB	00000000h…FFFFFFFFh	-	1 = 1
AI1/AI2 (114.01 Module 1 type = FIO-11 or FAIO-01)					
114.26	AI1 actual value	Real	-22.000 … 22.000	mA or V	1000 = 1 unit
114.27	AI1 scaled value	Real	-32768.000 … 32767.000	-	1000 = 1
114.28	AI1 force data	Real	-22.000 … 22.000	mA or V	1000 = 1 unit

No.	Name	Type	Range	Unit	FbEq32
114.29	AI1 HW switch pos	*List*	-	-	1 = 1
114.30	AI1 unit selection	*List*	-	-	1 = 1
114.31	AI1 filter gain	*List*	0…7	-	1 = 1
114.32	AI1 filter time	*Real*	0.000 … 30.000	s	1000 = 1 s
114.33	AI1 min	*Real*	-22.000 … 22.000	mA or V	1000 = 1 unit
114.34	AI1 max	*Real*	-22.000 … 22.000	mA or V	1000 = 1 unit
114.35	AI1 scaled at AI1 min	*Real*	-32768.000 … 32767.000	-	1000 = 1
114.36	AI1 scaled at AI1 max	*Real*	-32768.000 … 32767.000	-	1000 = 1
114.41	AI2 actual value	*Real*	-22.000 … 22.000	mA or V	1000 = 1 unit
114.42	AI2 scaled value	*Real*	-32768.000 … 32767.000	-	1 = 1
114.43	AI2 force data	*Real*	-22.000 … 22.000	mA or V	1000 = 1 unit
114.44	AI2 HW switch pos	*List*	-	-	1 = 1
114.45	AI2 unit selection	*List*	-	-	1 = 1
114.46	AI2 filter gain	*List*	0…7	-	1 = 1
114.47	AI2 filter time	*Real*	0.000 … 30.000	s	1000 = 1 s
114.48	AI2 min	*Real*	-22.000 … 22.000	mA or V	1000 = 1 unit
114.49	AI2 max	*Real*	-22.000 … 22.000	mA or V	1000 = 1 unit
114.50	AI2 scaled at AI2 min	*Real*	-32768.000 … 32767.000	-	1000 = 1
114.51	AI2 scaled at AI2 max	*Real*	-32768.000 … 32767.000	-	1000 = 1
AI3 (114.01 Module 1 type = FIO-11)					
114.56	AI3 actual value	*Real*	-22.000 … 22.000	mA or V	1000 = 1 unit
114.57	AI3 scaled value	*Real*	-32768.000 … 32767.000	-	1000 = 1
114.58	AI3 force data	*Real*	-22.000 … 22.000	mA or V	1000 = unit
114.59	AI3 HW switch pos	*List*	-	-	1 = 1
114.60	AI3 unit selection	*List*	-	-	1 = 1
114.61	AI3 filter gain	*List*	0…7	-	1 = 1
114.62	AI3 filter time	*Real*	0.000 … 30.000	s	1000 = 1 s
114.63	AI3 min	*Real*	-22.000 … 22.000	mA or V	1000 = 1 unit
114.64	AI3 max	*Real*	-22.000 … 22.000	mA or V	1000 = 1 unit
114.65	AI3 scaled at AI3 min	*Real*	-32768.000 … 32767.000	-	1000 = 1
114.66	AI3 scaled at AI3 max	*Real*	-32768.000 … 32767.000	-	1000 = 1
Common parameters for AOx (114.01 Module 1 type = FIO-11 or FAIO-01)					
114.71	AO force selection	*PB*	00000000h…FFFFFFFFh	-	1 = 1
AO1 (114.01 Module 1 type = FIO-11 or FAIO-01)					
114.76	AO1 actual value	*Real*	0.000 … 22.000	mA	1000 = 1 mA
114.77	AO1 source	*Analog src*	-	-	1 = 1
114.78	AO1 force data	*Real*	0.000 … 22.000	mA	1000 = 1 mA
114.79	AO1 filter time	*Real*	0.000 … 30.000	s	1000 = 1 s
114.80	AO1 source min	*Real*	-32768.0 … 32767.0	-	10 = 1
114.81	AO1 source max	*Real*	-32768.0 … 32767.0	-	10 = 1
114.82	AO1 out at AO1 src min	*Real*	0.000 … 22.000	mA	1000 = 1 mA
114.83	AO1 out at AO1 src max	*Real*	0.000 … 22.000	mA	1000 = 1 mA
AO2 (114.01 Module 1 type = FAIO-01)					
114.86	AO2 actual value	*Real*	0.000 … 22.000	mA	1000 = 1 mA
114.87	AO2 source	*Analog src*	-	-	1 = 1
114.88	AO2 force data	*Real*	0.000 … 22.000	mA	1000 = 1 mA
114.89	AO2 filter time	*Real*	0.000 … 30.000	s	1000 = 1 s
114.90	AO2 source min	*Real*	-32768.0 … 32767.0	-	10 = 1
114.91	AO2 source max	*Real*	-32768.0 … 32767.0	-	10 = 1

No.	Name	Type	Range	Unit	FbEq32
114.92	AO2 out at AO2 src min	*Real*	0.000 … 22.000	mA	1000 = 1 mA
114.93	AO2 out at AO2 src max	*Real*	0.000 … 22.000	mA	1000 = 1 mA
115 Extension I/O module 2					
115.01	Module 2 type	*List*	0…4	-	1 = 1
115.02	Module 2 location	*Real*	1…254	-	1 = 1
115.03	Module 2 status	*List*	0…24	-	1 = 1
DIx (115.01 Module 2 type = FDIO-01)					
115.05	DI status	*PB*	00000000h…FFFFFFFFh	-	1 = 1
115.06	DI delayed status	*PB*	00000000h…FFFFFFFFh	-	1 = 1
115.08	DI filter time	*Real*	0.8 … 100.0	ms	10 = 1 ms
115.12	DI1 ON delay	*Real*	0.00 … 3000.00	s	100 = 1 s
115.13	DI1 OFF delay	*Real*	0.00 … 3000.00	s	100 = 1 s
115.17	DI2 ON delay	*Real*	0.00 … 3000.00	s	100 = 1 s
115.18	DI2 OFF delay	*Real*	0.00 … 3000.00	s	100 = 1 s
115.22	DI3 ON delay	*Real*	0.00 … 3000.00	s	100 = 1 s
115.23	DI3 OFF delay	*Real*	0.00 … 3000.00	s	100 = 1 s
Common parameters for DIOx (115.01 Module 2 type = FIO-01 or FIO-11)					
115.05	DIO status	*PB*	00000000h…FFFFFFFFh	-	1 = 1
115.06	DIO delayed status	*PB*	00000000h…FFFFFFFFh	-	1 = 1
DIO1/DIO2 (115.01 Module 2 type = FIO-01 or FIO-11)					
115.09	DIO1 configuration	*List*	0…1	-	1 = 1
115.10	DIO1 filter gain (Not visible when *115.01 Module 2 type* = *FIO-01*)	*List*	0…3	-	1 = 1
115.11	DIO1 output source	*Binary src*	-	-	1 = 1
115.12	DIO1 ON delay	*Real*	0.0 … 3000.0	s	10 = 1 s
115.13	DIO1 OFF delay	*Real*	0.0 … 3000.0	s	10 = 1 s
115.14	DIO2 configuration	*List*	0…1	-	1 = 1
115.15	DIO2 filter gain (Not visible when *115.01 Module 2 type* = *FIO-01*)	*List*	0…3	-	1 = 1
115.16	DIO2 output source	*Binary src*	-	-	1 = 1
115.17	DIO2 ON delay	*Real*	0.0 … 3000.0	s	10 = 1
115.18	DIO2 OFF delay	*Real*	0.0 … 3000.0	s	10 = 1
DIO3/DIO4 (115.01 Module 2 type = FIO-01)					
115.19	DIO3 configuration	*List*	0…1	-	1 = 1
115.21	DIO3 output source	*Binary src*	-	-	1 = 1
115.22	DIO3 ON delay	*Real*	0.0 … 3000.0	s	10 = 1 s
115.23	DIO3 OFF delay	*Real*	0.0 … 3000.0	s	10 = 1 s
115.24	DIO4 configuration	*List*	0…1	-	1 = 1
115.26	DIO4 output source	*Binary src*	-	-	1 = 1
115.27	DIO4 ON delay	*Real*	0.0 … 3000.0	s	10 = 1 s
115.28	DIO4 OFF delay	*Real*	0.0 … 3000.0	s	10 = 1 s
RO1/RO2 (115.01 Module 2 type = FIO-01 or FDIO-01)					
115.31	RO status	*PB*	0000h…FFFFh	-	1 = 1
115.34	RO1 source	*Binary src*	-	-	1 = 1
115.35	RO1 ON delay	*Real*	0.0 … 3000.0	s	10 = 1 s
115.36	RO1 OFF delay	*Real*	0.0 … 3000.0	s	10 = 1 s
115.37	RO2 source	*Binary src*	-	-	1 = 1

No.	Name	Type	Range	Unit	FbEq32
115.38	RO2 ON delay	*Real*	0.0 … 3000.0	s	10 = 1 s
115.39	RO2 OFF delay	*Real*	0.0 … 3000.0	s	10 = 1 s
Common parameters for AIx (115.01 Module 2 type = FIO-11 or FAIO-01)					
115.19	AI supervision function	*List*	0…2	-	1 = 1
115.20	AI supervision selection	*PB*	0000h…FFFFh	-	1 = 1
115.22	AI force sel	*PB*	00000000h…FFFFFFFFh	-	1 = 1
AI1/AI2 (115.01 Module 2 type = FIO-11 or FAIO-01)					
115.26	AI1 actual value	*Real*	-22.000 … 22.000	mA or V	1000 = 1 unit
115.27	AI1 scaled value	*Real*	-32768.000 … 32767.000	-	1000 = 1
115.28	AI1 force data	*Real*	-22.000 … 22.000	mA or V	1000 = 1 unit
115.29	AI1 HW switch pos	*List*	-	-	1 = 1
115.30	AI1 unit selection	*List*	-	-	1 = 1
115.31	AI1 filter gain	*List*	0…7	-	1 = 1
115.32	AI1 filter time	*Real*	0.000 … 30.000	s	1000 = 1 s
115.33	AI1 min	*Real*	-22.000 … 22.000	mA or V	1000 = 1 unit
115.34	AI1 max	*Real*	-22.000 … 22.000	mA or V	1000 = 1 unit
115.35	AI1 scaled at AI1 min	*Real*	-32768.000 … 32767.000	-	1000 = 1
115.36	AI1 scaled at AI1 max	*Real*	-32768.000 … 32767.000	-	1000 = 1
115.41	AI2 actual value	*Real*	-22.000 … 22.000	mA or V	1000 = 1 unit
115.42	AI2 scaled value	*Real*	-32768.000 … 32767.000	-	1000 = 1
115.43	AI2 force data	*Real*	-22.000 … 22.000	mA or V	1000 = 1 unit
115.44	AI2 HW switch pos	*List*	-	-	1 = 1
115.45	AI2 unit selection	*List*	-	-	1 = 1
115.46	AI2 filter gain	*List*	0…7	-	1 = 1
115.47	AI2 filter time	*Real*	0.000 … 30.000	s	1000 = 1 s
115.48	AI2 min	*Real*	-22.000 … 22.000	mA or V	1000 = 1 unit
115.49	AI2 max	*Real*	-22.000 … 22.000	mA or V	1000 = 1 unit
115.50	AI2 scaled at AI2 min	*Real*	-32768.000 … 32767.000	-	1000 = 1
115.51	AI2 scaled at AI2 max	*Real*	-32768.000 … 32767.000	-	1000 = 1
AI3 (115.01 Module 2 type = FIO-11)					
115.56	AI3 actual value	*Real*	-22.000 … 22.000	mA or V	1000 = 1 unit
115.57	AI3 scaled value	*Real*	-32768.000 … 32767.000	-	1000 = 1
115.58	AI3 force data	*Real*	-22.000 … 22.000	mA or V	1000 = 1 unit
115.59	AI3 HW switch pos	*List*	-	-	1 = 1
115.60	AI3 unit selection	*List*	-	-	1 = 1
115.61	AI3 filter gain	*List*	0…7	-	1 = 1
115.62	AI3 filter time	*Real*	0.000 … 30.000	s	1000 = 1 s
115.63	AI3 min	*Real*	-22.000 … 22.000	mA or V	1000 = 1 unit
115.64	AI3 max	*Real*	-22.000 … 22.000	mA or V	1000 = 1 unit
115.65	AI3 scaled at AI3 min	*Real*	-32768.000 … 32767.000	-	1000 = 1
115.66	AI3 scaled at AI3 max	*Real*	-32768.000 … 32767.000	-	1000 = 1
Common parameters for AOx (115.01 Module 2 type = FIO-11 or FAIO-01)					
115.71	AO force selection	*PB*	00000000h…FFFFFFFFh	-	1 = 1
AO1 (115.01 Module 2 type = FIO-11 or FAIO-01)					
115.76	AO1 actual value	*Real*	0.000 … 22.000	mA	1000 = 1 mA
115.77	AO1 source	*Analog src*	-	-	1 = 1
115.78	AO1 force data	*Real*	0.000 … 22.000	mA	1000 = 1 mA
115.79	AO1 filter time	*Real*	0.000 … 30.000	s	1000 = 1 s
115.80	AO1 source min	*Real*	-32768.0 … 32767.0	-	10 = 1

No.	Name	Type	Range	Unit	FbEq32
115.81	AO1 source max	*Real*	-32768.0 … 32767.0	-	10 = 1
115.82	AO1 out at AO1 src min	*Real*	0.000 … 22.000	mA	1000 = 1 mA
115.83	AO1 out at AO1 src max	*Real*	0.000 … 22.000	mA	1000 = 1 mA
AO2 (115.01 Module 2 type = FAIO-01)					
115.86	AO2 actual value	*Real*	0.000 … 22.000	mA	1000 = 1 mA
115.87	AO2 source	*Analog src*	-	-	1 = 1
115.88	AO2 force data	*Real*	0.000 … 22.000	mA	1000 = 1 mA
115.89	AO2 filter time	*Real*	0.000 … 30.000	s	1000 = 1 s
115.90	AO2 source min	*Real*	-32768.0 … 32767.0	-	10 = 1
115.91	AO2 source max	*Real*	-32768.0 … 32767.0	-	10 = 1
115.92	AO2 out at AO2 src min	*Real*	0.000 … 22.000	mA	1000 = 1 mA
115.93	AO2 out at AO2 src max	*Real*	0.000 … 22.000	mA	1000 = 1 mA
116 Extension I/O module 3					
116.01	Module 3 type	*List*	0…4	-	1 = 1
116.02	Module 3 location	*Real*	1…254	-	1 = 1
116.03	Module 3 status	*List*	0…24	-	1 = 1
DIx (116.01 Module 3 type = FDIO-01)					
116.05	DI status	*PB*	00000000h…FFFFFFFFh	-	1 = 1
116.06	DI delayed status	*PB*	00000000h…FFFFFFFFh	-	1 = 1
116.08	DI filter time	*Real*	0.8 … 100.0	ms	10 = 1 ms
116.12	DI1 ON delay	*Real*	0.00 … 3000.00	s	100 = 1 s
116.13	DI1 OFF delay	*Real*	0.00 … 3000.00	s	100 = 1 s
116.17	DI2 ON delay	*Real*	0.00 … 3000.00	s	100 = 1 s
116.18	DI2 OFF delay	*Real*	0.00 … 3000.00	s	100 = 1 s
116.22	DI3 ON delay	*Real*	0.00 … 3000.00	s	100 = 1 s
116.23	DI3 OFF delay	*Real*	0.00 … 3000.00	s	100 = 1 s
Common parameters for DIOx (116.01 Module 3 type = FIO-01 or FIO-11)					
116.05	DIO status	*PB*	00000000h…FFFFFFFFh	-	1 = 1
116.06	DIO delayed status	*PB*	00000000h…FFFFFFFFh	-	1 = 1
DIO1/DIO2 (116.01 Module 3 type = FIO-01 or FIO-11)					
116.09	DIO1 configuration	*List*	0…1	-	1 = 1
116.10	DIO1 filter gain (Not visible when *116.01 Module 3 type* = *FIO-01*)	*List*	0…3	-	1 = 1
116.11	DIO1 output source	*Binary src*	-	-	1 = 1
116.12	DIO1 ON delay	*Real*	0.0 … 3000.0	s	10 = 1 s
116.13	DIO1 OFF delay	*Real*	0.0 … 3000.0	s	10 = 1 s
116.14	DIO2 configuration	*List*	0…1	-	1 = 1
116.15	DIO2 filter gain (Not visible when *116.01 Module 3 type* = *FIO-01*)	*List*	0…3	-	1 = 1
116.16	DIO2 output source	*Binary src*	-	-	1 = 1
116.17	DIO2 ON delay	*Real*	0.0 … 3000.0	s	10 = 1 s
116.18	DIO2 OFF delay	*Real*	0.0 … 3000.0	s	10 = 1 s
DIO3/DIO4 (116.01 Module 3 type = FIO-01)					
116.19	DIO3 configuration	*List*	0…1	-	1 = 1
116.21	DIO3 output source	*Binary src*	-	-	1 = 1
116.22	DIO3 ON delay	*Real*	0.0 … 3000.0	s	10 = 1 s
116.23	DIO3 OFF delay	*Real*	0.0 … 3000.0	s	10 = 1 s

No.	Name	Type	Range	Unit	FbEq32
116.24	DIO4 configuration	*List*	0…1	-	1 = 1
116.26	DIO4 output source	*Binary src*	-	-	1 = 1
116.27	DIO4 ON delay	*Real*	0.0 … 3000.0	s	10 = 1 s
116.28	DIO4 OFF delay	*Real*	0.0 … 3000.0	s	10 = 1 s
RO1/RO2 (116.01 Module 3 type = FIO-01 or FDIO-01)					
116.31	RO status	*PB*	0000h…FFFFh	-	1 = 1
116.34	RO1 source	*Binary src*	-	-	1 = 1
116.35	RO1 ON delay	*Real*	0.0 … 3000.0	s	10 = 1 s
116.36	RO1 OFF delay	*Real*	0.0 … 3000.0	s	10 = 1 s
116.37	RO2 source	*Binary src*	-	-	1 = 1
116.38	RO2 ON delay	*Real*	0.0 … 3000.0	s	10 = 1 s
116.39	RO2 OFF delay	*Real*	0.0 … 3000.0	s	10 = 1 s
Common parameters for AIx (116.01 Module 3 type = FIO-11 or FAIO-01)					
116.19	AI supervision function	*List*	0…2	-	1 = 1
116.20	AI supervision selection	*PB*	0000h…FFFFh	-	1 = 1
116.22	AI force sel	*PB*	00000000h…FFFFFFFFh	-	1 = 1
AI1/AI2 (116.01 Module 3 type = FIO-11 or FAIO-01)					
116.26	AI1 actual value	*Real*	-22.000 … 22.000	mA or V	1000 = 1 unit
116.27	AI1 scaled value	*Real*	-32768.000 … 32767.000	-	1000 = 1
116.28	AI1 force data	*Real*	-22.000 … 22.000	mA or V	1000 = 1 unit
116.29	AI1 HW switch pos	*List*	-	-	1 = 1
116.30	AI1 unit selection	*List*	-	-	1 = 1
116.31	AI1 filter gain	*List*	0…7	-	1 = 1
116.32	AI1 filter time	*Real*	0.000 … 30.000	s	1000 = 1 s
116.33	AI1 min	*Real*	-22.000 … 22.000	mA or V	1000 = 1 unit
116.34	AI1 max	*Real*	-22.000 … 22.000	mA or V	1000 = 1 unit
116.35	AI1 scaled at AI1 min	*Real*	-32768.000 … 32767.000	-	1000 = 1
116.36	AI1 scaled at AI1 max	*Real*	-32768.000 … 32767.000	-	1000 = 1
116.41	AI2 actual value	*Real*	-22.000 … 22.000	mA or V	1000 = 1 unit
116.42	AI2 scaled value	*Real*	-32768.000 … 32767.000	-	1000 = 1
116.43	AI2 force data	*Real*	-22.000 … 22.000	mA or V	1000 = 1 unit
116.44	AI2 HW switch pos	*List*	-	-	1 = 1
116.45	AI2 unit selection	*List*	-	-	1 = 1
116.46	AI2 filter gain	*List*	0…7	-	1 = 1
116.47	AI2 filter time	*Real*	0.000 … 30.000	s	1000 = 1 s
116.48	AI2 min	*Real*	-22.000 … 22.000	mA or V	1000 = 1 unit
116.49	AI2 max	*Real*	-22.000 … 22.000	mA or V	1000 = 1 unit
116.50	AI2 scaled at AI2 min	*Real*	-32768.000 … 32767.000	-	1000 = 1
116.51	AI2 scaled at AI2 max	*Real*	-32768.000 … 32767.000	-	1000 = 1
AI3 (116.01 Module 3 type = FIO-11)					
116.56	AI3 actual value	*Real*	-22.000 … 22.000	mA or V	1000 = 1 unit
116.57	AI3 scaled value	*Real*	-32768.000 … 32767.000	-	1000 = 1
116.58	AI3 force data	*Real*	-22.000 … 22.000	mA or V	1000 = 1 unit
116.59	AI3 HW switch pos	*List*	-	-	1 = 1
116.60	AI3 unit selection	*List*	-	-	1 = 1
116.61	AI3 filter gain	*List*	0…7	-	1 = 1
116.62	AI3 filter time	*Real*	0.000 … 30.000	s	1000 = 1 s
116.63	AI3 min	*Real*	-22.000 … 22.000	mA or V	1000 = 1 unit
116.64	AI3 max	*Real*	-22.000 … 22.000	mA or V	1000 = 1 unit

No.	Name	Type	Range	Unit	FbEq32
116.65	AI3 scaled at AI3 min	Real	-32768.000 … 32767.000	-	1000 = 1
116.66	AI3 scaled at AI3 max	Real	-32768.000 … 32767.000	-	1000 = 1
Common parameters for AOx (116.01 Module 3 type = FIO-11 or FAIO-01)					
116.71	AO force selection	PB	00000000h…FFFFFFFFh	-	1 = 1
AO1 (116.01 Module 3 type = FIO-11 or FAIO-01)					
116.76	AO1 actual value	Real	0.000 … 22.000	mA	1000 = 1 mA
116.77	AO1 source	Analog src	-	-	1 = 1
116.78	AO1 force data	Real	0.000 … 22.000	mA	1000 = 1 mA
116.79	AO1 filter time	Real	0.000 … 30.000	s	1000 = 1 s
116.80	AO1 source min	Real	-32768.0 … 32767.0	-	10 = 1
116.81	AO1 source max	Real	-32768.0 … 32767.0	-	10 = 1
116.82	AO1 out at AO1 src min	Real	0.000 … 22.000	mA	1000 = 1 mA
116.83	AO1 out at AO1 src max	Real	0.000 … 22.000	mA	1000 = 1 mA
AO2 (116.01 Module 3 type = FAIO-01)					
116.86	AO2 actual value	Real	0.000 … 22.000	mA	1000 = 1 mA
116.87	AO2 source	Analog src	-	-	1 = 1
116.88	AO2 force data	Real	0.000 … 22.000	mA	1000 = 1 mA
116.89	AO2 filter time	Real	0.000 … 30.000	s	1000 = 1 s
116.90	AO2 source min	Real	-32768.0 … 32767.0	-	10 = 1
116.91	AO2 source max	Real	-32768.0 … 32767.0	-	10 = 1
116.92	AO2 out at AO2 src min	Real	0.000 … 22.000	mA	1000 = 1 mA
116.93	AO2 out at AO2 src max	Real	0.000 … 22.000	mA	1000 = 1 mA
119 Operation mode					
119.03	Parallel converter mode	List	0…2	-	1 = 1
119.11	Ext1/Ext2 sel	Binary src	-	-	1 = 1
119.17	Local ctrl disable	List	0…1	-	1 = 1
120 Start/stop					
120.01	Ext1 commands	List	0…16	-	1 = 1
120.02	Ext1 start trigger	List	0…1	-	1 = 1
120.03	Ext1 in1	Binary src	-	-	1 = 1
120.04	Ext1 in2	Binary src	-	-	1 = 1
120.06	Ext2 commands	List	0…16	-	1 = 1
120.07	Ext2 start trigger	List	0…1	-	1 = 1
120.08	Ext2 in1	Binary src	-	-	1 = 1
120.09	Ext2 in2	Binary src	-	-	1 = 1
120.12	Run enable 1	Binary src	-	-	1 = 1
120.19	Enable start signal	Binary src	-	-	1 = 1
120.20	MCB2 feedback source	Binary src	-	-	1 = 1
120.21	Delay for MCB DI3 supervision	Real	0.00…8.00	s	100 = 1 s
120.22	Max current for MCB closing	Real	0…10	%	1 = 1%
120.23	Max DC charging time	Real	0.00 … 10.00	s	100 = 1 s
120.25	MCB closing level	Real	20…100	%	1 = 1%
120.26	Maximum dU/dt	Real	0 … 200	V/s	1 = 1 V/s
120.27	Start delay	Real	0.00 … 10.00	s	100 = 1 s
120.28	MCB relay timing	Real	-6.00 … 6.00	s	100 = 1 s
120.29	Diode mode	Binary src	-	-	1 = 1
120.45	Charging counter disable	List	0…1	-	1 = 1

No.	Name	Type	Range	Unit	FbEq32
120.50	Charging overload event sel	*List*	0…2	-	1 = 1
121 Start/stop mode					
121.04	Emergency stop mode	*List*	0…2	-	1 = 1
121.05	Emergency stop source	*Binary src*	-	-	1 = 1
131 Fault functions					
131.01	External event 1 source	*Binary src*	-	-	1 = 1
131.02	External event 1 type	*List*	0…3	-	1 = 1
131.03	External event 2 source	*Binary src*	-	-	1 = 1
131.04	External event 2 type	*List*	0…3	-	1 = 1
131.05	External event 3 source	*Binary src*	-	-	1 = 1
131.06	External event 3 type	*List*	0…3	-	1 = 1
131.07	External event 4 source	*Binary src*	-	-	1 = 1
131.08	External event 4 type	*List*	0…3	-	1 = 1
131.09	External event 5 source	*Binary src*	-	-	1 = 1
131.10	External event 5 type	*List*	0…3	-	1 = 1
131.11	Fault reset selection	*Binary src*	-	-	1 = 1
131.12	Autoreset selection	*PB*	0000h…FFFFh	-	1 = 1
131.13	User selectable fault	*PB*	0000h…FFFFh	-	1 = 1
131.14	Number of trials	*Real*	0…5	-	1 = 1
131.15	Total trials time	*Real*	1.0 … 600.0	s	10 = 1 s
131.16	Delay time	*Real*	0.0 … 120.0	s	10 = 1 s
131.28	Ext earth leakage signal source	*Binary src*	-	-	1 = 1
131.29	Ext earth leakage action	*List*	0…1	-	1 = 1
131.32	Aux circuit breaker fault source	*Binary src*	-	-	1 = 1
131.33	Cabinet temperature fault source	*Binary src*	-	-	1 = 1
131.34	Cabinet temperature supervision	*List*	0…1	-	1 = 1
131.35	Main fan fault function	*List*	0…2	-	1 = 1
131.38	Fuse trip fault source	*Binary src*	-	-	1 = 1
131.39	Brake chopper fault source	*Binary src*	-	-	1 = 1
131.40	Disable warning messages	*PB*	0000h…FFFFh	-	1 = 1
131.55	Ext I/O comm loss event	*List*	0…2	-	1 = 1
133 Generic timer & counter					
133.01	Counter status	*PB*	0000h…FFFFh	-	1 = 1
133.10	On-time 1 act	*Real*	0…4294967295	s	1 = 1
133.11	On-time 1 limit	*Real*	0…4294967295	s	1 = 1
133.12	On-time 1 func	*PB*	0000h…FFFFh	-	1 = 1
133.13	On-time 1 src	*Binary src*	-	-	1 = 1
133.14	On-time 1 warn sel	*List*	-	-	1 = 1
133.20	On-time 2 act	*Real*	0…4294967295	s	1 = 1
133.21	On-time 2 limit	*Real*	0…4294967295	s	1 = 1
133.22	On-time 2 func	*PB*	0000h…FFFFh	-	1 = 1
133.23	On-time 2 src	*Binary src*	-	-	1 = 1
133.24	On-time 2 warn sel	*List*	-	-	1 = 1

No.	Name	Type	Range	Unit	FbEq32
133.30	Edge count 1 act	*Real*	0…4294967295	-	1 = 1
133.31	Edge count 1 limit	*Real*	0…4294967295	-	1 = 1
133.32	Edge count 1 func	*PB*	0000h…FFFFh	-	1 = 1
133.33	Edge count 1 src	*Binary src*	-	-	1 = 1
133.34	Edge count 1 div	*Real*	1…4294967295	-	1 = 1
133.35	Edge count 1 warn sel	*List*	-	-	1 = 1
133.40	Edge count 2 act	*Real*	0…4294967295	-	1 = 1
133.41	Edge count 2 limit	*Real*	0…4294967295	-	1 = 1
133.42	Edge count 2 func	*PB*	0000h…FFFFh	-	1 = 1
133.43	Edge count 2 src	*Binary src*	-	-	1 = 1
133.44	Edge count 2 div	*Real*	1…4294967295	-	1 = 1
133.45	Edge count 2 warn sel	*List*	-	-	1 = 1
133.50	Value count 1 act	*Real*	-2147483008 … 2147483008	-	1 = 1
133.51	Value count 1 limit	*Real*	-2147483008 … 2147483008	-	1 = 1
133.52	Value count 1 func	*PB*	0000h…FFFFh	-	1 = 1
133.53	Value count 1 src	*Analog src*	-	-	1 = 1
133.54	Value count 1 div	*Real*	0.001 … 2147483.000	-	1000 = 1
133.55	Value count 1 warn sel	*List*	-	-	1 = 1
133.60	Value count 2 act	*Real*	-2147483008 … 2147483008	-	1 = 1
133.61	Value count 2 limit	*Real*	-2147483008 … 2147483008	-	1 = 1
133.62	Value count 2 func	*PB*	0000h…FFFFh	-	1 = 1
133.63	Value count 2 src	*Analog src*	-	-	1 = 1
133.64	Value count 2 div	*Real*	0.001 … 2147483.000	-	1000 = 1
133.65	Value count 2 warn sel	*List*	-	-	1 = 1
136 Load analyzer					
136.01	PVL signal source	*Analog src*	-	-	1 = 1
136.02	PVL filter time	*Real*	0.00 … 120.00	s	100 = 1 s
136.06	AL2 signal source	*Analog src*	-	-	1 = 1
136.07	AL2 signal scaling	*Real*	0.00 … 32767.00	-	100 = 1
136.09	Reset loggers	*List*	0…3	-	1 = 1
136.10	PVL peak value	*Real*	-32768.00 … 32767.00	-	100 = 1
136.11	PVL peak date	*Data*	-	-	1 = 1
136.12	PVL peak time	*Data*	-	-	1 = 1
136.13	PVL current at peak	*Real*	-32768.00 … 32767.00	A	100 = 1 A
136.14	PVL DC voltage at peak	*Real*	0.00 … 2000.00	V	100 = 1 V
136.15	PVL power at peak	*Real*	-32768.0 … 32767.0	kW	10 = 1 kW
136.16	PVL reset date	*Data*	-	-	1 = 1
136.17	PVL reset time	*Data*	-	-	1 = 1
136.20	AL1 below 10%	*Real*	0.00 … 100.00	%	100 = 1%
136.21	AL1 10 to 20%	*Real*	0.00 … 100.00	%	100 = 1%
136.22	AL1 20 to 30%	*Real*	0.00 … 100.00	%	100 = 1%
136.23	AL1 30 to 40%	*Real*	0.00 … 100.00	%	100 = 1%
136.24	AL1 40 to 50%	*Real*	0.00 … 100.00	%	100 = 1%
136.25	AL1 50 to 60%	*Real*	0.00 … 100.00	%	100 = 1%
136.26	AL1 60 to 70%	*Real*	0.00 … 100.00	%	100 = 1%
136.27	AL1 70 to 80%	*Real*	0.00 … 100.00	%	100 = 1%
136.28	AL1 80 to 90%	*Real*	0.00 … 100.00	%	100 = 1%
136.29	AL1 over 90%	*Real*	0.00 … 100.00	%	100 = 1%
136.40	AL2 below 10%	*Real*	0.00 … 100.00	%	100 = 1%

No.	Name	Type	Range	Unit	FbEq32
136.41	AL2 10 to 20%	*Real*	0.00 … 100.00	%	100 = 1%
136.42	AL2 20 to 30%	*Real*	0.00 … 100.00	%	100 = 1%
136.43	AL2 30 to 40%	*Real*	0.00 … 100.00	%	100 = 1%
136.44	AL2 40 to 50%	*Real*	0.00 … 100.00	%	100 = 1%
136.45	AL2 50 to 60%	*Real*	0.00 … 100.00	%	100 = 1%
136.46	AL2 60 to 70%	*Real*	0.00 … 100.00	%	100 = 1%
136.47	AL2 70 to 80%	*Real*	0.00 … 100.00	%	100 = 1%
136.48	AL2 80 to 90%	*Real*	0.00 … 100.00	%	100 = 1%
136.49	AL2 over 90%	*Real*	0.00 … 100.00	%	100 = 1%
136.50	AL2 reset date	*Data*	-	-	1 = 1
136.51	AL2 reset time	*Data*	-	-	1 = 1
147 Data storage					
147.01	Data storage 1 real32	*Real*	32768.000… 32767.000	-	1000 = 1
147.02	Data storage 2 real32	*Real*	32768.000… 32767.000	-	1000 = 1
147.03	Data storage 3 real32	*Real*	32768.000… 32767.000	-	1000 = 1
147.04	Data storage 4 real32	*Real*	32768.000… 32767.000	-	1000 = 1
147.05	Data storage 5 real32	*Real*	32768.000… 32767.000	-	1000 = 1
147.06	Data storage 6 real32	*Real*	32768.000… 32767.000	-	1000 = 1
147.07	Data storage 7 real32	*Real*	32768.000… 32767.000	-	1000 = 1
147.08	Data storage 8 real32	*Real*	32768.000… 32767.000	-	1000 = 1
147.11	Data storage 1 int32	*Real*	-2147483648…2147483647	-	1 = 1
147.12	Data storage 2 int32	*Real*	-2147483648…2147483647	-	1 = 1
147.13	Data storage 3 int32	*Real*	-2147483648…2147483647	-	1 = 1
147.14	Data storage 4 int32	*Real*	-2147483648…2147483647	-	1 = 1
147.15	Data storage 5 int32	*Real*	-2147483648…2147483647	-	1 = 1
147.16	Data storage 6 int32	*Real*	-2147483648…2147483647	-	1 = 1
147.17	Data storage 7 int32	*Real*	-2147483648…2147483647	-	1 = 1
147.18	Data storage 8 int32	*Real*	-2147483648…2147483647	-	1 = 1
147.21	Data storage 1 int16	*Real*	-32768…32767	-	1 = 1
147.22	Data storage 2 int16	*Real*	-32768…32767	-	1 = 1
147.23	Data storage 3 int16	*Real*	-32768…32767	-	1 = 1
147.24	Data storage 4 int16	*Real*	-32768…32767	-	1 = 1
147.25	Data storage 5 int16	*Real*	-32768…32767	-	1 = 1
147.26	Data storage 6 int16	*Real*	-32768…32767	-	1 = 1
147.27	Data storage 7 int16	*Real*	-32768…32767	-	1 = 1
147.28	Data storage 8 int16	*Real*	-32768…32767	-	1 = 1
149 Panel port communication					
149.01	Node ID number	*Real*	1…32	-	1 = 1
149.03	Baud rate	*List*	1…5	-	1 = 1
149.04	Communication loss time	*Real*	0.3 … 3000.0	s	10 = 1 s
149.05	Communication loss action	*List*	0…1	-	1 = 1
149.06	Refresh settings	*List*	0…1	-	1 = 1
150 FBA					
150.01	FBA A enable	*List*	0…3	-	1 = 1
150.02	FBA A comm loss func	*List*	0…5	-	1 = 1
150.03	FBA A comm loss t out	*Real*	0.1 … 6553.5	s	10 = 1 s
150.07	FBA A act1 type	*List*	1…2	-	1 = 1
150.08	FBA A act2 type	*List*	1…2	-	1 = 1

No.	Name	Type	Range	Unit	FbEq32
150.10	FBA A act1 transparent source	*Analog src*	-	-	1 = 1
150.11	FBA A act2 transparent source	*Analog src*	-	-	1 = 1
150.12	FBA A debug mode	*List*	0…1	-	1 = 1
150.13	FBA A control word	*Data*	00000000h …FFFFFFFFh	-	1 = 1
150.16	FBA A status word	*Data*	00000000h …FFFFFFFFh	-	1 = 1
150.17	FBA A actual value 1	*Real*	-2147483648 …2147483647	-	1 = 1
150.18	FBA A actual value 2	*Real*	-2147483648 …2147483647	-	1 = 1
150.21	FBA A timelevel sel	*List*	0…3	-	1 = 1
150.31	FBA B enable	*List*	0…3	-	1 = 1
150.32	FBA B comm loss func	*List*	0…5	-	1 = 1
150.33	FBA B comm loss timeout	*Real*	0.1 … 6553.5	s	10 = 1 s
150.37	FBA B act1 type	*List*	1…2	-	1 = 1
150.38	FBA B act2 type	*List*	1…2	-	1 = 1
150.39	FBA B SW transparent source	*Analog src*	-	-	1 = 1
150.40	FBA B act1 transparent source	*Analog src*	-	-	1 = 1
150.41	FBA B act2 transparent source	*Analog src*	-	-	1 = 1
150.42	FBA B debug mode	*Data*	0…1	-	1 = 1
150.43	FBA B control word	*Real*	00000000h … FFFFFFFFh	-	1 = 1
150.46	FBA B status word	*Data*	00000000h … FFFFFFFFh	-	1 = 1
150.47	FBA B actual value 1	*Real*	-2147483648 …2147483647	-	1 = 1
150.48	FBA B actual value 2	*Real*	-2147483648 …2147483647	-	1 = 1
150.51	FBA B timelevel sel	*List*	0…3	-	1 = 1
151 FBA A settings					
151.01	FBA A type	*List*	-	-	1 = 1
151.02	FBA A Par2	*Real*	0…65535	-	1 = 1
…	…	…	…	…	…
151.26	FBA A Par26	*Real*	0…65535	-	1 = 1
151.27	FBA A par refresh	*List*	0…1	-	1 = 1
151.28	FBA A par table ver	*Data*	-	-	1 = 1
151.29	FBA A drive type code	*Real*	0…65535	-	1 = 1
151.30	FBA A mapping file ver	*Real*	0…65535	-	1 = 1
151.31	D2FBA A comm status	*List*	0…6	-	1 = 1
151.32	FBA A comm SW ver	*Data*	-	-	1 = 1
151.33	FBA A appl SW ver	*Data*	-	-	1 = 1
152 FBA A data in					
152.01	FBA A data in1	*List*	-	-	1 = 1
…	…	…	…	…	…
152.12	FBA A data in12	*List*	-	-	1 = 1
153 FBA A data out					
153.01	FBA data out1	*List*	-	-	1 = 1
…	…	…	…	…	…
153.12	FBA data out12	*List*	-	-	1 = 1
154 FBA B settings					
154.01	FBA B type	*List*	-	-	1 = 1

No.	Name	Type	Range	Unit	FbEq32
154.02	FBA B Par2	*Real*	0…65535	-	1 = 1
…	…	…	…	…	
154.26	FBA B Par26	*Real*	0…65535	-	1 = 1
154.27	FBA B par refresh	*List*	0…1	-	1 = 1
154.28	FBA B par table ver	*Data*	-	-	1 = 1
154.29	FBA B drive type code	*Real*	0…65535	-	1 = 1
154.30	FBA B mapping file ver	*Real*	0…65535	-	1 = 1
154.31	D2FBA B comm status	*List*	0…6	-	1 = 1
154.32	FBA B comm SW ver	*Data*	-	-	1 = 1
154.33	FBA B appl SW ver	*Data*	-	-	1 = 1
155 FBA B data in					
155.01	FBA B data in1	*List*	-	-	1 = 1
…	…	…	…	…	
155.12	FBA B data in12	*List*	-	-	1 = 1
156 FBA B data out					
156.01	FBA B data out1	*List*	-	-	1 = 1
…	…	…	…	…	
156.12	FBA B data out12	*List*	-	-	1 = 1
160 DDCS communication					
160.41	Extension adapter com port	*List*	-	-	-
160.51	DDCS controller comm port	*List*	-	-	-
160.52	DDCS controller node address	*Real*	1…254	-	-
160.55	DDCS controller HW connection	*List*	0…1	-	-
160.56	DDCS controller baud rate	*List*	1…8	-	-
160.57	DDCS controller link control	*Real*	1…15	-	-
160.58	DDCS controller comm loss time	*Real*	0…60000	ms	-
160.59	DDCS controller comm loss function	*List*	0…2	-	-
160.64	Mailbox dataset selection	*List*	0…1	-	-
161 DDCS transmit					
161.51	Data set 11 data 1 selection	*List*	-	-	-
161.52	Data set 11 data 2 selection	*List*	-	-	-
161.53	Data set 11 data 3 selection	*List*	-	-	-
161.54	Data set 13 data 1 selection	*List*	-	-	-
161.55	Data set 13 data 2 selection	*List*	-	-	-
161.56	Data set 13 data 3 selection	*List*	-	-	-
161.57	Data set 15 data 1 selection	*List*	-	-	-

No.	Name	Type	Range	Unit	FbEq32
161.58	Data set 15 data 2 selection	*List*	-	-	-
161.59	Data set 15 data 3 selection	*List*	-	-	-
161.60	Data set 17 data 1 selection	*List*	-	-	-
161.61	Data set 17 data 2 selection	*List*	-	-	-
161.62	Data set 17 data 3 selection	*List*	-	-	-
161.63	Data set 19 data 1 selection	*List*	-	-	-
161.64	Data set 19 data 2 selection	*List*	-	-	-
161.65	Data set 19 data 3 selection	*List*	-	-	-
161.66	Data set 21 data 1 selection	*List*	-	-	-
161.67	Data set 21 data 2 selection	*List*	-	-	-
161.68	Data set 21 data 3 selection	*List*	-	-	-
161.69	Data set 23 data 1 selection	*List*	-	-	-
161.70	Data set 23 data 2 selection	*List*	-	-	-
161.71	Data set 23 data 3 selection	*List*	-	-	-
161.72	Data set 25 data 1 selection	*List*	-	-	-
161.73	Data set 25 data 2 selection	*List*	-	-	-
161.74	Data set 25 data 3 selection	*List*	-	-	-
161.101	Data set 11 data 1 value	*Real*	0…65535	-	-
161.102	Data set 11 data 2 value	*Real*	0…65535	-	-
161.103	Data set 11 data 3 value	*Real*	0…65535	-	-
161.104	Data set 13 data 1 value	*Real*	0…65535	-	-
161.105	Data set 13 data 2 value	*Real*	0…65535	-	-
161.106	Data set 13 data 3 value	*Real*	0…65535	-	-
161.107	Data set 15 data 1 value	*Real*	0…65535	-	-
161.108	Data set 15 data 2 value	*Real*	0…65535	-	-
161.109	Data set 15 data 3 value	*Real*	0…65535	-	-
161.110	Data set 17 data 1 value	*Real*	0…65535	-	-
161.111	Data set 17 data 2 value	*Real*	0…65535	-	-
161.112	Data set 17 data 3 value	*Real*	0…65535	-	-
161.113	Data set 19 data 1 value	*Real*	0…65535	-	-
161.114	Data set 19 data 2 value	*Real*	0…65535	-	-
161.115	Data set 19 data 3 value	*Real*	0…65535	-	-
161.116	Data set 21 data 1 value	*Real*	0…65535	-	-
161.117	Data set 21 data 2 value	*Real*	0…65535	-	-
161.118	Data set 21 data 3 value	*Real*	0…65535	-	-

No.	Name	Type	Range	Unit	FbEq32
161.119	Data set 23 data 1 value	*Real*	0…65535	-	-
161.120	Data set 23 data 2 value	*Real*	0…65535	-	-
161.121	Data set 23 data 3 value	*Real*	0…65535	-	-
161.122	Data set 25 data 1 value	*Real*	0…65535	-	-
161.123	Data set 25 data 2 value	*Real*	0…65535	-	-
161.124	Data set 25 data 3 value	*Real*	0…65535	-	-
162 DDCS receive					
162.51	Data set 10 data 1 selection	*List*	-	-	-
162.52	Data set 10 data 2 selection	*List*	-	-	-
162.53	Data set 10 data 3 selection	*List*	-	-	-
162.54	Data set 12 data 1 selection	*List*	-	-	-
162.55	Data set 12 data 2 selection	*List*	-	-	-
162.56	Data set 12 data 3 selection	*List*	-	-	-
162.57	Data set 14 data 1 selection	*List*	-	-	-
162.58	Data set 14 data 2 selection	*List*	-	-	-
162.59	Data set 14 data 3 selection	*List*	-	-	-
162.60	Data set 16 data 1 selection	*List*	-	-	-
162.61	Data set 16 data 2 selection	*List*	-	-	-
162.62	Data set 16 data 3 selection	*List*	-	-	-
162.63	Data set 18 data 1 selection	*List*	-	-	-
162.64	Data set 18 data 2 selection	*List*	-	-	-
162.65	Data set 18 data 3 selection	*List*	-	-	-
162.66	Data set 20 data 1 selection	*List*	-	-	-
162.67	Data set 20 data 2 selection	*List*	-	-	-
162.68	Data set 20 data 3 selection	*List*	-	-	-
162.69	Data set 22 data 1 selection	*List*	-	-	-
162.70	Data set 22 data 2 selection	*List*	-	-	-
162.71	Data set 22 data 3 selection	*List*	-	-	-
162.72	Data set 24 data 1 selection	*List*	-	-	-
162.73	Data set 24 data 2 selection	*List*	-	-	-

No.	Name	Type	Range	Unit	FbEq32
162.74	Data set 24 data 3 selection	*List*	-	-	-
162.101	Data set 10 data 1 value	*Real*	0…65535	-	-
162.102	Data set 10 data 2 value	*Real*	0…65535	-	-
162.103	Data set 10 data 3 value	*Real*	0…65535	-	-
162.104	Data set 12 data 1 value	*Real*	0…65535	-	-
162.105	Data set 12 data 2 value	*Real*	0…65535	-	-
162.106	Data set 12 data 3 value	*Real*	0…65535	-	-
162.107	Data set 14 data 1 value	*Real*	0…65535	-	-
162.108	Data set 14 data 2 value	*Real*	0…65535	-	-
162.109	Data set 14 data 3 value	*Real*	0…65535	-	-
162.110	Data set 16 data 1 value	*Real*	0…65535	-	-
162.111	Data set 16 data 2 value	*Real*	0…65535	-	-
162.112	Data set 16 data 3 value	*Real*	0…65535	-	-
162.113	Data set 18 data 1 value	*Real*	0…65535	-	-
162.114	Data set 18 data 2 value	*Real*	0…65535	-	-
162.115	Data set 18 data 3 value	*Real*	0…65535	-	-
162.116	Data set 20 data 1 value	*Real*	0…65535	-	-
162.117	Data set 20 data 2 value	*Real*	0…65535	-	-
162.118	Data set 20 data 3 value	*Real*	0…65535	-	-
162.119	Data set 22 data 1 value	*Real*	0…65535	-	-
162.120	Data set 22 data 2 value	*Real*	0…65535	-	-
162.121	Data set 22 data 3 value	*Real*	0…65535	-	-
162.122	Data set 24 data 1 value	*Real*	0…65535	-	-
162.123	Data set 24 data 2 value	*Real*	0…65535	-	-
162.124	Data set 24 data 3 value	*Real*	0…65535	-	-
190 Additional actual values					
190.06	Main voltage U1-V1	*Real*	0.00…2000.00	V	100 = 1 V
190.07	Main voltage V1-W1	*Real*	0.00…2000.00	V	100 = 1 V
190.08	Main voltage W1-U1	*Real*	0.00…2000.00	V	100 = 1 V
190.40	Phase current U1	*Real*	0.00…30000.00	A	100 = 1 A
190.41	Phase current V1	*Real*	0.00…30000.00	A	100 = 1 A
190.42	Phase current W1	*Real*	0.00…30000.00	A	100 = 1 A
190.70	DC current 1	*Real*	-30000.00 … 30000.00	A	100 = 1 A
190.71	DC current 1 peak	*Real*	0.00…30000.00	A	100 = 1 A
190.72	DC current 1 fast	*Real*	-30000.00 … 30000.00	A	100 = 1 A
190.73	DC voltage 1 fast	*Real*	0.00…2000.00	V	100 = 1 V
190.74	Main voltage 1 fast	*Real*	0.00…2000.00	V	100 = 1 V
190.75	LSU status word 1	*PB*	0000h…FFFFh	-	1 = 1
190.76	RRU status word 1	*PB*	0000h…FFFFh	-	1 = 1
192 Additional actual values 2					
192.06	Main voltage U2-V2	*Real*	0.00…2000.00	V	100 = 1 V
192.07	Main voltage V2-W2	*Real*	0.00…2000.00	V	100 = 1 V
192.08	Main voltage W2-U2	*Real*	0.00…2000.00	V	100 = 1 V
192.40	Phase current U2	*Real*	0.00…30000.00	A	100 = 1 A
192.41	Phase current V2	*Real*	0.00…30000.00	A	100 = 1 A
192.42	Phase current W2	*Real*	0.00…30000.00	A	100 = 1 A
192.70	DC current 2	*Real*	-30000.00 … 30000.00	A	100 = 1 A
192.71	DC current 2 peak	*Real*	0.00…30000.00	A	100 = 1 A

No.	Name	Type	Range	Unit	FbEq32
192.72	DC current 2 fast	*Real*	-30000.00 … 30000.00	A	100 = 1 A
192.73	DC voltage 2 fast	*Real*	0.00…2000.00	V	100 = 1 V
192.74	Main voltage 2 fast	*Real*	0.00…2000.00	V	100 = 1 V
192.75	LSU status word 2	*PB*	0000h…FFFFh	-	1 = 1
195 HW configuration					
195.01	Supply voltage	*List*	0…6	-	1 = 1
195.04	Control board supply	*List*	0…2	-	1 = 1
195.13	Reduced run mode	*List*	0…65535	-	1 = 1
195.14	Connected modules	*PB*	0000h…FFFFh	-	1 = 1
195.20	HW options word 1	*PB*	0000h…FFFFh	-	1 = 1
195.30	Parallel type list filter	*List*	0…4	-	1 = 1
195.31	Parallel type configuration	*List*	-	-	1 = 1
195.38	DOL fan start delay	*Real*	0…60	s	-
196 System					
196.01	Language	*List*	-	-	1 = 1
196.02	Pass code	*Data*	0…99999999	-	1 = 1
196.03	Access levels active	*PB*	0000h…FFFFh	-	1 = 1
196.06	Parameter restore	*List*	-	-	1 = 1
196.07	Parameter save manually	*List*	0…1	-	1 = 1
196.08	Control board boot	*Real*	0…1	-	1 = 1
196.20	Time sync primary source	*List*	0…9	-	1 = 1
196.24	Full days since 1st Jan 1980	*Real*	1…59999	-	1 = 1
196.25	Time in minutes within 24 h	*Real*	0…1439	-	1 = 1
196.26	Time in ms within one minute	*Real*	0…59999	-	1 = 1
196.29	Time sync source status	*PB*	0000h…FFFFh	-	1 = 1
196.51	Clear fault and event logger	*Real*	0…65535	-	1 = 1
196.61	User data logger status word	*PB*	0000h…FFFFh	-	1 = 1
196.63	User data logger trigger	*Binary src*	-	-	-
196.64	User data logger start	*Binary src*	-	-	-
196.65	Factory data logger time level	*List*	-	-	1 = 1
196.70	Disable adaptive program	*Data*	0…1	-	1 = 1
(Parameters 196.100…196.102 only visible when enabled by parameter 196.02)					
196.100	Change user pass code	*Data*	10000000…99999999	-	1 = 1
196.101	Confirm user pass code	*Data*	10000000…99999999	-	1 = 1
196.102	User lock functionality	*PB*	0000h…FFFFh	-	1 = 1

7

Fault tracing

What this chapter contains

The chapter lists the warning and fault messages including possible causes and corrective actions. The causes of most warnings and faults can be identified and corrected using the information in this chapter. If not, an ABB service representative should be contacted.

Warnings and faults are listed below in separate tables. Each table is sorted by warning/fault code.

Safety

WARNING! Only qualified electricians are allowed to service the regenerative rectifier unit. Read the safety instructions in *Safety instructions for ACS880 multidrive cabinets and modules* (3AUA0000102301 [English]) before working on the regenerative rectifier unit.

Indications

Warnings and faults

Warnings and faults indicate an abnormal status. The codes and names of active warnings/faults are displayed on the control panel as well as the Drive composer PC tool. Only the codes of warnings/faults are available over fieldbus.

Warnings do not need to be reset; they stop showing when the cause of the warning ceases. After the cause of the fault has been corrected, the active fault can be reset from the control panel or Drive composer PC tool. The control panel can be in local or remote (external) control mode. When the fault has been removed, the regenerative rectifier unit can be restarted. Faults can also be reset from an external source selected by parameter *131.11 Fault reset selection*.

Warning and fault indications can be directed to a relay output or a digital input/output by selecting *Warning*, *Fault* or *Fault (-1)* in the source selection parameter. See sections

- *Programmable digital inputs and outputs* (page *25*)
- *Programmable relay outputs* (page *26*), and
- *Programmable I/O extensions* (page *26*).

Editable messages

For some warnings and faults, the message text can be edited and instructions and contact information added. To edit these messages, choose **Menu** - **Settings** - **Edit texts** on the control panel.

Warning/fault history and analysis

Event logs

The regenerative rectifier has two event logs that can be accessed from the main Menu on the control panel. The logs can also be accessed (and reset) using the Drive composer PC tool.

One of the logs contains faults and fault resets. The other log lists warnings and pure events, as well as clearing entries. Both logs contain the 64 most recent events. All indications are stored in the event logs with a time stamp and other information.

Auxiliary codes

Some events generate an auxiliary code that often helps in pinpointing the problem. The auxiliary code is displayed on the control panel together with the message. It is also stored in the event log details. In the Drive composer PC tool, the auxiliary code (if any) is shown in the event listing.

Factory data logger

The regenerative rectifier has a data logger that samples preselected values at 500-microsecond (default; see parameter *196.65 Factory data logger time level*) intervals. By default, approximately 700 samples recorded immediately before and after a fault are saved to the memory unit of the regenerative rectifier. The fault data of the last five faults is accessible in the event log when viewed in the Drive composer pro PC tool. (The fault data is not accessible through the control panel.)

The values that are recorded in the factory data log are *190.74 Main voltage 1 fast*, *190.73 DC voltage 1 fast*, *190.72 DC current 1 fast*, *106.11 Main status word*, *190.75 LSU status*

word 1, *106.01 Main control word* and *110.01 DI status*. The selection of parameters cannot be changed by the user.

Other data loggers

User data logger

A custom data logger can be configured using the Drive composer pro PC tool. This functionality enables the free selection of up to eight parameters to be sampled at selectable intervals. The triggering conditions and the length of the monitoring period can also be defined by the user within the limit of approximately 8000 samples. In addition to the PC tool, the status of the logger is shown by parameter *196.61 User data logger status word*. The triggering sources can be selected by parameters *196.63 User data logger trigger* and *196.64 User data logger start*). The configuration, status and collected data is saved to the memory unit for later analysis.

PSL2 data logger

The BCU control unit contains a data logger that collects data from the regenerative rectifier modules to help fault tracing and analysis. The data is saved onto the SD memory card attached to the BCU, and can be analyzed by ABB service personnel.

Parameters that contain warning/fault information

The codes of active warnings and faults (maximum five each), and five previously occurred warnings and faults are stored in the parameters of groups *104 Warnings and faults* (page *43*).

Warning messages

Code (hex)	Warning	Cause	What to do
AE14	Excess temperature	Regenerative rectifier module heat sink temperature is excessive due to eg. module overload or fan failure. (Control program generates first a warning, then a fault.)	Check module cooling air flow and fan operation. Check ambient temperature. If it exceeds 40 °C (104 °F), ensure that load current does not exceed derated load capacity. See appropriate *Hardware manual*. Check inside of cabinet and heat sink of regenerative rectifier module for dust pick-up. Clean whenever necessary. Check the wiring and status of thermal switches inside the regenerative rectifier module(s). Check the auxiliary code (format XXXY YYZZ). “Y YY” specifies through which BCU control unit channel the fault was received. “ZZ” specifies the location (**1:** U-phase, **2:** V-phase, **3:** W-phase, **4:** INT board, **5:** Brake chopper, **6:** Air inlet (sensor connected to INT board X10), **7:** PCB compartment fan or power supply board, **8:** du/dt filter or temperature switch (XT) (sensor connected to INT board X7), **9:** Sensor connected to INT board X6, **0FA:** Ambient temperature).
AE15	Excess temperature difference	High temperature difference between the semiconductors of different phases.	Check cooling of the module(s). Check the auxiliary code (format XXXY YYZZ). “XXX” indicates the source of difference (**0:** Single module, difference between phase IGBTs, **1:** parallel-connected modules, minimum-maximum difference between all IGBTs of all modules, **2:** parallel-connected modules, minimum-maximum difference between auxiliary power supply boards). With parallel-connected modules, “Y YY” specifies through which BCU control unit channel the highest temperature was measured. “ZZ” specifies the phase (**0:** single module, **1:** U-phase [parallel connection], **2:** V-phase [parallel connection], **3:** W-phase [parallel connection]).

Code (hex)	Warning	Cause	What to do
AE17	PU communication	Communication errors detected between the control unit and the power unit.	Check the connections between the control unit and the power unit. Check the auxiliary code (format XXXY YYZZ). With parallel-connected modules, “Y YY” specifies the affected BCU control unit channel (**0:** broadcast). “ZZ” specifies the error source (**8:** Transmission errors in PSL link [see “XXX”], **9:** Transmitter FIFO warning limit hit). “XXX” specifies the transmission error direction and detailed warning code (**0:** Rx/communication error, **1:** Tx/Reed-Solomon symbol error, **2:** Tx/no synchronization error, **3:** Tx/Reed-Solomon decoder failures, **4:** Tx/Manchester coding errors).
AE19	Measurement circuit temperature	Problem with internal temperature measurement.	Check the auxiliary code (format XXXY YYZZ). “Y YY” specifies through which BCU control unit channel the fault was received. “ZZ” specifies the location (**1:** U-phase IGBT, **2:** V-phase IGBT, **3:** W-phase IGBT, **4:** Power unit INT board, **5:** Brake chopper, **6:** Air inlet, **7:** Power supply board, **8:** du/dt filter, **FAh:** Air in temp).
AE1A	PU board powerfail	Power unit power supply failure.	Contact your local ABB representative.
AE1B	PU communication internal	Communication errors detected between the control unit and the power unit.	Check the connections between the control unit and the power unit.
AE1C	Measurement circuit ADC	Measurement circuit analog-to-digital converter fault.	Contact your local ABB representative.
AE1D	Measurement circuit DFF	Problem with current or voltage measurement of power unit.	Contact your local ABB representative.
AE1E	PU state feedback	State feedback from output phases does not match control signals.	Contact your local ABB representative.
AE21	Flash erase speed exceeded	The flash memory (in the memory unit) has been erased too frequently, compromising the lifetime of the memory.	Avoid forcing unnecessary parameter saves by parameter *196.07* or cyclic parameter writes (such as user logger triggering through parameters). Check the auxiliary code (format XYYY YZZZ). “X” specifies the source of warning (**1:** generic flash erase supervision). “ZZZ” specifies the flash subsector number that generated the warning.
AE24	Voltage category unselected	The supply voltage range has not been defined.	Define supply voltage range (parameter *195.01 Supply voltage*).
AE25	FBA A parameter conflict	The regenerative rectifier does not have a functionality requested by PLC, or requested functionality has not been activated.	Check PLC programming. Check settings of parameter groups *150 FBA* and *151 FBA A settings*.

Code (hex)	Warning	Cause	What to do
AE26	FBA B parameter conflict	The regenerative rectifier does not have a functionality requested by PLC, or requested functionality has not been activated.	Check PLC programming. Check settings of parameter groups *150 FBA* and *154 FBA B settings*.
AE27	AI parametrization	The current/voltage jumper setting of an analog input does not correspond to parameter settings.	Check the auxiliary code. The code identifies the analog input whose settings are in conflict. Adjust either the jumper setting (on the control unit) or parameter *112.15* / *112.25*. **Note:** Control board reboot (either by cycling the power or through parameter *196.08 Control board boot*) is required to validate any changes in the jumper settings.
AE2E	Extension AI parametrization	The hardware current/voltage setting of an analog input (on an I/O extension module) does not correspond to parameter settings.	Check the auxiliary code (format XX00 00YY). “XX” specifies the number of the I/O extension module (**01:** parameter group *114 Extension I/O module 1*, **02:** *115 Extension I/O module 2*, **03:** *116 Extension I/O module 3*). “YY” specifies the analog input on the module. For example, in case of I/O extension module 1, analog input AI1 (auxiliary code 0000 0101), the hardware current/voltage setting on the module is shown by parameter *114.29*. The corresponding parameter setting is *114.30*. Adjust either the hardware setting on the module or the parameter to solve the mismatch. **Note:** Control board reboot (either by cycling the power or through parameter *196.08 Control board boot*) is required to validate any changes in the hardware settings.
AE2F	Extension I/O configuration failure	The I/O extension module types and locations specified by parameters do not match the detected configuration.	Check the event log for an auxiliary code. The code indicates which I/O extension module is affected. Check the type and location settings of the modules (parameters *114.01*, *114.02*, *115.01*, *115.02*, *116.01* and *116.02*). Check that the modules are properly installed.
AE30	FB A communication	Cyclical communication between regenerative rectifier and fieldbus adapter module A or between PLC and fieldbus adapter module A is lost.	Check status of fieldbus communication. See user documentation of fieldbus interface. Check settings of parameter groups *150 FBA*, *151 FBA A settings*, *152 FBA A data in* and *153 FBA A data out*. Check cable connections. Check if communication master is able to communicate.

Code (hex)	Warning	Cause	What to do
AE31	FB B communication	Cyclical communication between regenerative rectifier and fieldbus adapter module B or between PLC and fieldbus adapter module B is lost.	Check status of fieldbus communication. See user documentation of fieldbus interface. Check settings of parameter groups *150 FBA*, *154 FBA B settings*, *155 FBA B data in* and *156 FBA B data out*. Check cable connections. Check if communication master is able to communicate.
AE3E	Panel loss Programmable warning: *149.05 Communication loss action*	Control panel or PC tool selected as active control location has ceased communicating.	Check PC tool or control panel connection. Check control panel connector. Replace control panel in mounting platform.
AE40	Output relay warning	Warning generated by an edge counter. Programmable warnings: *133.35 Edge count 1 warn sel* *133.45 Edge count 2 warn sel*	Check the event log for an auxiliary code. Check the source of the warning corresponding to the code: 2: *133.33 Edge count 1 src* 3: *133.43 Edge count 2 src*.
AE41	Supply unit starts warning		
AE42	Power ups warning		
AE43	Main contactor warning		
AE44	DC charge warning		
AE45	On-time 1 (Editable message text) Programmable warning: *133.14 On-time 1 warn sel*	Warning generated by on-time timer 1.	Check the source of the warning (parameter *133.13 On-time 1 src*).
AE46	On-time 2 (Editable message text) Programmable warning: *133.24 On-time 2 warn sel*	Warning generated by on-time timer 2.	Check the source of the warning (parameter *133.23 On-time 2 src*).
AE47	Edge counter 1 (Editable message text) Programmable warning: *133.35 Edge count 1 warn sel*	Warning generated by edge counter 1.	Check the source of the warning (parameter *133.33 Edge count 1 src*).
AE48	Edge counter 2 (Editable message text) Programmable warning: *133.45 Edge count 2 warn sel*	Warning generated by edge counter 2.	Check the source of the warning (parameter *133.43 Edge count 2 src*).
AE49	Value counter 1 (Editable message text) Programmable warning: *133.55 Value count 1 warn sel*	Warning generated by value counter 1.	Check the source of the warning (parameter *133.53 Value count 1 src*).
AE4A	Value counter 2 (Editable message text) Programmable warning: *133.65 Value count 2 warn sel*	Warning generated by value counter 2.	Check the source of the warning (parameter *133.63 Value count 2 src*).

Code (hex)	Warning	Cause	What to do
AE4B	Device clean warning	Warning generated by an on-time timer. Programmable warnings: *133.14 On-time 1 warn sel* *133.24 On-time 2 warn sel*	Check the event log for an auxiliary code. Check the source of the warning corresponding to the code: 0: *133.13 On-time 1 src* 1: *133.23 On-time 2 src* 10: *105.04 Main fan on-time counter*.
AE4C	DC capacitor warning		
AE4D	Cabinet fan warning		
AE4E	Cooling fan warning		
AE4F	Additional cooling fan warning		
AE51	External warning 1 (Editable message text) Programmable warning: *131.01 External event 1 source* *131.02 External event 1 type*	Fault in external device 1.	Check the external devices. Check setting of parameter *131.01 External event 1 source*.
AE52	External warning 2 (Editable message text) Programmable warning: *131.03 External event 2 source* *131.04 External event 2 type*	Fault in external device 2.	Check the external device. Check setting of parameter *131.03 External event 2 source*.
AE53	External warning 3 (Editable message text) Programmable warning: *131.05 External event 3 source* *131.06 External event 3 type*	Fault in external device 3.	Check the external device. Check setting of parameter *131.05 External event 3 source*.
AE54	External warning 4 (Editable message text) Programmable warning: *131.07 External event 4 source* *131.08 External event 4 type*	Fault in external device 4.	Check the external device. Check setting of parameter *131.07 External event 4 source*.
AE55	External warning 5 (Editable message text) Programmable warning: *131.09 External event 5 source* *131.10 External event 5 type*	Fault in external device 5.	Check the external device. Check setting of parameter *131.09 External event 5 source*.
AE57	Autoreset	A fault is about to be autoreset.	Informative warning. See the settings in parameter group *131 Fault functions*.
AE58	Emergency stop (off2)	Regenerative rectifier has received an emergency stop (mode selection off2) command.	Check that it is safe to continue operation. Reset the source of the emergency stop signal (such as an emergency stop push button). Restart the regenerative rectifier. If the emergency stop was unintentional, check the source of the stop signal (for example, *121.05 Emergency stop source*, or control word received from an external control system).
AE59	Emergency stop (off1 or off3)	Regenerative rectifier has received an emergency stop (mode selection off1 or off3) command.	
AE5A	Enable start signal missing (Editable message text)	No enable start signal received.	Check the setting of (and the source selected by) parameter *120.19 Enable start signal*.

Code (hex)	Warning	Cause	What to do
AE5B	Run enable missing	No run enable signal is received.	Check setting of parameter *120.12 Run enable 1*. Switch signal on or check wiring of selected source.
AE5C	External power signal missing	*195.04 Control board supply* is set to *External 24V* but no voltage is connected to the XPOW connector of the control unit.	Check the external 24 V DC power supply to the control unit, or change the setting of parameter *195.04*.
AE5F	Temperature warning	Regenerative rectifier module temperature is excessive due to eg. module overload or fan failure. (Control program generates first a warning, then a fault.)	Check module cooling air flow and fan operation. Check ambient temperature. If it exceeds 40 °C (104 °F), ensure that load current does not exceed derated load capacity. See appropriate *Hardware manual*. Check inside of cabinet and heat sink of regenerative rectifier module for dust pick-up. Clean whenever necessary. Check the wiring and status of thermal switches inside the cabinet.
AE60	Control board temperature	Control unit temperature is excessive.	Check the auxiliary code. See actions for each code below.
	(none)	Temperature above warning limit	Check ambient conditions. Check air flow and fan operation. Check heatsink fins for dust pick-up.
	1	Thermistor broken	Contact an ABB service representative for control unit replacement.
AE61	Overvoltage	Short-time overvoltage in grid.	Check grid voltage for possible transient cause. Check the auxiliary code to identify the regenerative rectifier unit (**15:** single regenerative rectifier unit or the first parallel-connected regenerative rectifier unit, **16:** the second parallel-connected regenerative rectifier unit).
AE62	Undervoltage	Grid voltage is not sufficient due to missing phase in supply connection, blown fuse or regenerative rectifier bridge internal fault.	Check supply and fuses. Check that parameter *195.01 Supply voltage* is set according to the supply voltage in use. Check the auxiliary code to identify the regenerative rectifier unit (**15:** single regenerative rectifier unit or the first parallel-connected regenerative rectifier unit, **16:** the second parallel-connected regenerative rectifier unit).

Code (hex)	Warning	Cause	What to do
AE67	AI supervision Programmable warning: *112.03 AI supervision function*	An analog signal is outside the limits specified for the analog input.	Check the auxiliary code (format XYY). "X" specifies the location of the input (**0**: AI on control unit; **1**: I/O extension module 1, etc.), "YY" specifies the input and limit (**01:** AI1 under minimum, **02:** AI1 over maximum, **03:** AI2 under minimum, **04:** AI2 over maximum). Check signal level at the analog input. Check the wiring connected to the input. Check the minimum and maximum limits of the input in parameter group *112 Standard AI*, *114 Extension I/O module 1*, *115 Extension I/O module 2* or *116 Extension I/O module 3*.
AE68	Emergency stop warning	Emergency stop warning is activated.	Check that it is safe to continue operation.
AE69	Synchronization	Synchronization to supply network has failed.	Check possible network asymmetry. Check the auxiliary code to identify the regenerative rectifier unit (**15:** single regenerative rectifier unit or the first parallel-connected regenerative rectifier unit, **16:** the second parallel-connected regenerative rectifier unit).
AE6B	Input phase lost	Missing phase in supply connection, blown fuse or regenerative rectifier bridge internal fault.	Check supply and fuses.
AE6C	Semiconductor temperature	IGBT or diode temperature is excessive due to eg. module overload or fan failure. (Control program generates first a warning, then a fault.)	Check ambient conditions. Check air flow and fan operation. Check heat sink fins for dust pick-up. Check motor power against regenerative rectifier power. Check the auxiliary code to identify the regenerative rectifier unit (**15:** single regenerative rectifier unit or the first parallel-connected regenerative rectifier unit, **16:** the second parallel-connected regenerative rectifier unit).
AE6D	DDCS controller comm loss	DDCS (fiber optic) communication between the regenerative rectifier and external controller is lost.	Check status of controller. See the user documentation of the controller. Check settings of parameter group *160 DDCS communication*. Check cable connections. If necessary, replace cables.
AE6E	Internal SW error	Internal SW error	Contact your local ABB representative. Quote the auxiliary code (check the event details in the event log).

Code (hex)	Warning	Cause	What to do
AE73	Fan	Cooling fan stuck or disconnected.	Check the setting of parameter *195.20 HW options word 1*, bit 13. Check the auxiliary code to identify the fan. Code **0** denotes main fan 1. Other codes (format XYZ): “X” specifies state code (**1**: ID run, **2**: normal). “Y” specifies the index of the converter module connected to BCU (**0…n** or **0…C**). “Z” specifies the index of the fan (**1**: Main fan 1, **2**: Main fan 2, **3**: Main fan 3, **4**: Auxiliary fan 1, **5**: Auxiliary fan 2, **6**: Auxiliary fan 3, **7**: Filter fan 1, **8**: Filter fan 2, **9**: Filter fan 3). Note that modules are coded starting from 0. For example, the code 101 means that Main fan 1 of module 1 (connected to BCU channel V1T/V1R) has faulted during its ID run. Check fan operation and connection. Replace fan if faulty.
AE74	Current diff 12 pulse	The DC busbar currents of 12-pulse unit differ too much (27% of nominal by default).	Check the DC fuses of the modules. Check that there are no loose connections in DC busbar. Check that the inductances of the windings are equal. Contact your local ABB representative if the limit needs to be changed.
AE75	SD card	Error related to SD card used to store data.	Check the auxiliary code. See actions for each code below.
	1	No SD card	Insert a compatible, writable SD card into the SD CARD slot of the BCU control unit.
	2	SD card write-protected	
	3	SD card unreadable	
AE79	Power fail saving	Power fail saving is requested too frequently. Due to the limited saving interval some of the requests do not trigger the saving and power fail data may be lost. This may be caused by DC voltage oscillation.	Check the supply voltage.
AE85	Charging count	There are too many DC link charging attempts.	Two attempts in five minutes is allowed to prevent charging circuit overheating.
AE87	Ext earth leakage	External earth fault trigged by input selected with parameter *131.28 Ext earth leakage signal source*.	Check external earth fault source. Usually only one device is allowed in the same network. Check AC fuses. Check for earth leakages. Check supply cabling. Check power modules. Check there are no power factor correction capacitors or surge absorbers in supply cable. If no earth fault can be detected, contact your local ABB representative.

Code (hex)	Warning	Cause	What to do
AE88	Parameter map configuration	Too much data in parameter mapping table created in Drive customizer.	See the *Drive customizer PC tool user's manual* (3AUA0000104167 [English]).
AE89	Mapped parameter value cut	Parameter value saturated eg. by the scaling specified in parameter mapping table (created in Drive customizer).	Check parameter scaling and format in parameter mapping table. See the *Drive customizer PC tool user's manual* (3AUA0000104167 [English]).
AE8A	User lock is open	The user lock is open, ie. user lock configuration parameters *196.100*…*196.102* are visible.	Close the user lock by entering an invalid pass code in parameter *196.02 Pass code*. See section *User lock* (page *37*).
AE8B	User pass code not confirmed	A new user pass code has been entered in parameter *196.100* but not confirmed in *196.101*.	Confirm the new pass code by entering the same code in *196.101*. To cancel, close the user lock without confirming the new code. See section *User lock* (page *37*).
AE8C	Control unit battery	The battery of the control unit is low.	Replace control unit battery. This warning can be suppressed by using parameter *131.40*.
AEA0	Phase order	Regenerative rectifier unit has detected that phase order differs from expected (BCU control unit only).	Make sure that all direct-on-line fans in filters and power units are rotating in correct direction. This warning can be suppressed by using parameter *131.40*.
BE02	MCB maintenance notice	Main circuit breaker has worked 70000 times and it should be maintained according to the maintenance plan.	Maintain the main circuit breaker.

Fault messages

Code (hex)	Fault	Cause	What to do
2E00	Overcurrent	Too high inverter load or short circuit.	Check supply voltage. Check that there are no power factor correction capacitors or surge absorbers in supply cable. Check motor load and acceleration times. Check power semiconductors (IGBTs) and current transducers. Check the auxiliary code (format XXXY YYZZ). With parallel-connected modules, “Y YY” specifies through which BCU control unit channel the fault was received. “ZZ” indicates the phase that triggered the fault (**0**: No detailed information available, **1**: U-phase, **2**: V-phase, **4**: W-phase, **3**/**5**/**6**/**7**: multiple phases).
2E03	Calibration	Measured offset of output phase current measurement is too great.	Reset the fault and restart the converter. If the fault persists, contact your local ABB representative.
2E05	BU current difference	Phase current difference between parallel-connected modules.	Check converter fuses. Check converter(s). Check inverter(s). Check L-filter(s). Power off all boards. If the fault persists, contact your local ABB representative. Check the auxiliary code (format XXXY YYZZ). “XXX” specifies the source of the first error (see “YYY”). “YYY” specifies the module through which BCU control unit channel the fault was received (**1:** Channel 1, **2:** Channel 2, **4:** Channel 3, **8:** Channel 4, …, **800:** Channel 12).
2E08	Ext earth leakage	External earth fault trigged by input selected with parameter *131.28 Ext earth leakage signal source*.	See *AE87 Ext earth leakage* (page *171*).
2E09	DC short circuit	There is a short-circuit in DC busbar.	Check DC busbar. Check the auxiliary code to identify the regenerative rectifier unit (**15:** single regenerative rectifier unit or the first parallel-connected regenerative rectifier unit, **16:** the second parallel-connected regenerative rectifier unit).
2E0B	Current diff 12 pulse	The DC busbar currents of 12-pulse unit differ too much (27% of nominal by default).	See *AE74 Current diff 12 pulse* (page *171*).
3E00	Input phase loss	Input phase loss detected by the IGBT bridge.	Check the AC fuses. Check for input power supply imbalance.
3E02	Charge relay lost	No acknowledgement received from charge relay.	Contact your local ABB representative.

Code (hex)	Fault	Cause	What to do
3E05	DC link undervoltage	Intermediate circuit DC voltage is not sufficient due to missing supply phase, blown fuse or regenerative rectifier bridge internal fault.	Check the supply and fuses. Check that parameter *195.01 Supply voltage* is set according to the supply voltage in use.
3E06	BU DC link difference	Difference in DC voltages between parallel-connected regenerative rectifier modules.	Check the DC fuses. Check the connection to the DC bus. If the problem persists, contact your local ABB representative. Check the auxiliary code (format XXXY YYZZ). “XXX” specifies the source of the first error (see “YYY”). “YYY” specifies the module through which BCU control unit channel the fault was received (**1:** Channel 1, **2:** Channel 2, **4:** Channel 3, **8:** Channel 4, …, **800:** Channel 12).
3E07	BU voltage difference	Difference in main voltages between parallel-connected regenerative rectifier modules.	Check cable connections. Check the supply and fuses.
3E08	LSU charging	DC link voltage is not high enough after charging.	Check the supply and fuses. Check the event log for an auxiliary code. The auxiliary code identifies the event (see below). Check external charging tuning parameters *120.22*…*120.50*. Check the connection from the relay output to the charging contactor. Check that the DC voltage measuring circuit is working correctly.
	1	Voltage rise is not acceptable.	Check parameter *120.26 Maximum dU/dt*.
	2	DC voltage level is not acceptable.	Check supply connection. Check parameter *195.01 Supply voltage* and parameter *120.25 MCB closing level*.
	3	Charging current is too high.	Check parameter *120.22 Max current for MCB closing*.
	4	Charging time is too high.	Check supply connections, voltage of power supply network and PSL2 link cable.
	5	After closing the charging contactor, the voltage did not rise above 10% from nominal voltage in 0.2 seconds (can be set in service level), and current was below the level set by parameter *120.22 Max current for MCB closing*.	Check the supply connection, and power unit must be externally powered to measure voltage.
	8	Parameter *120.28 MCB relay timing* is set too high. The DC voltage drops too low.	Check parameter *120.28 MCB relay timing*.
3E09	Charging count	There are too many DC link charging attempts.	Two attempts in five minutes is allowed to prevent charging circuit overheating.

Code (hex)	Fault	Cause	What to do
3E0A	LSU charging busbar fault	The DC voltage rise in 10 ms is not acceptable during charging. The level is below the value set in parameter *120.26 Maximum dU/dt*, but DC voltage has not reached the level set in parameter *120.25 MCB closing level*.	Check the connections of the DC capacitors in the power modules and the parameters *120.25 MCB closing level* and parameter *120.26 Maximum dU/dt*.
3E0D	DC link overvoltage	Excessive intermediate circuit DC voltage	Check that parameter *195.01 Supply voltage* is set according to the supply voltage in use. Check the auxiliary code to identify the regenerative rectifier unit (**15:** single regenerative rectifier unit or the first parallel-connected regenerative rectifier unit, **16:** the second parallel-connected regenerative rectifier unit).
3E0F	Synchronization	Synchronization to supply network has failed.	Check possible network asymmetry. Check the auxiliary code to identify the regenerative rectifier unit (**15:** single regenerative rectifier unit or the first parallel-connected regenerative rectifier unit, **16:** the second parallel-connected regenerative rectifier unit). If the fault persists, contact your local ABB representative.
4E03	Excess temperature	Regenerative rectifier module heat sink temperature is excessive due to eg. module overload, fan failure or heat sink sensor. (Control program generates first a warning, then a fault.)	See *AE14 Excess temperature* (page *164*).
4E04	Excess temperature difference	High temperature difference between the semiconductors of different phases. The amount of available temperatures depends on the frame size.	See *AE15 Excess temperature difference* (page *164*).
4E06	Cabinet temperature fault	A measurement device connected to regenerative rectifier digital input or DI1 has tripped to a fault. Input is selected with parameter *131.33 Cabinet temperature fault source*. Excessive temperature of the busbars/fuses due to cabinet fan failure. Excessive temperature of the chokes inside the regenerative rectifier module due to a phase loss. Excessive temperature of the heat sink of the regenerative rectifier module due to module fan failure. (Control program generates first a warning, then a fault.)	Check parameter *131.34 Cabinet temperature supervision*. Check cabinet temperature source. Replace the cabinet fan. Check the input fuses and the input connection. Replace the module fan.

Code (hex)	Fault	Cause	What to do
4E07	Control board temperature	High control board tempera-ture.	Check proper cooling of the cabinet.
4E08	Semiconductor temperature	Semiconductor temperature is excessive.	Check ambient conditions. Check air flow and fan operation. Check heat sink fins for dust pick-up. Check motor power against regenerative rectifier unit power. Check the auxiliary code to identify the regenerative rectifier unit (**15:** single regenerative rectifier unit or the first parallel-connected regenerative rectifier unit, **16:** the second parallel-connected regenerative rectifier unit).
5E00	Fan	Cooling fan stuck or disconnected.	See *AE73 Fan* (page *171*).
5E03	XSTO circuit open	Circuit connected to XSTO:IN1 and/or XSTO:IN2 is open.	Check XSTO circuit connections. See sections *Default I/O connection diagram (BCU)* on page *33*, and *Default I/O connection diagram (BCU)* on page *33*. The auxiliary code contains location information. When converted into a 32-bit binary number, the bits of the code indicate the following: **31…28:** Number of faulty module (0…11 decimal), **1111:** STO_ACT states of the control unit and the modules in conflict, **27:** STO_ACT state of modules, **26:** STO_ACT state of the control unit, **25:** STO1 of the control unit, **24:** STO2 of the control unit, **23…12:** STO1 of modules 12…1 (bits of non-existing modules set to 1), **11…0:** STO2 of modules 12…1 (bits of non-existing modules set to 1). For more information, see appropriate hardware manual.
5E04	PU logic error	The memory of the power unit logic is cleared.	Contact your local ABB representative.

Code (hex)	Fault	Cause	What to do
5E05	Rating ID mismatch	The hardware of the regenerative rectifier does not match the information stored in the memory unit. This may occur eg. after a firmware update or memory unit replacement.	Cycle the power to the regenerative rectifier unit. If the control unit is externally powered, reboot the control unit (using parameter *196.08 Control board boot*) or by cycling its power. Check the auxiliary code. The auxiliary codes are as follows: 1 = Ratings of the power unit and the BCU control unit are not the same. Rating ID has changed. 2 = Parallel connection rating ID has changed. 3 = Power unit types are not the same in all power units. 4 = Parallel connection rating ID is active in a single power unit setup. 5 = It is not possible to implement the selected rating with the current power units. 6 = Power unit rating ID is 0. 7 = Reading power unit rating ID or power unit type failed on connection. With parallel connection faults, the format of the auxiliary code is 0X0Y. “Y” indicates the auxiliary code, “X” indicates the first faulty power unit channel in hexadecimal (1…A). If the problem persists, contact your local ABB representative.
5E06	Main contactor fault	Control program does not receive main contactor on (1) acknowledgement through digital input even control program has closed the contactor control circuit with relay output. Main contactor / main breaker is not functioning properly, or there is a loose / bad connection.	Check main contactor / main breaker control circuit wiring. Check the status of other switches connected to contactor control circuit. See the delivery-specific circuit diagrams. Check main contactor operating voltage level (should be 230 V). Check digital input DI3 connections.

Code (hex)	Fault	Cause	What to do
5E07	PU communication	The way the control unit is powered does not correspond to parameter setting.	Check setting of *195.04 Control board supply*.
		Communication errors detected between the control unit and the power unit.	Check the connection between the control unit and the power unit. Check the auxiliary code (format XXXY YYZZ). With parallel-connected modules, “Y YY” specifies the affected BCU control unit channel (**0**: broadcast). “ZZ” specifies the error source (**1**: Transmitter side [link error], **2**: Transmitter side [no communication], **3**: Receiver side [link error], **4**: Receiver side [no communication], **5**: Transmitter FIFO error [see “XXX”], **6**: Module [xINT board] not found, **7**: BAMU board not found). “XXX” specifies the transmitter FIFO error code (**1**: Internal error [invalid call parameter], **2**: Internal error [configuration not supported], **3**: Transmission buffer full).
5E08	Power unit lost	Connection between the control unit and the power unit is lost.	Check the connection between the control unit and the power unit.
5E09	PU communication internal	Internal communication error.	Contact your local ABB representative.
5E0A	Measurement circuit ADC	Measurement circuit analog-to-digital converter fault.	Contact your local ABB representative quoting the auxiliary code.
5E0B	PU board powerfail	Power unit power supply failure.	Check the auxiliary code (format ZZZY YYXX). “YY Y” specifies the affected module (**0…C**). “XX” specifies the affected power supply (**1:** Power supply 1, **2:** Power supply 2, **3:** both supplies).
5E0C	Measurement circuit DFF	Measurement circuit fault.	Contact your local ABB representative, quoting the auxiliary code.
5E0D	PU communication configuration	Version check cannot find a matching power unit FPGA logic, or number of connected power modules differs from specified.	If the number of connected power modules is correct (parameter *195.31 Parallel type configuration*), update the FPGA logic of the power unit. Contact your local ABB representative.
5E0E	Reduced run	Number of regenerative rectifier modules detected does not match the value of parameter *195.13 Reduced run mode*, or the value of parameter *195.13 Reduced run mode* indicates a configuration that is not possible. See section *Reduced run function* (page *35*).	Check that the value of *195.13 Reduced run mode* corresponds to the number of regenerative rectifier modules present. Check that the modules present are powered from the DC bus and connected by fiber optic cables to the BCU control unit. If all modules of the supply unit are in fact available (eg. maintenance work has been completed), check that parameter *195.13* is set to 0 (reduced run function disabled).
5E0F	PU state feedback	State feedback from output phases does not match control signals.	Contact your local ABB representative quoting the auxiliary code.

Code (hex)	Fault	Cause	What to do
5E10	Charging feedback	Charging feedback signal missing.	Check the feedback signal coming from the charging system.
5E11	Unknown PU fault	Unidentified power unit logic fault.	Check the logic and firmware compatibility. Contact your local ABB representative.
5E13	Auxiliary circuit breaker fault	Circuit breaker fault trigged by input selected with parameter *131.32 Aux circuit breaker fault source*.	By default the feedback is connected to DI4.
5E14	Measurement circuit temperature	Problem with internal temperature measurement of the regenerative rectifier.	See *AE19 Measurement circuit temperature* (page *165*).
5E17	Running fault of 12 pulse	The modules connected to other winding of 12-pulse transformer are not started or running.	Check that the other breaker is closed properly. Check the fuses.
5E19	CU logic error	FPGA of the control unit has lost its configuration. This fault cannot be reset. This fault automatically reboots the control unit after a short delay.	Replace the control unit.
5E1A	Fuse trip	Fuse trip signal received.	Check the source of the fault (parameter *131.38 Fuse trip fault source*).
5E1B	Brake chopper	Brake chopper fault signal received.	Check the source of the fault (parameter *131.39 Brake chopper fault source*).
6E00	FPGA version incompatible	Firmware and FPGA file version in the power unit are incompatible.	Reboot the control unit (using parameter *196.08 Control board boot*) or by cycling power. If the problem persists, contact your local ABB representative.
		Update of power unit logic failed.	Retry.
6E01	FBA A mapping file	Fieldbus adapter A mapping file read error.	Contact your local ABB representative.
6E02	FBA B mapping file	Fieldbus adapter B mapping file read error.	Contact your local ABB representative.
6E03	Task overload	Internal fault. **Note:** This fault cannot be reset.	Reboot the control unit (using parameter *196.08 Control board boot*) or by cycling power. If the problem persists, contact your local ABB representative.
6E04	Stack overflow	Internal fault. **Note:** This fault cannot be reset.	Reboot the control unit (using parameter *196.08 Control board boot*) or by cycling power. If the problem persists, contact your local ABB representative.
6E05	Internal file load	File read error. **Note:** This fault cannot be reset.	Reboot the control unit (using parameter *196.08 Control board boot*) or by cycling power. If the problem persists, contact your local ABB representative.
6E06	Internal record load	Internal record load error.	Contact your local ABB representative.

Code (hex)	Fault	Cause	What to do
6E08	Memory unit detached	The memory unit was detached when the control unit was powered.	Switch off the power to the control unit and reinstall the memory unit. In case the memory unit was not actually removed when the fault occurred, check that the memory unit is properly inserted into its connector and its mounting screw is tight. Reboot the control unit (using parameter *196.08 Control board boot*) or by cycling power. If the problem persists, contact your local ABB representative.
6E09	Internal SSW fault	Internal fault.	Reboot the control unit (using parameter *196.08 Control board boot*) or by cycling power. If the problem persists, contact your local ABB representative.
6E0A	User set fault	Loading of the user parameter set failed because • requested set does not exist • set is not compatible with the control program • the regenerative rectifier was switched off during loading.	Ensure that a valid user parameter set exists. Reload.
6E0B	Kernel overload	Operating system error. **Note:** This fault cannot be reset.	Reboot the control unit (using parameter *196.08 Control board boot*) or by cycling power. If the problem persists, contact your local ABB representative.
6E0C	Parameter system	Parameter load or save failed.	Try forcing a save using parameter *196.07 Parameter save manually*. Retry.
6E0D	FBA A parameter conflict	The regenerative rectifier does not have a functionality requested by PLC, or requested functionality has not been activated.	Check PLC programming. Check settings of parameter groups *150 FBA* and *151 FBA A settings*.
6E0E	FBA B parameter conflict	The regenerative rectifier does not have a functionality requested by PLC, or requested functionality has not been activated.	Check PLC programming. Check settings of parameter groups *150 FBA* and *154 FBA B settings*.
6E15	Text data overflow	Internal fault.	Reset the fault. Contact your local ABB representative if the fault persists.
6E16	Text 32-bit table overflow	Internal fault.	Reset the fault. Contact your local ABB representative if the fault persists.
6E17	Text 64-bit table overflow	Internal fault.	Reset the fault. Contact your local ABB representative if the fault persists.
6E18	Text file overflow	Internal fault.	Reset the fault. Contact your local ABB representative if the fault persists.
6E1A	Rating ID fault	Rating ID load error.	Contact your local ABB representative.
6E1B	Backup/Restore Timeout	A control panel or PC tool fails to communicate with the drive during backup or restoring operation.	Check the control panel or PC tool communication, and if it is still in backup/restore state.
6E1C	Emergency stop fault	Drive has received an emergency stop command.	Check that it is safe to continue operation. Return the emergency stop pushbutton to normal position. Restart the drive.

Code (hex)	Fault	Cause	What to do
6E1D	Internal SW error	Internal error.	Contact your local ABB representative. Quote the auxiliary code (check the event details in the event log).
6E1F	Licensing fault	There are two types of licenses being used in ACS880 drives: licenses that need to be found from the unit which allow the firmware to be executed, and licenses that prevent the firmware from running. The license is indicated by the value of the auxiliary code field. The license is Nxxxx, where xxxx is indicated by the 4-digit value of the auxiliary code field.	Record the auxiliary codes of all active licensing faults and contact your product vendor for further instructions. This fault requires a reboot of the control unit either by switching the power off and on, or using parameter *196.08 Control board boot*.
	8207	The regenerative rectifier module (frame R8i) has a hardware license (+N8207) which allows the use of the module with the ACS880 regenerative rectifier control program only. (It is though possible to use a frame R8i module without the hardware license (+N8207) with the regenerative rectifier software. Therefore it is possible to use an R8i module without the hardware license (+N8207) as a spare part module for ACS880-90x.)	Contact your product vendor for further instructions.
6E20	Fault reset	Fault reset has been requested and done.	Informative fault.
6E21	RRU software	Error in the regenerative rectifier control software.	Contact your local ABB representative. Quote the auxiliary code (check the event details in the event log).
6E27	Adaptive program	Error running the adaptive program.	Check the auxiliary code (format XXXX YYYY). “XXXX” specifies the number of the function block (**0000** = generic error). “YYYY” indicates the problem (see actions for each code below).
	000A	Program corrupted or block non-existent	Restore the template program or download the program to the regenerative rectifier unit.
	000C	Required block input missing	Check the inputs of the block.
	000E	Program corrupted or block non-existent	Restore the template program or download the program to the regenerative rectifier unit.
	0011	Program too large.	Remove blocks until the error stops.
	0012	Program is empty.	Correct the program and download it to the regenerative rectifier unit.
	001C	A non-existing parameter or block is used in the program.	Edit the program to correct the parameter reference, or to use an existing block.
	001D	Parameter type invalid for selected pin.	Edit the program to correct the parameter reference.

Code (hex)	Fault	Cause	What to do
	001E	Output to parameter failed because the parameter was write-protected.	Check the parameter reference in the program. Check for other sources affecting the target parameter.
	0023	Program file incompatible with current firmware version.	Adapt the program to current block library and firmware version.
	0024		
	002A	Too many blocks.	Edit the program to reduce the number of blocks.
	Other	–	Contact your local ABB representative, quoting the auxiliary code.
7E00	Option module comm loss	Communication between the regenerative rectifier and option module is lost.	Check that the option modules are properly seated in their slots. Check that the option modules or slot connectors are not damaged. To pinpoint the problem, try installing the modules into different slots.
7E01	Panel loss	Control panel or PC tool selected as active control location has ceased communicating.	Check PC tool or control panel connection. Check control panel connector. Replace control panel in mounting platform.
7E0B	FBA A communication Programmable fault: *150.02 FBA A comm loss func*	Cyclical communication between regenerative rectifier and fieldbus adapter module A or between PLC and fieldbus adapter module A is lost.	Check status of fieldbus communication. See user documentation of fieldbus interface. Check settings of parameter groups *150 FBA*, *151 FBA A settings*, *152 FBA A data in* and *153 FBA A data out*. Check cable connections. Check if communication master is able to communicate.
7E0C	FBA B communication Programmable fault: *150.32 FBA B comm loss func*	Cyclical communication between regenerative rectifier and fieldbus adapter module B or between PLC and fieldbus adapter module B is lost.	Check status of fieldbus communication. See user documentation of fieldbus interface. Check settings of parameter groups *150 FBA*, *154 FBA B settings*, *155 FBA B data in* and *156 FBA B data out*. Check cable connections. Check if communication master is able to communicate.
7E10	Ext I/O comm loss	The I/O extension module types specified by parameters do not match the detected configuration.	Check the event log for an auxiliary code (format XXYY YYYY). “XX” specifies the number of the I/O extension module (01: parameter group *114 Extension I/O module 1*, 02: *115 Extension I/O module 2*, 03: *116 Extension I/O module 3*). “YY YYYY” indicates the problem (see actions for each code below).
	00 0001	Communication with module failed.	Check that the module is properly seated in its slot. Check that the module and the slot connector is not damaged. Try installing the module into another slot.

Code (hex)	Fault	Cause	What to do
	00 0002	Module not found.	Check the type and location settings of the modules (parameters *114.01*/*114.02*, *115.01*/*115.02* or *116.01*/*116.02*). Check that the module is properly seated in its slot. Check that the module and the slot connector is not damaged. Try installing the module into another slot.
	00 0003	Configuration of module failed.	
	00 0004	Configuration of module failed.	
7E11	DDCS controller comm loss	DDCS (fiber optic) communication between the regenerative rectifier and external controller is lost.	Check status of controller. See the user documentation of the controller. Check settings of parameter group *160 DDCS communication*. Check cable connections. If necessary, replace cables.
7E13	Incompatible option module	Option module not supported. (For example, type Fxxx-xx-M fieldbus adapter modules are not supported.)	Check the auxiliary code. The code specifies the interface to which the unsupported module is connected: **1:** Fieldbus interface A, **2:** Fieldbus interface B. Replace the module with a supported type.
8E00	Overvoltage	Grid voltage is above 120% of the parameter *195.01 Supply voltage* for more than 0.5 seconds.	Check that parameter *195.01 Supply voltage* is set according to the supply voltage in use. Check the auxiliary code to identify the regenerative rectifier unit (**15:** single regenerative rectifier unit or the first parallel-connected regenerative rectifier unit, **16:** the second parallel-connected regenerative rectifier unit).
8E06	AI supervision	An analog signal is outside the limits specified for the analog input.	Check the event log for an auxiliary code (format XXXX XYZZ). “Y” specifies the location of the input (**0:** Control unit, **1:** I/O extension module 1, **2:** I/O extension module 2, **3:** I/O extension module 3). “ZZ” specifies the limit (**01:** AI1 under minimum, **02:** AI1 above maximum, **03:** AI2 under minimum, **04:** AI2 above maximum). Check signal level at the analog input. Check the wiring connected to the input. Check the minimum and maximum limits of the input in parameter group *112 Standard AI*.
9E01	External fault 1 (Editable message text) Programmable fault: *131.01 External event 1 source* *131.02 External event 1 type*	Fault in external device 1.	Check external devices for faults. Check setting of parameter *131.01 External event 1 source*.

Code (hex)	Fault	Cause	What to do
9E02	External fault 2 (Editable message text) Programmable fault: *131.03 External event 2 source* *131.04 External event 2 type*	Fault in external device 2.	Check the external device. Check setting of parameter *131.03 External event 2 source*.
9E03	External fault 3 (Editable message text) Programmable fault: *131.05 External event 3 source* *131.06 External event 3 type*	Fault in external device 3.	Check the external device. Check setting of parameter *131.05 External event 3 source*.
9E04	External fault 4 (Editable message text) Programmable fault: *131.07 External event 4 source* *131.08 External event 4 type*	Fault in external device 4.	Check the external device. Check setting of parameter *131.07 External event 4 source*.
9E05	External fault 5 (Editable message text) Programmable fault: *131.09 External event 5 source* *131.10 External event 5 type*	Fault in external device 5.	Check the external device. Check setting of parameter *131.09 External event 5 source*.
FE00	FB A force trip	A fault trip command has been received through fieldbus adapter A.	Check the fault information provided by the PLC.
FE01	FB B force trip	A fault trip command has been received through fieldbus adapter B.	Check the fault information provided by the PLC.
FE03	Safe torque off 1 loss	Some STO connectors are not connected. **Note:** In regenerative rectifiers the STO connectors do not constitute a true safety function.	Check the auxiliary code. The code contains location information, especially with parallel-connected modules. When converted into a 32-bit binary number, the bits of the code indicate the following: 31…28: Number of faulty module (0…11 decimal). 1111: STO_ACT states of control unit and modules in conflict 27: STO_ACT state of modules 26: STO_ACT state of control unit 25: STO1 of control unit 24: STO2 of control unit 23…12: STO1 of modules 12…1 (Bits of non-existing modules set to 1) 11…0: STO2 of modules 12…1 (Bits of non-existing modules set to 1)
FE04	Safe torque off 2 loss	Some STO connectors are not connected. **Note:** In regenerative rectifiers the STO connectors do not constitute a true safety function.	

8

Fieldbus control through a fieldbus adapter

What this chapter contains

This chapter describes how the regenerative rectifier can be controlled by external devices over a communication network (fieldbus) through an optional fieldbus adapter module.

System overview

The user can control the regenerative rectifier unit through a fieldbus interface if the unit is equipped with an optional fieldbus adapter (for example, option +K454). Then the regenerative rectifier unit can be connected to an external control system through a serial communication link. The fieldbus adapter can be installed into any free slot on the control unit.

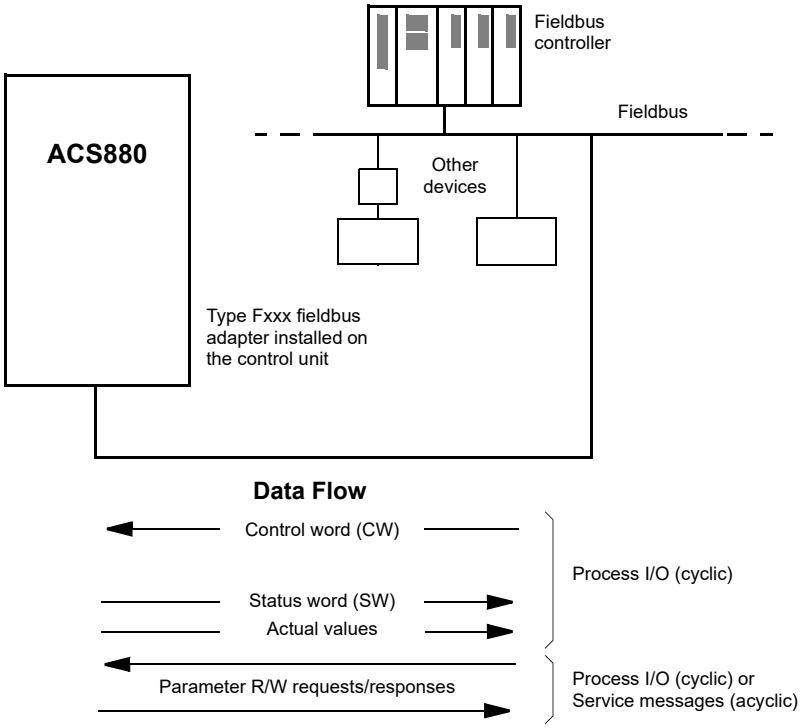

The regenerative rectifier unit can be set to receive its control information through the fieldbus interface, or the control can be distributed between the fieldbus interface and other available sources such as digital and analog inputs.

Fieldbus adapters are available for various serial communication systems and protocols, for example

- CANopen (FCAN-01 adapter)
- ControlNet (FCNA-01 adapter)
- DeviceNet (FDNA-01 adapter)
- EtherCAT (FECA-01 adapter)
- EtherNet/IP (FENA-11, FENA-21 or FEIP-21 adapter)
- Modbus/RTU (FSCA-01 adapter)
- Modbus TCP (FENA-11, FENA-21 or FMBT-21 adapter)
- POWERLINK (FEPL-02 adapter)
- PROFIBUS DP (FPBA-01 adapter)
- PROFINET IO (FENA-11, FENA-21 or FPNO-21 adapter).

Note: The text and examples in this chapter describe the configuration of one fieldbus adapter (FBA A) by parameters *150.01*…*150.21* and parameter groups 151…153. The second adapter (FBA B), if present, is configured in a similar fashion by parameters *150.31*…*150.51* and parameter groups 154…156.

Note: If FENA-xx Ethernet adapter is used for Ethernet tool network and Drive composer PC tool, use the FENA-xx adapter as fieldbus adapter B. Configure the FENA-xx adapter through parameters *150.31*…*150.51* and parameter groups 154…156. Normally, use the fieldbus adapter module as fieldbus adapter A. See *Ethernet tool network for ACS880 drives application guide* (3AUA0000125635 [English]), and *FENA-01/-11 Ethernet adapter module user's manual* (3AUA0000093568 [English]).

Basics of the fieldbus control interface

The cyclic communication between a fieldbus system and the regenerative rectifier unit consists of 16/32-bit input and output data words. The regenerative rectifier unit supports at the maximum the use of 12 data words (16 bits) in each direction.

Data transmitted from the regenerative rectifier unit to the fieldbus controller is defined by parameters *152.01 FBA A data in1* … *152.12 FBA A data in12*. The data transmitted from the fieldbus controller to the regenerative rectifier unit is defined by parameters *153.01 FBA data out1* … *153.12 FBA data out12*.

Control word and Status word

The Control word is the principal means for controlling the regenerative rectifier unit from a fieldbus system. It is sent by the fieldbus master station to the regenerative rectifier unit through the adapter module. The regenerative rectifier unit switches between its states according to the bit-coded instructions on the Control word, and returns status information to the master in the Status word.

The contents of the Control word and the Status word are detailed on pages *188* and *189* respectively.

If parameter *150.12 FBA A debug mode* is set to *Fast*, the Control word received from the fieldbus is shown by parameter *150.13 FBA A control word*, and the Status word transmitted to the fieldbus network by *150.16 FBA A status word*.

Actual values

Actual values are 16-bit words containing information on the operation of the regenerative rectifier unit.

If parameter *150.12 FBA A debug mode* is set to *Fast*, the actual values sent to the fieldbus are displayed by *150.17 FBA A actual value 1* and *150.18 FBA A actual value 2*.

Contents of the fieldbus Control word

Bit	Name	Value	Description
0	ON/OFF	1	Start charging.
		0	Open main contactor (switch power off).
1	Off2 control	1	Continue operation (OFF2 inactive)
		0	Emergency stop, open main contactor
2	Off3 control	1	Continue operation (OFF3 inactive)
		0	Emergency stop, open main contactor
3	Start	1	Start modulating.
		0	Stop modulating.
4	-	1	Not in use.
		0	Not in use.
5	-	1	Not in use.
		0	Not in use.
6	-	1	Not in use.
		0	Not in use.
7	Reset	0=>1	Fault reset if an active fault exists.
		0	- (no reset)
8	-	1	Not in use.
		0	Not in use.
9	-	1	Not in use.
		0	Not in use.
10	Remote cmd	1	Control location: REMOTE (EXT1 or EXT2).
		0	Control location: LOCAL.
11	Ext ctrl loc	1	Select External Control Location EXT2. Effective if control location is parameterized to be selected from fieldbus.
		0	Select External Control Location EXT1. Effective if control location is parameterized to be selected from fieldbus.
12	User bit 0	1	User bit 0 from external control location.
		0	User bit 0 from external control location.
13	User bit 1	1	User bit 1 from external control location.
		0	User bit 1 from external control location.
14	User bit 2	1	User bit 2 from external control location.
		0	User bit 2 from external control location.
15	User bit 3	1	User bit 3 from external control location.
		0	User bit 3 from external control location.

Contents of the fieldbus Status word

Bit	Name	Value	Description
0	Ready to switch ON	1	Ready to switch ON **Note:** If the regenerative rectifier is switched off, the Start enable must be on for Ready to switch ON = 1. If the regenerative rectifier is switched on, Ready to switch ON = 1 regardless of the Start enable.
		0	Not ready to switch ON
1	Ready run	1	Ready to operate. Start command is on and main contactor is closed.
		0	Start command is not given or main contactor is open.
2	Ready ref	1	Operation enabled
		0	Operation inhibited
3	Tripped	1	Fault
		0	No fault active
4	-	1	Not in use.
		0	Not in use.
5	-	1	Not in use.
		0	Not in use.
6	-	1	Not in use.
		0	Not in use.
7	Warning	1	A warning is active
		0	No warnings active
8	Operating	1	Regenerative rectifier unit is running.
		0	Regenerative rectifier unit is not running.
9	Remote	1	Control location: REMOTE (EXT1 or EXT2).
		0	Control location: LOCAL.
10	Ready for load	1	Ready for load.
		0	Not ready for load.
11	User bit 0	1	See parameter *106.30 MSW bit 11 sel*.
		0	See parameter *106.30 MSW bit 11 sel*.
12	User bit 1	1	See parameter *106.31 MSW bit 12 sel*.
		0	See parameter *106.31 MSW bit 12 sel*.
13	User bit 2	1	See parameter *106.32 MSW bit 13 sel*.
		0	See parameter *106.32 MSW bit 13 sel*.
14	Charging	1	Charging state is active. See section *Charging* on page *23*.
		0	Charging state is not active. See section *Charging* on page *23*.
15	User bit 3	1	See parameter *106.33 MSW bit 15 sel*.
		0	See parameter *106.33 MSW bit 15 sel*.

Setting up the regenerative rectifier unit for fieldbus control

Before configuring the regenerative rectifier unit for fieldbus control, the adapter module must be mechanically and electrically installed according to the instructions given in the *User's manual* of the appropriate fieldbus adapter module.

Note: To be able to switch the main contactor and the regenerative rectifier unit on and off (Run enable signal) through the fieldbus, the Run enable command at the digital input DI2 must be on (1). That is the case when the operating switch [S11] is switched to the on (1) position.

1. Power up the regenerative rectifier unit.
2. Enable the communication between the regenerative rectifier unit and the fieldbus adapter module by setting parameter *150.01 FBA A enable*.
3. With *150.02 FBA A comm loss func*, select how the regenerative rectifier unit should react to a fieldbus communication break.
   Note: This function monitors both the communication between the fieldbus master and the adapter module and the communication between the adapter module and the regenerative rectifier unit.
4. With *150.03 FBA A comm loss t out*, define the time between communication break detection and the selected action.
5. Select application-specific values for the rest of the parameters in group *150 FBA*.
6. Set the fieldbus adapter module configuration parameters in group *151 FBA A settings*. At the minimum, set the required node address and the communication profile. Set profile to transparent 16 mode.
   Note: The parameter indexes and names vary as the way the different fieldbus adapters use these parameters.
   Example: For the FPBA adapter, set parameter *151.05 Profile* to mode *Trans16*.
7. Define the process data transferred to and from the regenerative rectifier unit in parameter groups *152 FBA A data in* and *153 FBA A data out*.
   Note: The adapter module sets the Status word and Control word automatically into parameters *152.01* and *153.01* respectively.
8. Save the valid parameter values to permanent memory by setting parameter *196.07 Parameter save manually* to *Save*.
9. Validate the settings made in parameter groups 151, 152 and 153 by setting parameter *151.27 FBA A par refresh* to *Configure*.
10. Select the fieldbus adapter A as the source of the start and stop commands for external control location EXT1 by setting parameter *120.01 Ext1 commands* to *Fieldbus A*.
11. Set the relevant control parameters to control the regenerative rectifier unit according to the application.

9

Drive-to-drive link

This feature is not supported by the current firmware version.

Further information

Product and service inquiries

Address any inquiries about the product to your local ABB representative, quoting the type designation and serial number of the unit in question. A listing of ABB sales, support and service contacts can be found by navigating to abb.com/searchchannels.

Product training

For information on ABB product training, navigate to new.abb.com/service/training.

Providing feedback on ABB Drives manuals

Your comments on our manuals are welcome. Navigate to new.abb.com/drives/manuals-feedback-form.

Document library on the Internet

You can find manuals and other product documents in PDF format on the Internet at abb.com/drives/documents.

abb.com/drives

3AXD50000020827C

© Copyright 2022 ABB. All rights reserved.
Specifications subject to change without notice.

3AXD50000020827 Rev C (EN) 2022-03-31