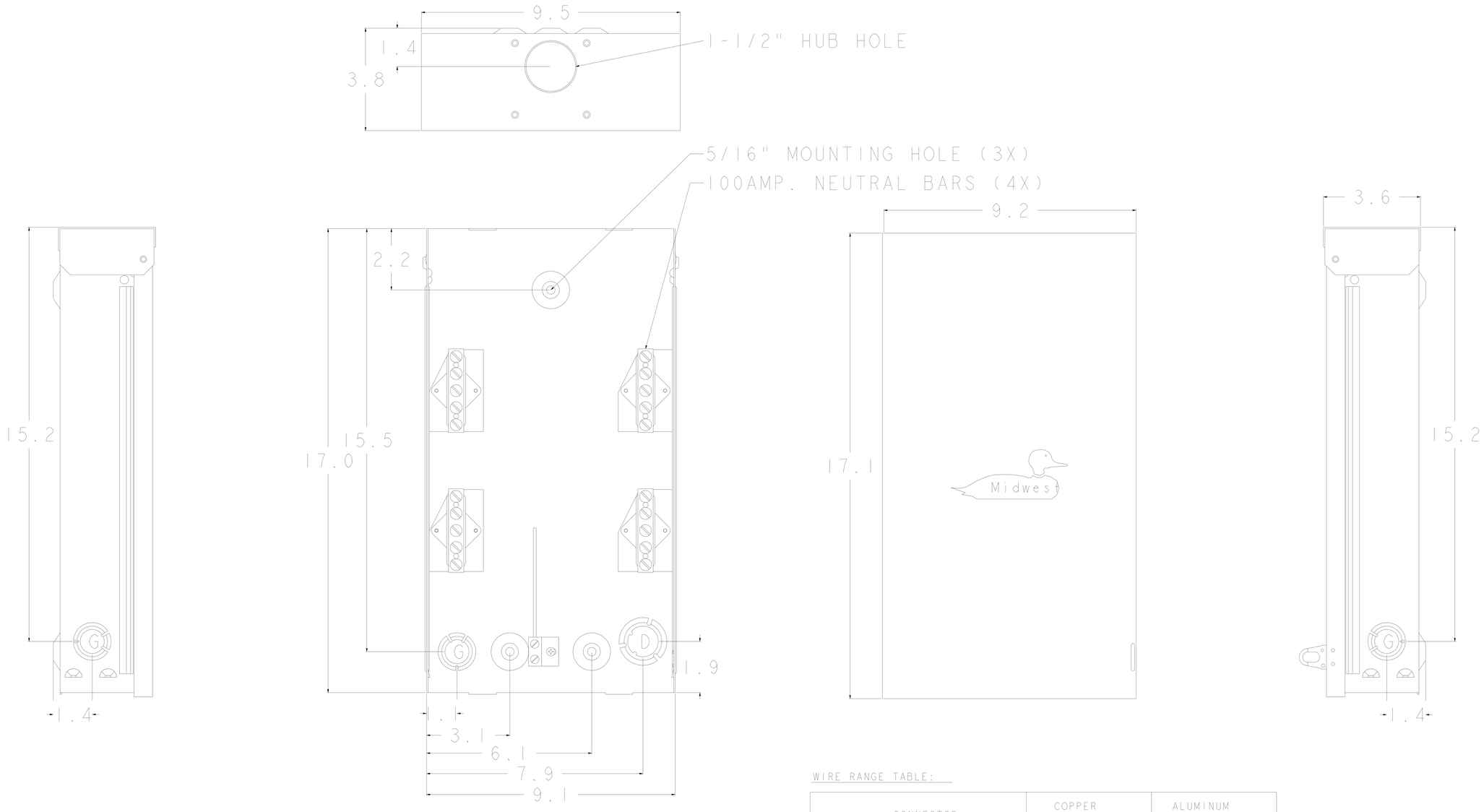


WIRE RANGE TABLE:

| CONNECTOR | COPPER | | ALUMINUM | |
|---|---|---|---|---|
| | SOLID | STRAND | SOLID | STRAND |
| LINE-8102 NEUTRAL | 14-8 | 14-1/0 | 10-8 | 10-1/0 |
| LOAD-8102 NEUTRAL | 14-8 | 14-1/0 | 10-8 | 10-1/0 |
| NEUTRAL-8102 NEUTRAL | 14-8 | 14-1/0 | 10-8 | 10-1/0 |
| EQUIP. GRD.-GL3 | 12-8 | 12-2 | 12-8 | 12-2 |

KNOCKOUT TABLE:

G= 1/2", 3/4", 1" KO
H= 9/32" KO
B= 1", 1-1/4", 1-1/2" KO
D= 3/4", 1", 1-1/4" KO

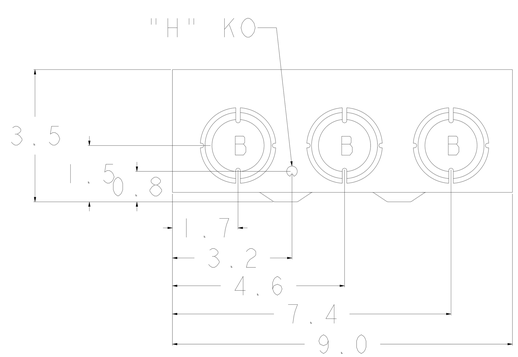


SH3

Rev.1 CR R0815611 JE 3-3-08

MIDWEST ELECTRIC PRODUCTS, INC.
Mankato, MN
Midwest

Dr. By: JDE
Ck. By:
CR: R0815611

* = Critical To Quality

Unless Otherwise Specified
Tolerances On:
3 Pl. Decimals ± .010
2 Pl. Decimals ± .030
Fractions ± 1/32
Angles ± 1/2°
Holes ± .003
Dimensions Are In Inches

AutoCad Generated

SCALE 1 : 1
SIZE A
SHEET 1 OF 1

TITLE: T3210 OUTLINE DRAWING

DWG NO: 265A6233