Distance relay type RAZFE

- Static three-phase design
- Minimum operating time approximately half a cycle
- Superior ground-fault measurement by shaped polar characteristic
- Accurate and selective measurement with small transient overreach
- Separate measuring elements at all steps for ground and phase faults
- Very low burden on current and voltage instrument transformers
- Suitable for single-phase tripping

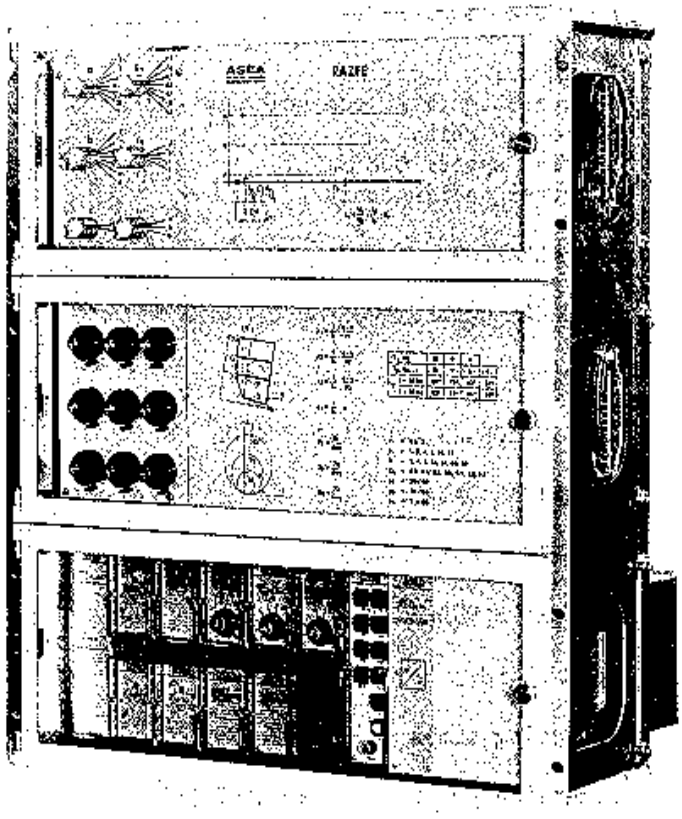

(99263)

CONTENTS

	Page
INTRODUCTION	3
General	3
Operating characteristics	4
Operating times	7
Inputs	7
Indication and signalling	8
Auxiliary voltage supply	9
Additional equipment	9
DESIGN AND MODE OF OPERATION	9
Design	9
Block diagram	11
Compensating circuits	12
Signal processing	15
Theory of measurement	16
Tripping logic	25
Auxiliary voltage supply	26
ADDITONAL EQUIPMENT	27
Power swing blocking	27
Co-operation with communication link	28
Reclosing relay	28
Testing system COMBITEST	29
Start signalling unit	29
INSTALLATION	30
EXTERNAL CONNECTIONS	30
External connection diagram	35
COMMISSIONING AND MAINTENANCE	30
TECHNICAL DATA	31
ORDERING PARTICULARS	34
REFERENCE PUBLICATIONS	34
APPENDICES	
Operating times RFF 2333 E	
Dimension print 5283 0040-C	

INTRODUCTION

General

Distance relaying is used to a large extent to provide protection against ground and phase faults on HV and EHV networks.

The operation of all distance relays is based on information available through main current and voltage transformers. Sometimes additonal information may be required from other apparatus such as receiver equipment in a communication link between two distance relays.

But, the action of a protective relay cannot only be based on the sole estimation of currents and voltages in the primary system, but must also take into consideration the steady-state and transient characteristics of the relay input sources, namely the instrument current and voltage transformers.

The demands made on protective relays are steadily increasing owing to such factors as the growing short-circuiting power and the demand of consumers for greater reliability in their power supply.

A protective relay for HV and EHV power lines must satisfy the following requirements:

a SELECTIVITY: so that only the line section affected by a fault is tripped. This requirement implies an accurate impedance measurement with low overreach and a fully secure directional discrimination, the measurement being unaffected by transient phenomena from capacitive voltage transformers.

b RAPIDITY: short operating times ensure that the power system will not run into transient stability problems and damages are kept to a minimum. This implies also the ability of the relay to operate with saturated current transformers without delays.

c FLEXIBILITY: so that the operating characteristic can be adapted to different system conditions. This implies such factors as independent reach settings in the reactive and resistive directions as well as independent reach settings at different steps, plug-in modular design and interchangeability.

d RELIABILITY: to ensure a trouble-free, secure and dependable operation (i.e. no incorrect trips and operation whenever required). This implies a careful choice of components, an extensive quality control and a skillful design which will guarantee surge immunity as well as a minimum of maintenance.

e COMPATIBILITY: so that the relay may easily co-operate with peripheral devices like three-phase or single-phase high-speed reclosing relays, communication links between the remote ends of a line, fault locating equipment, etc.

Distance relay type RAZFE is a static three step three-phase non-switched scheme that satisfies the above mentioned requirements. It is intended for use in solidly grounded networks and operates selectively for multi-phase faults as well as ground faults.

The range of ASEA distance protective schemes spans from electromechanical relays of classical design to modern static switched and non-switched schemes, that have gained for themselves a good reputation, particularly concerning reliability and the need for the minimum of maintenance.

Operating characteristics

The operating characteristic of a distance relay should be flexible in order to suit the different selectivity requirements during various system conditions, i.e. discrimination between normal load and fault condition, directional measurement and distance measurement.

These aspects have been thoroughly considered, and are reflected in the choice of operating characteristic of distance relay type RAZFE.

For ground faults the distance relay has a reactance-like operating characteristic, the reactance line being inclined by a few degrees towards the resistance axis. This provides an excellent margin for high resistance faults, which is particularly important for short line applications, and minimizes the effects of load current and remote-end infeed on distance measurement. Zero-sequence current compensation is used to allow for a relay setting based on positive sequence value. Correct directional action is ensured by using healthy phase-to-phase voltages, which makes the relay decision completely safe even in the event of close-up faults independent of whether the voltage instrument transformers are of the magnetic or capacitive type.

To avoid load encroachment problem the relay is provided with blinder characteristic. Independent setting possibilities in the resistive and reactive directions provide an excellent discrimination between load and fault conditions even for long line applications.

The operating characteristic for ground faults is shown in Fig. 1 assuming zero source impedance condition.

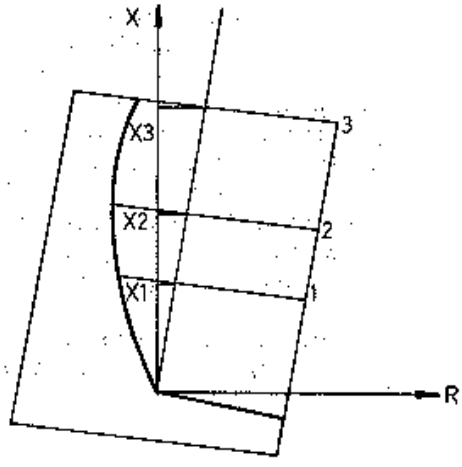

Fig. 1. Operating characteristic for ground faults.

For three-phase faults the measuring elements for ground faults are partly used and a voltage memory circuit ensures correct operation even in the event of close-up faults. The operating characteristic of three-phase fault is shown in Fig. 2.

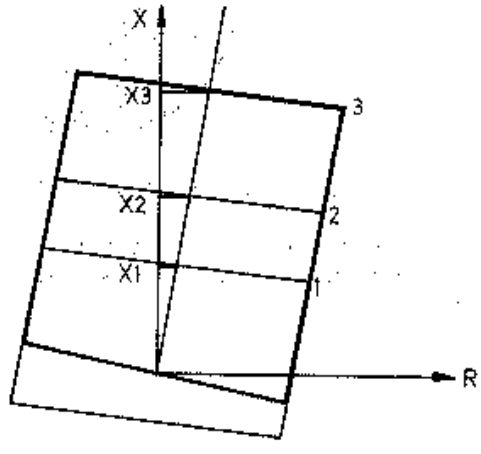

Fig. 2. Operating characteristic for three-phase faults.

For two-phase faults a circular operating characteristic is adopted mainly because the fault resistance is low, the arc length being limited by the conductor spacing, there is no need for more sophisticated operating characteristics. The phase measuring elements have an inherent directional action giving a maximum of selectivity.

A two-phase-to-ground fault in a system with solidly grounded neutral presents special problems since the ground-fault measuring elements will tend to yield measurement errors due to the fault resistance to ground. In distance relay type RAZFE advantage is taken of the fact that the measuring elements for two-phase faults operate correctly for faults along the majority of the line up to the set reach while the ground-fault measuring elements operate correctly for close-up faults. Obviously, in order to avoid overreaching under such conditions, a particular ground-fault measuring element is selected for a particular set of phases involved in the fault, thus giving selective and fast operation for faults within the protected zone.

The operating characteristic for two-phase faults is shown in Fig. 3 assuming zero source impedance condition.

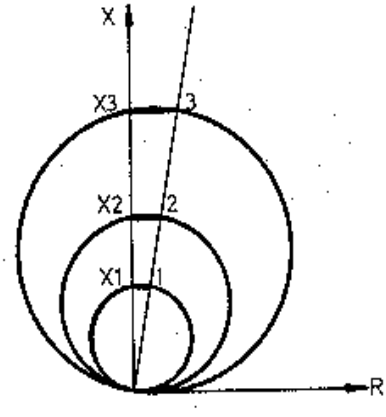

Fig. 3. Operating characteristic for two-phase faults.

The setting ranges for the reach in the reactive and resistive directions are shown in tabel 1.

Rated secondary current of the instrument transformers I A	Setting range for the reach in the reactive direction for step 1 at a rated frequency f = 50 Hz X1 ohms/phase	f = 60 Hz X1 ohms/phase	in the resistive direction for all steps R_b ohms/phase
1	0.250-64.00	0.30-76.80	2-50
2	0.125-32.00	0.15-38.40	1-25
5	0.050-12.80	0.06-15.36	0.4-10

Tabel 1. Setting ranges in the reactive direction for step 1, X1, and in the resistive direction, R_b. The setting ranges for step 2, X2, are 1 to 5 times X1 and for step 3, X3, are 1 to 10 times X1.

Operating times

Due to a judicious choice of measuring quantities the dynamic overreach is very low, and the typical operating times of the relay ranges between half a cycle and a cycle of power frequency, the dispersion in operating times being low even at high system impedance ratios.

This is illustrated in the constant operating time characteristic of appendix RFF 2333 E. The maximum and minimum operating times at any given fault location and system impedance ratio were obtained by varying the fault incidence angle.

Inputs

Besides the three-phase ac current and voltage inputs and dc inputs for auxiliary power supply, four inputs are provided for the purpose of altering the mode of operation of the distance relay. These inputs are electrically actuated for instance by external contacts, switches etc., and the information is transmitted into the distance relay through interfacing relays in a unit type RXMBB 1. This unit is normally supplied for use at the same voltage as the station battery.

The following inputs are available in the standard design:

CR (Carrier receiving). Received signal from remote line end. This input can be interpreted upon the type of relaying scheme i.e. tripping or blocking scheme, and can be used for step acceleration.

BC (Breaker closure). This input enables the switch-into-fault protection, for clearing the case of a breaker closing against a persistant close-up fault consisting of e.g. forgotten grounding devices.

BLOCK Blocking of the relay by some external device like a miniature circuit-breaker in the secondary ac voltage circuit.

RESET This input, whenever actuated, will reset all indicators in the relay.

Indication and signalling

The distance relay in its standard design has flag indicators and corresponding ten signalling make contacts housed in a two-relay-seats unit RXSK 2H of COMBIFLEX plug-in design. On request, two more indicators and associated signalling contacts can be accomodated in the same unit. The indicators are reset electrically by a push-button in the front of the unit. It is also possible to reset the indicators electrically by a contact through an input to the distance relay. This last feature is particularly of interest when remote-resetting is requested in un-manned stations.

The indicators are labelled as follows:

RN Start indication for single-phase fault RN.

SN Start indication for single-phase fault SN.

TN Start indication for single-phase fault TN.

2 Ø Start indication for two-phase faults (RS, ST, TR).

3 Ø Start indication for three-phase faults.

U General tripping

TK2 Operation of step 2 time-lag relay.

TK3 Operation of step 3 time-lag relay.

P Power swing blocking (connected if power swing blocking operation is provided)

= DC power supply interruption.

It should be noted that all signalling contacts are connected to a common dc bus in the plug-in unit.

Auxiliary voltage supply

The measuring circuits and output relay coils of the distance relay are supplied from the station battery via a built-in dc/dc-converter (direct voltage converter) type RTQA 180, thus ensuring an adequate separation between the relay and the auxiliary power source.

Additional equipment

The distance relay can also be provided with an impedance power swing blocking relay, high-speed reclosing relay, appropriate logic for co-operation with the distance relay at the remote end of the line via communication link, and interface circuits for co-operation with fault locating equipment etc.

DESIGN AND MODE OF OPERATION

Design

The static distance relay type RAZFE is housed in a COMBIFLEX equipment frame size 12S (21" high) with three apparatus frames, 60C wide (S = 44.45 mm = 1.75 in., C = 7 mm = 0.28 in.). See Fig. 4 and enclosed dimension print appendix 5283 0040-C. Further particulars of the modular system COMBIFLEX can be found in Catalogue RK 92-10 E.

The top and middle apparatus frames contain the signal generation and signal processing parts of the distance relay and can be considered as fixed, intrinsic parts that remain generally unaffected by application requirements. The lowest apparatus frame contains plug-in modules and is dedicated to versatile hardware such as time-lag relays, input and output circuits which can vary in complexity depending on the application requirement.

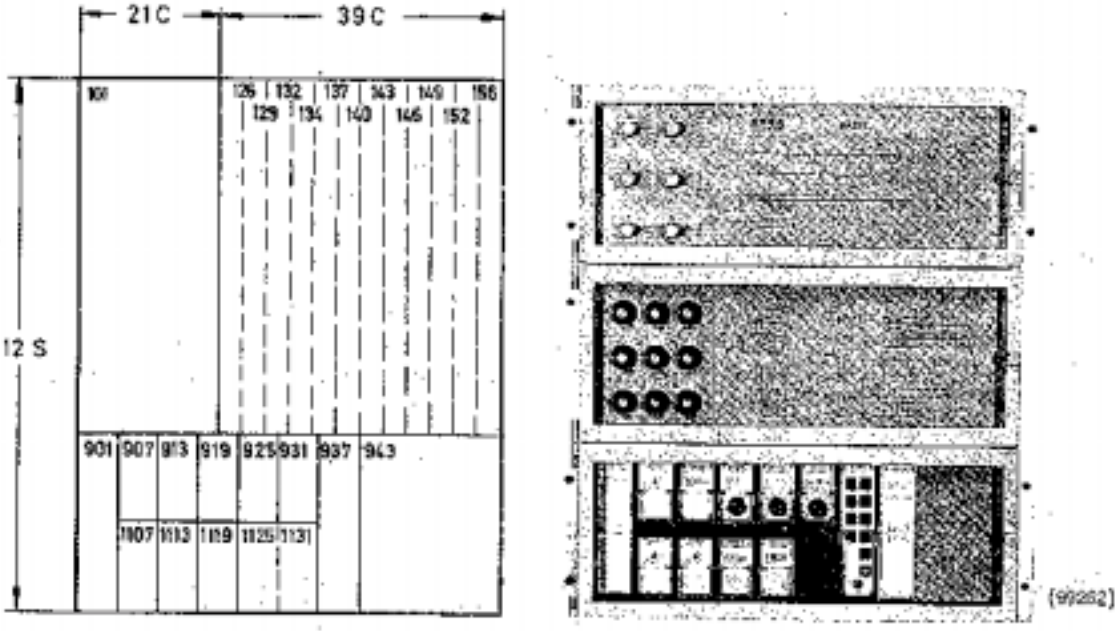

Fig. 4. Static distance relay type RAZFE for single-phase and three-phase tripping. The sketch shows the position references for the function modules.

101	Transformer and compensating unit with all setting adjustment knobs.
126, 129...156	Printed-circuit boards with static components, forming the measuring circuits of the relay.
901	Test switch RTXP 18.
907, 1107, 1113	Auxiliary tripping relays type RXME 1.
913	Tripping unit type RXMBA 1.
919	Zero-sequence current unit type RXIED 1 with auxiliary relay for interfacing with fault locating equipment.
925, 931	Time-lag relays type RXKB 1 for second and third step operation.
937	Signal and indicator unit type RXSK 2H.
943	Direct voltage converter type RTQA 180.
1119	Input relay unit type RXMEB 1.

The modules at position 901 (RTXP 18), 919 (RXIED 1) are delivered only on request when these properties are required. The two relay seats 1125 and 1131 can accomodate any additional units required by a particular application.

Block diagram

The block diagram in Fig. 5 shows the structure of the distance relay type RAZFE.

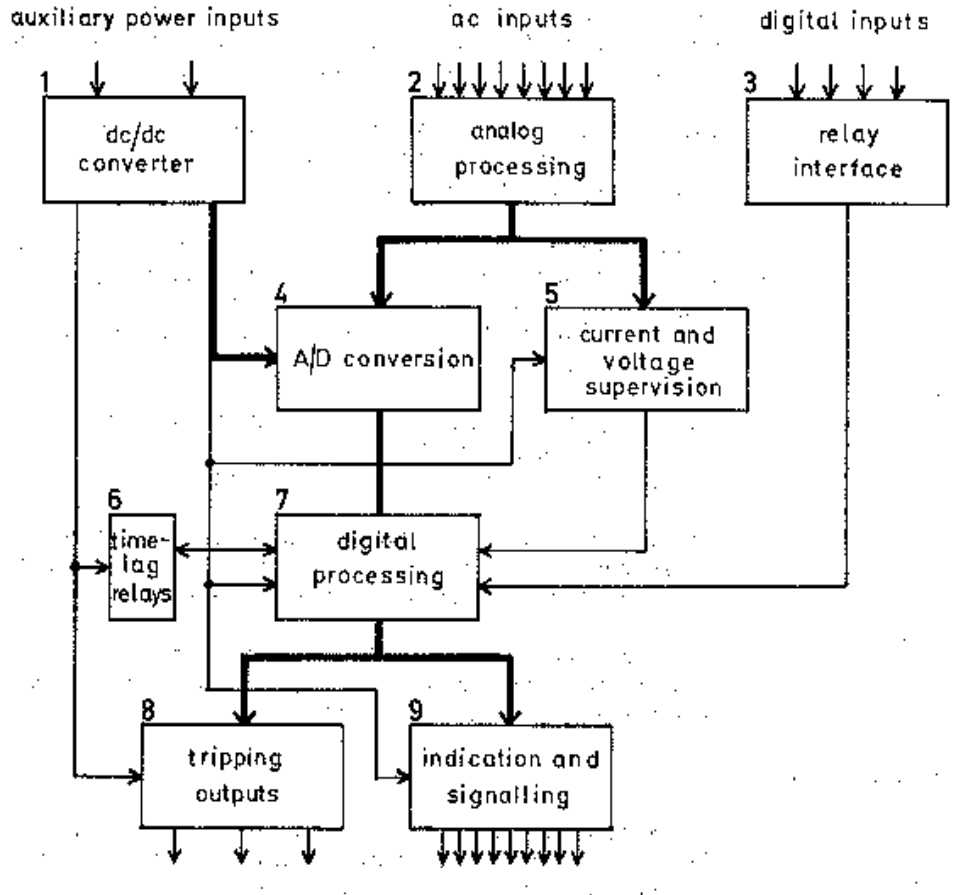

Fig. 5. Block diagram for distance relay type RAZFE.

The ac currents and voltages of the three phases are fed to block 2 for analog processing in compensating and setting circuits. In this block the measured currents and voltages are developed into a set of quantities required for the operation of the distance relay. In block 4 the phase information contained in these quantities are extracted by converting the analog signal to digital square-wave signals. These signals are subsequently fed to block 7 for digital processing in phase comparators, logic gates etc. in order to perform all the functions implied by the distance relay principle.

It is to be noted that the digital processing carried out in block 7 is controlled by current and voltage supervision functions carried out in block 5.

Block 8 acts as an interface to the circuit-breaker trip coils and indicates the single-phase tripping capability of the relay.

Block 9 gives a display of the events whenever a power system disturbance occurs for which the relay reacts. Signalling contacts enable a communication with peripheral devices like sequence of events recorders or reclosing relay, etc.

The relay interface of block 3 links external digital inputs like contact function from a miniature circuit-breaker etc. with the internal logic of block 7.

The direct voltage converter in block 1 provides a galvanic separation between the station battery and the internal circuits of the distance relay.

The time-lag relays of block 6 determine the operating time of the back-up function of the distance relay and are therefore linked to block 7.

Compensating circuits

As mentioned before all quantities necessary for impedance and directional measurements are developed in the compensating circuits as shown in Fig. 6.

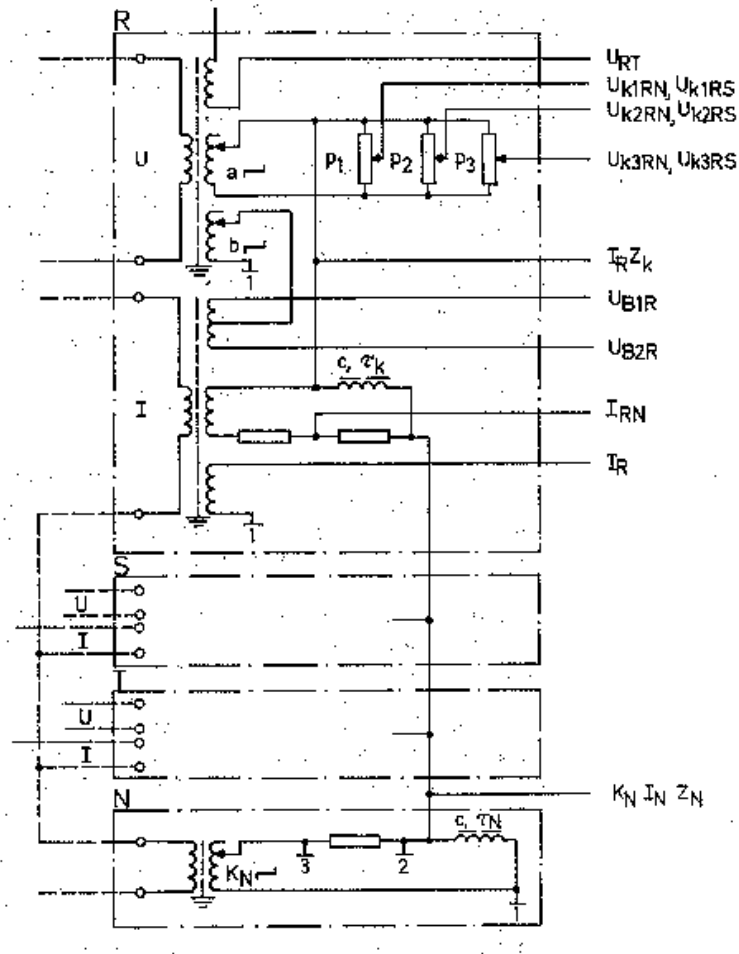

Fig. 6. Principle diagram of compensating circuits. 1, 2 and 3 are three separate reference points.

U_{kiRN}, U_{kiRS}	Compensated voltage used for measuring at step i. i = 1, 2 and 3.
Z_k, Z_N	Replica impedances of the normal line impedance and neutral impedance respectively.
U_{B1R}, U_{B2R}	Measured voltage used for limiting the reach in the resistive direction. 1 = forward, 2 = reverse.
a, b, c, p_1, p_2, p_3, K_N, τ_k, τ_N	Factors used for the setting

AC voltages and currents are fed to the distance relay through input transformers provided with electrostatic shields thus ensuring galvanic isolation between the relay and the instrument transformers, and an effective attenuation of possible spurious signals on the input leads.

Each phase block has a replica impedance of the line, Z_k, with setting possibilities for the reactance (a-, c- and p-factors) and for the time constant (L/R) of the line (τ_k-factor), the latter parameter being a measure of the characteristic angle of the line. Moreover two symmetrical image impedances which are mainly resistive help determine the load discrimination point or resistive reach R_b, of the relay, the setting being governed by the b-factor. (For further details see TECHNICAL DATA).

A separate setting of the reactive reach at different steps is possible by means of p_1, p_2 and p_3 factors and the resistive reach of the characteristic can be set independent of the reach in the reactive direction.

A fourth block built in the same fashion as the phase-blocks makes it possible to represent the neutral impedance of the line, Z_N, with a separate adjustment of a replica impedance. This means that the zero-sequence compensation factor of the line can be matched both in amplitude and phase by a suitable adjustment of the K_N-factor and the time constant τ_N of the replica impedance in the neutral circuit of the distance relay.

It is to be noted that no further mixing transformers are used after the input stage, this being done in order to minimize the number of energy storing devices, thus improving the response of the relay during transient conditions.

Linear combinations of voltages and currents are simply developed by measuring across two points either from phase to phase or from phase to ground. The necessary galvanic separation between the different reference points is obtained through independent and galvanically separated dc systems provided by the built-in dc/dc-converter.

As an example it can be seen from Fig. 6 that the quantity U_{k1RN} is developed by summing up the voltages:

$$U_R, \quad -I_R Z_k, \quad -K_N I_N Z_N$$

thus giving rise to a compensated voltage suitable for impedance measurement. Note that Z_k is a function of a-, c-, p- and τ_k-factors and Z_N is a function of a-, c-, p- and τ_N-factors.

This powerful technique for deriving the measuring quantities ensures a maximum of signal accuracy in the information flow within the circuits of the relay, especially when it comes to sudden changes in the electrical state of the power network after a fault.

Signal processing

The analog signals developed in the compensating circuits are processed in different ways; some undergo, for example, amplitude comparison in order to detect a low voltage or a high current, etc., other signals are squared in order to detect zero-crossings accurately and then undergo phase comparison in sequential logic circuits (SLC). Impedance and directional measurements are carried out by phase comparators, while supervision and control functions are made by amplitude comparators. It will be noted that the measuring signals are filtered before being fed to phase comparators in order to reject unwanted frequency components.

To obtain measuring accuracy on the first step even under adverse signal conditions special active filters with variable transmission characteristics are used in a novel manner and react to control signals in such a way that delays normally introduced by conventional circuits can now be cut down to a minimum without jeopardizing the measurement or infringing on security.

Fig. 7 is a block diagram showing the effect of this special filtering technique on one input to a sequential logic circuit.

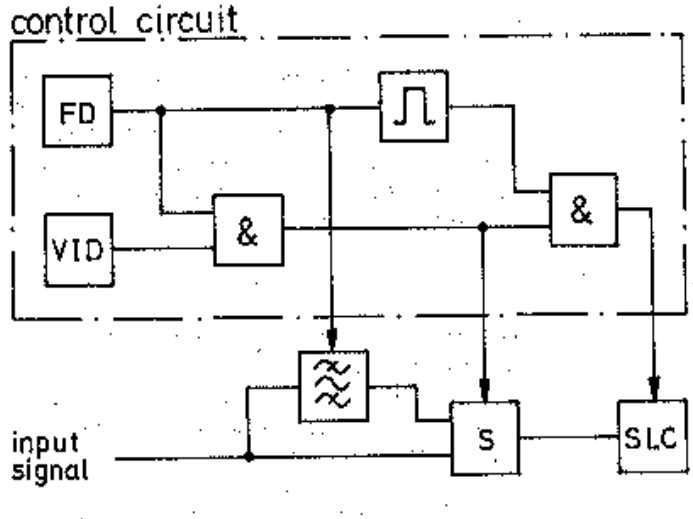

Fig. 7. Block diagram of special filter circuit.

FD Fault detector
VID Voltage and current detector
S Static switch
SLC Sequential logic circuits

Basically, there are two signal channels: one which is non-filtered and another which goes through a filter that has normally zero transmission and no energy storage. During normal load conditions the non-filtered channel is connected to the sequential logic circuit SLC through a static switch S.

Subsequent to a power system disturbance or a fault that is detected by a fast fault detector FD built into the distance relay, a control signal is sent to alter the filter characteristic to full transmission thus allowing the filter to adapt itself rapidly to the new electrical state.

If the nature of the fault is such that one may suspect erroneous information from a capacitive voltage transformer (CVT), then the switch S has to select the filtered channel and a second control signal has to reset the SLC for a short time in order to start a new measurement process.

Since a large voltage drop on the primary side of the CVT generates secondary transients that may fool the measurement, a fast voltage and current detector VID sets a limit on the voltage collapse that may be tolerated without fear of large measurement errors, and whenever required it acts on the control signals to the static switch and the SLC.

In this way filtering is done only when necessary and the overall speed of operation of the distance relay is thereby enhanced.

Signals are processed simultaneously at all steps on both half-cycles independently yielding both redundancy and rapidity. Furthermore, use of high-level semiconductor logic and integrated circuits such as operational amplifiers and logic gates guarantees a superiour noise immunity and a compact design.

Theory of measurement

As mentioned before measurement is done by phase comparison of measuring signals in sequential logic circuits. As an example, with alternating input signals A and B, the phase comparison is then governed by the following general relationship:

$$\theta_1 \leqslant \arg(A) - \arg(B) \leqslant \theta_2$$

Where θ_1 and θ_2 are two arbitrary angular limits and arg (A) is the phase angle of signal A referred to an arbitrary reference, and arg (B) is the phase angle of signal B referred to the same reference. It should be noted that the above expression can also be written as:

$$\theta_1 \leqslant \arg (A/B) \leqslant \theta_2$$

Single-phase faults

Considering the ground-fault measuring element, ZR, of phase R during a single-phase-to-ground fault, the distance measurement is obtained at each step by phase comparison between a compensated voltage and a measuring current.

$$U_{kRN} = U_R - I_R Z_k - K_N I_N Z_N$$

$$I_{RN} = I_R + K_N I_N$$

where U_R and I_R are the voltage and the current of phase R and I_N is the current in the neutral. Z_k and Z_N are the appropriate replica impedances of step 1, 2 or 3 and K_N is a factor for zero-sequence compensation.

The element detects a reactance lower than the set reach when the following condition is fulfilled:

$$\pi + \alpha \leqslant \arg (U_{kRN}) - \arg (I_{RN}) \leqslant 2\pi + \alpha \qquad (1)$$

where α is the slope of the boundary line, normally $\alpha = -(6 \pm 2)$ degrees.

The condition (1) indicates that the operating boundary of the relay in the R-X plane is a straight line passing through the tip of the phasor Z_k and having a slope of α with the resistance axis. This is further illustrated in Fig. 8 by the three lines L1, L2 and L3 for the first, second and third step distance measurement respectively. As mentioned before, measurement is carried out simultaneously at all steps. For the third step measurement I_R is used instead of I_{RN} in equation (1) above.

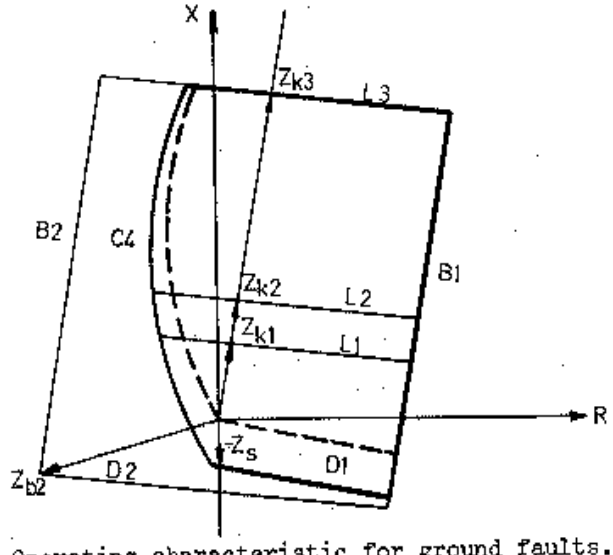

Fig. 8. Operating characteristic for ground faults. The dashed curves correspond to a zero source impedance condition.

The directional action is achieved by phase comparison between a current dependent quantity and the phase-to-phase voltage of the two unfaulted phases. This ensures always a correct directional discrimination even for close-up faults independent of any transient errors due to a capacitive voltage transformer, since the voltage of the faulted phase does not appear in the signals used for measurement.

For the ZR function the measuring quantities for directional action are thus:

$$IZ_R = I_R Z_k$$

$$U_{TS} = U_T - U_S$$

Faults in the forward direction are detected when the following condition is fulfilled:

$$0 \leqslant \arg(U_{TS}) - \arg(IZ_R) \leqslant \pi \qquad (2)$$

It can be shown that expression (2) corresponds in the RX-plane to a straight line having a slope equal to arg $(Z_k) - \pi/2$ and passing through the tip of a phasor $-Z_s$ where

$$Z_s = \frac{2Z_{s2} + Z_{s0}}{2 + \frac{Z_0}{Z_1}}$$

Z_{s2} and Z_{s0} are the negative and zero-sequence source impedances. Z_1 and Z_0 are the positive and zero-sequence impedances of the line respectively. This is further illustrated in Fig. 8 by the line D1.

For all practical cases it may be assumed that the source impedance is non-zero, and the above measurement allows for an appreciable margin in the fourth quadrant of the RX-plane. Note that Fig. 1, 2 and 3 were drawn for extreme condition of zero source impedance.

It should be noted that although the line D1 of Fig. 8 does not necessarily pass through the origin of the RX-diagram, the directional action is still maintained and the relay will not operate for a fault in the reverse direction.

Limitation of the reach in the resistive direction is obtained by phase comparison of a current dependent quantity and two compensated voltages.

For the ZR function the measuring quantities are:

$$IZ_R = I_R Z_k$$
$$U_{B1R} = U_R - I_R Z_{b1}$$
$$U_{B2R} = U_R - I_R Z_{b2}$$

where $Z_{b2} = -Z_{b1}$ and is mainly resistive corresponding to the reach in the resistive direction. Z_b = total fault impedance.

Operation is obtained whenever the following two conditions are fulfilled:

$$0 \leqslant \arg(U_{B1R}) - \arg(IZ_R) \leqslant \pi \qquad (3)$$

$$\pi \leqslant \arg(U_{B2R}) - \arg(IZ_R) \leqslant 2\pi \qquad (4)$$

The above expressions (3) and (4) indicate an operating area in the RX-plane, that is contained between two straight lines having a slope equal to arg (Z_k) and passing through the tip of phasors corresponding to

$$\pm \frac{3Z_{b1}}{2 + \frac{Z_0}{Z_1}}$$

This is illustrated in Fig. 8 by lines B1 and B2.

It should be observed that the factor $\frac{3}{2 + \frac{Z_0}{Z_1}}$ is [illegible] in order to describe the boundaries of (3) and (4) in a positive sequence impedance plane. Since the loop impedance of the line is

$Z_1 \frac{2 + \frac{Z_0}{Z_1}}{3}$, the term $\frac{3Z_{b1}}{2 + \frac{Z_0}{Z_1}}$ indicates a proportioning

of the fault resistance of the loop, between the positive sequence and the neutral, thus the relay operates for a total fault resistance corresponding to Z_{b1}.

Limitation of the reach in the third and fourth quadrants of the RX-plane is achieved by phase comparison between the current and a compensated voltage.

It should be noted that the reach in the reverse line direction is about 40 percent of the reach in the resistive direction.

For the ZR relay the condition that must be fulfilled for operation in the third and fourth quadrants is:

$$\alpha \leqslant \arg (U_{B2R}) - \arg (I_R) \leqslant \pi + \alpha \qquad (5)$$

The boundary corresponding to (5) is denoted by D2 in Fig. 8.

For starting and phase selection purposes an additional phase comparison is made between two compensated voltages derived from characteristic quantities of the phase of the faulted loop and an adjacent phase.

For the ZR-function a boundary is created in the second and third quadrants of the RX-plane by the condition:

$$0 \leqslant \arg (U_{k4RN}) - \arg (U_{k4TN}) \leqslant \pi \qquad (6)$$

The compensated voltage U_{k4RN} and U_{k4TN} are in principle like U_{kRN} but with a replica impedance Z_{k4} that is a fixed multiple of the replica impedance at the third step Z_{k3}.

It can be shown that the condition (6) corresponds in the impedance plane to a circle passing through the tip of a phasor Z_{k4} with the location of its centre being a function of Z_{k4} and the source impedances of the power system. At zero source impedance condition the circle passes also through the origin, but in the general case of finite source impedance, it does not, as clearly indicated by the arc of circle C4 in Fig. 8.

The resultant operating characteristic of the ZR-function at single-phase faults is determined by suitable combinations of conditions (1) to (6).

Although it may appear that the measuring element for ground faults is based on a set of different conditions, it should be appreciated that those conditions are not unrelated to each other, in fact the particular choice and special combination of the measuring signals eliminates any tendency of racing between operation and reset.

The ground-fault measuring elements for S- and T-phase ZS and ZT respectively are built in a similar manner as the ZR-function taking into account phase index permutation of the signals.

Two-phase faults

Two-phase faults are detected by directional impedance measuring elements (ZK) have a circular operating characteristic.

Basically, the measuring is performed by phase comparison of two compensated voltages, based on inter-phase voltage and current quantities as below:

$$U_{kRS} = (U_R - U_S) - Z_k\,(I_R - I_S)$$

$$U_{kST} = (U_S - U_T) - Z_k\,(I_S - I_T)$$

$$U_{kTR} = (U_T - U_R) - Z_k\,(I_T - I_R)$$

The operating area can be determined by the condition:

$$\pi \leqslant \arg\,(U_{kRS}) - \arg\,(U_{kST}) \leqslant 2\pi \qquad (7)$$

Although condition (7) is sufficient for obtaining operation at all two-phase faults, thus implying a polyphase relay capability, the simple signal generating features of the compensating circuits makes it possible to carry out simultaneously two more phase comparisons, one being between U_{kST} and U_{kTR} and the other being between U_{kTR} and U_{kRS}.

Combining the result of the three-phase comparisons into a single output by a two-out-of-three mode of operation, one gets a higher redundancy for the system without infringing on the operating area governed by expression (7) since all three conditions always give the same result independent of the phase index of faulted two phases.

In the RX-plane the operation condition of the ZK-function is a circle passing thorugh the tip of the phasor Z_k and also through the tip of the phasor $-Z_{s2}$, and having its centre at the tip of the phasor

$$\frac{1}{2}\,(Z_k - Z_{s2})$$

This is illustrated in Fig. 9 by the circles ZK1, ZK2 and ZK3.

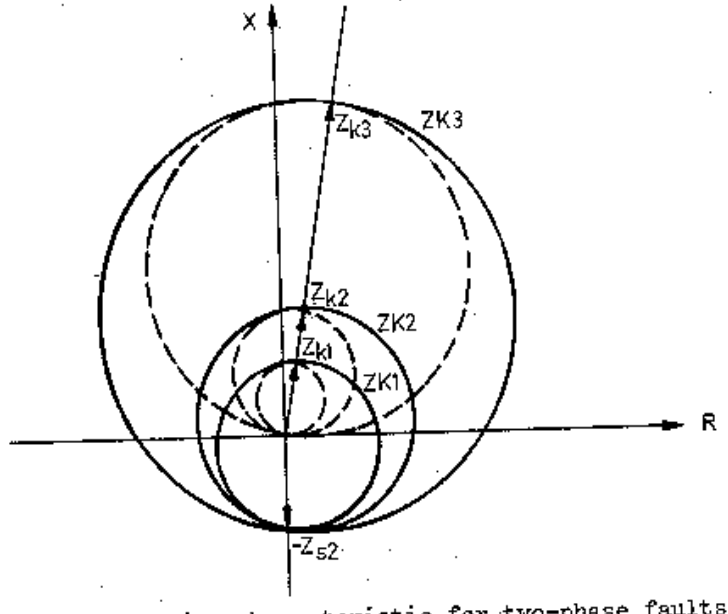

Fig. 9. Operating characteristic for two-phase faults. The dashed curves correspond to a zero source impedance condition.

The dependency of the operating characteristic of the ZK-function on the source impedance has the beneficial effect of extending the reach in the resistive direction with increasing source impedance, thus allowing for a better coverage of fault resistance.

It should be noted that although the circles of ZK1, ZK2 and ZK3 in Fig. 9 do not necessarily pass through the origin of the RX-diagram, the directional action is still maintained and the relay will not operate for a fault in the reverse direction.

A two-phase-to-ground fault in a system with solidly grounded neutral presents special problems. Such a fault, for example STN, can in principle be measured in the following three ways:

measuring of phase to phase fault ST

measuring of ground fault SN

measuring of ground fault TN

The two-phase measuring element ZK measures the phase fault correctly with the exception of certain cases of close-up faults when tripping may not occur. The measurement being practically independent of the fault resistance to ground.

The ground-fault measurements will have an error due to the fault resistance to ground as that the element measuring in the leading phase (ZS) will have its reach increased while the element measuring in the lagging phase (ZT) will have its reach decreased. The operation will be correct for close-up faults. It is thus clear that measuring the ground fault in the leading phase should not be permitted since there is an obvious risk of nonselective operation.

As earlier mentioned a two-phase-to-ground fault is measured in distance relay type RAZFE by the phase measuring element ZK and the ground-fault measuring element in the lagging phase. The relays thus combine to ensure proper selective operation.

The ZK element does not operate for three-phase faults. At single-phase faults the relay is automatically blocked by the phase selection conditions of the ground-fault measuring elements.

The phase selection condition of the ground-fault measuring elements (see condition (6) for ZR) is also used for starting purposes for two-phase fault thus making full use of the information available within different blocks of the distance relay.

Again, simultaneous measurement is carried out at the first, second and third step by ZK1, ZK2 and ZK3 respectively.

Three-phase faults

As earlier mentioned the ground-fault measuring elements are partly used at three-phase faults since the ZK measuring element will not respond.

The starting and phase selection feature C4, as well as the directional feature D1 of Fig. 8 is dispensed with when it comes to three-phase faults, and the basic functions of the modified ZR, ZS and ZT elements become: distance measurement, load discrimination and starting.

Condition (1) will in this case correspond to a straight line in the RX-plane, passing through the tip of phasor Z_k, and having a slope of α with the resistance axis, thus giving the distance measurement.

Conditions (3) and (4) will correspond to an operating area, in the RX-plane, that is contained between two straight lines having a slope equal to arg (Z_k) and passing through the tip of phasors corresponding to $\pm Z_{b1}$, thus giving the required load discrimination feature.

Condition (5) will correspond to a straight line passing through the tip of phasor Z_{b2}, and having a slope of α with the resistance axis. This condition together with (1), (3) and (4) will always ensure starting in the event of a circuit-breaker closing against a close-up metallic three-phase fault even if the three-phase voltages are zero both before and after breaker closure. Under such conditions, it is required that input BC (breaker closure) is activated shortly before closure in order to by-pass temporarily the directional action (according to condition (8) below) and tripping is allowed if starting occurs within three seconds after initiation of the closure.

Correct directional action even in the event of close-up three-phase faults is ensured by a special function DIMR having memory action and based on the phase comparison outline below:

$$0 \leq \arg(U_{MTS}) - \arg(IZ_R) \leq \pi \qquad (8)$$

where $IZ_R = I_R Z_k$

$U_{MTS} = (U_T - U_S)$ with memory action

Condition (8) corresponds in the RX-plane to a straight line passing through the tip of phasor $-Z_{s1}$ (the positive sequence source impedance) and having a slope equal to arg $(Z_k) - \pi/2$.

However, it should be rememberd that for all times that are larger than the memory time of the relay, condition (8) reverts to a straight line passing through the origin with the same slope as before. Thus it may be understood that the above condition is a dynamic one giving initially a certain margin in the fourth quadrant of the impedance plane for all non-zero source impedance conditions.

The operating area at three-phase faults is shown in Fig. 10.

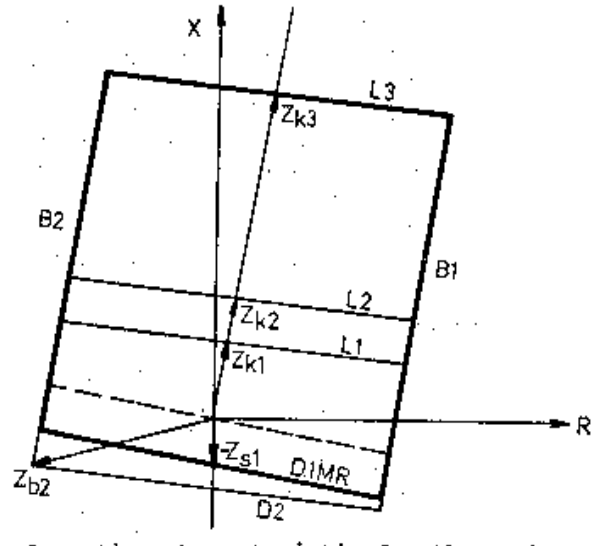

Fig. 10. Operating characteristic for three-phase faults. The dashed curve is valid for all times larger than the memory time of the relay.

As was mentioned earlier measurement is carried out simultaneously at all steps.

Tripping logic

Denoting the ground-fault measuring elements by ZR, ZS, ZT and the two-phase fault measuring element by ZK, the tripping logic can readily be understood by examination of Fig. 11, a single-phase tripping scheme being assumed.

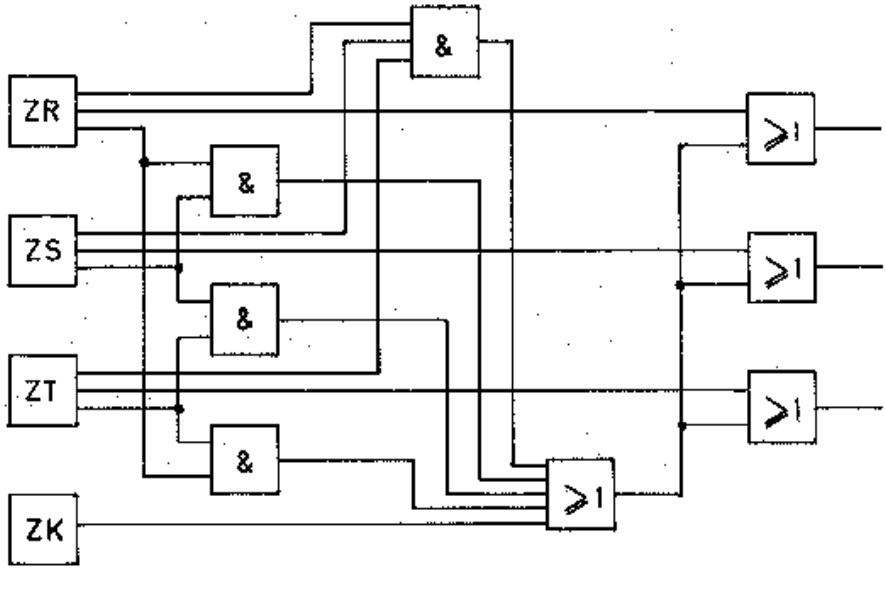

Fig. 11. Principle diagram of the tripping logic.

The measuring elements at different steps operate in parallel but the elements of the second and the third step are allowed to trip only after the time-lag of the respective step has elapsed, the first step being instantaneous. However, wherever required the time-lag relay of the second or the third step can be by-passed by activation of the CR (carrier receiving) input of the protective relay, after having performed a suitable internal coding of this input.

Auxiliary voltage supply

The measuring circuits and output relay coils of the distance relay are supplied from the station battery via a built-in direct voltage converter type RTQA 180 which provides a full galvanic isolation between the relay circuitry and the auxiliary power source, and suppresses effectively possible surges that might be impressed on the dc input.

Fig. 12 is a block diagram illustrating the operating principle of RTQA 180.

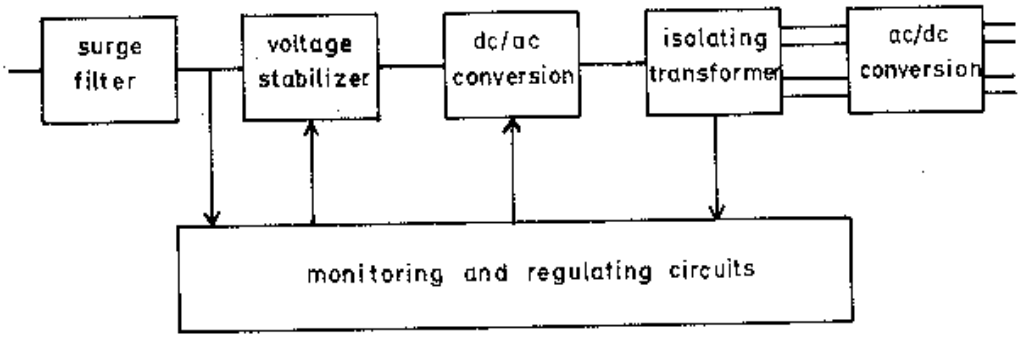

Fig. 12. Block diagram of direct voltage converter type RTQA 180.

The isolating transformer is fitted with an electrostatic shield, and has several circuits for the output voltages that are rectified and smoothed separately thus providing the necessary galvanic isolation for signal generation in the compensating circuits.

The monitoring and regulating circuits provide the constant voltage feature required by the static circuits of RAZFE as well as an overcurrent protection for the converter.

ADDITIONAL EQUIPMENT (on request)

Power swing blocking

From a power system operation point of view it is not desireable to obtain tripping from a distance relay during a power swing. The fluctuations of voltage and current occuring in such a case can make it impossible for the relay to discern between a three-phase fault and a heavy power swing.

To cope with the conditions outlined above, distance relay type RAZFE can be supplemented on request with a built-in, static power swing blocking element that is normally housed within the static signal processing block of the distance relay. Detection of power swing is made by measuring the time that elapses between the operation of two concentric impedance elements. The operating impedances of these elements are linked to the set resistive reach of the distance relay one element being at 100 percent and the other at 120 percent.

The output from the impedance elements is fed to a logic circuit where it is determined whether it is a power swing or a fault that has occured on the network. This is done by considering the fact that the change in apparent impedance during a power swing is very slow compared to the sudden change when a fault occurs.

The time interval used in the power swing blocking element is 35-40 ms which means that if the change in apparent impedance is longer than this fixed time the power swing blocking element will block the operation of the distance relay for approximate 2 seconds. On the other hand if the change is faster than 35-40 ms the distance relay is permitted to operate in the normal way.

Thanks to the input labelled BLOCK (see item "Inputs" page 8) it is also possible to supplement a standard RAZFE with an external power swing blocking relay housed in a separate equipment frame possible together with other additional equipment.

Co-operation with communication link

The first step of a distance relay is normally set in an underreaching mode. This setting is chosen to ensure selective operation. For important power lines it is desirable to obtain instantaneous tripping at both ends of the line, independent of the location of the fault. For auto-reclosing it is also important that the relevant circuit-breakers operate simultaneously, which makes it possible to reduce the set dead time interval.

This desired simultaneous operation can be obtained by means of exchange of information between the two distance relays at the ends of the line section via a high-frequency link coupled to the power line, by a radio link or by pilot-wires.

The relay is compatible with blocking as well as tripping schemes and lends itself to different protection philosopies. For example an input is readily provided and when energized, it allows for an instantaneous transition from the first to the second or the third step of the relay, thereby making it operate as an "acceleration scheme". Another input will block tripping whenever energized. Carrier sending can also be initiated by a combination of different criteria derived from the different elements of the distance relay.

Reclosing relay

The distance relay can be made to co-operate with a reclosing relay. The following functions can be obtained depending on the type or reclosing relay used.

Distance relay designed for three-phase tripping

- o three-phase tripping and reclosing for all types of faults
- o definite three-phase tripping for all types of faults

Distance relay designed for single- and three-phase tripping

- o single-phase reclosing at single-phase faults

  three-phase reclosing at multi-phase faults

- o single-phase reclosing at single-phase faults

  three-phase definite tripping at multi-phase faults

- o three-phase tripping and reclosing at single- and multi-phase faults

- o three-phase definite tripping at single- and multi-phase faults

The reclosing relay is normally housed in a separate equipment frame maybe together with other additional equipment.

Testing system COMBITEST

To simplify the routine checking of the distance relay a test switch type RTXP 18 can be included in the relay. The COMBITEST testing system is described in Catalogue RK 92-11 E.

The relay can be tested with a relay testing set developed for this purpose. Separate instructions for commissioning and testing give detailed information about setting and testing of the distance relay.

Start signalling unit

The distance relay can be supplemented on request with a signalling unit type RXIED 1 for detection of start in phase R, S, T and neutral used for e.g. fault location equipment or sequential events recorder. The unit is shown mounted in the distance relay in Fig. 4, position reference 919.

INSTALLATION

The distance relay is designed for 19" rack mounting and for flush-mounting on a panel. The dimensions are shown on the enclosed dimension print 5283 0040-C. The entire rear of the relay should be accessible for inspection and possible future modifications of the connections.

EXTERNAL CONNECTIONS

The relay should always be connected to the external circuits according to the valid connection diagram. The general external connection diagram for single- and three-phase tripping is shown on page 35.

A miniature circuit-breaker should be used instead of fuses on the secondary side of the voltage transformers. This miniature circuit-breaker blocks the operation of the relay when a short circuit occurs on the secondary side of the voltage transformer. The miniature circuit-breaker should be installed in the immediate vicinity of the main voltage transformer in the switch yard so that it will operate for short circuits on as large part of the secondary network as possible.

COMMISSIONING AND MAINTENANCE

All modules except those for tripping and signalling are of static design. The maintenance has therefore been reduced to a minimum.

Separate instructions containing detailed information about settings and recommendations in connection with commissioning and testing of the relay are available. Since the relay in normal service only operates at very infrequent intervals, it will be of value to test it regularly, for example once a year or once every other year.

TECHNICAL DATA

The standard design of distance relay type RAZFE has the following data (other data can be obtained on request):

Rated frequency f	50 Hz or 60 Hz
Rated voltage U_n	(100-110 V) ± 10 %, 50 Hz (100-130 V) ± 10 %, 60 Hz
Rated current I_n	1 A, 2 A or 5 A
Maximum permissible continuous current	3 x rated current I_n
Maximum permissible current during 1 s	70 x rated current I_n
Minimum operating current	20 % of rated current I_n
Auxiliary voltage	110-125 or 220-250 V dc with tolerance range + 10 % and - 20 %
Tripping mode	Three-phase tripping or single- and three-phase tripping

Number of steps	Three directional impedance measuring steps
Time-settings for back-up steps	Step 2 0.1-1 sec. Step 3 0.3-3 sec.
Permissible ambient temperature range	0-55 °C
Insulation test voltage	2 kV, 50 Hz during 1 min.
Impulse test	5 kV, 1.2/50 µs, 0.5 joule
Surge wave test	2.5 kV, 1 MHz, decaying time: 3-6 periods
Reach step 1	$X1 = \frac{f}{I_n} \frac{c\ a}{p_1} \Omega$/phase f = rated frequency I_n = rated current a = 1, 2, 4, 8, 16, 32 p_1 = 50-100 c = 0.5 or 2
Reach step 2	$X2 = \frac{f}{I_n} \frac{c\ a}{p_2} \Omega$/phase p_2 = 10-100
Reach step 3	$X3 = \frac{f}{I_n} \frac{c\ a}{p_3} \Omega$/phase p_3 = 5-100
Reach in the resistive direction	$R_b = \frac{b}{I_n} \Omega$/phase b = 2, 4, 8, 16, 32, 40, 50
Line L/R-matching	τ_k = 6, 9, 18 ms τ_N = 4, 6, 9, 18 ms

Zero-sequence compensation factor	$K_N = 0.5, 0.6, \ldots 1.1$
	$K_N = \frac{X_0 - X_1}{3X_1}$
	X_0 = zero-sequence reactance
	X_1 = positive sequence reactance
Resetting ratio	102 %
Accuracy	± 5 % at step 1
Operating time (typical)	10-20 ms at 50 Hz, See Appendix RFF 2333 E
Resetting time	Measuring circuits: 25 ms Including the tripping circuit: 60 ms
Power consumption per phase at rated current and voltage	
current circuit	0.5 VA
voltage circuit	3 VA
dc circuit	80-100 W
Contact data for tripping relays	
Continuous current carrying capacity	6 A
Making capacity for 200 ms, inductive load L/R ≥ 10 ms	30 A
Breaking capacity ac 250 V P.F. ≥ 0.1	20 A
dc L/R ≤ 40 ms	
110 V	3 A
125 V	2.5 A
220 V	1 A
250 V	0.8 A

Contact data for signalling relays	
Continuous current carrying capacity	1 A
Making capacity for 200 ms, inductive load L/R ≥ 10 ms	10 A
Breaking capacity	
ac 250 V P.F. ≥ 0.1	1 A
dc L/R ≤ 40 ms	
110 V	0.4 A
220 V	0.2 A
Inputs and outputs	See the external connection diagram on page 35
Dimensions	See dimension print 5283 0040-C
Weight	Approximately 40 kg

ORDERING PARTICULARS

The following information is required when ordering:

- Rated frequency
- Rated voltage
- Rated current
- Auxiliary voltage (station battery voltage)
- Tripping mode:
  three-phase or single- and three-phase
- If test switch type RTXP 18 and test plug handle type RTXH 18 should be included
- If rear screw connection terminal strip is required for external connection of the distance relay
- If built-in power swing blocking relay is required

- If reclosing relay is required
- Particulars of the relaying scheme for co-operation with a distance relay at the remote end of the line, if applicable
- Signalling unit for start in phase R, S, T and neutral
- Any additional requirements

REFERENCE PUBLICATIONS

Modular system COMBIFLEX	Catalogue RK 92-10 E
Test system COMBITEST	Catalogue RK 92-11 E
Auxiliary relays	Catalogue RK 21-10 E
Time-lag relay type RXKB 1	Catalogue RK 31-14 E

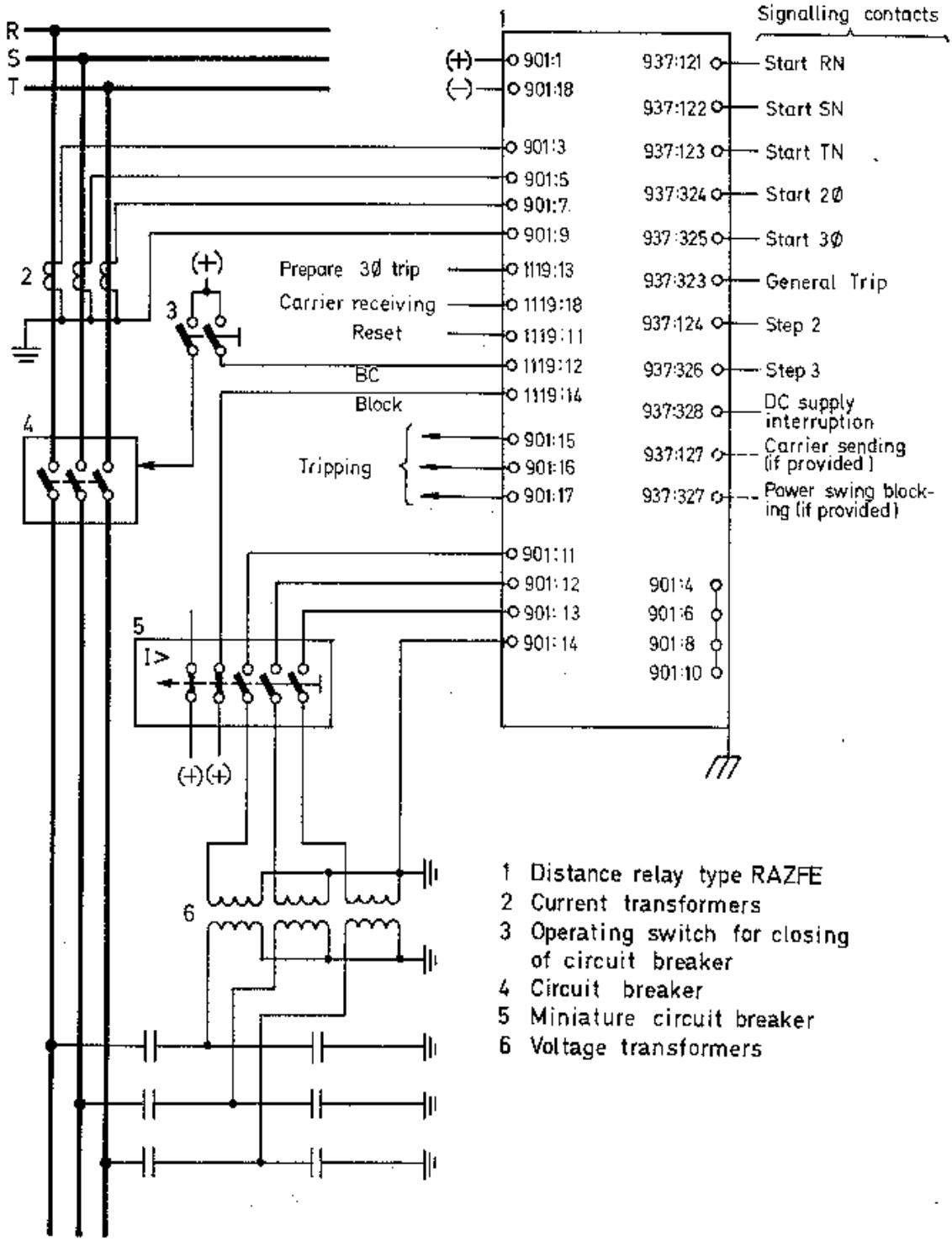

External connection diagram for distance relay type RAZFE.

ASEA	SINGLE-PHASE FAULT	RFF 2333 E
Department: RFF · Year: 75 · Week: 22		This document is based on licence drawing No · Sheet: 1
Design checked by · Accepted for prod. by · Drawing checked by · Drawn by: Bo		European projection · ✓ indicates R_0 in μm · Cont: 2

Time measurements were performed with a model Capacitive Voltage Transformer having the following data: Rated primary voltage: $380/\sqrt{3}$ kV
Intermediate voltage: $22/\sqrt{3}$ kV
Equivalent capacitance: 0.063 μF

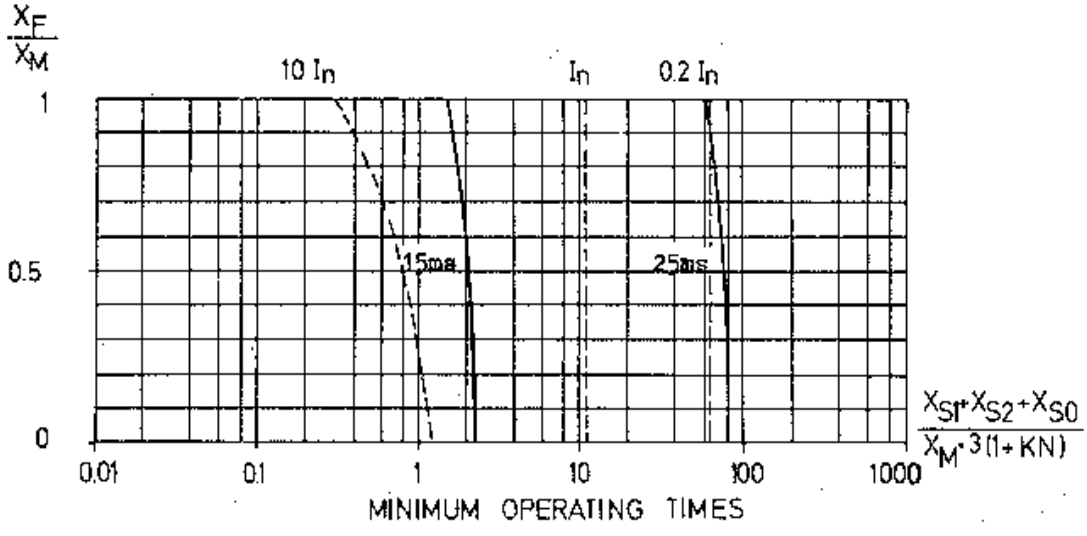

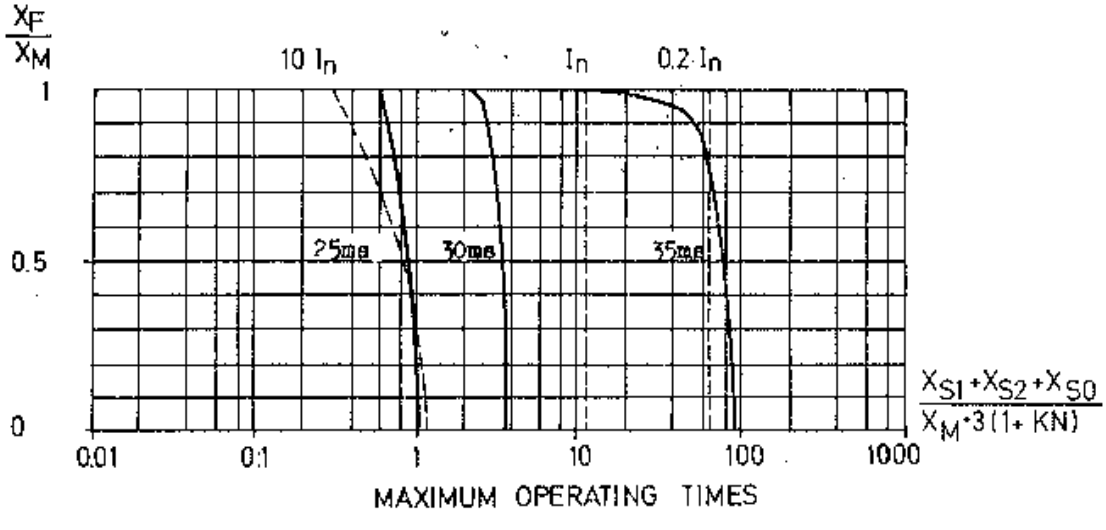

Test conditions: $f = 50$ Hz, $I_n = 1$ A, $K_N = 1$, $X_M = 2{,}5$ ohms,
$R_b = 8$ ohms, $\tau_N = \tau_k = 18$ ms ($\varphi = 80^\circ$)
X_S = Source reactance
X_F = Fault reactance
X_M = Set operating reactance

No	Revision	Year Wk	Dept	Appd

This document must not be copied without our written permission, and the contents thereof must not be imparted to a third party nor be used for any unauthorized purpose. Contravention will be prosecuted. ASEA

ASEA	TWO-PHASE FAULT	RFF 2333 E
Department: RFF · Year: 75 · Week: 22		This document is based on licence drawing No · Sheet 2
Design checked by · Accepted for prod. by · Drawing checked by · Drawn by: Bo		European projection · ✓ indicates R_a in µm · Cont 3

Time measurements were performed with a model Capacitive Voltage Transformer having the following data: Rated primary voltage: $380/\sqrt{3}$ kV
Intermediate voltage: $22/\sqrt{3}$ kV
Equivalent capacitance: 0.063 µF

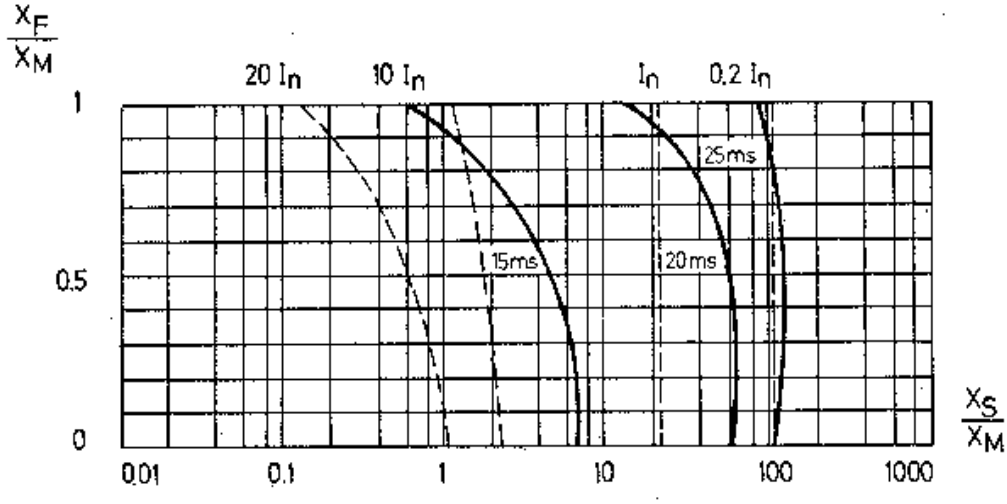

MINIMUM OPERATING TIMES

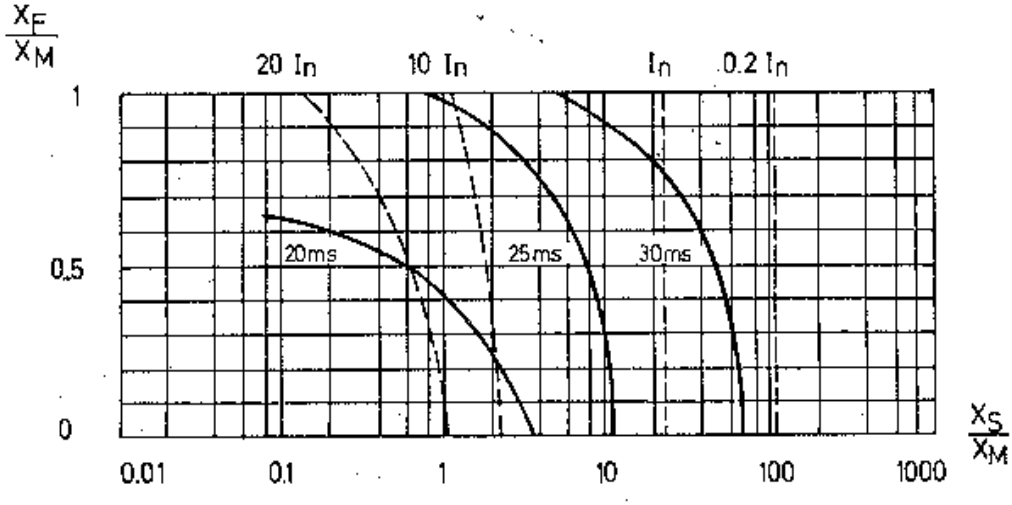

MAXIMUM OPERATING TIMES

Test conditions: $f = 50$ Hz, $I_n = 1$ A, $K_N = 1$, $X_M = 2{,}5$ ohms,
$R_b = 8$ ohms, $\tau_N = \tau_K = 18$ ms ($\varphi = 80^\circ$)
X_S = Source reactance
X_F = Fault reactance
X_M = Set operating reactance

No.	Revision	Year Wk	Dept	Appd
1	Page 3 added	76 20	RFR	Bo

This document must not be copied without our written permission, and the contents thereof must not be imported to a third party nor be used for any unauthorized purpose. Contravention will be prosecuted. ASEA

ASEA	THREE-PHASE FAULT	RFF 2333 E
Department: RFF · Year: 76 · Week: 20		This document is based on licence drawing No. · Sheet 3
Design checked by · Accepted for prod. by · Drawing checked by · Drawn by: Bo		European projection · ✓ indicates R_a in μm · Cont. –

Time measurements were performed with a model Capacitive Voltage Transformer having the following data: Rated primary voltage: $380/\sqrt{3}$ kV
Intermediate voltage: $22/\sqrt{3}$ kV
Equivalent capacitance: $0.063\,\mu F$

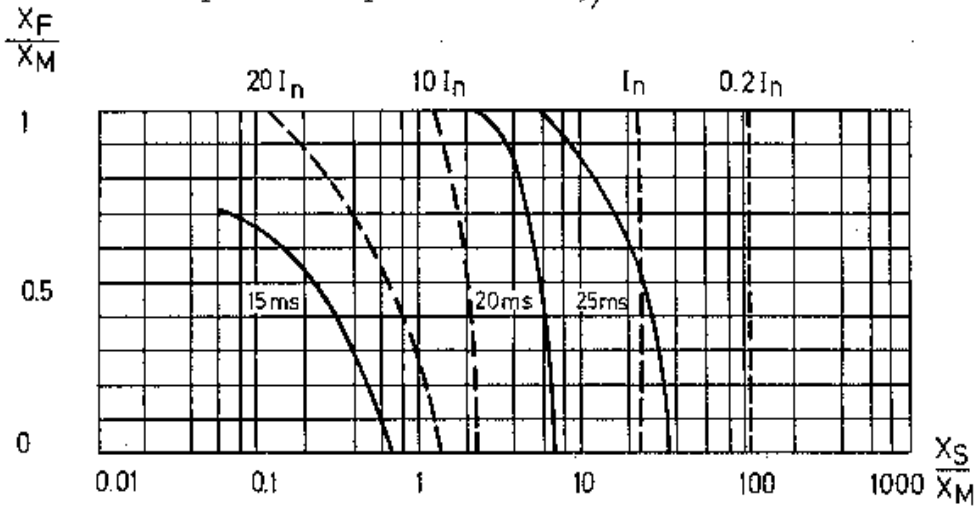

MINIMUM OPERATING TIMES

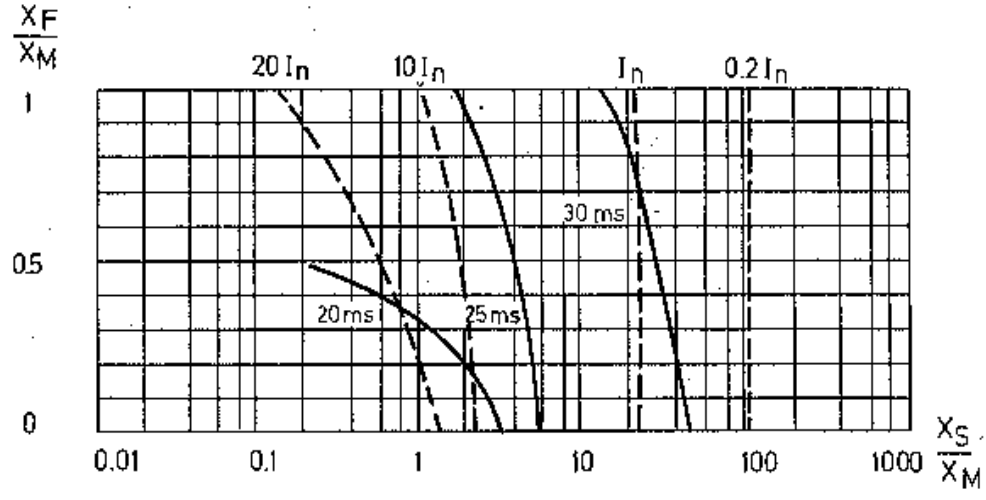

MAXIMUM OPERATING TIMES

Test conditions: f = 50 Hz, I_n = 1 A, K_N = 1, X_M = 2,5 ohms
R_b = 8 ohms, $\tau_N = \tau_k$ = 18 ms (φ = 80°)
X_S Source reactance
X_F = Fault reactance
X_M Set operating reactance

No.	Revision	Year Wk	Dept	Appd

This document must not be copied without our written permission, and the contents thereof must not be imparted to a third party nor be used for any unauthorized purpose. Contravention will be prosecuted. ASEA

ASEA	19" Ramverk 12S 19" Equipment frame size 12S	5283 0040-C
Tj.st. Dept: RKK		Prod. class / Reg. No. / Blad Sheet: 1
Ar Year: 71 / Vecka Week: 37		

Konstr. gr. Design ck'd	Prod. gr. Prod. ck'd	Ritn. gr. Drawg ck'd	Rit. Drawn	Ref.	Forts. Cont.
Ljungner		S Nilsson			–

Dimension
mm
(inches)

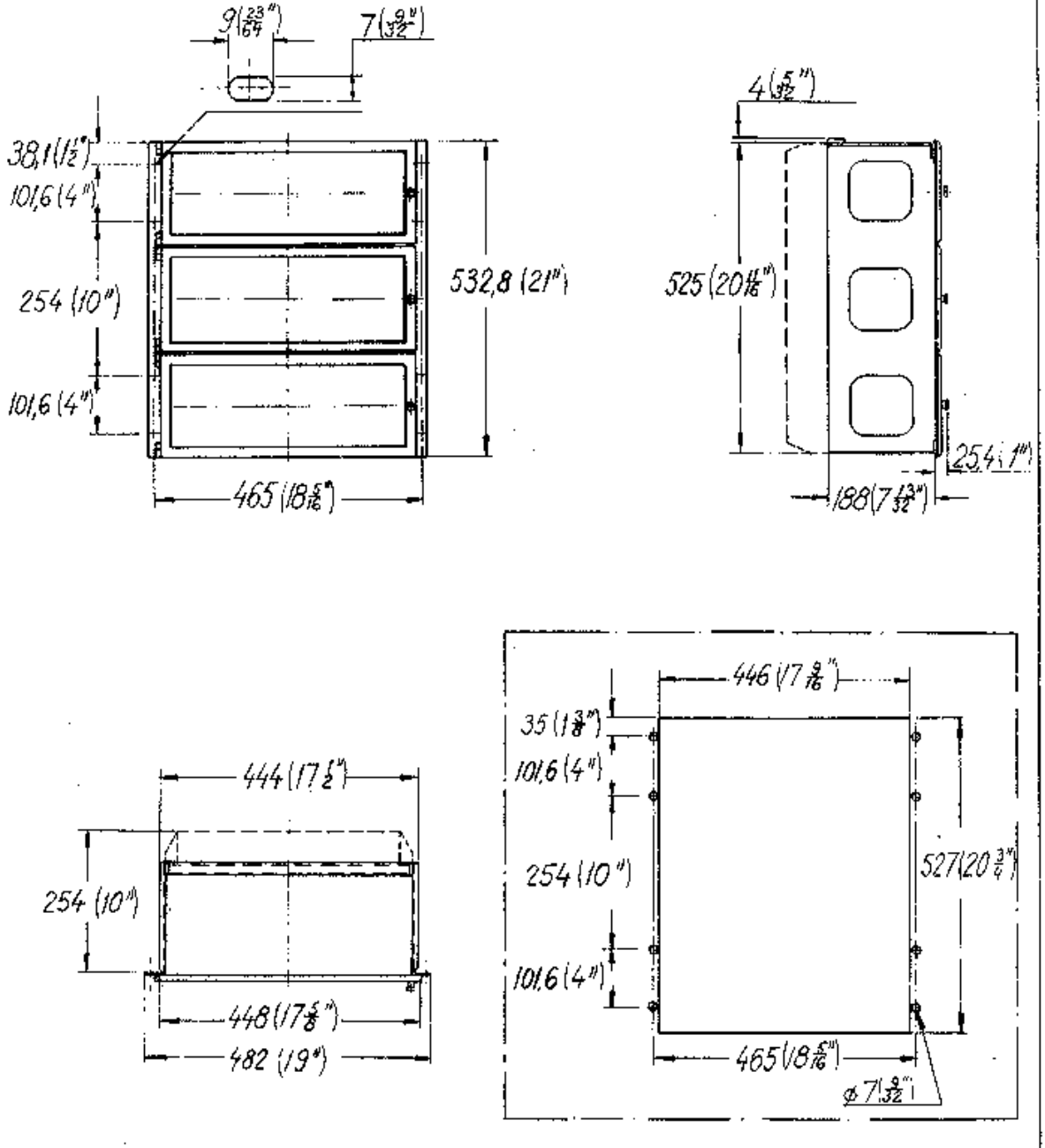

Nr No.	Ändring Revision	Ar Vecka Year Wk	Tj.st. Dept	Godk. Appd.
1	Equipment frame inf.	74.10	RKK	

Bildkort

This document must not be copied without our written permission, and the contents thereof must not be imported to a third party nor be used for any unauthorized purpose. Contravention will be prosecuted. ASEA

Denna handling får ej utan vårt medgivande kopieras. Den får ej heller delgivas annan eller eljest obehörigen användas. Överträdelse härav beivras med stöd av gällande lag. ASEA