ABB Drives

User's Manual
HTL Encoder Interface
FEN-31

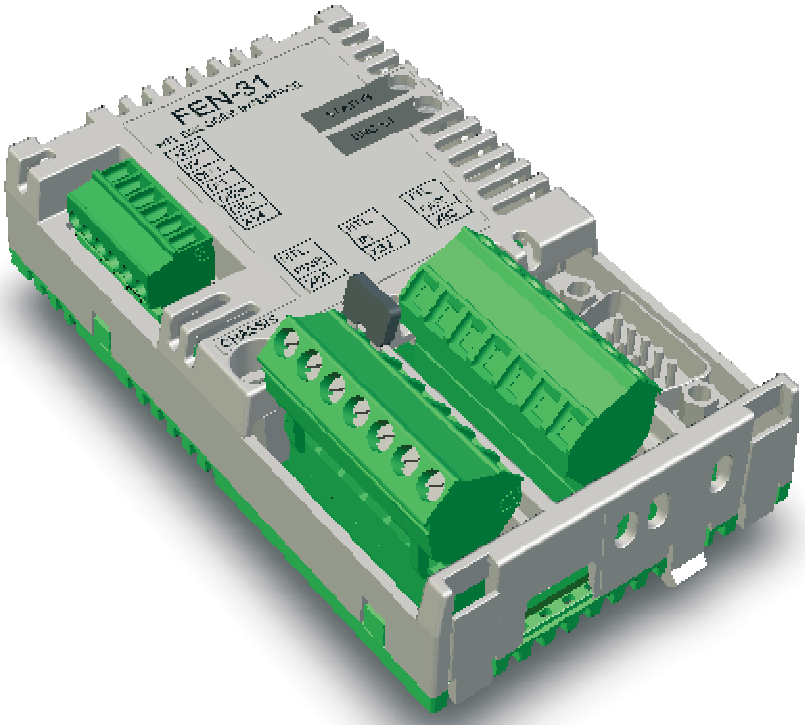

ABB

HTL Encoder Interface
FEN-31

User's Manual

3AUA0000031044 Rev B
EN
EFFECTIVE: 2010-04-06

© 2010 ABB Oy. All Rights Reserved.

Safety instructions

Overview

This chapter states the general safety instructions that must be followed when installing and operating the FEN-31 HTL Encoder Interface.

In addition to the safety instructions given below, read the complete safety instructions of the specific drive you are working on.

These warnings are intended for all who work on the drive. Ignoring the instructions can cause physical injury or death, or damage the equipment.

General safety instructions

WARNING! All electrical installation and maintenance work on the drive should be carried out by qualified electricians only.

The drive and adjoining equipment must be properly grounded.

Do not attempt any work on a powered drive. After switching off the mains, always allow the intermediate circuit capacitors 5 minutes to discharge before working on the frequency converter, the motor or the motor cable. It is good practice to check (with a voltage indicating instrument) that the drive is in fact discharged before beginning work.

The motor cable terminals of the drive are at a dangerously high voltage when mains power is applied, regardless of motor operation.

There can be dangerous voltages inside the drive from external control circuits even when the drive mains power is shut off. Exercise appropriate care when working on the unit.

Table of contents

Safety instructions ***5***

Overview 5
General safety instructions 5

Table of contents ***7***

Introduction ***9***

Intended audience 9
Before you start 9
What this manual contains 9

Overview ***11***

Overview 11
FEN-31 HTL Encoder Interface 11
Compatibility 13

Installation ***15***

Setting the supply voltage 15
Mounting 16
Terminal designations 17
Encoder wiring 19
Power consumption and cable length 28
Phasing 29
Programming 29

Fault tracing ***31***

Diagnostic LEDs 31
Cable fault diagnosis 31

Technical data 33

Further information 37

Product and service inquiries 37
Product training 37
Providing feedback on ABB Drives manuals 37
Document library on the Internet 37

Introduction

Intended audience

The manual is intended for the people who are responsible for commissioning and using the FEN-31 HTL Encoder Interface. The reader is expected to have basic knowledge of electrical fundamentals, electrical wiring practices and how to operate the drive.

Before you start

It is assumed that the drive is installed and the drive power supply is switched off before starting the installation of the extension module. Ensure that all dangerous voltages connected from external control circuits to the inputs and outputs of the drive are switched off.

In addition to conventional installation tools, have the drive manuals available during the installation as they contain important information not included in this manual. The drive manuals are referred to at various points of this document.

What this manual contains

This manual contains information on the wiring, configuration and use of the FEN-31 HTL Encoder Interface.

Safety instructions are featured in the first few pages of this manual.

Overview contains a short description of FEN-31.

Installation contains instructions for hardware settings, mounting and cabling.

Fault tracing explains the LED indications of FEN-31.

Technical data contains detailed technical information.

Overview

Overview

This chapter contains a short description of the FEN-31 HTL Encoder Interface.

FEN-31 HTL Encoder Interface

FEN-31 is an interface between the control board and an HTL encoder. It supports various types of HTL encoders. A PTC or KTY temperature sensor can be attached to one of the connections of the FEN-31 interface.

FEN-31 offers an RS-422-standard-compliant TTL encoder emulation output and two digital inputs. It also includes cable fault diagnostics for some HTL encoder types. See the drive *Firmware manual* for details.

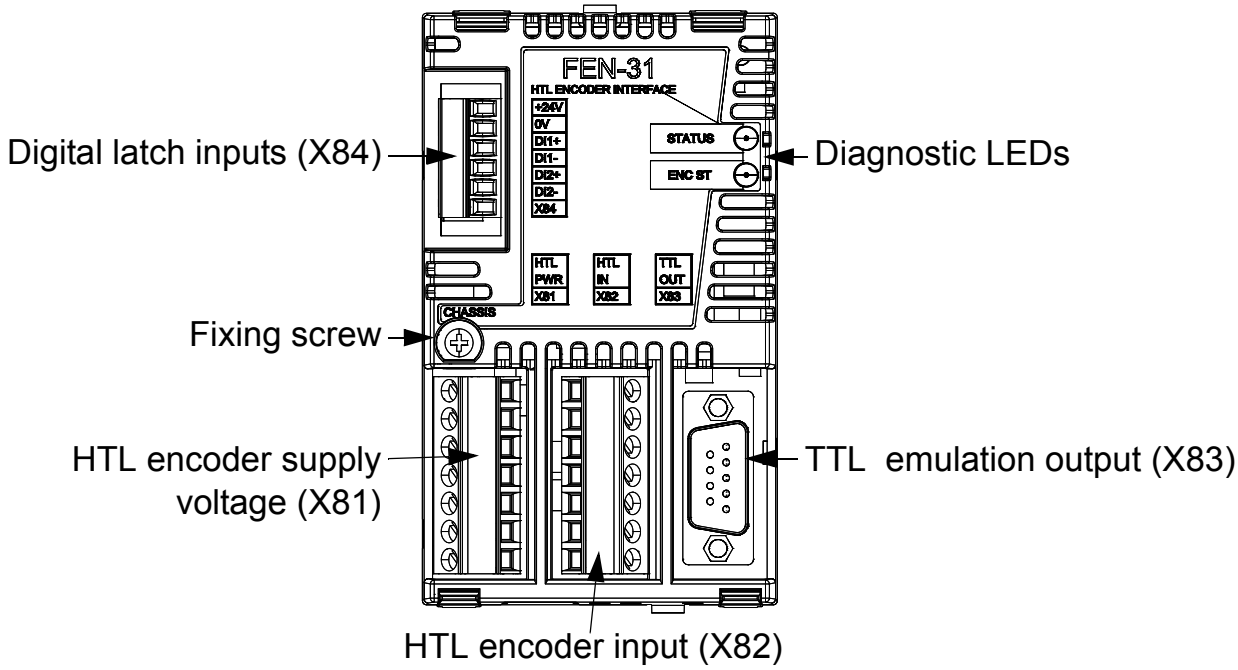

FEN-31 layout

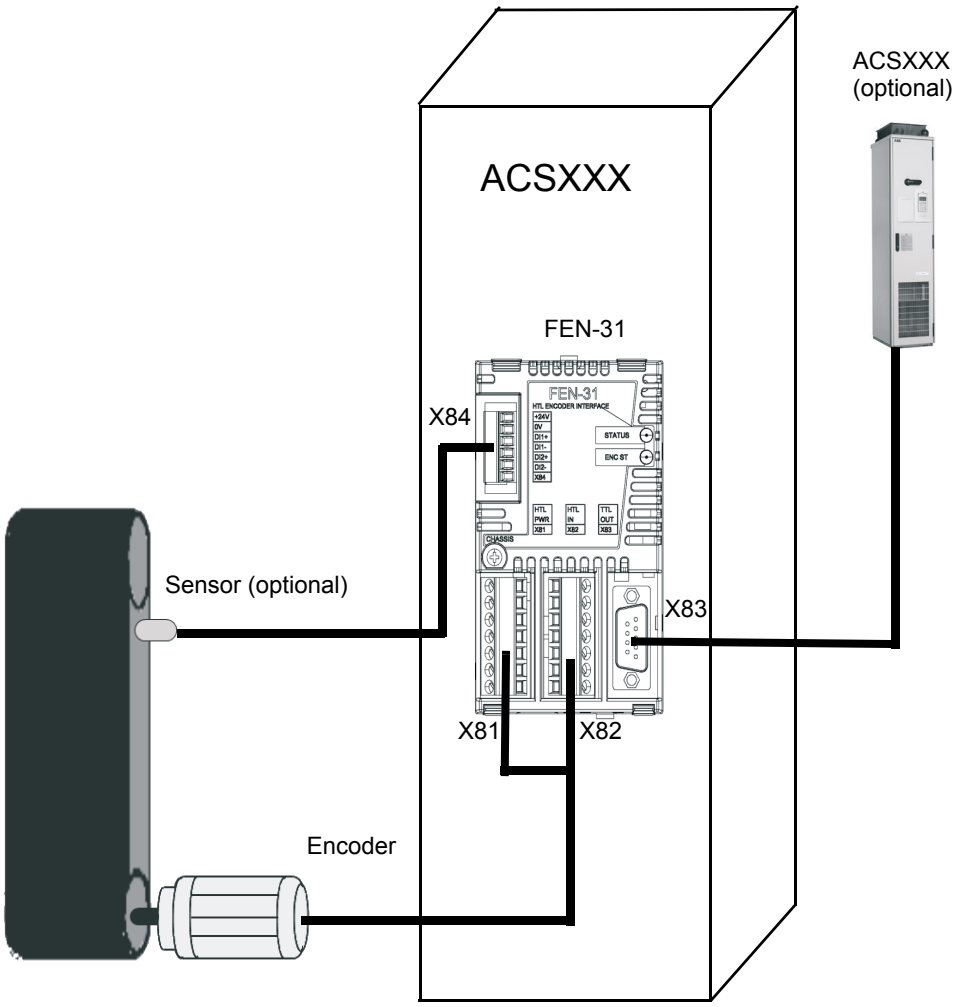

FEN-31 connections

Isolation areas

The following figure describes the different isolation areas of the module.

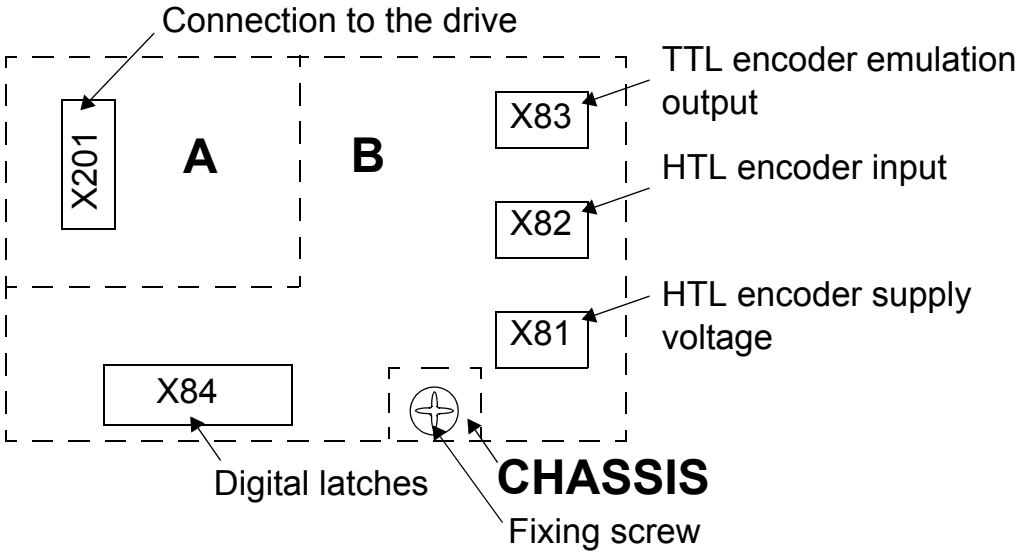

The shields of connectors X81 and X82 and plug X83 are connected to chassis. The fixing screw connects the chassis to ground.

Compatibility

FEN-31 is compatible with the following encoders:

- Differential push-pull HTL encoders
- Single-ended push-pull HTL encoders
- Open collector HTL encoders
- Open emitter HTL encoders

Installation

WARNING! Follow the safety instructions given in this guide and in the drive *Hardware manual*.

Setting the supply voltage

WARNING! Selecting the wrong supply voltage may damage or break the encoder.

Two supply voltages are available on pins 4 and 5 in connector X81. Only one of them can be used to supply an encoder. The supply voltage is selected by placing a jumper on connector X81 as described in the figure below. The following supply voltages can be selected:

- +15 V DC ± 20% 200mA (max.)
- +24 V DC ± 20% 200mA (max.)

You can also connect an external 10 - 24 V DC power supply to pins 4 and 5 in connector X81. In that case, the jumper must be removed.

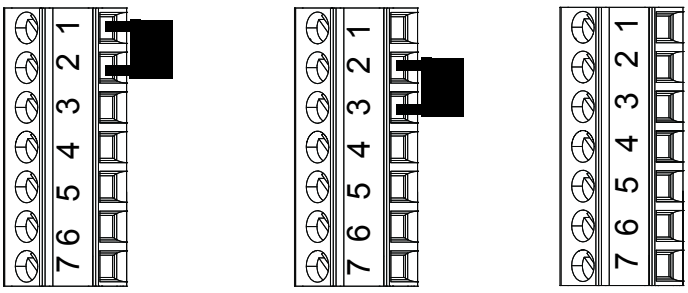

+15 V + 24 V External supply

Encoder supply voltage available on pins X81-4 and X81-5 with different jumper settings

Mounting

WARNING! Before installation, switch off the drive power supply. Wait for five minutes to ensure that the capacitor bank of the drive is discharged. Switch off all dangerous voltages connected from external control circuits to the inputs and outputs of the drive.

Note: Before mounting the module, set the supply voltage jumpers as described above.

FEN-31 is inserted into the option slot of the drive. See the drive *Hardware manual* for more information.

The module is held in place with plastic retaining clips and one screw. The screw also provides the earthing of the cable shields connected to the module and interconnects the GND signals of the module and the drive.

On installation of the module, the signal and power connection to the drive is automatically made through a 20-pin connector.

Mounting procedure:

- Insert the module carefully into the option slot until the retaining clips lock the module into position.
- Fasten the screw (included) to the stand-off.

Note: Correct installation of the screw is essential for fulfilling the EMC requirements and for proper operation of the module.

Terminal designations

Abbreviations

AI	Analog input
DI	Digital in
DO	Digital out
PO	Power out

HTL supply voltage pin order (X81)

Pin	Name	Direction	Description
1	+15V_B	PO	Supply voltage
2	VCC / external supply	PO	Encoder supply voltage
3	+24V_B	PO	Supply voltage
4	VCC / external supply	PO	Encoder supply voltage
5	COM_B	-	0V, Common. Used for supply voltage 0 V and temperature sensor 0 V (PTC/KTY_0V).
6	PTC/KTY-84	AI	Temperature sensor (non-isolated)
7	GND	-	Shield

HTL input pin order (X82)

Pin	Name	Direction	Description
1	A+	DI	A channel
2	A-	DI	A channel - inverted
3	B+	DI	B channel
4	B-	DI	B channel - inverted
5	Z+	DI	Marker pulse
6	Z-	DI	Marker pulse - inverted
7	GND	-	Shield

TTL encoder emulation output pin order (X83)

Pin	Name	Direction	Description
1	EM_A+	DO	Channel A+
2	EM_B+	DO	Channel B+
3	EM_Z+	DO	Channel Z+
4	COM_B		0V, Common
5	NC		Not connected
6	EM_A-		Channel A-
7	EM_B-		Channel B-
8	EM_Z-		Channel Z-
9	COM_B		0V, Common
-	Shield		Chassis

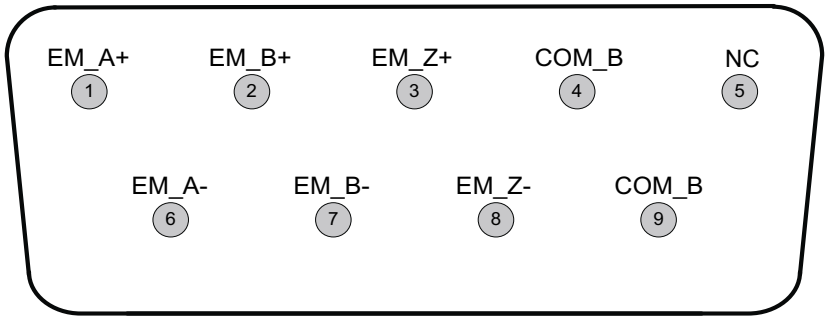

TTL encoder emulation output (X83) pin order

Digital latch input pin order (X84)

Pin	Name	Direction	Description
1	+24V_B	PO	Supply voltage
2	COM_B		Common
3	DI_1+	DI	Latch signal 1
4	DI_1-		Latch signal 1 return
5	DI_2+	DI	Latch signal 2
6	DI_2-		Latch signal 2 return

Encoder wiring

The allocation of cable pairs for each encoder type is described in this section. The encoders should be connected to FEN-31 with a shielded instrumentation cable, preferably with twisted pairs. See also the encoder manual for additional requirements. To prevent the encoder inputs from being disturbed the cable shield must be connected to the chassis.

Note: Do not route the encoder cables parallel to power (eg, motor) cables.

Wiring for differential push-pull HTL encoder

Cable pair number	Signals name	Connector plug and pin number
1	A+	X82-1
	A-	X82-2
2	B+	X82-3
	B-	X82-4
3	Z+	X82-5
	Z-	X82-6
4	VCC	X81-4
	COM_B	X81-5

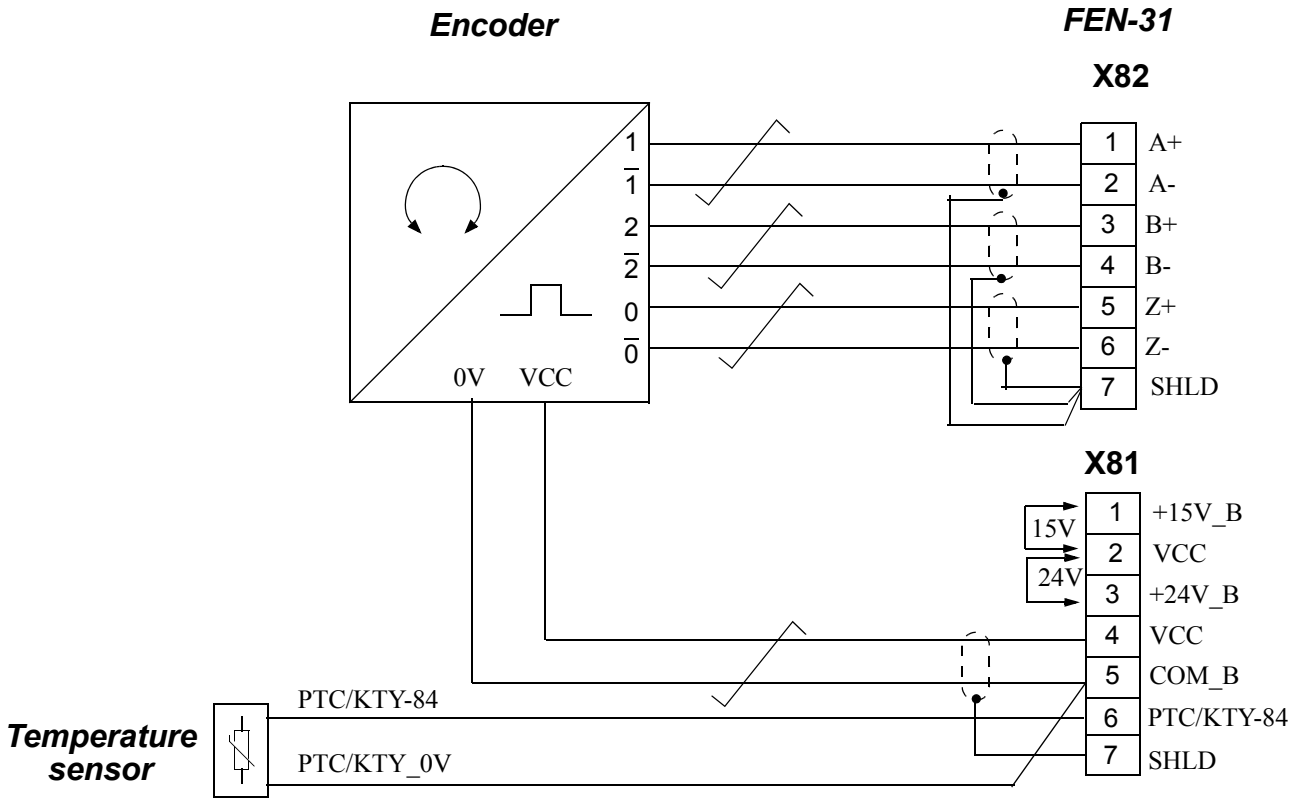

Wiring diagram for differential push-pull HTL encoder

Wiring for single-ended push-pull HTL encoder

Signals name	Connector plug and pin number
A+	X82-1
B+	X82-3
Z+	X82-5
VCC	X81-4
COM_B	X81-5

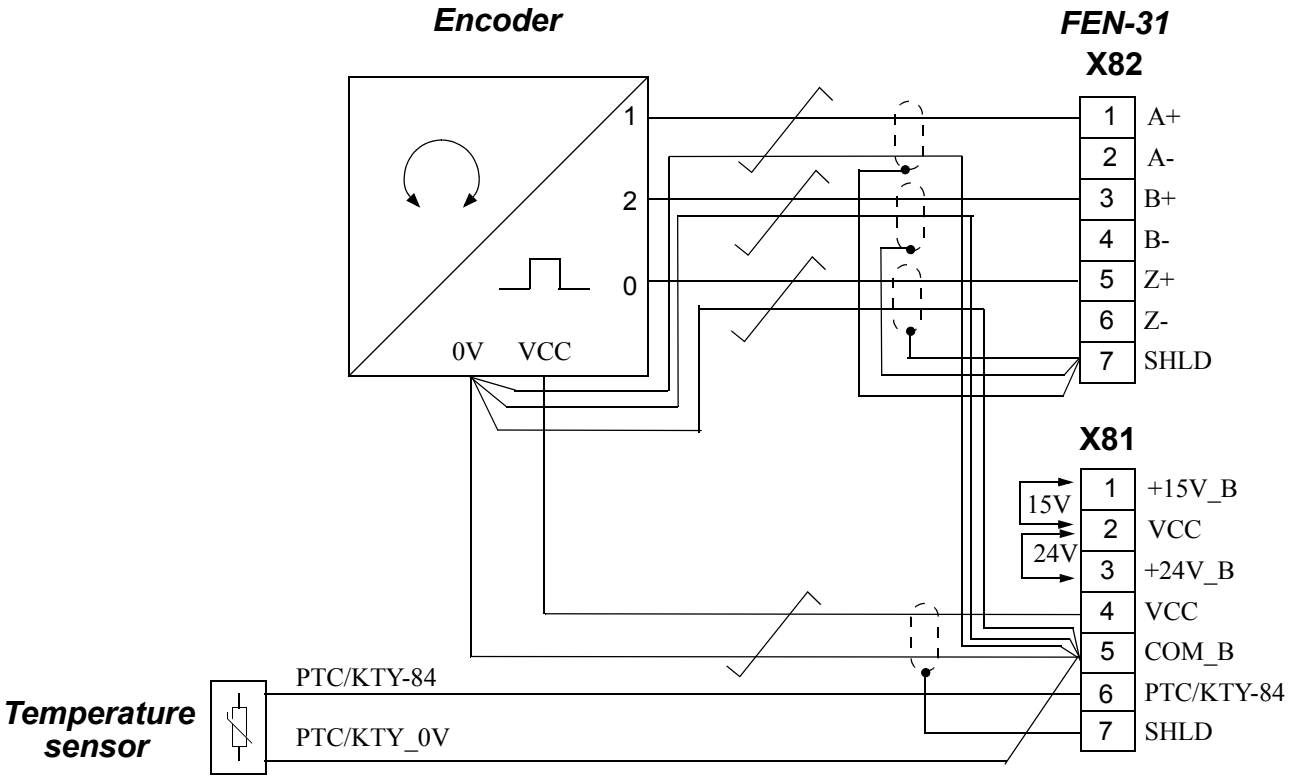

Wiring diagram for single-ended push-pull HTL encoder

Wiring for single-ended open collector HTL encoder and single-ended open emitter HTL encoder

Signals name	Connector plug and pin number
A+	X82-1
B+	X82-3
Z+	X82-5
VCC	X81-4
COM_B	X81-5

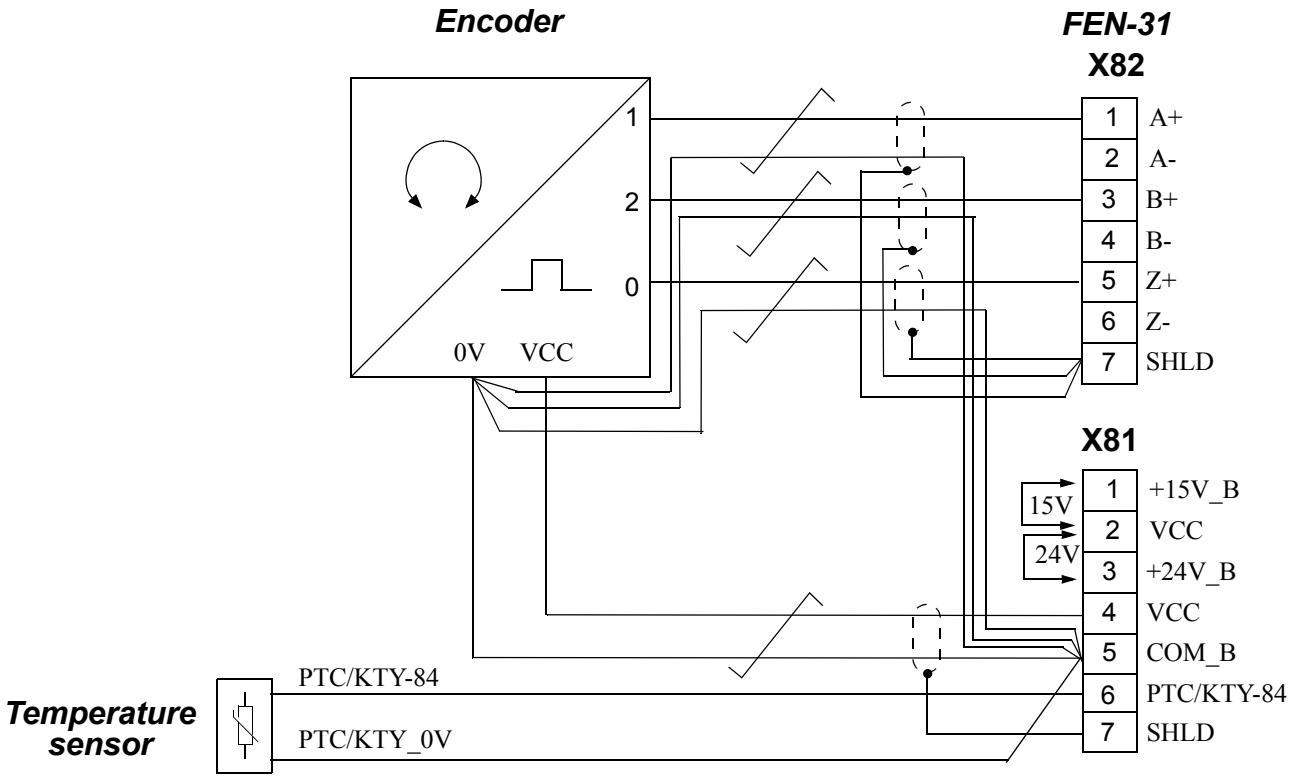

Wiring diagram for single-ended open collector / open emitter HTL encoder

To use single-ended open collector and open emitter HTL encoders, the interface unit needs to have pull-up resistors configured.

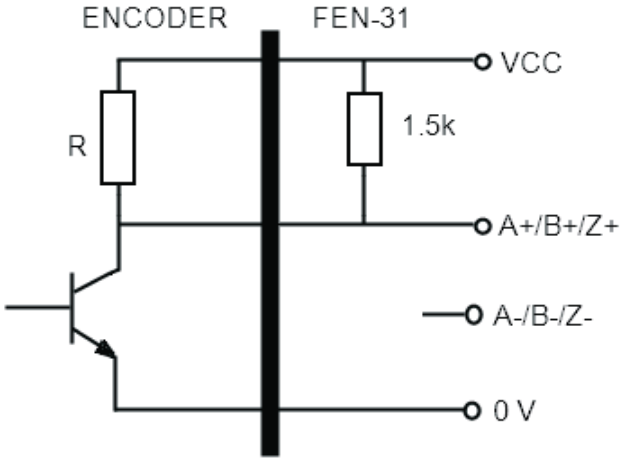

Resistor configuration for open collector HTL encoder

For open collector HTL encoder, the OUT+ channel (A+/B+/Z+) is actively driven low when the transistor closes the circuit. When the transistor opens the circuits, the signal line is passively pulled high by the 1.5 kilo-ohm load resistor in FEN-31.

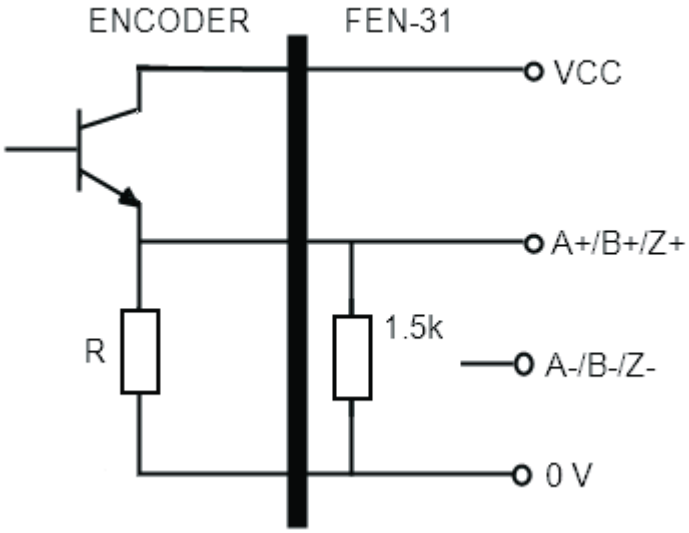

Resistor configuration for open emitter HTL encoder

For open emitter HTL encoder, the OUT+ channel (A+/B+/Z+) is actively driven high when the transistor closes the circuit. When the transistor opens the circuits, the signal line is passively pulled low by the 1.5 kilo-ohm load resistor in FEN-31.

Configuring the internal pull-up resistor dip switches

In FEN-31, a 1.55 kΩ resistor is connected to each signal line (A+, B+, Z+) from one end and the other end is, by default, floating. These floating ends can be connected via DIP switches between connectors X81 and X82.

DIP switches 1, 2, and 3 connect the floating ends of the resistors. Switch 4 selects whether the resistor ends (connected together) are further connected to 0V or VCC (ground or supply voltage).

Note: To access the DIP switches, the FEN-31 cover has to be removed.

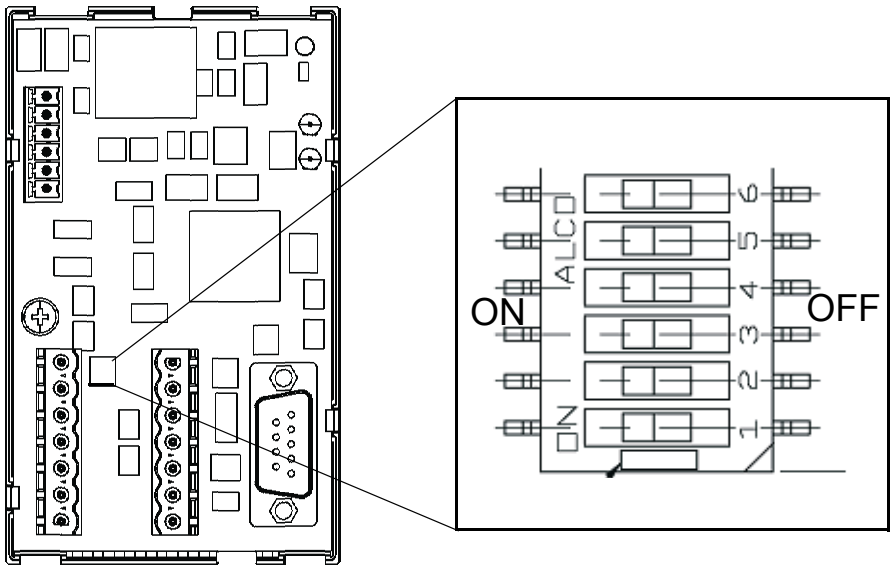

DIP switches located under the cover

Note: The DIP switches are OFF by default. Turn them ON only if an encoder that specifically needs a pull-up or pull-down resistor is used.

The configuration of the DIP switches is shown in the table below:

Encoder type	1	2	3	4	Resistors connected	Notes
Differential push-pull	off	off	off	off	no	Default setting
Single-ended push-pull	off	off	off	off	no	Default setting
Open collector (sinking)	on	on	on	off	yes	Resistors pull up (A+, B+, Z+)
Open emitter	on	on	on	on	yes	Resistors pull down (A+, B+, Z+)

TTL emulation output wiring

Cable pair number	Signals name	X83 connecting plug pin number (9-pin)
1	EM_A+	1
	EM_A-	6
2	EM_B+	2
	EM_B-	7
3	EM_Z+	3
	EM_Z-	8
4	COM_B	4
	COM_B	9

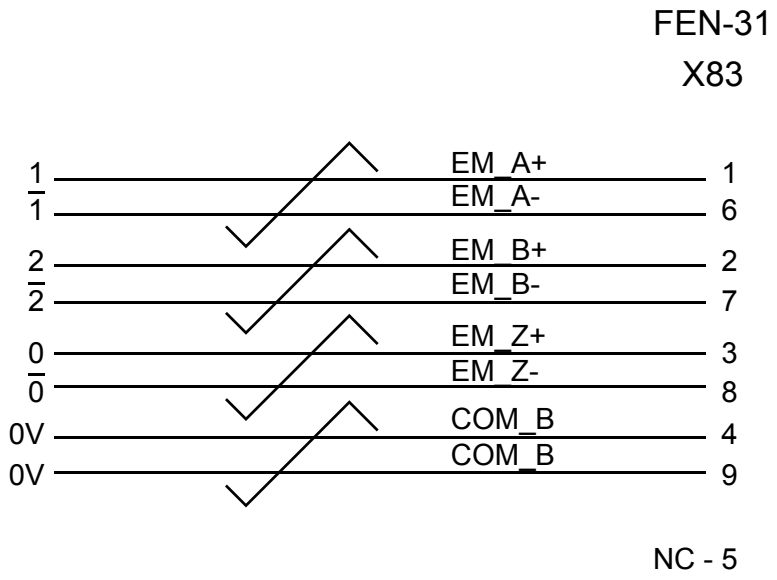

Wiring diagram for TTL emulation output

Position latch digital input wiring

Cable pair number	Signals name	X84 connecting header pin number (6-pins)
1	+24V_B	1
	COM_B	2
2	DI_1+	3
	DI_1-	4
3	DI_2+	5
	DI_2-	6

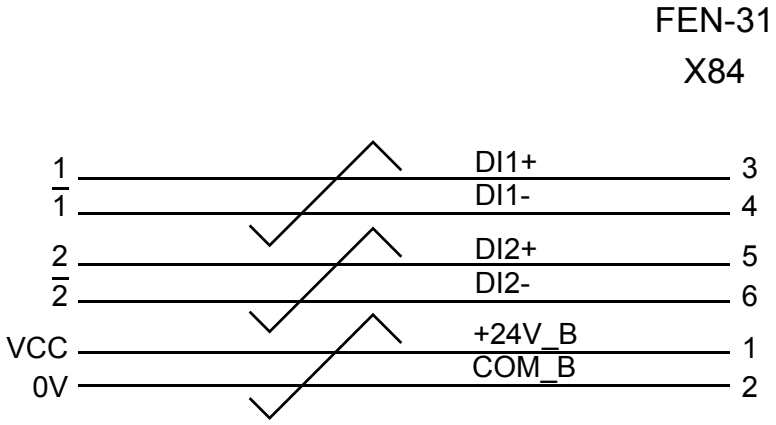

Wiring diagram for position latch digital input

Power consumption and cable length

The power consumption of the module depends on many factors, eg, max. speed of the motor, encoder pulse number per revolution, encoder cable length and leakage capacitance. The following figure shows the approximate power consumption of an encoder with differential outputs, based on actual measurements.

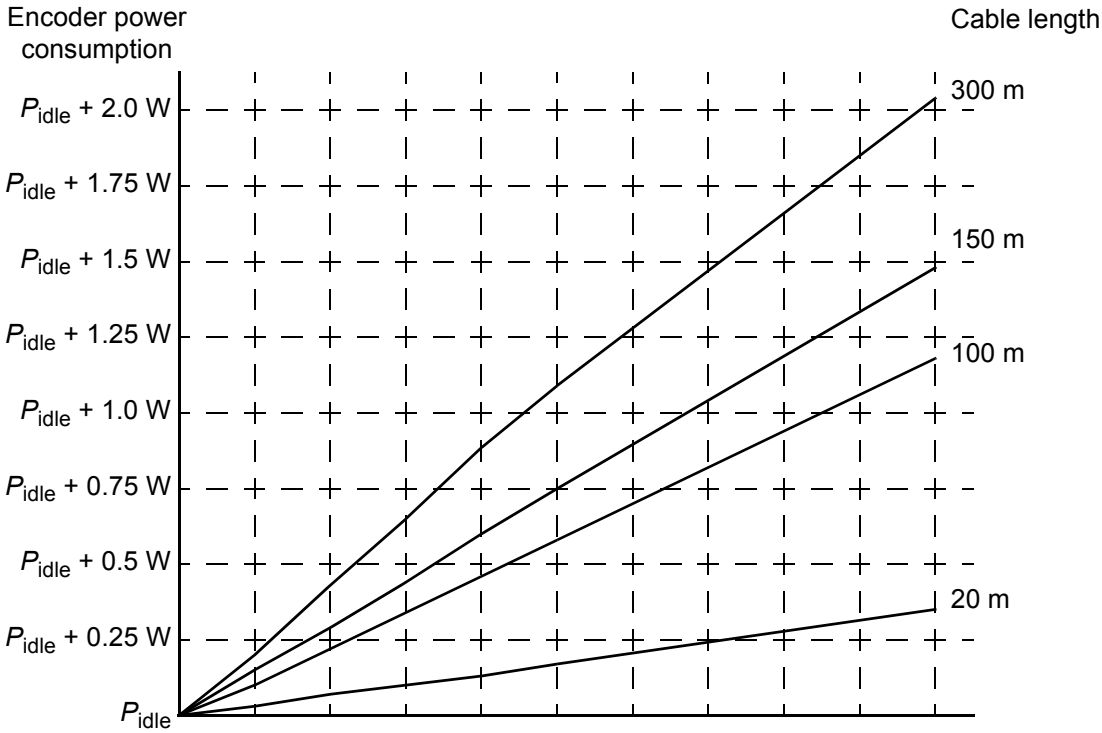

EPN = 1024 ppr:	0	300	600	900	1200	1500	1800	2100	2400	2700	3000
EPN = 2048 ppr:	0	150	300	450	600	750	900	1050	1200	1350	1500
EPN = 512 ppr:	0	600	1200	1800	2400	3000	3600	4200	4800	5400	6000

Motor speed (rpm)

EPN = Encoder pulse number
P_{idle} = Encoder power consumption when idle. See encoder documentation.

Approximate power consumption of an encoder for four different cable lengths.

Phasing

When the encoder is connected correctly, running the drive in the *Forward* (positive speed reference) direction should produce a positive encoder speed feedback.

On incremental encoders, the two output channels, usually marked 1 and 2 or A and B, are 90° (electrical) apart from each other. When rotated clockwise, most encoders – but not all – have channel 1 leading channel 2 as illustrated below. Determine the leading channel by referring to the encoder documentation or by measuring with an oscilloscope.

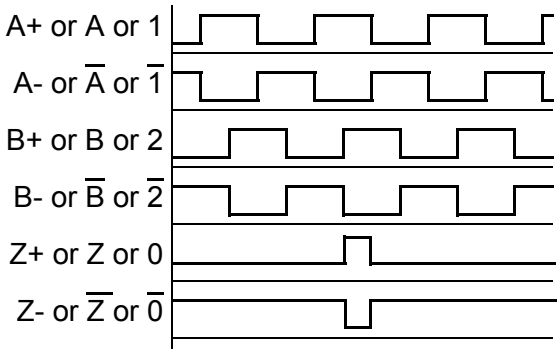

The encoder output channel that leads when the drive runs *Forward* should be connected to FEN-31 input A, the output channel that trails to FEN-31 input B.

The zero reference output channel (usually marked 0, N or Z) needs to be connected in positioning applications only.

Programming

FEN-31 is programmed through drive parameters. These parameters must be checked and adjusted according to the encoder data sheet. For further information, see the drive *Firmware manual*.

Fault tracing

Diagnostic LEDs

FEN-31 is equipped with two diagnostic LEDs. The STATUS LED describes the status of FEN-31 and the ENC ST LED the status of the encoders. Description of the LED signals is presented below.

	Colour	Description
STATUS LED	Green	OK
	Orange	Not initialized or communication fault to control unit
	Red	Not in use
ENC ST LED	Green	Encoder OK
	Orange	Encoder fault

Cable fault diagnosis

Cable fault diagnostics are implemented for the HTL encoder input. The cable fault diagnostics function samples voltage on each of the six signal connections to detect a missing signal wire connection.

For details about HTL encoders supported by the cable fault diagnostics function, see the drive *Firmware manual*.

Technical data

Dimensions:

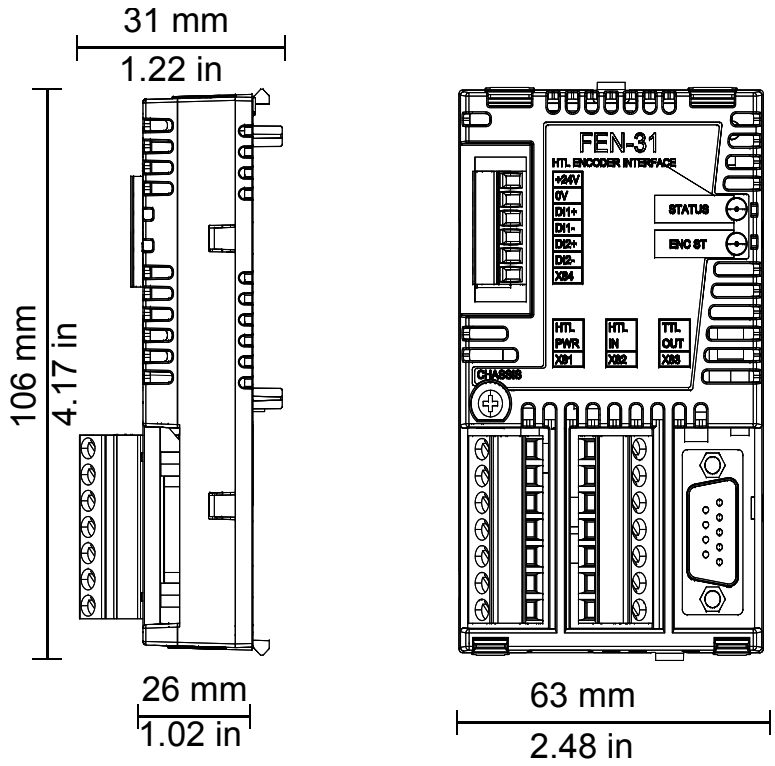

General

- Max. power consumption: 350 mA at 24 V (Max. combined power consumption of encoders, latches and cabling 5W)
- Degree of protection: IP20
- Ambient conditions: The applicable ambient conditions specified for the drive in its *Hardware manual* are in effect.

Connectors:

- 20-pin socket
- 2 x 7-pin detachable plugs, max 2.5 mm^2 wire, tightening torque 0.5 N·m (5 lbf·in)

- 9-pin D-Sub
- 6-pin detachable plug, max 1.5 mm^2 wire, tightening torque 0.3 N·m (3 lbf·in)

HTL encoder input (X81 & X82)

- Supply voltages:
  - +15 V DC ± 20% 200mA (max.) - HTL encoders
  - +24 V DC ± 20% 200mA (max.) -HTL encoders
  - External power supply, if connected, has to be in the range of 10-24 V DC
- Channels A, B, and Z supported
  - Signal frequencies up to 300kHz can be detected by the HTL encoder input.
  - With long cables and/or single-ended encoders it may be difficult to convey high signal frequencies reliably.
  - Signal levels: “0” < 3.5 V and “1” > 7.5 V
- Supported encoder types:
  - Differential Push-Pull HTL encoders, supply voltage 10 - 24 V
  - Single-ended Push-Pull HTL encoders, supply voltage 15 - 24 V
  - Open collector HTL encoders, supply voltage 15 - 24 V
  - Open emitter HTL encoders, supply voltage 15 - 24 V
- Supported cable lengths:
  - 300 m for differential push-pull HTL encoders
  - 200 m for single-ended push-pull HTL encoders
  - 100 m for open collector / open emitter HTL encoders
- Performance:
  - Speed range: -32768…32767 rpm
  - Speed resolution: 0.04 RPM (24 bits)
  - Position resolution: 16 M / rev (24 bits)
  - Position accuracy: 4x pulse count / rev
- Isolated together with digital inputs

TTL encoder emulation output (X83)

- Supports emulation of TTL incremental encoder, 1…65535 pulses / rev, reference mark
- CH A, CH B, CH Z: RS-422/485, 500 kHz (max)
- Maximum cable length: 100 m
- Performance
  - Speed range: -32768...32767 rpm
  - Position resolution: 4x pulse count / rev
- Electrically isolated from the HTL input and control board

Digital inputs for position latch (X84)

- Output voltage: +24 V DC ±15%, short-circuit proof
- Signal levels: < 5 V = 0, > 15 V = 1
- Isolated together with TTL encoder input

Further information

Product and service inquiries

Address any inquiries about the product to your local ABB representative, quoting the type designation and serial number of the unit in question. A listing of ABB sales, support and service contacts can be found by navigating to www.abb.com/drives and selecting *Sales, Support and Service network*.

Product training

For information on ABB product training, navigate to www.abb.com/drives and select *Training courses*.

Providing feedback on ABB Drives manuals

Your comments on our manuals are welcome. Go to www.abb.com/drives and select *Document Library – Manuals feedback form (LV AC drives)*.

Document library on the Internet

You can find manuals and other product documents in PDF format on the Internet. Go to www.abb.com/drives and select *Document Library*. You can browse the library or enter selection criteria, for example a document code, in the search field.

3AUA0000031044 Rev B EN
EFFECTIVE: 2010-04-06

ABB Oy
Drives
P.O. Box 184
FI-00381 HELSINKI
FINLAND
Telephone +358 10 22 11
Fax +358 10 22 22681
www.abb.com/drives

ABB Inc.
Automation Technologies
Drives & Motors
16250 West Glendale Drive
New Berlin, WI 53151 USA
Telephone 262 785-3200
1-800-HELP-365
Fax 262 780-5135
www.abb.com/drives

ABB Beijing Drive Systems Co. Ltd.
No. 1, Block D,
A-10 Jiuxianqiao Beilu
Chaoyang District
Beijing, P.R. China, 100015
Telephone +86 10 5821 7788
Fax +86 10 5821 7618
www.abb.com/drives