Descriptive Bulletin
41-765M

June 1999

Generator Protection Unit 2000R

GPU™ 2000R

Note: 589V/589W Series Shown

Application

The GPU2000R is a Generator Protection Unit in the proven line of 2000R series relays.

The 589T series is designed to provide primary and/or backup protection for small to medium size generators, and the 589V/589W series are suitable for synchronous generators of any size.

Utilizing three advanced microprocessors, the GPU2000R provides multifunction protection, expansive fault and operations records, detailed metering, programmable inputs and outputs, and advanced communications options.

These new series units also provide improved performance compared to the earlier 589R series: The sensitivity of the reverse power anti-motoring element is now down to 0.2% of rated machine power; the loss-of-excitation function is now accomplished by a mho-circle impedance element.

Features

- Complete Multifunction Protection
- Programmable logic inputs (8) and outputs (6)
- A 4-line by 20-character liquid crystal display provides easy access to metering, records, testing and settings
- Electrically Isolated Communication Ports provide superior remote communications
- Simultaneous communication through front and rear ports via dedicated microprocessors
- Continuous self-diagnostics
- Machine Running Timers and Alarms
- Flash memory technology provides for quick and easy updating to latest software enhancements.

Protective Functions

589T Series

• Under and Overvoltage	27/59
• Reverse Power	32R
• Loss of Excitation	40
• Phase Unbalance	46
• Voltage - restrained or controlled overcurrent	51V
• Backup Phase Overcurrent	50/51
• Ground Overcurrent	51G/50G
• Directional Phase and Ground Overcurrent	67/67N
• Under and Overfrequency	81U/81O

The 589V Series adds:

• 100% Stator Ground	27G/59G
• Machine Differential	87
• Volts per Hertz	24
• Synchronism Check	25
• Inadvertent Energization	50IE

The 589W Series adds:

• Distance Back-up	21

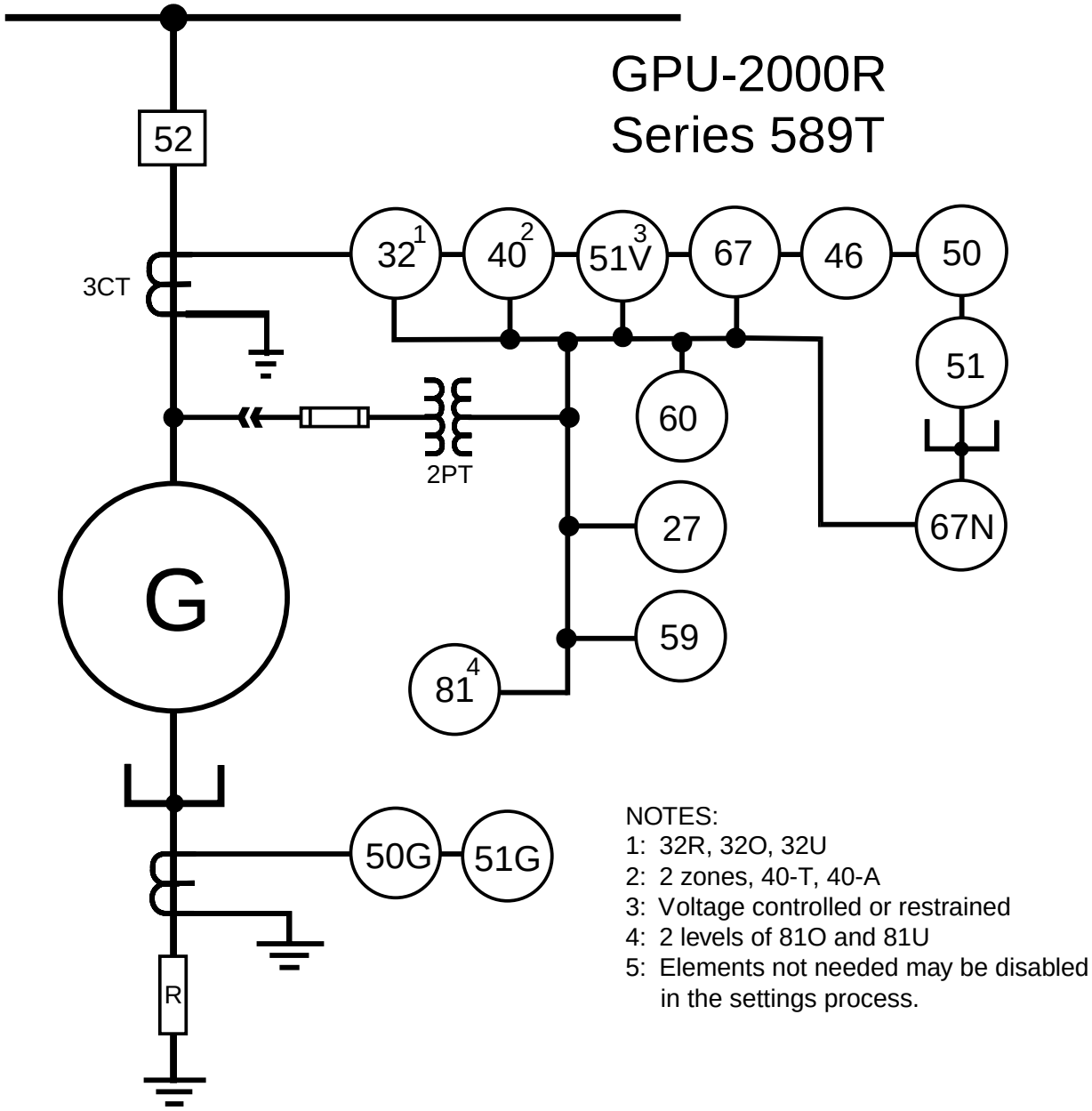

Figure 1. Protective Elements Included in Series 589T Units

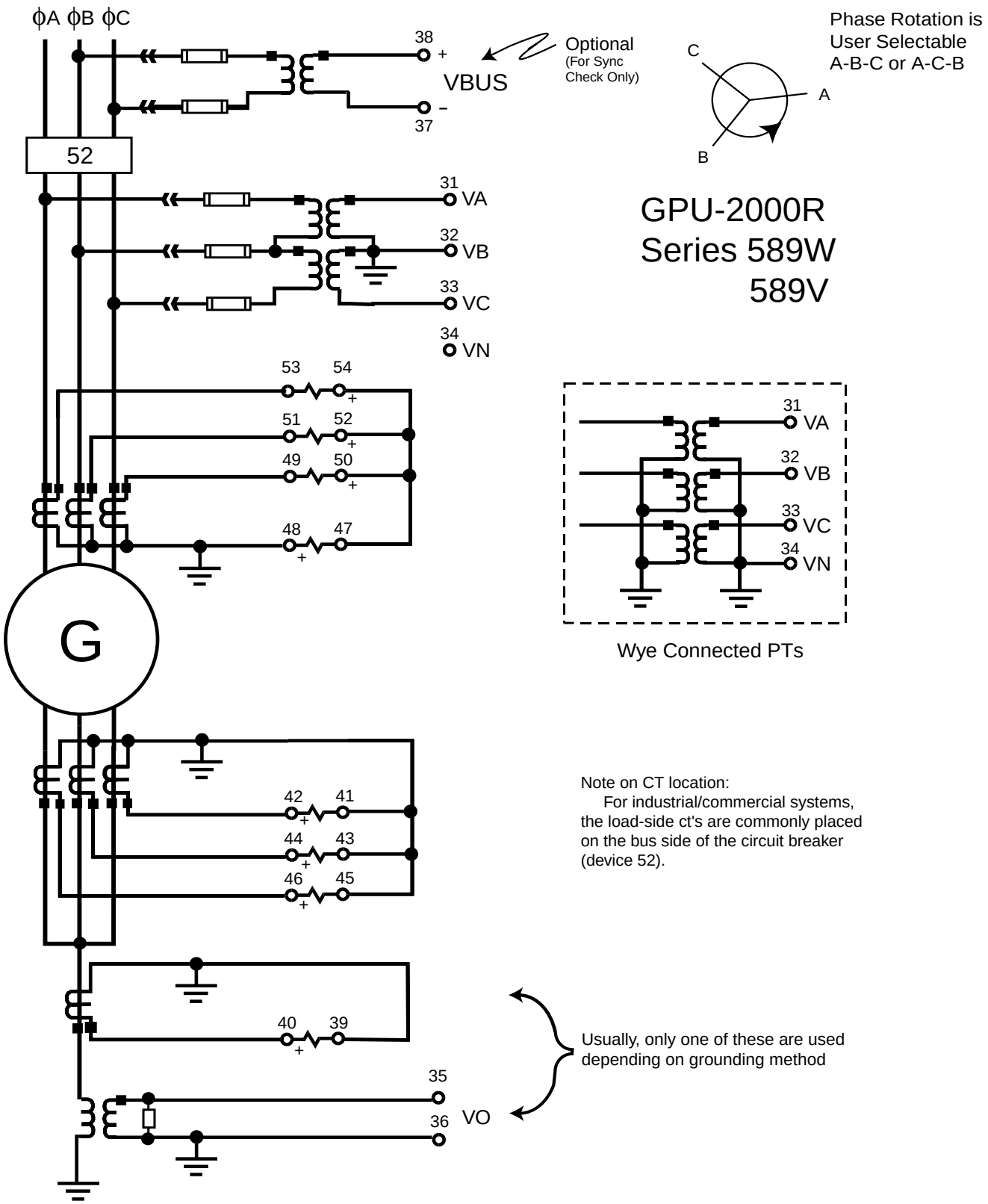

Figure 2. Typical Connections, 589T Series Units

589W589V

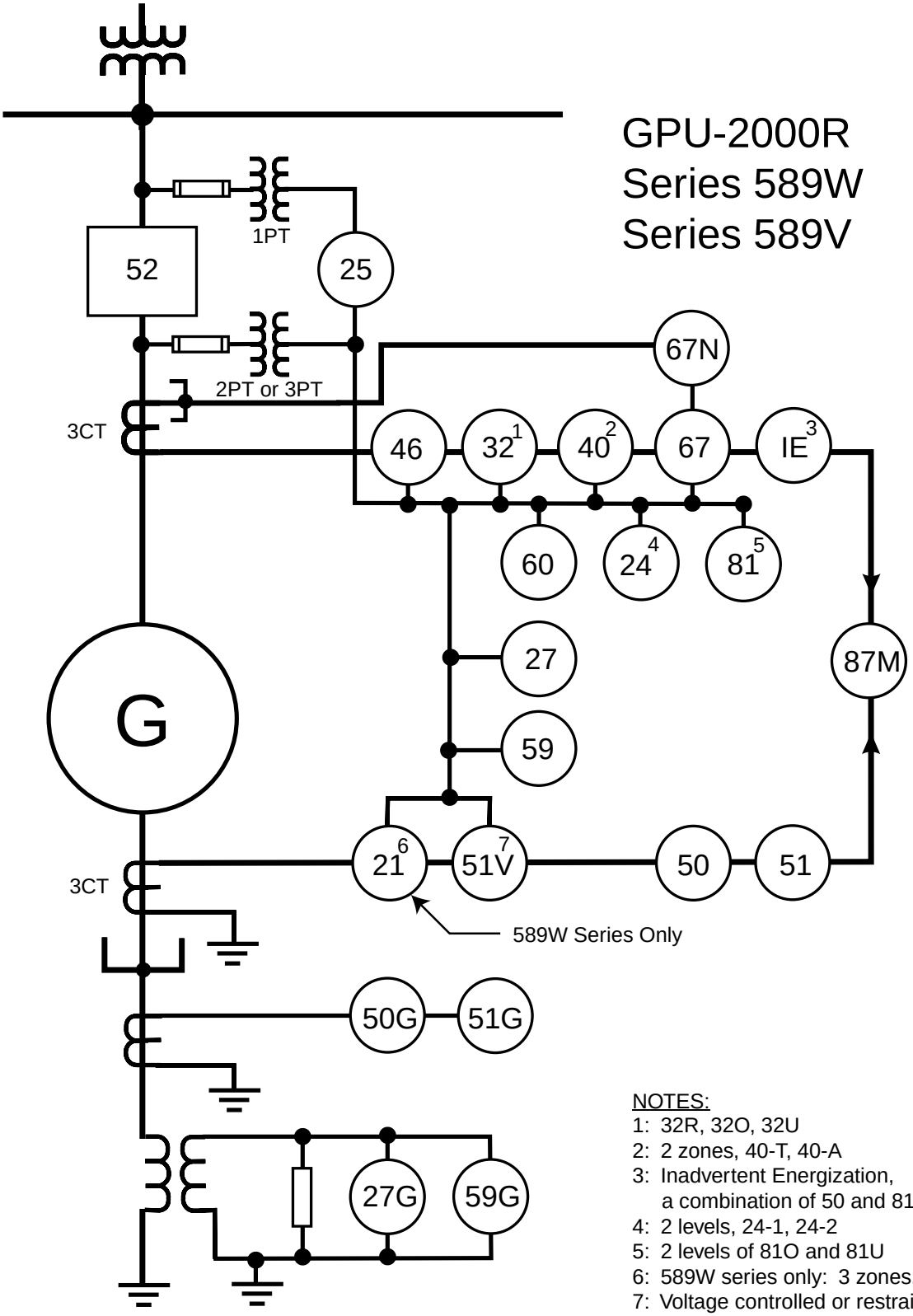

NOTES:
1: 32R, 32O, 32U
2: 2 zones, 40-T, 40-A
3: Inadvertent Energization, a combination of 50 and 81
4: 2 levels, 24-1, 24-2
5: 2 levels of 81O and 81U
6: 589W series only: 3 zones, Z1A, Z1, Z2
7: Voltage controlled or restrained
8. Elements not needed may be disabled in the settings process.
9. See Figure 4 for connections diagrams with ct-pt polarities shown.

Figure 3. Protective Elements Included in Series 589W, 589V Units

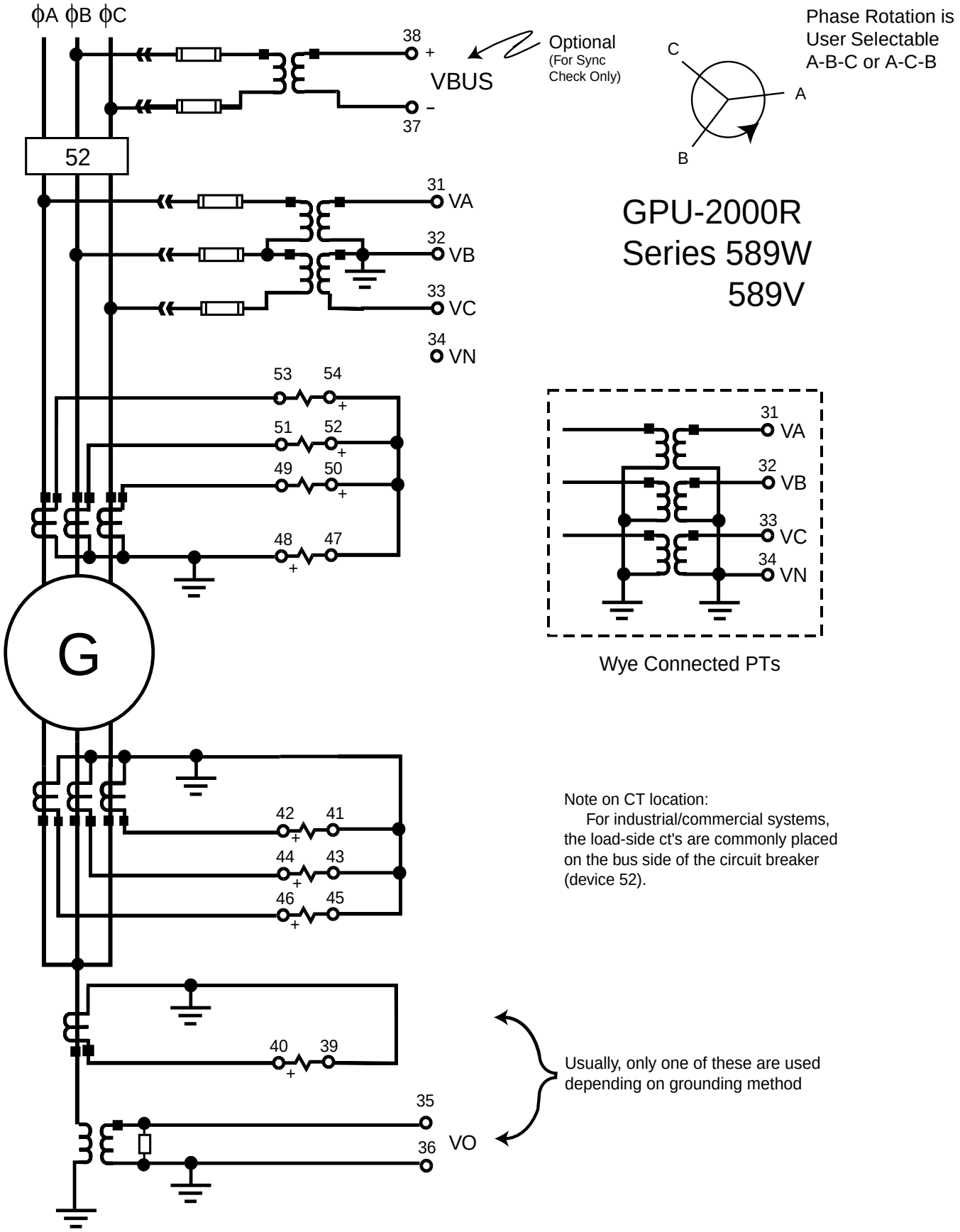

Figure 4. Typical Connections, 589W/589V Series Units

Interfacing with the Relay

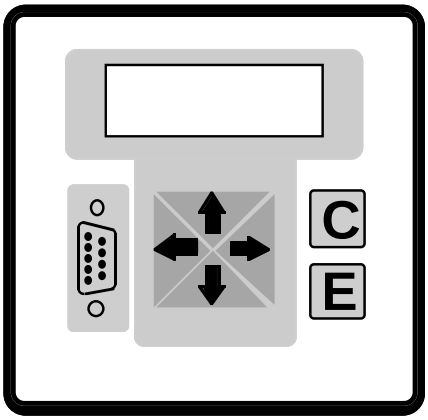

Figure 5. MMI Access Panel

Man-Machine Interface (MMI)

The man-machine interface (MMI) on the front panel consists of a graphics LCD, six push-buttons (keys) and twelve LED targets. Press the Enter <E> key to access the Main Menu. Use the ↑ and ↓ arrow keys to move through the various menus and to change the character value when you enter the alphanumeric password. Use the Enter <E> key to select the desired menu or desired value when you change settings.

Use the ← and → arrow keys to decrease and increase, respectively, setting values or record numbers. Also use them to move from left to right within the password string.

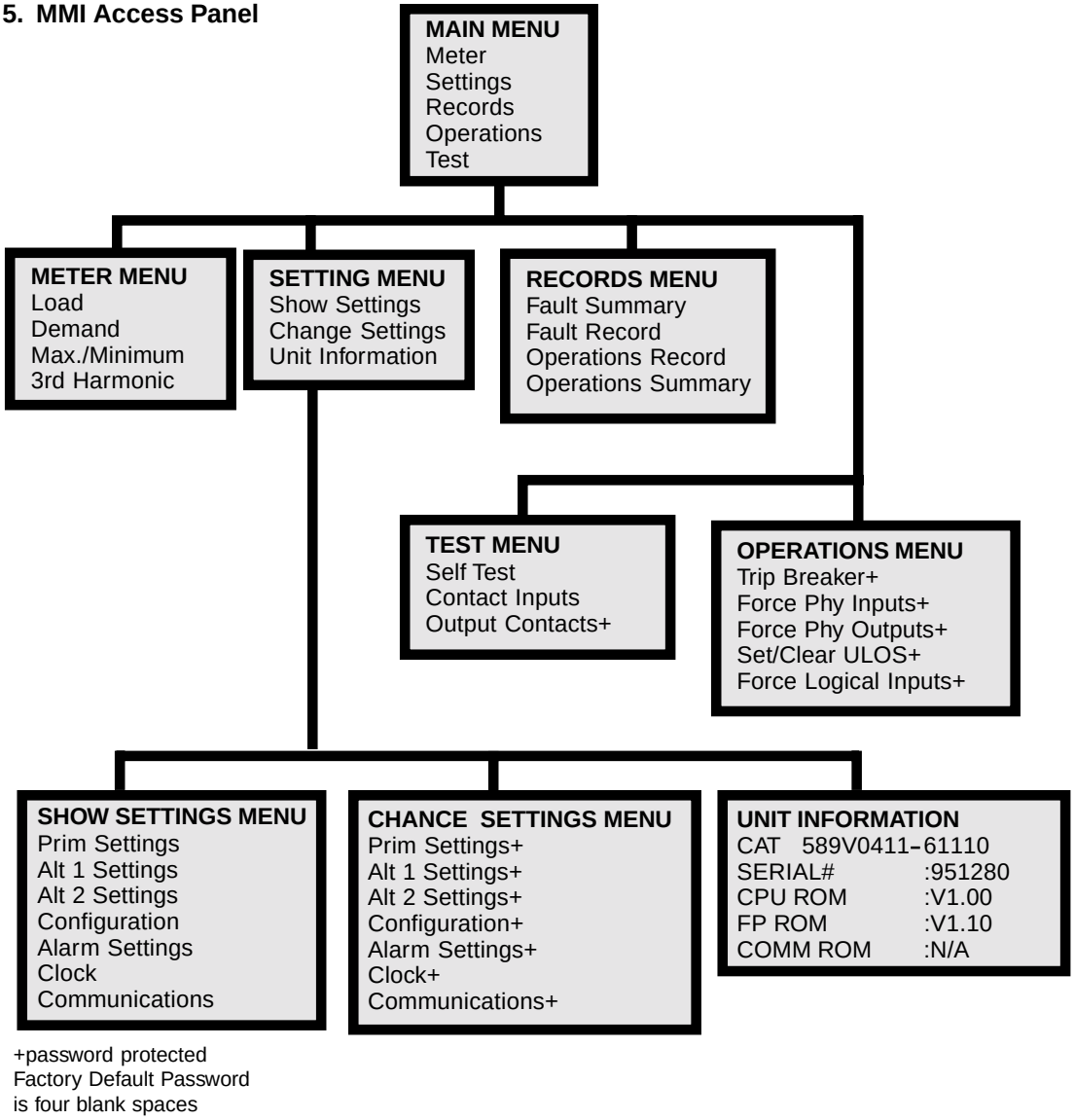

Figure 6. Man-Machine Interface Menus

External Communications Program Menus

Below is an outline of all the menus available through the Windows®-based GPU2000R External Communications Program. Many of these menus are the same as those in the man-machine interface (MMI), but some are unique to the ECP.

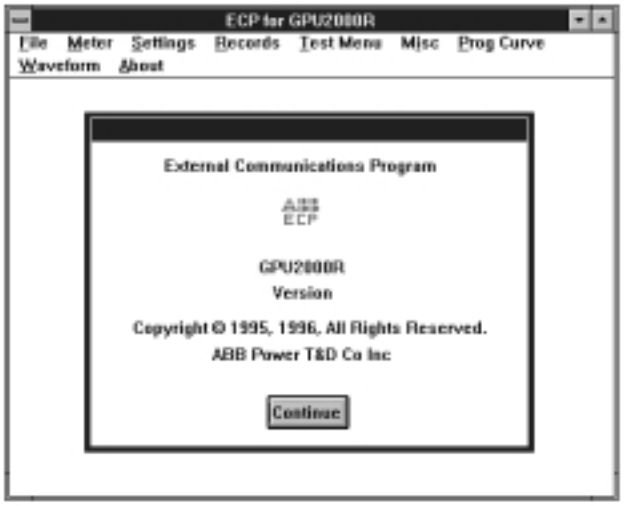

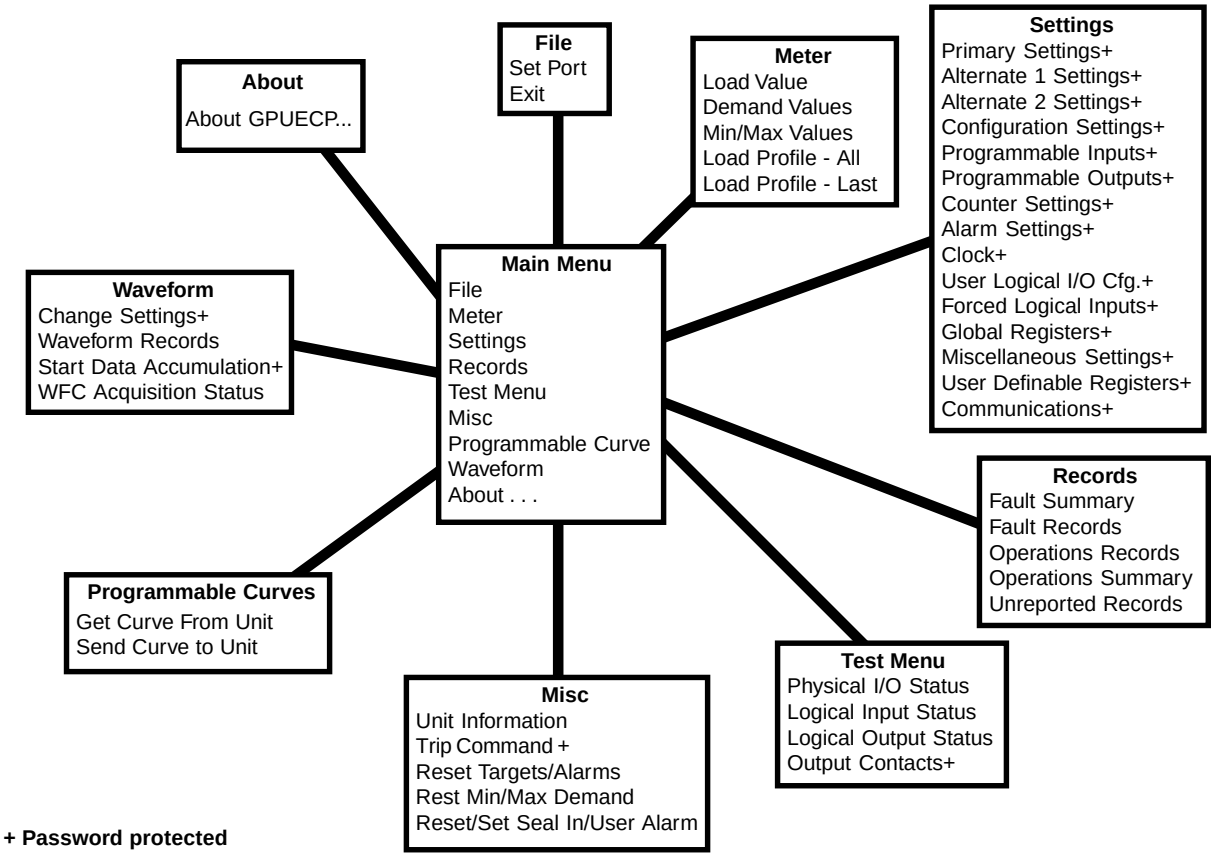

Figure 7. External Communications Programs Menus

Metering

- Amperes, volts, watts, VARs, kWh, kVARh
- Demand amperes, watts, VARs
- Peak demand amperes, watts, VARs with Time and Date Tags
- Power Factor and Frequency
- Phase and Ground Currents (magnitude and angle)
- Zero (I_0), positive (I_1), negative (I_2) sequence currents
- Phase voltages for Wye or open Delta voltage transformers (VTs), (magnitude and angle)
- Positive (V_1) and negative (V_2) sequence voltage
- Volts per Hertz

Records

- Fault Summary for last 32 Trips
- Detailed Fault Record for each of last 32 Trips
- Operations Summary
- Operations Record of last 128 operations, indicating any change of state of inputs, outputs, protective functions, editing of settings, self-diagnostic alarms, loss of control voltage.

Programmable Logic Controller Output

In addition to the Master Trip Output Contact, six (6) user-programmable output contacts are provided.

Via the ECP, you can program the GPU2000R output contacts to those functions which best meet your protective requirements.

Over 100 pre-programmed output functions are available to choose from, plus nine (9) user definable functions. Adjustable output contact time delay is available with each of the six (6) outputs, eliminating the need for auxiliary timers. The time delays are individually adjustable from 0 to 60 seconds in 0.01 seconds steps.

Programmable Binary (Contact) Inputs

The GPU2000R also provides eight (8) user-programmable contact inputs that may be configured in an AND or OR logic mapping and for a normally open (NO) or normally closed (NC) assertion state. These programmable inputs can monitor, enable, initiate, or actuate functions.

Approximately 50 pre-programmed functions are available, plus nine (9) user definable functions.

Communications Ports

The GPU2000R has a 9-pin, standard RS-232C serial communications interface on the front panel. This port is used to interrogate or program the unit by using the PC-based ECP. Additional communication port configurations are available on the back panel of the GPU2000R, including:

- Isolated RS-232C (9-pin)
- Isolated RS-485 (3-wire)
- INCOM™ (2-wire) Port
- Modbus Plus™ Port
- IRIG-B (for precision time synchronization)

Refer to the selection chart on page 15 for available port and protocol combinations.

Optional Features

Load Profile

The Load Profile feature stores voltage, demand kilowatts, and demand kiloVARs for a selectable interval of 5, 15, 30, or 60 minutes for which the load profile record will then contain 13.3, 40, 80, or 160 days of information, respectively. The recorded data is stored in a comma-delimited ASCII format which allows for importing in most text editor programs (word processor or spreadsheet) for load analysis and graphing.

Oscillographic Data Storage (Waveform Capture)

The Oscillographics option captures the waveforms of the currents and input voltages, and protective and logic functions for the purpose of fault analysis. The storage capacity in cycles of fault data is based on the number of records and the number of analog inputs selected by the user for capture. For example, with nine (9) analog channels selected and a record length of sixty-five (65) cycles, nine (9) events can be captured. The user may also select the number of prefault cycles to be retained in the records.

A separate analysis program is used to view the waveforms after the captured data is downloaded from the relay to a file on the user's PC.

User Programmable Curves

The GPU2000R includes as standard eight (8) pre-programmed families of time-current curves. In the very unusual circumstances that none of these curves is suitable for the application, this optional feature allows the user to design a special curve and download it to the relay. The curve shape must be of an inverse nature with no discontinuities.

Ratings and Tolerances

The following are the ratings and tolerances of the GPU-2000R.

Current Input Circuits

- 5-A input rating, 16 A continuous and 450 A for 1 second
- 1-A input rating, 3 A continuous and 100 A for 1 second
- Input burden 0.245 VA at 5 A (2 - 8A range)
- Input burden 0.014 VA at 1 A (0.4 - 1.6A range)
- Frequency 50 or 60 Hz

Contact Input Circuits Voltage Range

- 24 vdc model: 12 V to 140 Vdc
- Other models: 24 V to 280 Vdc

Voltage Input Circuits

Voltage ratings based on the VT connection configuration setting.

BURDEN

- 0.04 VA for V(A-N) at 120 Vac

VOLTAGE

- **Wye** Connection: 160 V continuous and 480 V for 10 seconds
- **Open-Delta** Connection: 260 V continuous and 480 V for 10 seconds
- **Vo** Input (termininals 35-36) 160 V continuous and 480 V for 10 seconds

Contact Input Circuits (Input Burden)

- 2.10 VA at 220 Vdc and 250 Vdc
- 0.52 VA at 125 Vdc and 110 Vdc
- 0.08 VA at 48 Vdc
- 0.02 VA at 24 Vdc

Control Power Requirements

- 48 Vdc model, range = 38 to 58 Vdc
- 110/125/220/250 Vdc models, range = 70 to 280 Vdc
- 24 Vdc model, range = 14 to 29 Vdc

Control Power Burden

- 24 Vdc = 0.7A max @ 19 V
- 48 Vdc = 0.35A max @ 38 V
- 110/125 Vdc = 0.25A max @ 70 V
- 220/250 Vdc = 0.10A max @ 250 V

Output Contacts Ratings

125 Vdc

- 30 A tripping
- 6 A continuous
- 0.25 A break inductive

250 Vdc

- 30 A tripping
- 6 A continuous
- 0.1 A break inductive

For detailed information on the protective functions, request Instruction Book IB 7.11.1.7-10 from your ABB representative

Operating Temperature

- –40º to +70º C

—Operating temperatures below –20º C may impede the LCD display contrast.

—Operating temperatures below 0º C may impede Modbus Plus™ communications on units equipped with the Modbus Plus™ communications card (rear port options 6 and 7).

Humidity

- Per ANSI 37.90, up to 95% without condensation

Transient Immunity

- Surge withstand capability
  - SWC and fast transient tests per ANSI C37.90.1 and IEC 255-22-1 class III and 255-22-4 class IV for all connections except comm or AUX ports
  - Isolated comm ports and AUX ports per ANSI 37.90.1 using oscillatory SWC Test Wave only and per IEC 255-22-1 class III and 255-22-4 class III
  - Impulse voltage withstand test per IEC 255-5
  - EMI test per trial use standard ANSI C37.90.2 - 1995

Tolerances Over Temperature Range of -20º C to +55º C

Function	Pickup	Dropout	Timing (whichever is greater)
51P/51V	± 3% of rated current	98% of setting	± 7% or +/-- 16 milliseconds
50P	± 7% of rated current	98% of setting	± 7% or +/-- 16 milliseconds
46/67P	± 3% of rated current	98% of setting	± 7% or +/-- 16 milliseconds
51G	± 3% of ground rating	98% of setting	± 7% or +/-- 16 milliseconds
50G	± 7% of ground rating	98% of setting	± 7% or +/-- 16 milliseconds
27/59/81V	± 2% of rated voltage	99.5% of setting	± 7% or +/-- 16 milliseconds
32R	± 5% of setting or + 0.2% of rated power, whichever is greater	95% of setting	± 7% or +/-- 16 milliseconds
81	± 0.01 Hz	± 0.01 Hz	± 1 cycle
320/32U	± 2% of rated power	98% of setting	± 7% or +/-- 16 milliseconds
87M	± 10% of operate current	95% of setting	
27G/59G	± 5% of setting	98% of setting	± 7% or +/-- 16 milliseconds
24	± 5% of setting	98% of setting	± 7% or +/-- 16 milliseconds
21/40	± 5% of setting or 0.1 ohms, whichever is greater	98% of setting	± 7% or +/-- 16 milliseconds
Ammeter	± 1% of Phase: rated current. Gnd: ground rating		
Voltmeter	± 1% of VT Connection setting		
Power Meter	± 2% of I xV, rated current X rated voltage		
Frequency	± 0.01 Hz		

Dielectric

- All circuits to ground except INCOM™, Modbus Plus™, and non-isolated RS232 ports
  2828 VDC for 60 seconds. (Equivalent to 2000VAC)
- INCOM™ Circuit to ground
  2121VDC for 60 sec (Equivalent to 1500VAC)
- Modbus Plus™ Circuit to ground
  1414 VDC for 60 sec (Equivalent to 1000VAC)

Specifications Subject to change without notice.

Weight *(GPU-2000R unit)*

- Unboxed 6.8 kg (15.0 lbs)
- Boxed 9.3 kg (20.5 lbs)

Case Dimensions (Standard 19” Rack mount 3 units high)

Dimensions are in: inches
[millimeters]

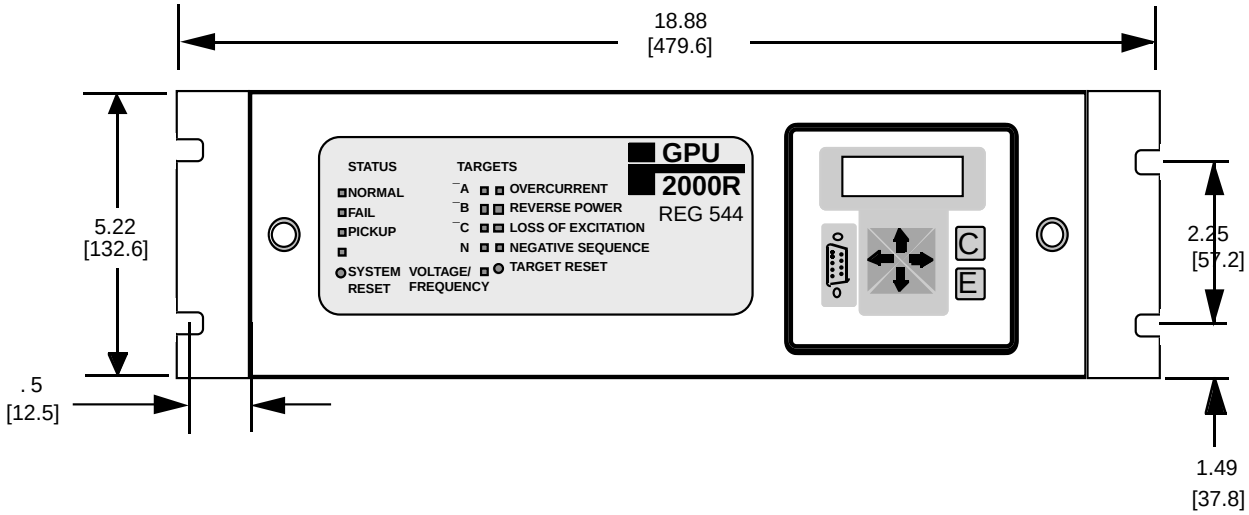

- Front Panel illustrated here is for the 589T Series Units.
- See front cover picture for 589V/589T Series.
- Dimensions are the same for all 589 Series

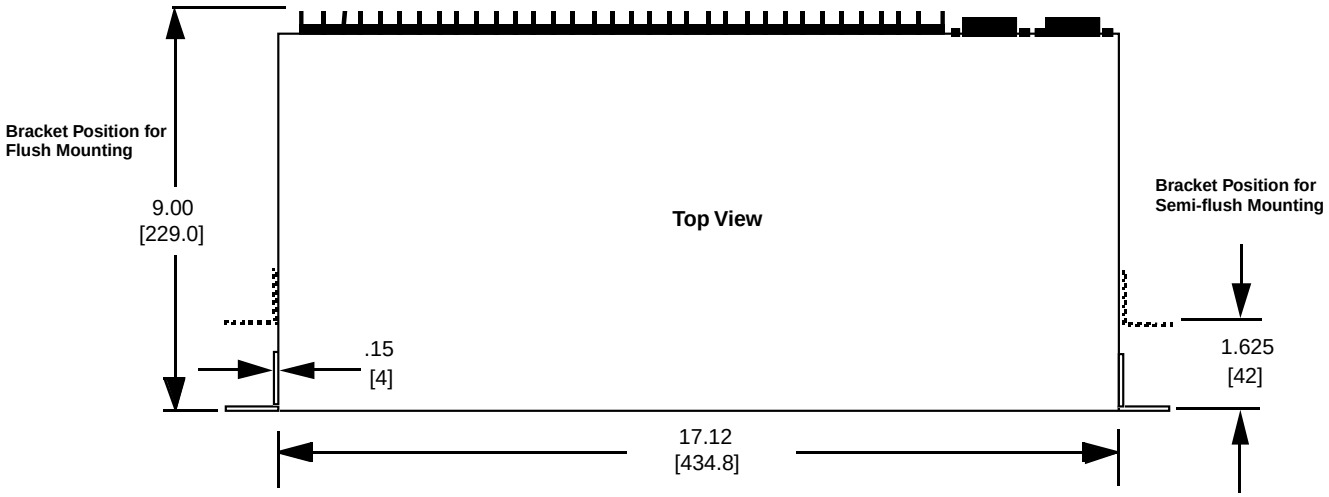

Figure 8. Dimensions

Panel Mounting Kit

The complete kit will include a bezel, its associated hardware and gasket, as well as a lens cover with its associated hardware. This kit will provide a means for panel mounting and dustproofing.

Ordering Information:

Horizontal Panel Mounting Kit	604513-K1
Vertical Panel Mounting Kit	604513-K2

Spare Parts List:

Bezel/gasket assembly only	604513-K3
Horizontal lens cover assembly	613724-K1
Vertical lens cover assembly	613724-K2

Horizontal Mounting

Note: The Bezel Assembly is available as an option for mounting the 2000R units in a panel application.

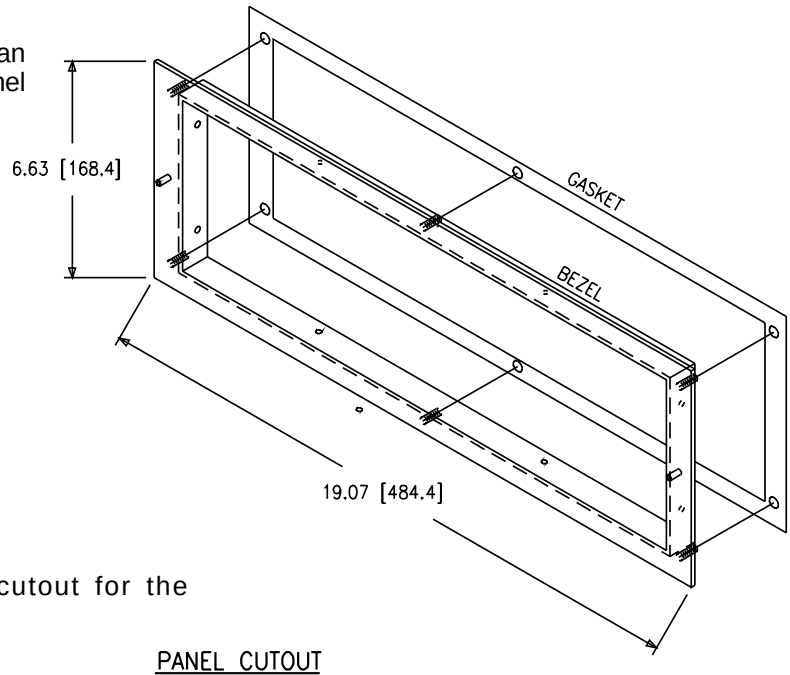

Note: Below is the panel drilling cutout for the GPU-2000R unit and the bezel assembly.

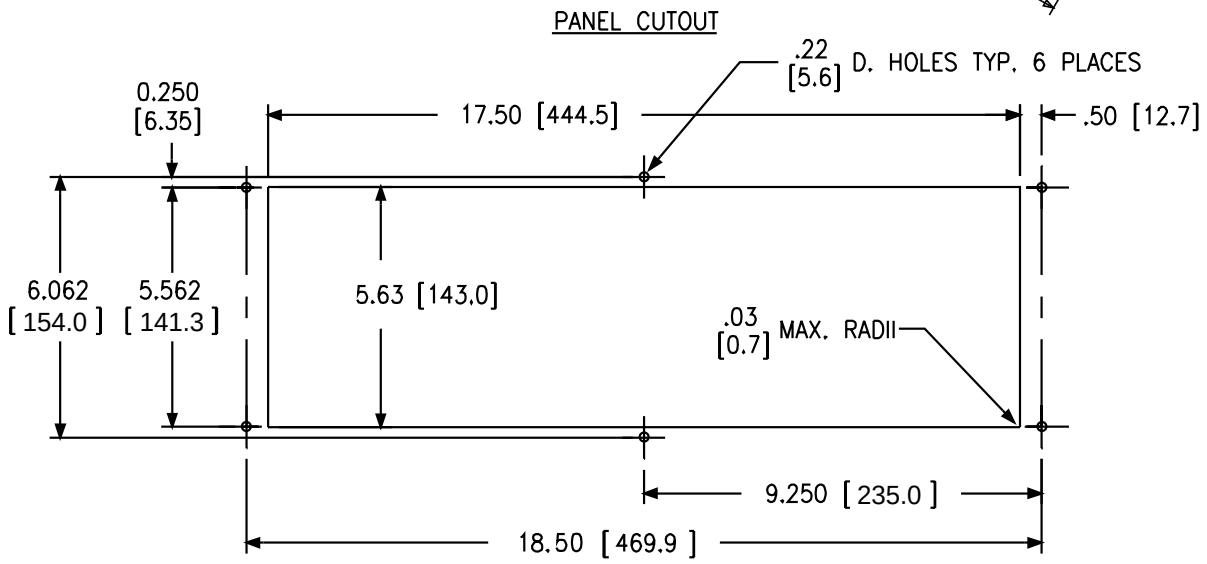

NOTE: DIMENSIONS ARE INCHES [MILLIMETERS]

Vertical Mounting

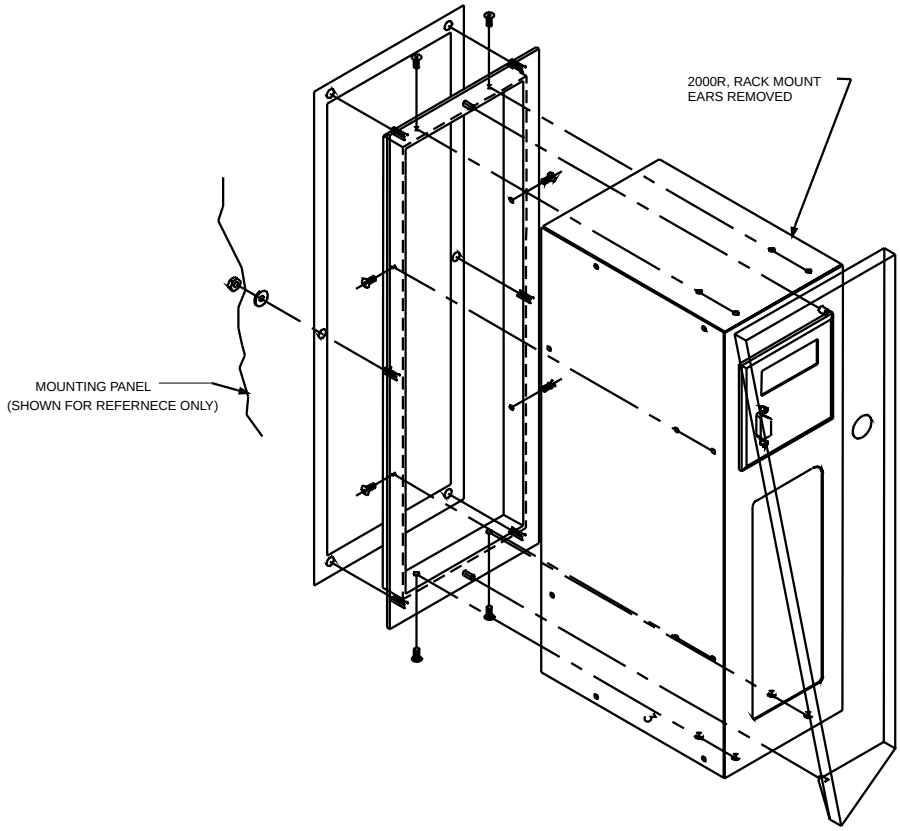

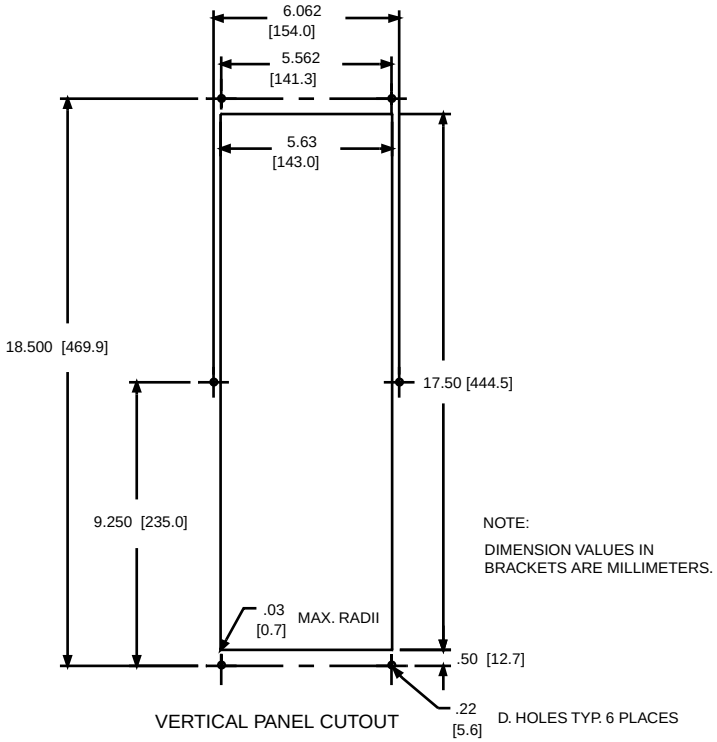

Figure 9 shows typical basic control connections for the relay. Device 86, hand-reset lockout relay, is employed to require intervention on faults detected by the GPU2000R on functions such as 87, 59G, 27G, 51G, and 50G, before the machine can be returned to service. The GPU2000R also includes programmable “seal-in” outputs that could replace the separate 86 if desired.

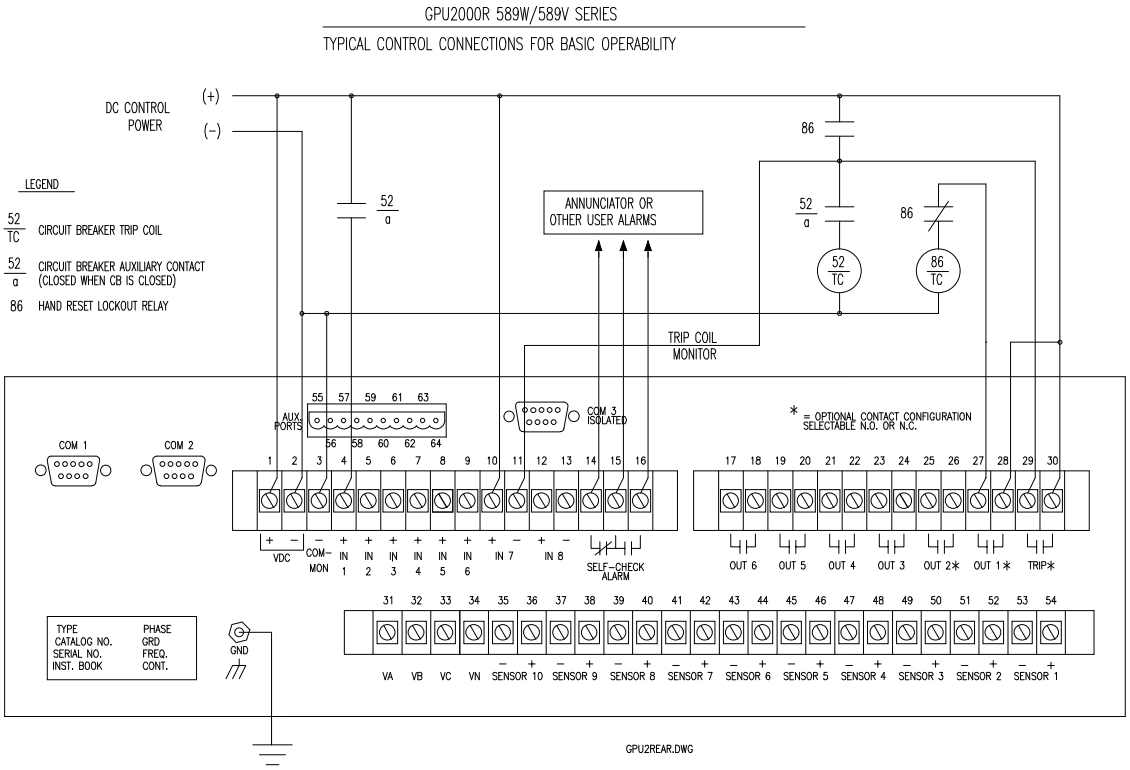

If preferred, a 52b circuit breaker auxiliary contact may be used instead, by programming the logical input 52a to be asserted when the contact is open (use “O” instead of “C” in the input logic mapping.)

Figure 9. GPU-2000R Typical Basic Control Connections

Ordering Instructions

The 2000R series of relays have a structured catalog number ordering system. The unit's catalog number is built up from 13 customer-selectable characters. Each character identifies features or functions that can be incorporated into the relay.

Sample Catalog Number

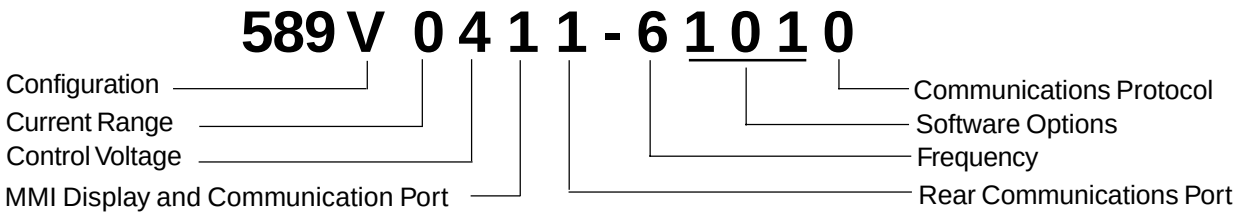

How To Order

Using the Ordering Selection sheet, select those special features or options that are required to adapt the 2000R to your specific application. Create the catalog number, as shown above, by selecting the associated number or letter that refers to the desired feature or option from each category.

The table below illustrates all possible hardware configurations for the communication ports and the supported protocols. The Catalog Number Select Option columns list every communication option for which the relays can be configured.

The different protocol variations are outlined under the corresponding communication ports that support them. Select the row containing the protocol combination that best suits your communications requirements and use the corresponding catalog number options to fill in the brackets [ ] of the catalog number.

The auxiliary port labelled IRIG-B receives a demodulated IRIG-B signal for 2000R clock synchronization purposes.

Select other characteristics of the relay from the following pages.

Catalog Number Select Option		REAR PORT ASSIGNMENTS						
		COM 1 NON ISOLATED RS-232		COM 2 NON ISOLATED RS-232	COM 3 ISOLATED RS-232 unless noted	AUX. PORTS 55 57 59 / 56 58 60 RS-485 ISOLATED	61 / 62 INCOM ISOLATED	63 / 64 IRIG-B
589V041[ ] -	6101[ ]	With Display	Without Display*					
0	0		Standard	Standard				
1	0		Standard		Standard			
2	0		Standard		Standard	Standard		IRIG-B
2	4		Standard		Modbus® or Standard See Note #	Modbus® or Standard See Note #		IRIG-B
3	0		Standard				INCOM	IRIG-B
4	0		Standard			Standard	INCOM	IRIG-B
5	0		Standard			Standard		
6	4		Standard	Standard	Modbus® (Modbus Plus™)			
7	4		Standard		Modbus® (Modbus Plus™)	Standard		
8	0		Standard		Standard (RS-485)	Standard		IRIG-B
8	4		Standard		Modbus® or Standard (RS-485) See Note #	Modbus® or Standard See Note #		IRIG-B

Select Communication Options Table

An empty selection box indicates communication port is either not provided or is disabled.

Consult factory for availability.

* Main board jumper selectable front or rear.
\# Protocol selectable in settings process, all 4 combinations possible.

Windows is a trademark of Microsoft Corporation.
Modbus® and Modbus Plus™ is a trademark of Modicon, Inc.

Ordering Selections

Catalog Number Selection → **5 8 9** V 0 4 1 1 - 6 1 0 1 0

User Selections

Configuration
- Standard (*See Note 1) ..... T
- With Differential Function V
- With Differential and Distance Functions ..... W

Current Range

Phase	Ground	
2.0 - 8 A	2.0 - 8 A	0
2.0 - 8 A	0.4 - 1.6 A	1
0.4 - 1.6 A	0.4 - 1.6 A	2

Control Voltage
- 38 - 58 Vdc 3
- 70 - 280 Vdc 4
- 14 - 29 Vdc 9

Man-Machine Interface
- Horizontal/No Man Machine Interface 0
- Horizontal/Man Machine Interface 1
- Vertical/No Man Machine Interface 5
- Vertical/Man Machine Interface 6

Rear Communications Port
(Front RS-232 port is standard equipment on all units)
- RS-232 (non-isolated) 0
- RS-232 (isolated) 1
- Auxiliary Port & RS-232 (isolated) 2
- INCOM™ (isolated) 3
- Auxiliary Port & INCOM™ (isolated) 4
- RS-485 (isolated) 5
- Modbus Plus™ & RS-232 (non-isolated) 6
- Modbus Plus™ & RS-485 (isolated) 7
- Dual RS-485 Ports (isolated) 8

Frequency
- 50 Hertz 5
- 60 Hertz 6

Software Options
- No Oscillographics 0
- Oscillographics 1
  - Std. ANSI Curves/No User Programmable Curves 0
  - Std. ANSI Curves and User Programmable Curves 1
    - No Load Profile 0
    - Load Profile 1

Communications Protocol
- Standard (10-Byte protocol) 0
- Modbus® /Modbus Plus™ 4

*Note 1: Consult factory for availability of the 589T series.