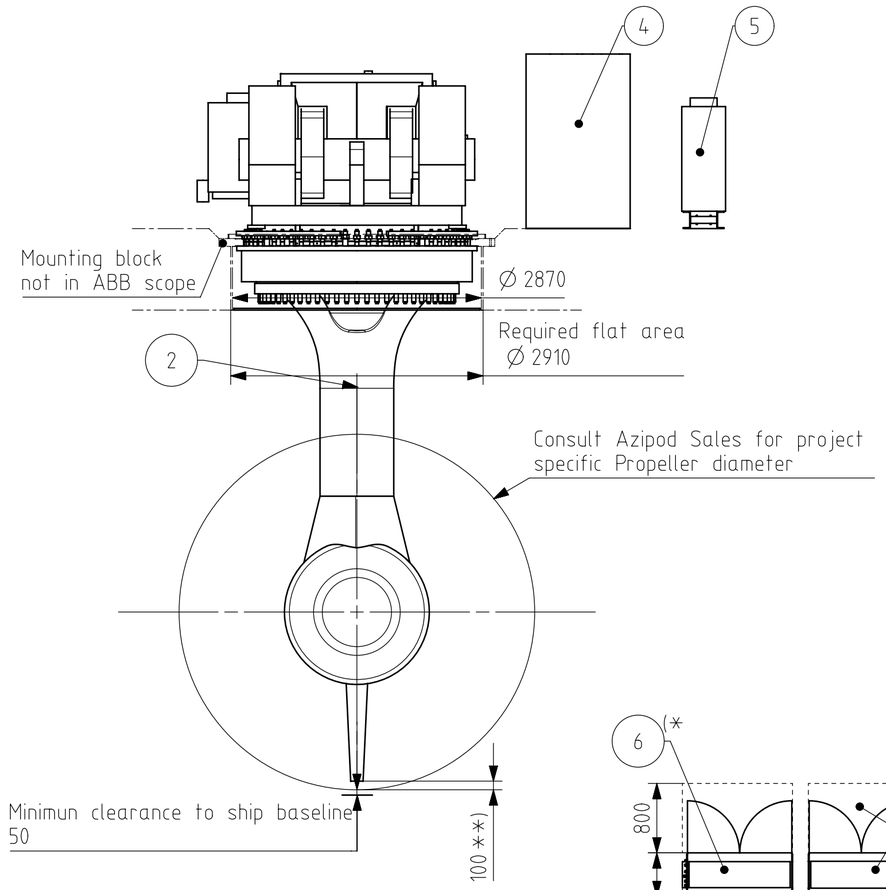

**) Consult Azipod Sales for other heights

***) Available Strut heights:
3790mm
Consult Azipod Sales for other heights

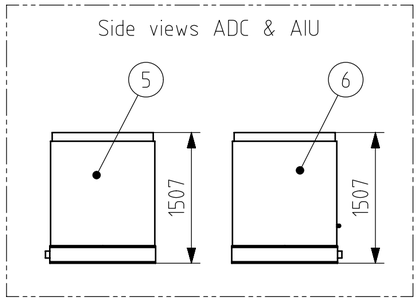

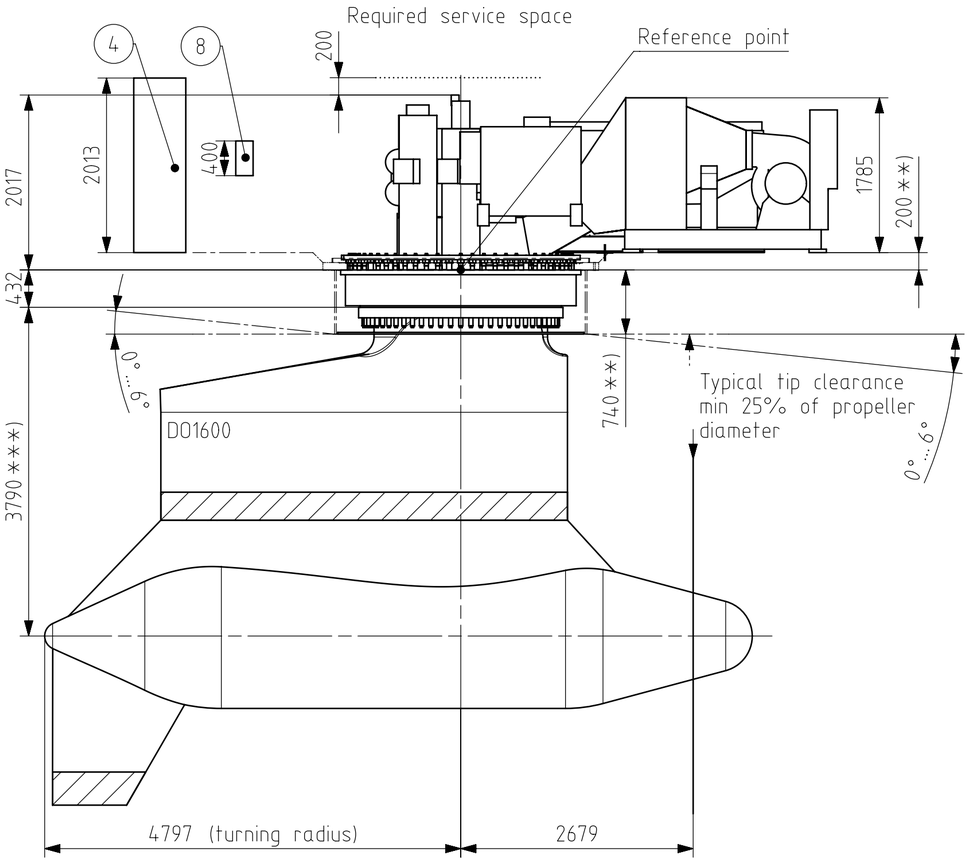

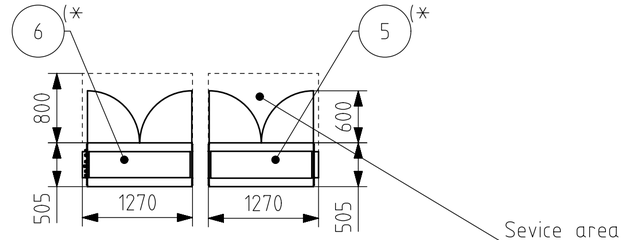

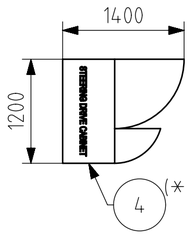

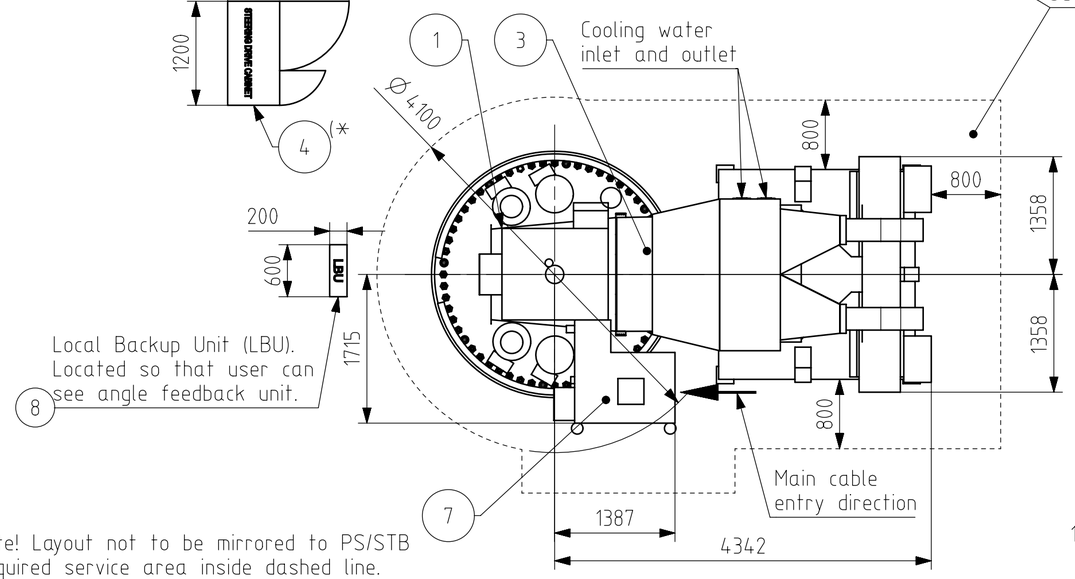

Note! Layout not to be mirrored to PS/STB
Required service area inside dashed line.

*) AIU and steering drive cabinets can be located freely inside Azipod room.
ADC cabinet can be located freely inside Azipod room as long as it is
horizontally less than 5m from steering module and Max. vertical distance
from shaftline to ADC cabinet is less than 6m.

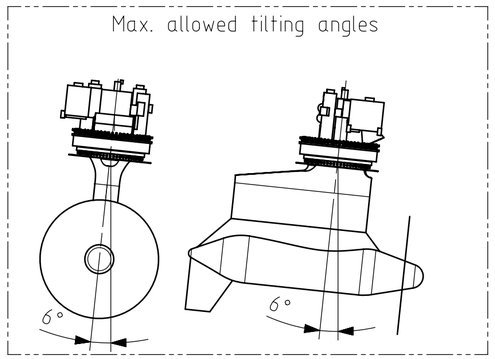

Project specific structure

Number	Part	Weight [kg]
1	Steering module	14000
2	Propulsion module	78000
3	Cooling air unit (CAU)	4700
4	Steering drive cabinet	500
5	Azipod interface unit (AIU)	440
6	Auxiliary device cabinet (ADC)	460
7	Junction box (JB1)	470
8	Local Backup Unit	30

Mounting angle for steering
module and CAU can be selected
freely in 90°steps. 0° is standard.

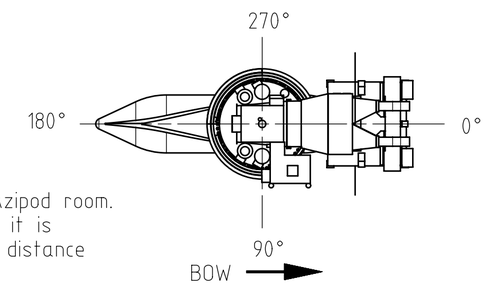

PRELIMINARY
Not to be used
for construction.

Created 2019-08-15 Partanen, Milla	Document kind 27	Title MAIN DIMENSIONS	Scale 1:50
Reviewed 2019-11-19 Railo, Ville-Pekka	Responsible department VAX		
Approved 2019-11-19 Ruyck, Kasper De.	Based on		Language EN
Security level Internal	Our reference / Weight kg	Machine Type AZIPOD DO1600A-S2300	Size A2
ABB Marine & Ports		Document id 3AFV3503237 / Revision A	Sheet 1/1

We reserve all rights in this document and in the information contained therein. Reproduction, use or disclosure to third parties without express authority is strictly forbidden. © Copyright 2015-2019 ABB. In case of interpretation disputes the English text applies.

Unless otherwise stated:
General tolerances for welded constructions EN ISO 13920-BF.
Welding quality level C according to EN ISO 5817.
Stamped steel parts DIN 6930-m. Thermal cut ISO 9013-331.

Unless otherwise stated:
General tolerances for machining ISO 2768-mK.
Threads according to ISO 965 tolerance class 6H/6g.
Symbols for roughness according to ISO 1302.

ABBA2DFI