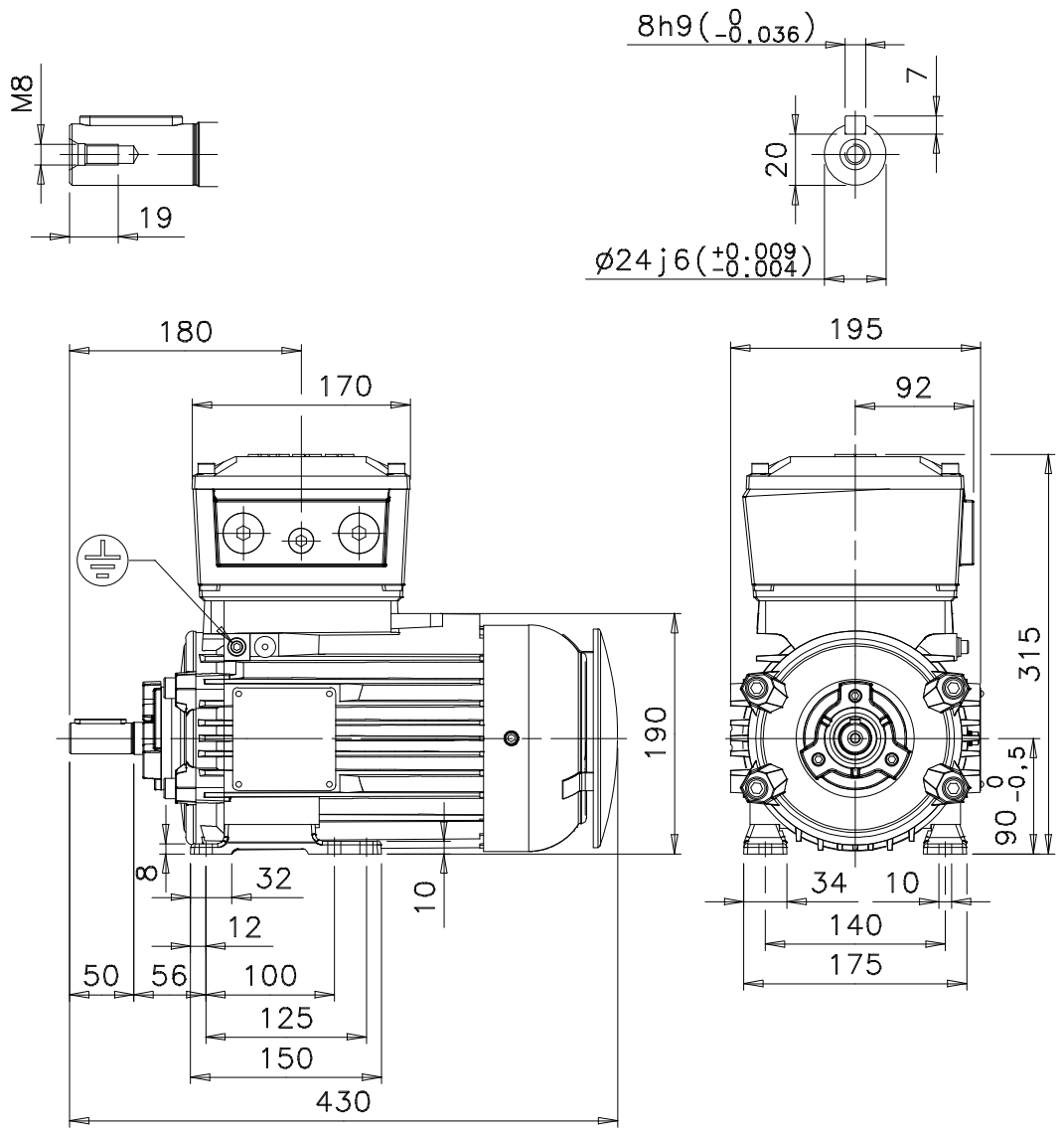

Additional information:

Dimension Print	Motor Type: M3JP 90SL_ 2-8, V5	Document No: 3GZF500209-21 A 13 JP 90 A
Description: STANDARD SQUIRREL CAGE MOTOR		

Unit:	Electrical Machines, LV Motors	Issued by:	P.Tihinen	Replaces:
Date:	09.07.2004	Approved by:	R.Nykvist	Replaced by:

ABB Oy	Customer Reference:	ABB