This document is issued by means of a computerized system.
The digitally stored original is electronically approved. The approved document has a date entered in the 'Approved'-field.
A manual signature is not required.

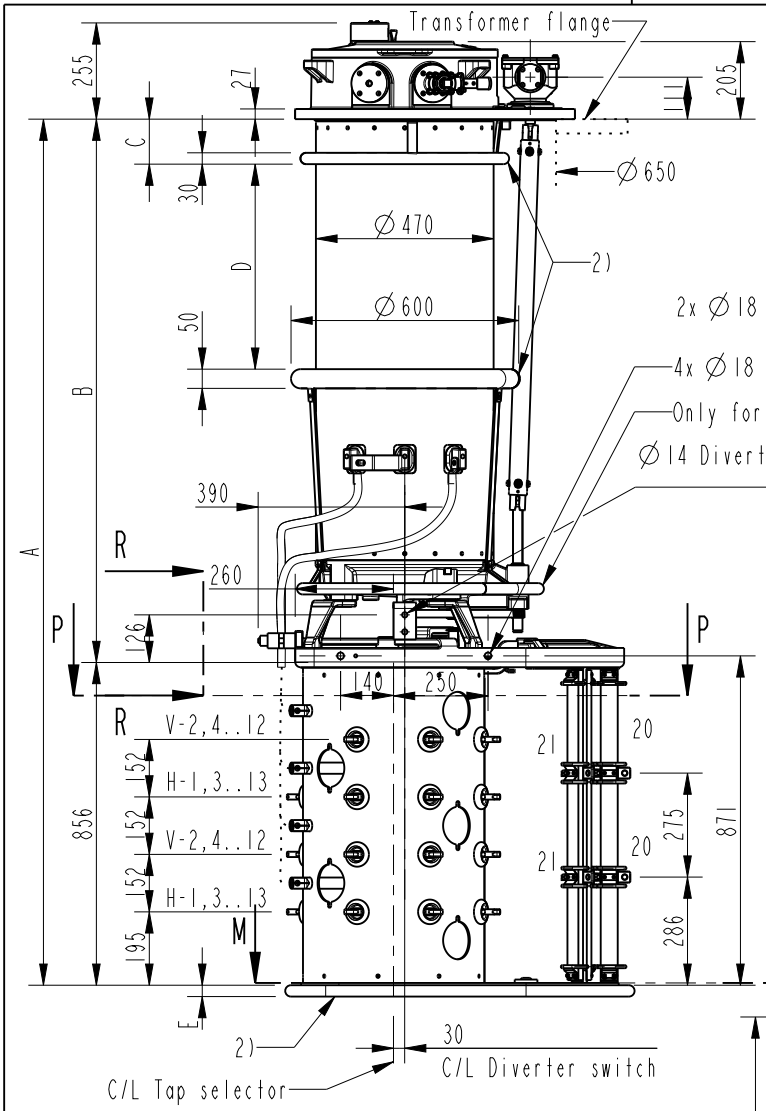

a) For mounting on active part use A+106, B+106 and C+106 (See also Drawing 54920103-1)
c) Not applicable for 380 kV

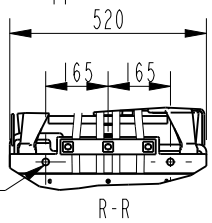

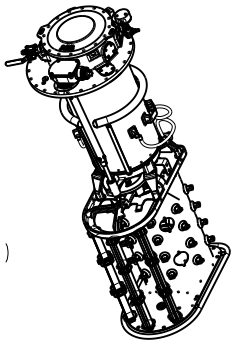

4x Ø 18 of which 2x at opposite side 1)
Only for insulation level 1050 kV
Ø 14 Diverter switch terminal

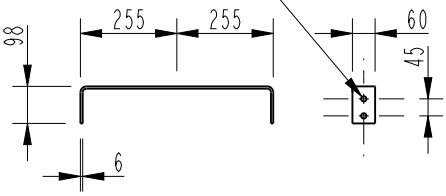

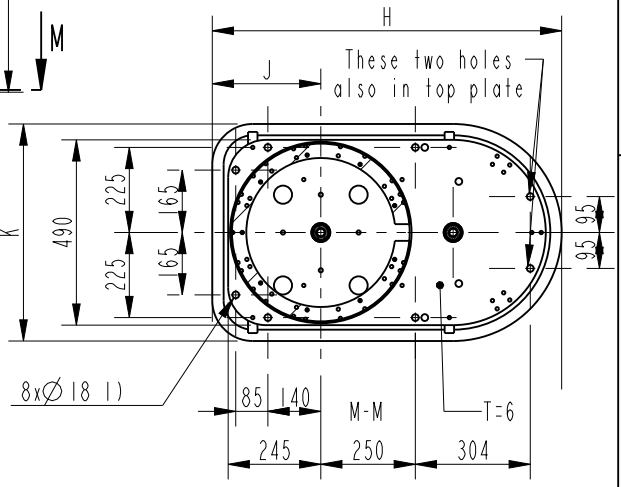

1) Holes for mounting of supports for cleats and leads
2) Shielding rings for insulation levels 650, 750 and 1050 only

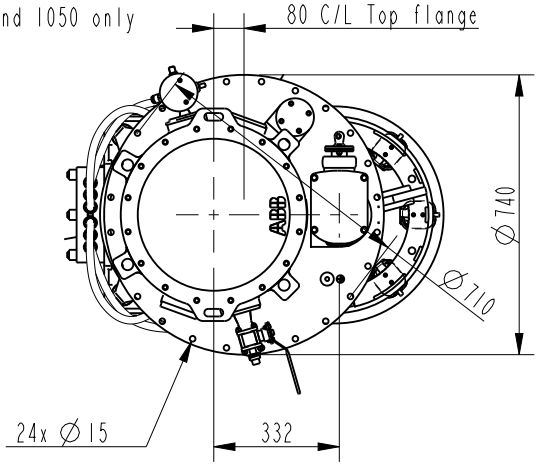

INSULATION LEVEL kV		SHORT VERSION b) 380,650 750	1050
Dimensions in mm	A	1990 a)	2290 a)
	B	1134 a)	1434 a)
	C	119 a)c)	119 a)
	D	240 c)	540
	E	30 c)	36
	H	930 c)	936
	J	290 c)	293
	K	580 c)	586

Prepared: Tomas Axelsson	2011-12-29	Responsible department: PPCO/TK	Title: Tap-Changer VUCGR, VUCGD
Modified by: Tomas Axelsson	2012-02-15	Take over department	
Approved by: Henrik Sundberg	2012-04-02	Used in product	VUCG.B(2 phase) XXXX/450-800/111
Revision: A		Order: 9,13 Pos	Language: 82
ABB		Document no.: 1ZSC004162-AAS	Sheet no.: 1
			No. Shts.: (2)

6917 028-PA(A4)Rev1

The information contained in this document has to kept strictly confidential. Any unauthorized use, reproduction, distribution or disclosure to third parties are strictly forbidden.
ABB reserves all rights regarding Intellectual Property Rights.
© Copyright 2010 ABB. All rights reserved.

This document is issued by means of a computerized system.
The digitally stored original is electronically approved. The approved document has a date entered in the 'Approved'-field.
A manual signature is not required.

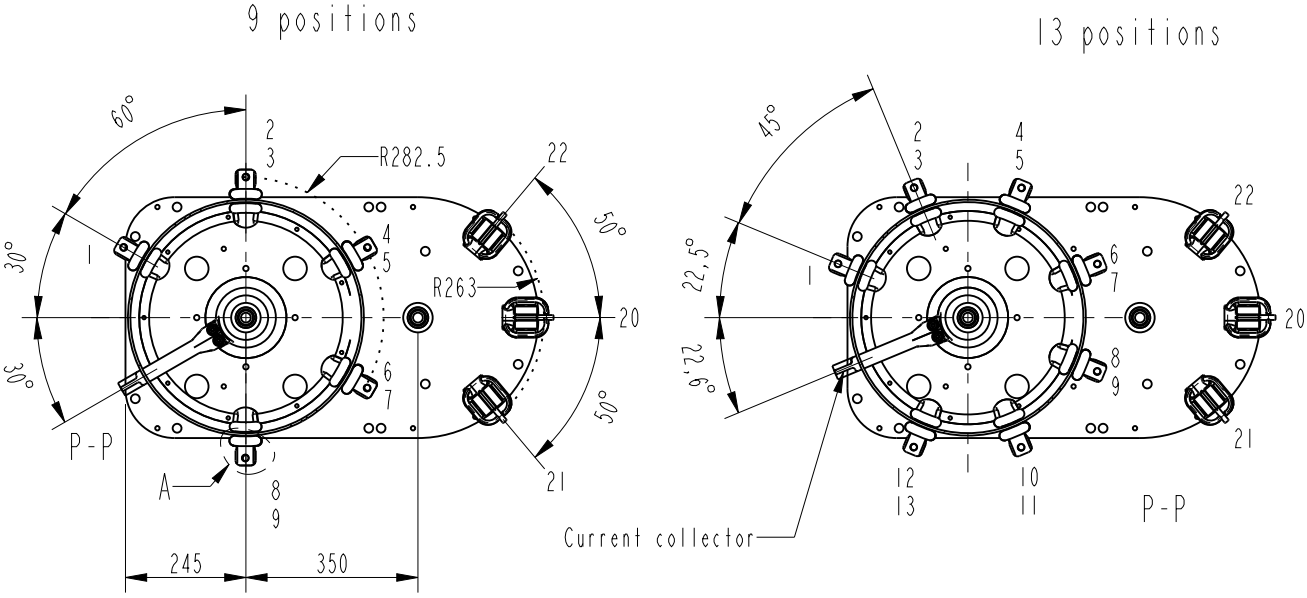

Tap selector contact 20,21 and 22 with shields

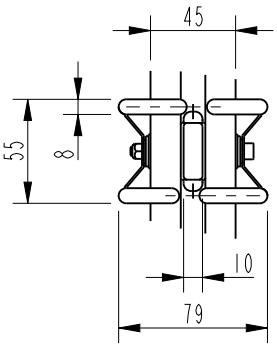

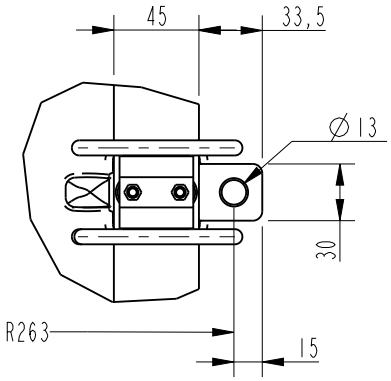

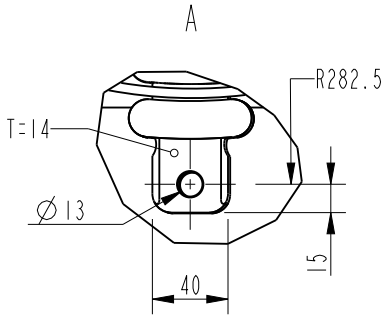

ADDITIONAL DRAWINGS:
Connection Diagrams:See Technical Guide UC
Mounting on active part: 54920103-1
Accessories:54920103-2
Motor Drive BUL:54830001-1
Motor Drive BUE:54830001-2 or -3
External Drive Shaft:54920083-4
Pressure Relay:54920083-2
Bevel Gear:54920083-1

Prepared: Tomas Axelsson	2011-12-29	Responsible department: PPCO/TK	Title: Tap-Changer VUCGR, VUCGD VUCG.B(2 phase) XXXX/450-800/III	
Modified by: Tomas Axelsson	2012-02-15	Take over department		
Approved by: Henrik Sundberg	2012-04-02	Used in product		Language: 82
Revision: A			Order: 9,13 Pos	Sheet no.: 2
ABB			Document no.: 1ZSC004162-AAS	No. Shts.: (2)

6917 028-PA(A4)Rev1

The information contained in this document has to kept strictly confidential. Any unauthorized use, reproduction, distribution or disclosure to third parties are strictly forbidden.
ABB reserves all rights regarding Intellectual Property Rights.
© Copyright 2010 ABB. All rights reserved.