1ZSC000562-AAC en, 2007-04-15

Vacuum interrupters as an alternative to traditional arc quenching in on-load tap-changers

Reprint from TechCon® 2007 Asia-Pacific

Vacuum Interrupters as an Alternative to Traditional Arc Quenching in On-Load Tap-Changers

Lars Jonsson
David Sundqvist

ABB, Sweden

Abstract

Power utilities throughout the world are constantly seeking to improve the economic and technical performance of their assets. Needless to say the two go hand in hand and because of the size of the investments required and the long life expectancy of power grid installations there is a healthy scepticism in the industry to new and unproven technology. It is against this background that innovations from ABB are launched. The revival of vacuum interrupter technology is no exception.

Arc quenching technology alternatives in tap changers have been researched and developed over the past 30 years. Since the early 80's various concepts have been tested in prototypes including static electronic systems and various hybrid designs. In the early 70's ABB patented a system using vacuum interrupters which at the time was not as tried and tested a technology as the industry generally requires. The incentives for shifting to vacuum based technology were not clear enough and the product was never commercialized. Since then the deregulation of the energy sector across the globe has made the effective use of assets an ever more crucial factor. The reduction of the service and overhaul costs of transformer substations is part of this drive towards better efficiency.

The emergence of mature vacuum technology is a response to the need for more efficient asset utilization. Power utilities have however voiced concern about the risk of overvoltage transients in vacuum interrupters. This article will attempt to address this as well as other issues raised by utility owners. Computer simulations of vacuum interrupters in tap changers installed in transformers are discussed and the design principles behind vacuum tap changers are compared to those used in traditional technology.

On-Load Tap-Changers

For the uninitiated, a tap changer is used to change the turn ratio between windings in a transformer. This ratio determines the voltage ratio between the windings and is essential for the stabilization of network voltage under variable load conditions. An on-load tap changer (OLTC) normally has a regulation range of ±20% of the total line voltage, regulation is performed in roughly 9 to 35 steps and operated 10 to 20 times a day in normal grid applications.

There is also a large demand for tap changers used in industrial transformers in rectifier and furnace applications. In some applications these may perform several hundred thousand switching operations per year. Phase Shifting Transformers (Management of power flow in AC networks) and Transformers for High Voltage Direct Current (for long distance transmission and coupling of unsynchronized networks) transmission are two other areas where there is an emphasis on voltage regulation.

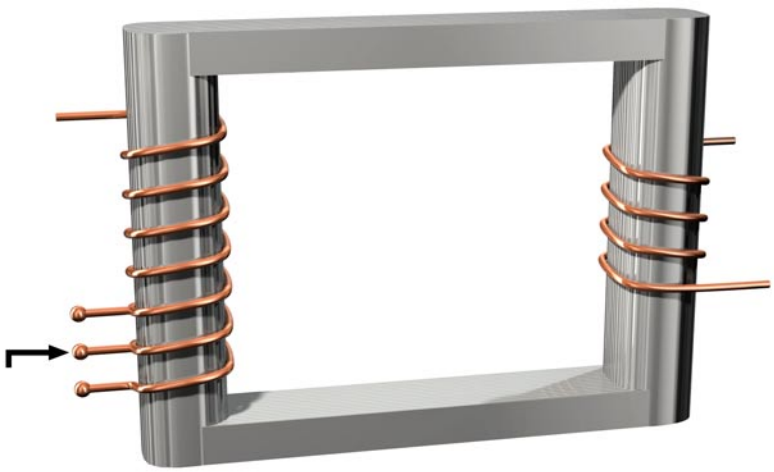

Figure 1
Basic principles of voltage regulation.

Two fundamental design principles are applicable to on-load tap-changers:

- Selector switch; combines the connecting, conducting and breaking of current in one compartment. The low number of parts used results in a highly compact design. This design has constraints that limit its use to transformers with ratings normally not exceeding 100MVA/145kV.
- Diverter switch; separates the current breaking device from the tap selector. It is used in a variety of applications and is the only type of OLTC suitable for high power/voltage applications, see figure 2.

The focus of this article is on the diverter switch type tap changers.

Figure 2
1630 MVA phase shifting transformer equipped with multiple diverter switch tap changers.

Product Philosophy

Tap-changers have been manufactured by the main European manufacturers since the early part of the 20th century and have been improved and refined through continuous research and experience ever since. Extensive engineering, material science, network control, applied physics and transformer technology resources are prerequisites for the maintenance and development of these products.

As a vital component in electrical networks, tap changer failure can be the cause of serious complications. The electro mechanical complexity of these devices highlights the need for state of the art training and product support. This includes the immediate availability of parts for all models, 24 h access to support personnel and the existence of a global reporting network that provides a good base for event classification and follow-up in the form of cross functional meetings where this information is reviewed so that appropriate corrective and preventive action can be taken.

Close cooperation with asset owners and the utility industry is also essential and has been one of the cornerstones of the design philosophy. In the 1940's transmission voltages rose to 380 kV and the worlds first 380 kV system was developed for the Swedish national grid. One consequence of this rollout was the adoption of stringent requirements by the utility companies. These covered all aspects of the network and demanded that designs be simple and reliable especially in regard to service and maintenance. The way the technology functioned had to be readily understandable and no special tools were permitted for installation, service and maintenance.

ABB tap changers have been based on this design philosophy ever since and this adherence to simplicity has resulted in designs with fewer parts and lower maintenance costs. Statistically it can be shown that a lower number of parts increases the reliability of tap changers or for that matter any mechanical device. In addition to increased reliability, fewer parts have contributed to a considerable reduction in size.

Worth mentioning is that well over a hundred of the early transformers installed in the Swedish grid in the 1940's are still in operation with their original tap changers.

Traditional Diverter Switch Tap-Changers

The switching mechanism is mounted inside a sealed cylindrical glass fibre reinforced epoxy enclosure that make it possible to separate the oil inside the diverter switch unit from the oil in the transformer. This ensures that oil affected by arcing cannot contaminate the transformer oil.

The tap selector has two separate branches. During operation only one of the tap selector branches is energized. The other branch of the tap selector is free to move to the next tap. An input signal to the motor drive unit makes the selector move to a higher or lower tap whilst loading the energy storage device that drives the diverter switch. The operation is synchronised to ensure that tap selection is completed before the storage device is allowed to release its energy and activate the diverter switch.

The switch is designed to minimize arcing. In Figure 3 the transition of current flow from the one tap to the other is illustrated. The electrical switching sequence takes approximately 50 ms.

During this time the current path changes but is never broken. The transition resistors R_y and R_u share load current and limit circulation current during the movement of the switch contact from x to v.

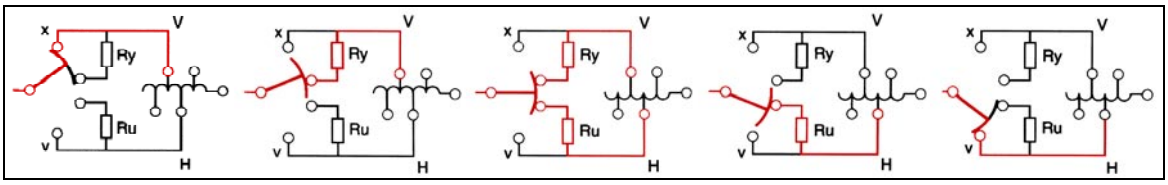

Figure 3
Sequence of steps in diverter switch

The diverter switch mechanism has both moving and fixed contacts. The moving contacts are mounted on a self-locking polygon link system. Extended helical springs are used to actuate the contact arm. The springs are armed while the movable contact assembly is locked in the closed position. Once the springs are fully armed the lock is opened and the whole movable contact arm moves into its other position closing the alternative tap circuit and opening the previous tap circuit. The mechanical energy stored in the springs is sufficient to complete a load commutation operation without any external power supply under all operating conditions. Hydraulic dampers mitigate contact impact as the contacts close.

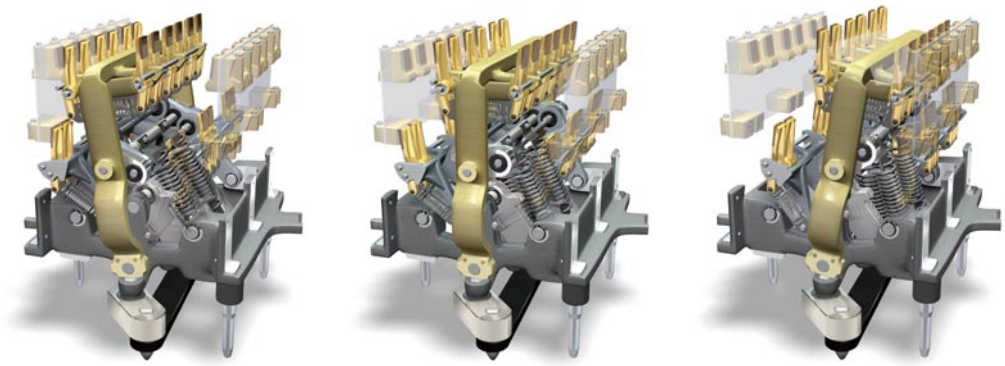

Figure 4
Switching sequence from left to right side of the diverter switch mechanism. When in the centre position the lower contacts on either side are connected through the transition resistors to ensure an uninterrupted current flow.

Wear of contact surfaces due to arcing as well as by-products from the oil cause pollution in the form of particles. Smaller particles will be in suspended form while larger particles will form sludge at the bottom of the diverter housing.

Today's range of diverter switch tap-changers are tried and tested and provide an extremely reliable and predictable technology. The simple and rugged design ensures a service life equal to that of the transformer. Under normal grid conditions even the diverter switch contacts will last as long as the transformer, but in extremely demanding applications where there are an exceptional number switching operations per day these may have to be replaced at some point in time. An overhaul is scheduled every seven years and includes cleaning the mechanism, checking for contact wear, filtering the oil and checking its dielectric strength.

Vacuum Interrupter Technology

In their quest for greater efficiency, alongside concrete targets like improved availability and cost reduction many utilities have now embraced vacuum interrupter technology as an alternative that offers some distinct advantages.

Compared to traditional diverter switch tap-changers there is only minimal contact wear and all residuals caused by arcing are contained within the hermetically sealed vacuum interrupters, Figure 5. This keeps the insulating oil inside the diverter switch compartment clean.

Figure 5
Vacuum tap-changer type VUCG

The advantages to assets owners can be summarized as follows:

- Less maintenance
- Reduced downtime and cleaner maintenance environment
- On-line oil filters become unnecessary even in demanding applications
- Reduced sensitivity to moisture in the tap changer oil since clean oil has greater dielectric strength than contaminated oil.

Furthermore, vacuum interrupters have several technical advantages thanks to their fast dielectric recovery. This facilitates better optimization of tap-changers for each application and thus improves cost effectiveness and reduces the overall size of the transformer.
These are:

- Improved arc quenching capability in demanding applications such as, phase shifting transformers, series reactors, industrial transformers and SVC transformers
- HVDC converter transformers where steep zero crossing current curves translate into a need for greater contact gaps in traditional technology.

As suggested earlier the diverter switch tap changers represent the most versatile type of tap changers available which is why the in-tank diverter switch type UC is the first line of tap changers being offered with a vacuum interrupter mechanism as an alternative to the traditional technology.

The same service and maintenance philosophy regarding simplicity and absence of special tools and equipment characterizes the design of vacuum interrupter products. Bear in mind however that vacuum based technology is inherently more complex than traditional technology.

Compatibility with existing installations and the facilitation of retrofitting are cornerstones of the design philosophy. There are tens of thousands of existing installations that stand to benefit from the introduction of vacuum interrupter technology. Customers who choose to migrate will discover that all UCG type (and in the near future UCL) tap changers are easy to upgrade swapping only the diverter switch mechanism, an exercise no more complicated than a standard field overhaul. This is a very economical form of investment protection.

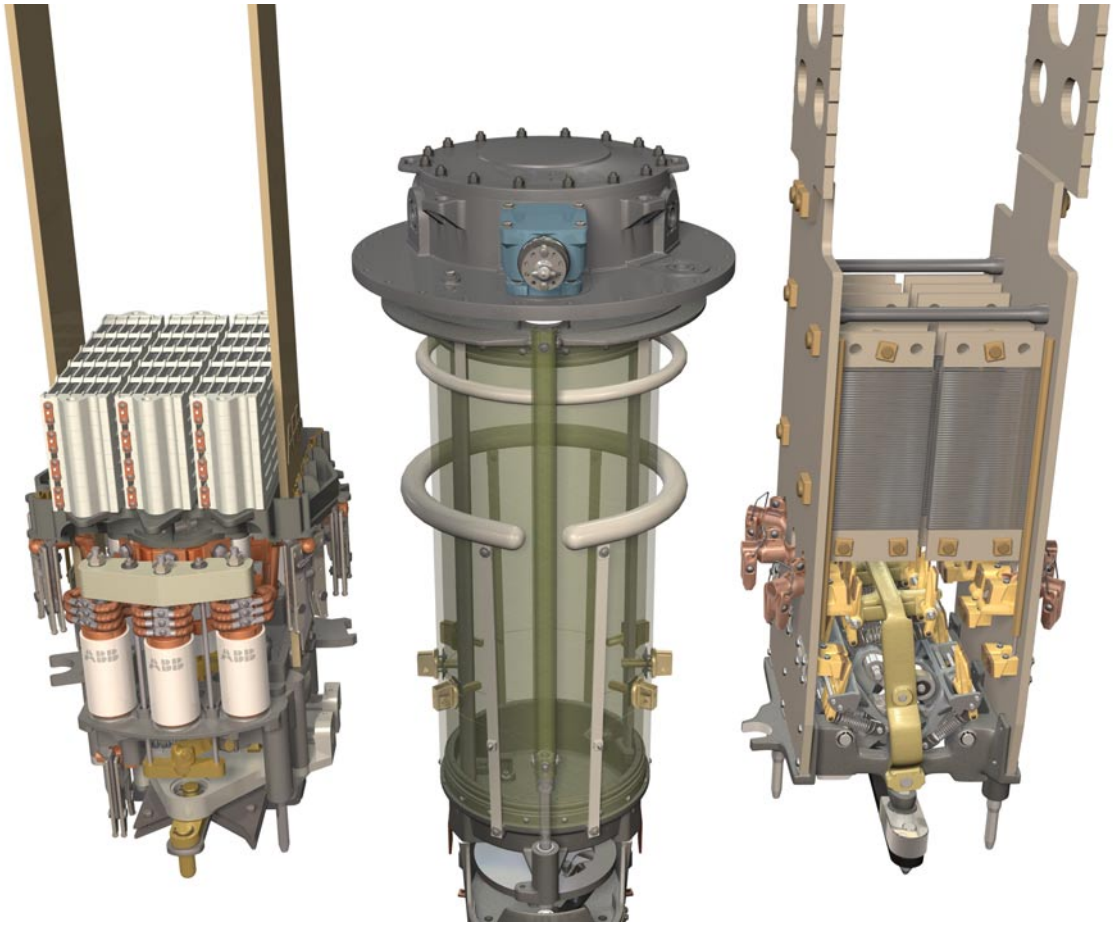

Figure 6
Full interchangeability of the diverter switch mechanism in existing transformers equipped with UC type tap-changers makes it easy to upgrade in the field.

Design of the Vacuum Diverter Switch Mechanism

By using an auxiliary contact system (MC, RC) in combination with the vacuum interrupters (MVI, RVI) only two vacuum interrupters are required per phase.

The first illustration below shows the current path during normal operation, from x to the star point (could also be to the next phase). When commuting the load from x to v, the first part of the operation sequence is to open the main vacuum interrupter (MVI) and hence let the current flow through the transition resistor (TR), illustration 2. The main contact (MC) is then rotated (illustration 3 and 4) in order to connect to v. The main vacuum interrupter then closes, leading to an associated circulating current driven by the difference in voltage potential, see illustration 5. In illustration 6, the transition resistor is disconnected when opening the resistor vacuum interrupters (RVI). The load current is now via the normal path from v to the star point. The resistor contact (RC) is then rotated and put in position according to illustration 7. Finally, the sequence is completed and next service position is reached when the resistor vacuum interrupter is closed, see illustration 8.

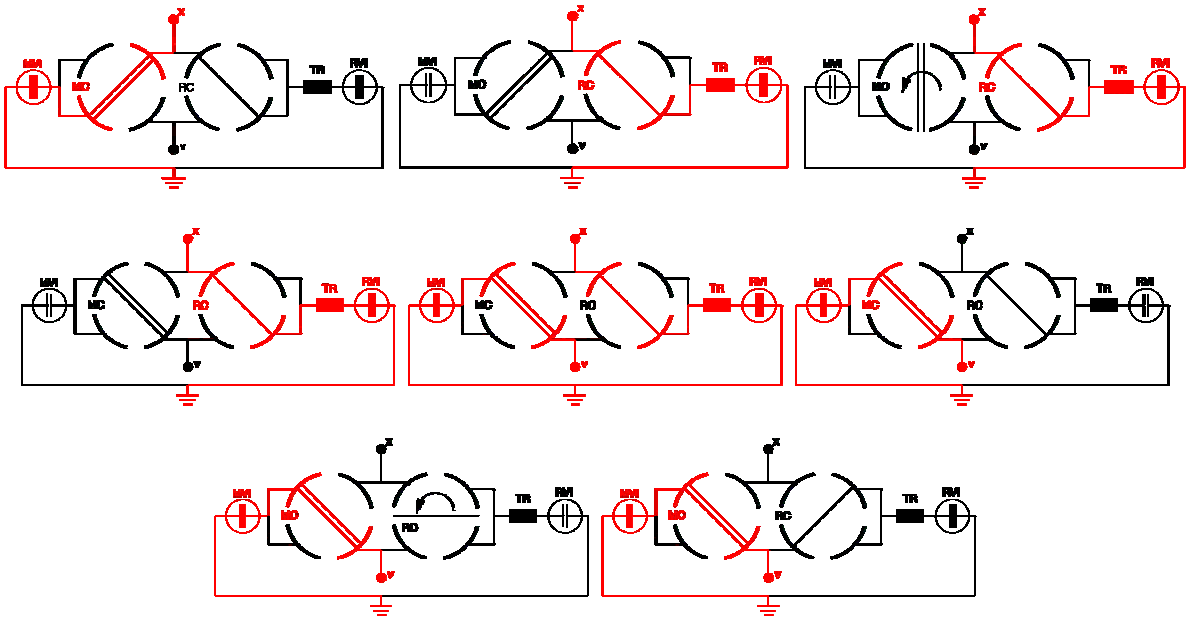

Figure 7
Electrical circuit, single-phase.

The key components, the vacuum bottles, build on 25 years of experience and millions of successfully delivered units and provide for an extremely reliable product, however in the unlikely event of vacuum interrupter failure the auxiliary contact system is designed to carry out a certain number of tap operations by themselves and trigger a protective relay alarm.
The auxiliary contact system consists of two sets of rotating contacts – Main Contact (MC) and Resistance Contact (RC) – and one set of fixed contacts where the central contacts are common to MC and RC. See Figure 8.

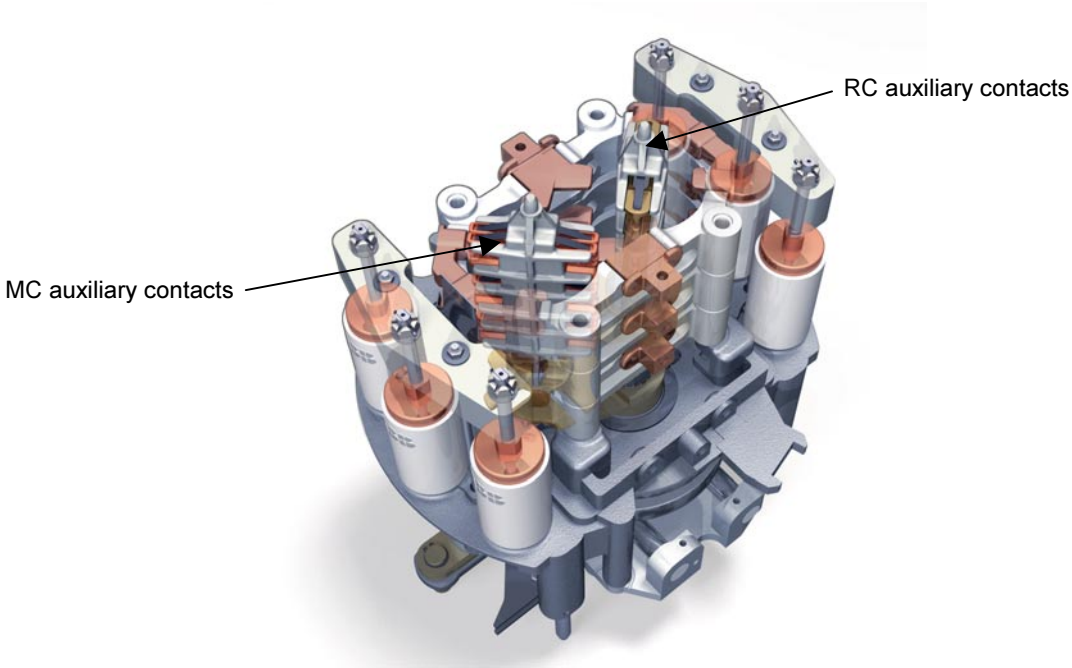

Figure 8
Auxiliary contact system

An overview of the mechanical design is shown in Figure 9. The Spring Drive Unit (SDU) converts the slow motion of the drive disc to the fast motion required for switching the contacts and also provides the synchronisation required. The fact that energy is stored in springs ensures the switching cycle will be completed even if the power supply fails. Independent of whether the motor drive starts a raising or lowering manoeuvre, the SDU will always be aligned in the same direction i.e. unidirectional.

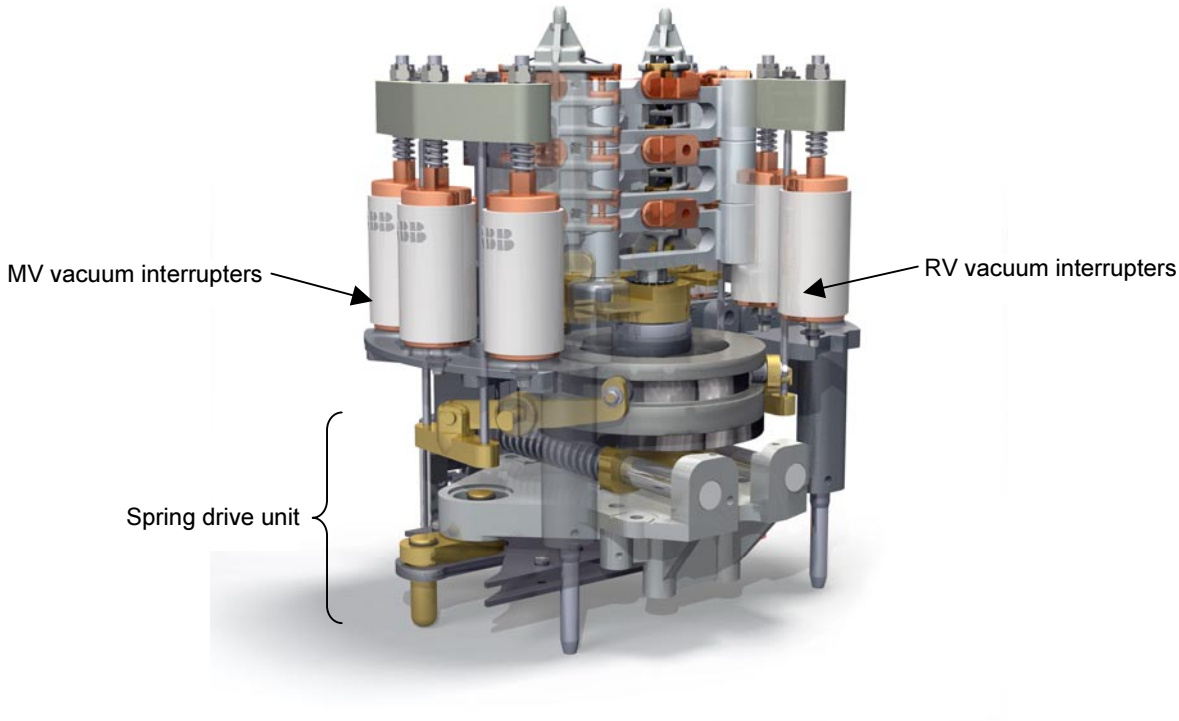

Figure 9
Diverter switch overview

Vacuum interrupters
Because of the extremely low internal pressure in vacuum interrupters, only a small contact gap is required to achieve a high dielectric strength. The short arcing time generates less energy, which together with a high rate of metal vapor re-condensation minimizes the contact wear. However, in some applications, vacuum interrupters are known to cause transient overvoltages. The cause of the transient overvoltages is not dependent on the properties of the vacuum interrupters alone because interaction between the vacuum interrupter and the electrical system also contribute to this phenomenon.

Current chopping. Generally speaking, current chopping occurs when a breaker opens and an arc is ignited between the contacts. The arc is extinguished when the current reaches the zero crossing point, however, due to the instability of the arc as the current approaches zero, it could suddenly be interrupted just before the natural zero crossing. See Figure 10.

Current chopping traps the magnetic energy in the inductance on the load side and could cause transient overvoltages when interrupting inductive loads. The magnetic energy depends on the magnitude of the current at the moment when the chopping occurs, as well as on the inductance. The trapped magnetic energy will oscillate between the inductance and the capacitance of the load side of the switch and the magnetic energy will transfer electrostatic energy to the capacitor.

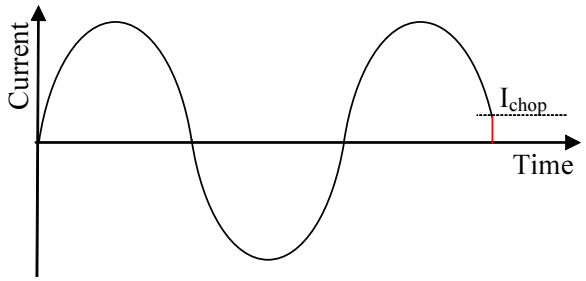

Figure 10
Example of current chopping

The magnitude of the overvoltage caused by current chopping can easily be calculated for the simple circuit in Figure 11, however transformer windings are more complicated and computer simulations are required. It is important to remember also the electrical circuit in figure 7; the load current is never switched off, only commuted from one path to another (illustration 1-2). The vacuum interrupters just disconnects a small part of the winding and the associated circulating current (illustration 5-6) at a voltage between the contacts being just a fraction of the system voltages in a medium-voltage application where vacuum interrupters are known to have caused transient overvoltages.

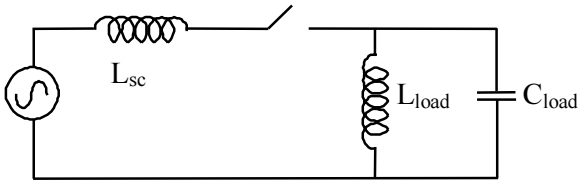

Figure 11
Equivalent circuit for interruption of inductive load.

Computer simulations. The highest voltage caused by current chopping occurs in coarse/fine regulation. The reason for this is the relatively large inductance of the coarse winding compared to one regulating step of the fine winding, as well as from the fact that the capacitance across the coarse winding is lower than for one regulating step of the fine winding. A comprehensive computer model of a transformer including the regulating winding and the on-load tap-changer has been developed. The properties of the vacuum interrupter were also crucial for the validity of the performed simulations and required extensive testing of the key components before performing the computer simulations. The computer simulations were then carried out with three different current chopping values based on the test results; Normal value, high value, as well as twice the highest value.

Results. The result of the computer simulations verifies that current chopping does not cause any harmful transient overvoltages across the coarse regulating winding in the transformer, even if the current chopping level is higher than expected or if the ratio of the inductance and capacitance of the used winding should be higher in any future application. The current chopping causes only a negligible damped high frequency "noise". See Figures 12-14.

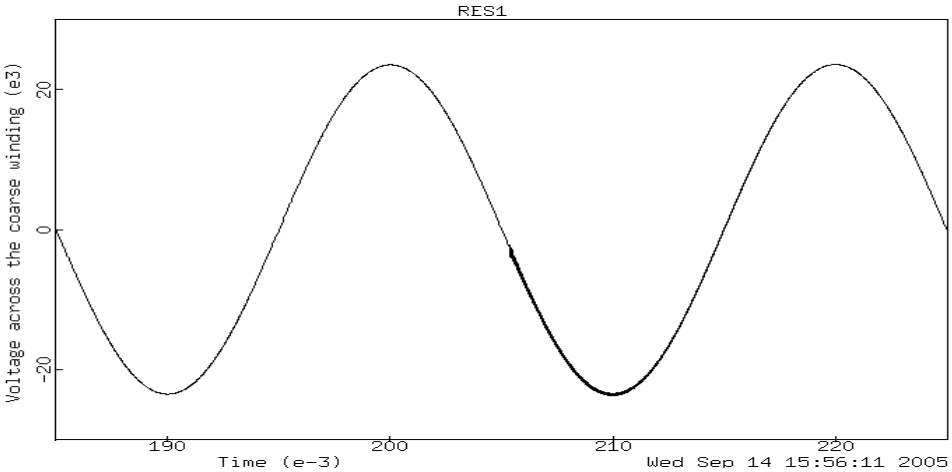

Figure 12
Voltage across the coarse winding when operating the tap-changer at normal current chopping level.

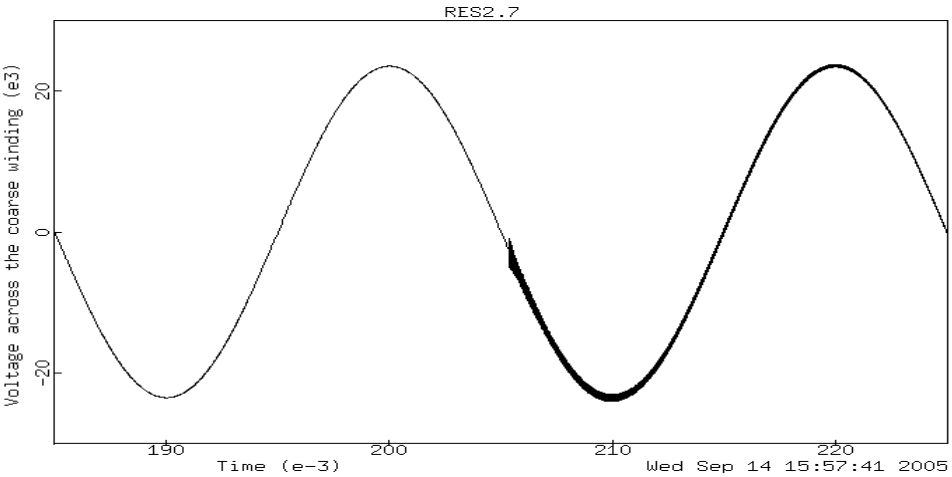

Figure 13
Voltage across the coarse winding when the tap-changer is operated at the highest current chopping level.

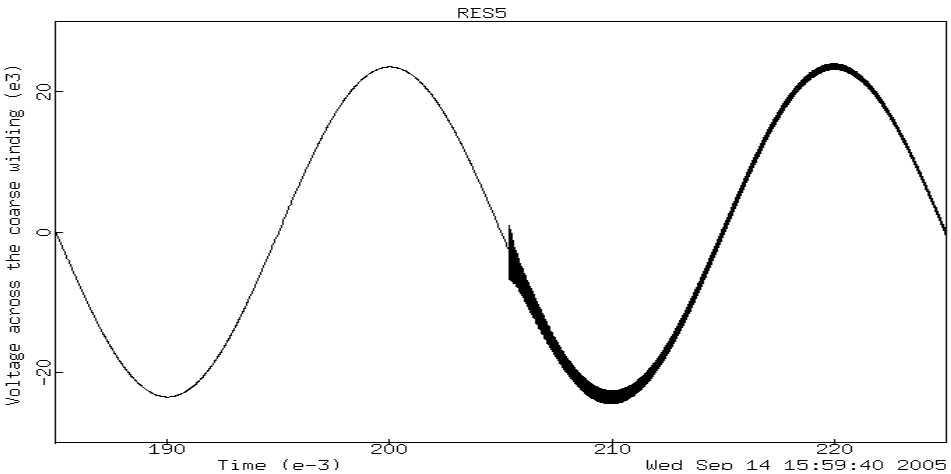

Figure 14
Voltage across the coarse winding when the tap-changer is operated at twice the highest current chopping level.

Re-ignitions. In addition to current chopping, re-ignitions are another possible source of transient overvoltages. The conditions under which re-ignition is most likely to occur are when operating the diverter switch and disconnecting the coarse winding. The contact separation is random with respect to the phase angle of the current, and the separation of the contact is small if the contact starts to open just before the current zero crossing. As a consequence the distance between the opening contacts is too small to withstand the recovery voltage across the contacts. The recovery voltage exceeds the withstand voltage of the contact gap and a re-ignition occurs. This will be repeated until the vacuum interrupter is no longer able to interrupt the current, or the withstand voltage of the contacts is higher than the recovery voltage. In this case the re-ignition causes a damped high frequency current with zero crossing superimposed on the 50/60 Hz power frequency current. The amplitude of the transient voltage is low compared to the 50/60 Hz power frequency across the coarse winding. The conclusion is that multiple re-ignitions do not cause harmful transient overvoltages when using vacuum interrupters in on-load tap-changers, Figure 15.

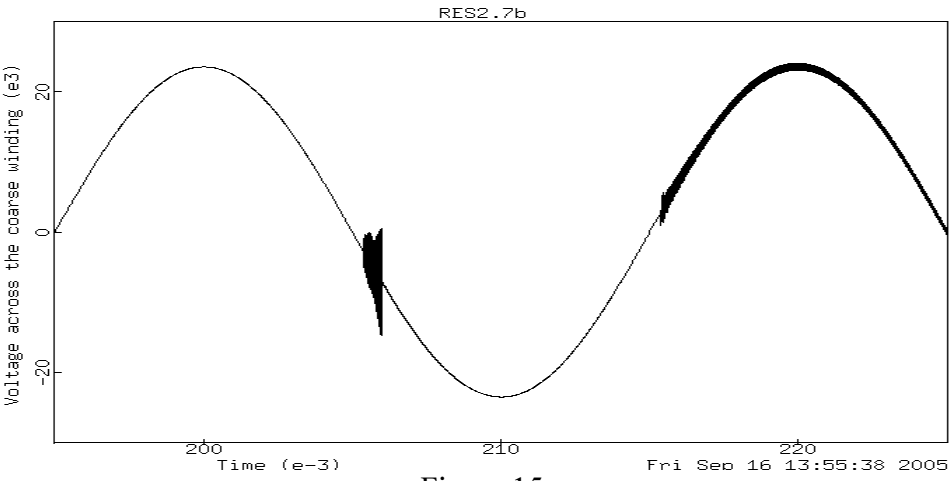

Figure 15
Voltage across the coarse winding during multiple re-ignitions.

Conclusions

The longer the expected lifespan of a product is the more issues like long term support and technical sustainability influence the choices made when investing in new equipment or upgrading existing equipment. Present day diverter switch tap changer technology still serves the industry well and will still be the technology of choice for many. It is however likely that the diminished risk of post service faults and lower cost of ownership that vacuum interrupter based technology offers will eventually lead to its domination of the market.

ABB Power Technologies AB
Components
Visiting address: Lyviksvägen 10
Postal address: SE-771 80 Ludvika, SWEDEN
Tel.+46 240 78 20 00
Fax +46 240 121 57
E-mail: sales@se.abb.com
www.abb.com/electricalcomponents

1ZSC000562-AAC en, 2007-04-15