DRAWING NUMBER
D 2501 8014-019

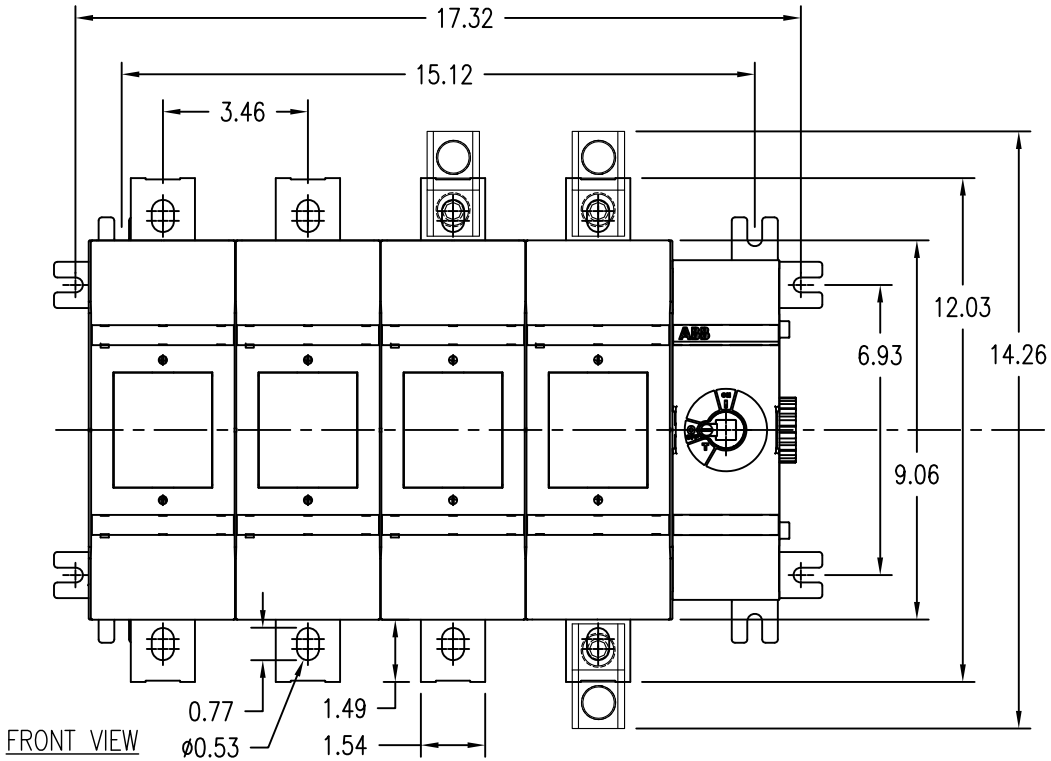

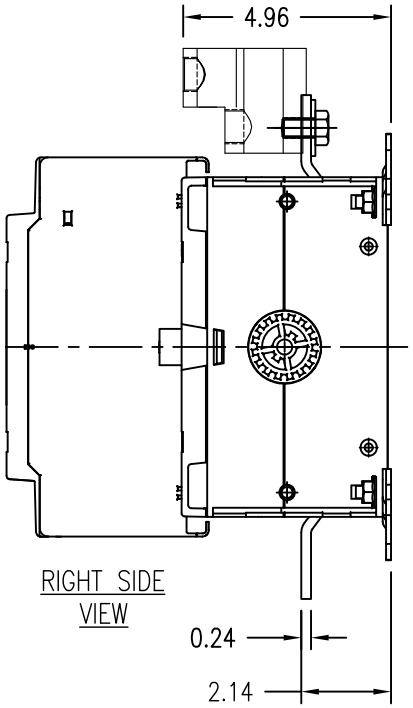

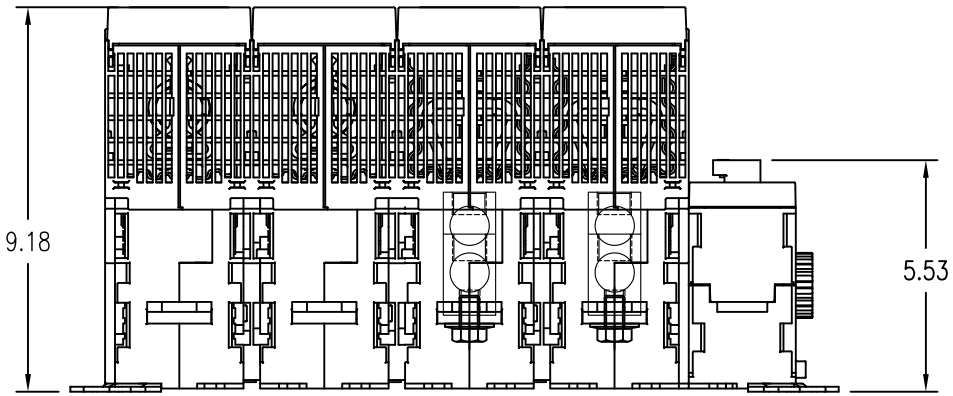

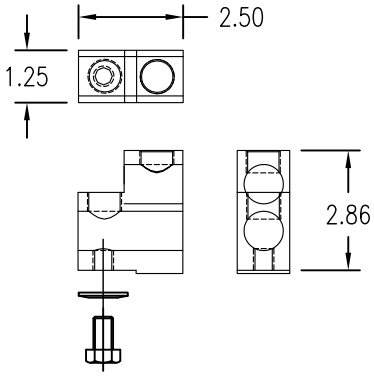

OS600J40
600VAC 600A 4-Pole
Class J Fused Open Type Switch
Rotary operated

cULus Listed, 97C2
Open Type Switch
UL File #E101914

Short Circuit Rating at 600VAC		
kA	Fuse/A	Fuse class
200	600	J

3-phase HP Ratings			
VAC	240	480	600
HP	200	400	500

Accessories:

Operating Handle
OHB175J12 – Type 1, 3R, 12
OHB175L12 – Type 1, 3R, 4, 4X, 12
Ref. drawing D 2301 8001-001 for pistol grip handle dimensions and installation details.

Terminal Lug Kits
OZXA-800 – 8 lugs
Wire Range:
(2) #2 AWG – 600kcmil
AL7CU, UL Listed

Operating Shaft – Max. encl. depth
OXP12X220 – 12.00 in.
OXP12X280 – 14.50 in.
OXP12X325 – 16.30 in.
OXP12X395 – 19.10 in.
OXP12X465 – 21.80 in.
OXP12X625 – 28.10 in.

Auxiliary Contacts
OA1G10 – 1n.o.
OA3G01 – 1n.c.
OEA28 – Module for aux. contacts

REV. LET.	REVISIONS	DATE	REV OR APPD BY

THIS DRAWING IS THE PROPERTY OF ABB Inc. AND CONTAINS PROPRIETARY AND CONFIDENTIAL INFORMATION WHICH MUST NOT BE DUPLICATED, USED OR DISCLOSED OTHER THAN EXPRESSLY AUTHORIZED BY ABB Inc.

ABB Inc.

DATE 10/03/11
DRAWN F. GARCÍA
CHK'D
PROJECT NO.
SHEET 1 OF 1

REV. A
SIZE A

TITLE
OS600J40
4-Pole Class J Fused
Open Type Switch

DRAWING NUMBER
D 2501 8014-019