Relion® Protection and Control

670 series 2.0 IEC
IEC 61850 Edition 2 Communication Protocol Manual

Power and productivity
for a better world™

Document ID: 1MRK 511 303-UEN
Issued: May 2014
Revision: -
Product version: 2.0

© Copyright 2014 ABB. All rights reserved

Copyright

This document and parts thereof must not be reproduced or copied without written permission from ABB, and the contents thereof must not be imparted to a third party, nor used for any unauthorized purpose.

The software and hardware described in this document is furnished under a license and may be used or disclosed only in accordance with the terms of such license.

This product includes software developed by the OpenSSL Project for use in the OpenSSL Toolkit. (http://www.openssl.org/)

This product includes cryptographic software written/developed by: Eric Young (eay@cryptsoft.com) and Tim Hudson (tjh@cryptsoft.com).

Trademarks

ABB and Relion are registered trademarks of the ABB Group. All other brand or product names mentioned in this document may be trademarks or registered trademarks of their respective holders.

Warranty

Please inquire about the terms of warranty from your nearest ABB representative.

Disclaimer

The data, examples and diagrams in this manual are included solely for the concept or product description and are not to be deemed as a statement of guaranteed properties. All persons responsible for applying the equipment addressed in this manual must satisfy themselves that each intended application is suitable and acceptable, including that any applicable safety or other operational requirements are complied with. In particular, any risks in applications where a system failure and/or product failure would create a risk for harm to property or persons (including but not limited to personal injuries or death) shall be the sole responsibility of the person or entity applying the equipment, and those so responsible are hereby requested to ensure that all measures are taken to exclude or mitigate such risks.

This document has been carefully checked by ABB but deviations cannot be completely ruled out. In case any errors are detected, the reader is kindly requested to notify the manufacturer. Other than under explicit contractual commitments, in no event shall ABB be responsible or liable for any loss or damage resulting from the use of this manual or the application of the equipment.

Conformity

This product complies with the directive of the Council of the European Communities on the approximation of the laws of the Member States relating to electromagnetic compatibility (EMC Directive 2004/108/EC) and concerning electrical equipment for use within specified voltage limits (Low-voltage directive 2006/95/EC). This conformity is the result of tests conducted by ABB in accordance with the product standard EN 60255-26 for the EMC directive, and with the product standards EN 60255-1 and EN 60255-27 for the low voltage directive. The product is designed in accordance with the international standards of the IEC 60255 series.

Table of contents

Section 1 Introduction

1.1 This manual

The communication protocol manual describes the communication protocols supported by the IED. The manual concentrates on the vendor-specific implementations.

1.2 Intended audience

This manual addresses the communication system engineer or system integrator responsible for pre-engineering and engineering for communication setup in a substation from an IED perspective.

The system engineer or system integrator must have a basic knowledge of communication in protection and control systems and thorough knowledge of the specific communication protocol.

1.3 Product documentation

1.3.1 Product documentation set

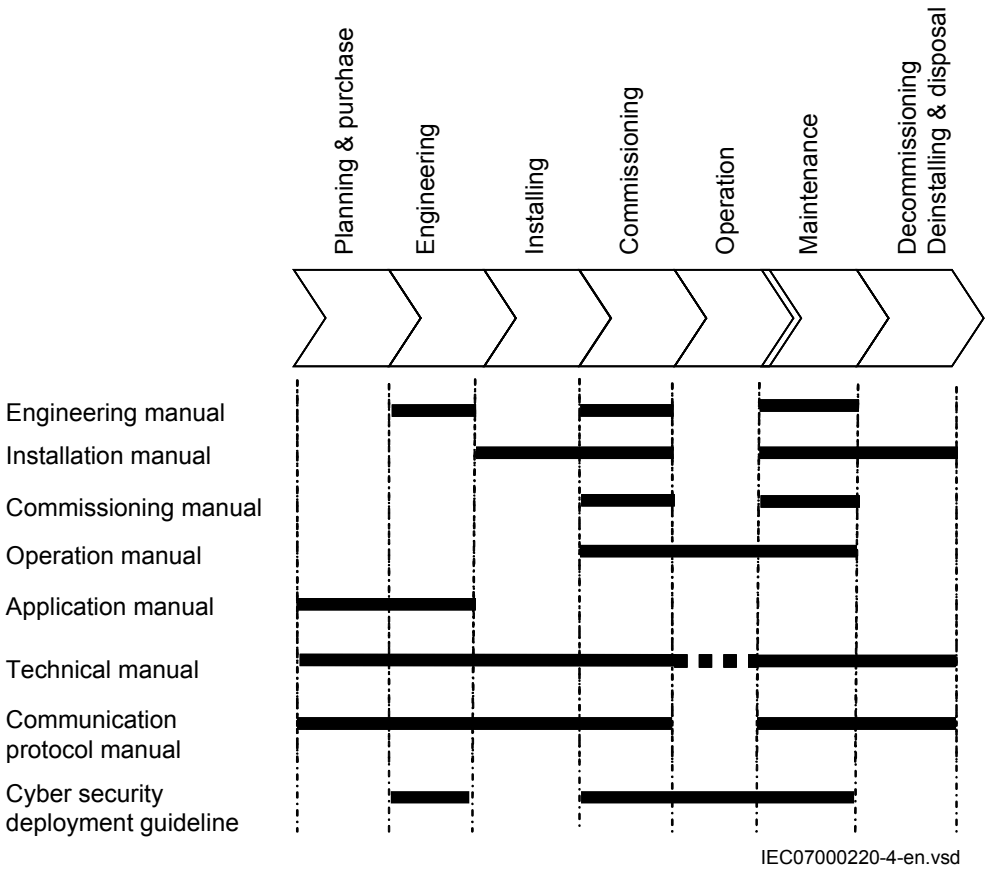

Figure 1: The intended use of manuals throughout the product lifecycle

The engineering manual contains instructions on how to engineer the IEDs using the various tools available within the PCM600 software. The manual provides instructions on how to set up a PCM600 project and insert IEDs to the project structure. The manual also recommends a sequence for the engineering of protection and control functions, LHMI functions as well as communication engineering for IEC 60870-5-103, IEC 61850 and DNP3.

The installation manual contains instructions on how to install the IED. The manual provides procedures for mechanical and electrical installation. The chapters are organized in the chronological order in which the IED should be installed.

The commissioning manual contains instructions on how to commission the IED. The manual can also be used by system engineers and maintenance personnel for assistance during the testing phase. The manual provides procedures for the checking of external circuitry and energizing the IED, parameter setting and

configuration as well as verifying settings by secondary injection. The manual describes the process of testing an IED in a substation which is not in service. The chapters are organized in the chronological order in which the IED should be commissioned. The relevant procedures may be followed also during the service and maintenance activities.

The operation manual contains instructions on how to operate the IED once it has been commissioned. The manual provides instructions for the monitoring, controlling and setting of the IED. The manual also describes how to identify disturbances and how to view calculated and measured power grid data to determine the cause of a fault.

The application manual contains application descriptions and setting guidelines sorted per function. The manual can be used to find out when and for what purpose a typical protection function can be used. The manual can also provide assistance for calculating settings.

The technical manual contains application and functionality descriptions and lists function blocks, logic diagrams, input and output signals, setting parameters and technical data, sorted per function. The manual can be used as a technical reference during the engineering phase, installation and commissioning phase, and during normal service.

The communication protocol manual describes the communication protocols supported by the IED. The manual concentrates on the vendor-specific implementations.

The point list manual describes the outlook and properties of the data points specific to the IED. The manual should be used in conjunction with the corresponding communication protocol manual.

The cyber security deployment guideline describes the process for handling cyber security when communicating with the IED. Certification, Authorization with role based access control, and product engineering for cyber security related events are described and sorted by function. The guideline can be used as a technical reference during the engineering phase, installation and commissioning phase, and during normal service.

1.3.2 Document revision history

Document revision/date	History
-/May 2014	First release

1.3.3 Related documents

Documents related to REB670	Identify number
Application manual	1MRK 505 302-UEN
Commissioning manual	1MRK 505 304-UEN
Product guide	1MRK 505 305-BEN
Technical manual	1MRK 505 303-UEN
Type test certificate	1MRK 505 305-TEN

Documents related to REC670	Identify number
Application manual	1MRK 511 310-UEN
Commissioning manual	1MRK 511 312-UEN
Product guide	1MRK 511 313-BEN
Technical manual	1MRK 511 311-UEN
Type test certificate	1MRK 511 313-TEN

Documents related to RED670	Identify number
Application manual	1MRK 505 307-UEN
Commissioning manual	1MRK 505 309-UEN
Product guide	1MRK 505 310-BEN
Technical manual	1MRK 505 308-UEN
Type test certificate	1MRK 505 310-TEN

Documents related to REG670	Identify number
Application manual	1MRK 502 051-UEN
Commissioning manual	1MRK 502 053-UEN
Product guide	1MRK 502 054-BEN
Technical manual	1MRK 502 052-UEN
Type test certificate	1MRK 502 054-TEN

Documents related to REL670	Identify number
Application manual	1MRK 506 338-UEN
Commissioning manual	1MRK 506 340-UEN
Product guide	1MRK 506 341-BEN
Technical manual	1MRK 506 339-UEN
Type test certificate	1MRK 506 341-TEN

Documents related to RET670	Identify number
Application manual	1MRK 504 138-UEN
Commissioning manual	1MRK 504 140-UEN
Product guide	1MRK 504 141-BEN
Technical manual	1MRK 504 139-UEN
Type test certificate	1MRK 504 141-TEN

670 series manuals	Identify number
Operation manual	1MRK 500 118-UEN
Engineering manual	1MRK 511 308-UEN
Installation manual	1MRK 514 019-UEN
Communication protocol manual, IEC 60870-5-103	1MRK 511 304-UEN
Communication protocol manual, IEC 61850 Edition 1	1MRK 511 302-UEN
Communication protocol manual, IEC 61850 Edition 2	1MRK 511 303-UEN
Communication protocol manual, LON	1MRK 511 305-UEN
Communication protocol manual, SPA	1MRK 511 306-UEN
Accessories guide	1MRK 514 012-BEN
Cyber security deployment guideline	1MRK 511 309-UEN
Connection and Installation components	1MRK 513 003-BEN
Test system, COMBITEST	1MRK 512 001-BEN

1.4 Document symbols and conventions

1.4.1 Symbols

The caution icon indicates important information or warning related to the concept discussed in the text. It might indicate the presence of a hazard which could result in corruption of software or damage to equipment or property.

The information icon alerts the reader of important facts and conditions.

The tip icon indicates advice on, for example, how to design your project or how to use a certain function.

Although warning hazards are related to personal injury, it is necessary to understand that under certain operational conditions, operation of damaged equipment may result in degraded process performance leading to personal injury or death. It is important that the user fully complies with all warning and cautionary notices.

1.4.2 Document conventions

- Abbreviations and acronyms in this manual are spelled out in the glossary. The glossary also contains definitions of important terms.
- Push button navigation in the LHMI menu structure is presented by using the push button icons.
  For example, to navigate between the options, use ↑ and ↓.
- HMI menu paths are presented in bold.
  For example, select **Main menu/Settings**.
- LHMI messages are shown in Courier font.
  For example, to save the changes in non-volatile memory, select `Yes` and press ↵.
- Parameter names are shown in italics.
  For example, the function can be enabled and disabled with the *Operation* setting.
- Each function block symbol shows the available input/output signal.
  - the character ^ in front of an input/output signal name indicates that the signal name may be customized using the PCM600 software.
  - the character * after an input/output signal name indicates that the signal must be connected to another function block in the application configuration to achieve a valid application configuration.
- Logic diagrams describe the signal logic inside the function block and are bordered by dashed lines.
  - Signals in frames with a shaded area on their right hand side represent setting parameter signals that are only settable via the PST or LHMI.
  - If an internal signal path cannot be drawn with a continuous line, the suffix -int is added to the signal name to indicate where the signal starts and continues.
  - Signal paths that extend beyond the logic diagram and continue in another diagram have the suffix ”-cont.”

1.4.3 Functions included in 670 series IEDs

Table 1: Main protection functions

IEC 61850 or function name	ANSI	Description
Differential protection		
BBP3PH4B	87B	Busbar differential protection, 2 zones, three phase/4 bays Package including functions BUTPTRC_B1-BUTPTRC_B4, BCZTPDIF, BZNTPDIF_A, BZNTPDIF_B, BZITGGIO, BUTSM4
BBP3PH8B	87B	Busbar differential protection, 2 zones, three phase/8 bays Package including functions BUTPTRC_B1-BUTPTRC_B8, BCZTPDIF, BZNTPDIF_A, BZNTPDIF_B, BZITGGIO, BUTSM8
BBP1PH12B	87B	Busbar differential protection, 2 zones, single phase/12 bays Package including functions BUSPTRC_B1-BUSPTRC_B12, BCZSPDIF, BZNSPDIF_A, BZNSPDIF_B, BZISGGIO, BUSSM12
BBP1PH24B	87B	Busbar differential protection, 2 zones, single phase/24 bays Package including functions BUSPTRC_B1-BUSPTRC_B24, BCZSPDIF, BZNSPDIF_A, BZNSPDIF_B, BZISGGIO, BUSSM24
BDCGAPC	87B	Status of primary switching object for busbar protection zone selection
T2WPDIF	87T	Transformer differential protection, two winding
T3WPDIF	87T	Transformer differential protection, three winding
HZPDIF	87	1Ph High impedance differential protection
GENPDIF	87G	Generator differential protection
REFPDIF	87N	Restricted earth fault protection, low impedance
L3CPDIF	87L	Line differential protection, 3 CT sets, 23 line ends
L6CPDIF	87L	Line differential protection, 6 CT sets, 35 line ends
LT3CPDIF	87LT	Line differential protection 3 CT sets, with inzone transformers, 23 line ends
LT6CPDIF	87LT	Line differential protection 6 CT sets, with inzone transformers, 35 line ends
LDLPSCH	87L	Line differential coordination function
LDRGFC	11REL	Additional security logic for differential protection
Impedance protection		
ZMQAPDIS, ZMQPDIS	21	Distance protection zone, quadrilateral characteristic
ZDRDIR	21D	Directional impedance quadrilateral
ZMCPDIS, ZMCAPDIS	21	Distance measuring zone, quadrilateral characteristic for series compensated lines
ZDSRDIR	21D	Directional impedance quadrilateral, including series compensation
FDPSPDIS	21	Phase selection, quadrilateral characteristic with fixed angle
ZMHPDIS	21	Full-scheme distance protection, mho characteristic
ZMMPDIS, ZMMAPDIS	21	Fullscheme distance protection, quadrilateral for earth faults
ZDMRDIR	21D	Directional impedance element for mho characteristic
ZDARDIR		Additional distance protection directional function for earth faults
ZSMGAPC		Mho Impedance supervision logic
FMPSPDIS	21	Faulty phase identification with load enchroachment
ZMRPDIS, ZMRAPDIS	21	Distance protection zone, quadrilateral characteristic, separate settings
FRPSPDIS	21	Phase selection, quadrilateral characteristic with settable angle

Table continues on next page

IEC 61850 or function name	ANSI	Description
ZMFPDIS	21	High speed distance protection
ZMFCPDIS	21	High speed distance protection for series compensated lines
ZMCAPDIS		Additional distance measuring zone, quadrilateral characteristic
ZMRPSB	68	Power swing detection
PSLPSCH		Power swing logic
PSPPPAM	78	Pole slip/out-of-step protection
OOSPPAM	78	Out-of-step protection
ZCVPSOF		Automatic switch onto fault logic, voltage and current based
LEXPDIS	40	Loss of excitation
PPLPHIZ		Phase preference logic
ROTIPHIZ	64R	Sensitive rotor earth fault protection, injection based
STTIPHIZ	64S	100% stator earth fault protection, injection based
ZGVPDIS	21	Underimpedance protection for generators and transformers

Table 2: Backup protection functions

IEC 61850 or function name	ANSI	Description
Current protection		
PHPIOC	50	Instantaneous phase overcurrent protection
OC4PTOC	51_67	Four step phase overcurrent protection
PH4SPTOC	51	Four step single phase overcurrent protection
EFPIOC	50N	Instantaneous residual overcurrent protection
EF4PTOC	51N_67N	Four step residual overcurrent protection
NS4PTOC	46I2	Four step directional negative phase sequence overcurrent protection
SDEPSDE	67N	Sensitive directional residual over current and power protection
LCPTTR	26	Thermal overload protection, one time constant, Celsius
LFPTTR	26	Thermal overload protection, one time constant, Fahrenheit
TRPTTR	49	Thermal overload protection, two time constants
CCRBRF	50BF	Breaker failure protection
CCSRBRF	50BF	Breaker failure protection, single phase version
STBPTOC	50STB	Stub protection
CCPDSC	52PD	Pole discordance protection
GUPPDUP	37	Directional underpower protection
GOPPDOP	32	Directional overpower protection
BRCPTOC	46	Broken conductor check
CBPGAPC		Capacitor bank protection
NS2PTOC	46I2	Negative sequence time overcurrent protection for machines
AEGPVOC	50AE	Accidental energizing protection for synchronous generator
Table continues on next page		

IEC 61850 or function name	ANSI	Description
VRPVOC	51V	Voltage restrained overcurrent protection
GSPTTR	49S	Stator overload protection
GRPTTR	49R	Rotor overload protection
Voltage protection		
UV2PTUV	27	Two step undervoltage protection
OV2PTOV	59	Two step overvoltage protection
ROV2PTOV	59N	Two step residual overvoltage protection
OEXPVPH	24	Overexcitation protection
VDCPTOV	60	Voltage differential protection
STEFPHIZ	59THD	100% Stator earth fault protection, 3rd harmonic based
LOVPTUV	27	Loss of voltage check
PAPGAPC	27	Radial feeder protection
Frequency protection		
SAPTUF	81	Underfrequency protection
SAPTOF	81	Overfrequency protection
SAPFRC	81	Rate-of-change frequency protection
FTAQFVR	81A	Frequency time accumulation protection
Multipurpose protection		
CVGAPC		General current and voltage protection

Table 3: Control and monitoring functions

IEC 61850 or function name	ANSI	Description
Control		
SESRSYN	25	Synchrocheck, energizing check, and synchronizing
SMBRREC	79	Autorecloser
TR1ATCC	90	Automatic voltage control for tap changer, single control
TR8ATCC	90	Automatic voltage control for tap changer, parallel control
TCMYLTC	84	Tap changer control and supervision, 6 binary inputs
TCLYLTC	84	Tap changer control and supervision, 32 binary inputs
SLGAPC		Logic Rotating Switch for function selection and LHMI presentation
VSGAPC		Selector mini switch
DPGAPC		Generic communication function for Double Point indication
SPC8GAPC		Single Point Generic Control 8 signals
AUTOBITS		AutomationBits, command function for DNP3.0
SINGLECMD		Single command, 16 signals Command function block for LON and SPA
VCTRSEND		Horizontal communication via GOOSE for VCTR
GOOSEVCTRRCV		Horizontal communication via GOOSE for VCTR

Table continues on next page

IEC 61850 or function name	ANSI	Description
I103CMD		Function commands for IEC60870-5-103
I103GENCMD		Function commands generic for IEC60870-5-103
I103POSCMD		IED commands with position and select for IEC60870-5-103
I103IEDCMD		IED commands for IEC60870-5-103
I103USRCMD		Function commands user defined for IEC60870-5-103
Apparatus control and interlocking		
SCILO	3	Logical node for interlocking
BB_ES	3	Interlocking for busbar earthing switch
A1A2_BS	3	Interlocking for bus-section breaker
A1A2_DC	3	Interlocking for bus-section disconnector
ABC_BC	3	Interlocking for bus-coupler bay
BH_CONN	3	Interlocking for 1 1/2 breaker diameter
BH_LINE_A	3	Interlocking for 1 1/2 breaker diameter
BH_LINE_B	3	Interlocking for 1 1/2 breaker diameter
DB_BUS_A	3	Interlocking for double CB bay
DB_BUS_B	3	Interlocking for double CB bay
DB_LINE	3	Interlocking for double CB bay
ABC_LINE	3	Interlocking for line bay
AB_TRAFO	3	Interlocking for transformer bay
SCSWI		Switch controller
SXCBR		Circuit breaker
SXSWI		Switch controller
RESIN1		Reservation input 1
RESIN2		Reservation input 2
POS_EVAL		Evaluation of position indication
QCRSV		Bay reservation
QCBAY		Apparatus control Function for handling the status of Local/Remote switch
LOCREM		Handling of LRswitch positions
LOCREMCTRL		LHMI control of PSTO Function for handling Internal Local/Remote switch
Secondary system supervision		
CCSSPVC	87	Current circuit supervision
FUFSPVC		Fuse failure supervision
VDSPVC	60	Fuse failure supervision based on voltage difference
Logic		
SMPPTRC	94	Tripping logic
TMAGAPC		Trip matrix logic
ALMCALH		Logic for group alarm
WRNCALH		Logic for group warning
Table continues on next page		

IEC 61850 or function name	ANSI	Description
INDCALH		Logic for group indication
AND		Configurable logic blocks, AND
OR		Configurable logic blocks, OR
INV		Configurable logic blocks, inverter
PULSETIMER		Configurable logic blocks, PULSETIMER
GATE		Configurable logic blocks, controllable gate
TIMERSET		Configurable logic blocks, timer
XOR		Configurable logic blocks, exclusive OR
LLD		Configurable logic blocks, LLD
SRMEMORY		Configurable logic blocks, set-reset memory
RSMEMORY		Configurable logic blocks, reset-set memory
ANDQT		Configurable logic blocks Q/T, ANDQT
ORQT		Configurable logic blocks Q/T, ORQT
INVERTERQT		Configurable logic blocks Q/T, INVERTERQT
XORQT		Configurable logic blocks Q/T, XORQT
SRMEMORYQT		Configurable logic Q/T, set-reset with memory
RSMEMORYQT		Configurable logic Q/T, reset-set with memory
TIMERSETQT		Configurable logic Q/T, settable timer
PULSETIMERQT		Configurable logic Q/T, pulse timer
INVALIDQT		Configurable logic Q/T, INVALIDQT
INDCOMBSPQT		Configurable logic Q/T, single-indication signal combining
INDEXTSPQT		Configurable logic Q/T, single-indication signal extractor
FXDSIGN		Fixed signal function block
B16I		Boolean 16 to Integer conversion
BTIGAPC		Boolean 16 to Integer conversion with Logic Node representation
IB16		Integer to Boolean 16 conversion
ITBGAPC		Integer to Boolean 16 conversion with Logic Node representation
TIGAPC		Delay on timer with input signal integration
TEIGAPC		Elapsed time integrator with limit transgression and overflow supervision
Monitoring		
CVMMXN, CMMXU, VMMXU, CMSQI VMSQI, VNMMXU		Measurements
AISVBAS		Function block for service value presentation of secondary analog inputs
SSIMG	63	Gas medium supervision
SSIML	71	Liquid medium supervision
SSCBR		Circuit breaker condition monitoring
EVENT		Event function Function for event reporting for LON and SPA

Table continues on next page

IEC 61850 or function name	ANSI	Description
DRPRDRE, A1RADR-A4RADR, B1RBDR-B6RBDR		Disturbance report
SPGAPC		Generic communication function for Single Point indication
SP16GAPC		Generic communication function for Single Point indication 16 inputs
MVGAPC		Generic communication function for Measured Value
BINSTATREP		Logical signal status report
RANGE_XP		Measured value expander block
LMBRFLO		Fault locator
I103MEAS		Measurands for IEC60870-5-103
I103MEASUSR		Measurands user defined signals for IEC60870-5-103
I103AR		Function status auto-recloser for IEC60870-5-103
I103EF		Function status earth-fault for IEC60870-5-103
I103FLTPROT		Function status fault protection for IEC60870-5-103
I103IED		IED status for IEC60870-5-103
I103SUPERV		Supervison status for IEC60870-5-103
I103USRDEF		Status for user defiend signals for IEC60870-5-103
L4UFCNT		Event counter with limit supervision
Metering		
PCFCNT		Pulse-counter logic
ETPMMTR		Function for energy calculation and demand handling
System protection and control		
SMAIHPAC		Multipurpose filter

Table 4: Station communication functions

IEC 61850 or function name	ANSI	Description
Station communication		
SPA		SPA communication protocol
ADE		LON communciation protocol
PROTOCOL		Operation selection between SPA and IEC60870-5-103 for SLM
CHSERRS485		DNP3.0 for TCP/IP and EIA-485 communication protocol
DNPFREC		DNP3.0 fault records for TCP/IP and EIA-485 communication protocol
IEC61850-8-1		Parameter setting function for IEC61850
GOOSEINTLKRCV		Horizontal communication via GOOSE for interlocking
GOOSEBINRCV		Goose binary receive
GOOSEDPRCV		GOOSE function block to receive a double point value
GOOSEINTRCV		GOOSE function block to receive an integer value
GOOSEMVRCV		GOOSE function block to receive a measurand value
Table continues on next page		

IEC 61850 or function name	ANSI	Description
GOOSESPRCV		GOOSE function block to receive a single point value
GOOSEVCTRCONF		GOOSE VCTR configuration for send and receive
VCTRSEND		Horizontal communication via GOOSE for VCTR
GOOSEVCTRRCV		Horizontal communication via GOOSE for VCTR
MULTICMDRCV, MULTICMDSND		Multiple command and transmit
FRONT, LANABI, LANAB, LANCDI, LANCD		Ethernet configuration of links
MU1_4I_4U MU2_4I_4U MU3_4I_4U MU4_4I_4U MU5_4I_4U MU6_4I_4U		Process bus communication IEC61850-9-2
PRP		Duo driver configuration
Scheme communication		
ZCPSCH	85	Scheme communication logic for distance or overcurrent protection
ZC1PPSCH	85	Phase segregated Scheme communication logic for distance protection
ZCRWPSCH	85	Current reversal and weak-end infeed logic for distance protection
ZC1WPSCH	85	Current reversal and weak-end infeed logic for phase segregated communication
ZCLCPSCH		Local acceleration logic
ECPSCH	85	Scheme communication logic for residual overcurrent protection
ECRWPSCH	85	Current reversal and weak-end infeed logic for residual overcurrent protection
Direct transfer trip		
LAPPGAPC	37_55	Low active power and power factor protection
COUVGAPC	59_27	Compensated over- and undervoltage protection
SCCVPTOC	51	Sudden change in current variation
LCCRPTRC	94	Carrier receive logic
LCNSPTOV	47	Negative sequence overvoltage protection
LCZSPTOV	59N	Zero sequence overvoltage protection
LCNSPTOC	46	Negative sequence overcurrent protection
LCZSPTOC	51N	Zero sequence overcurrent protection
LCP3PTOC	51	Three phase overcurrent
LCP3PTUC	37	Three phase undercurrent

Table 5: Basic IED functions

IEC 61850 or function name	Description
INTERRSIG	Self supervision with internal event list
SELFSUPEVLST	Self supervision with internal event list
TIMESYNCHGEN	Time synchronization module
Table continues on next page	

IEC 61850 or function name	Description
SYNCHBIN, SYNCHCAN, SYNCHCMPPS, SYNCHLON, SYNCHPPH, SYNCHPPS, SYNCHSNTP, SYNCHSPA, SYNCHCMPPS	Time synchronization
TIMEZONE	Time synchronization
DSTBEGIN, DSTENABLE, DSTEND	GPS time synchronization module
IRIG-B	Time synchronization
SETGRPS	Number of setting groups
ACTVGRP	Parameter setting groups
TESTMODE	Test mode functionality
CHNGLCK	Change lock function
SMBI	Signal matrix for binary inputs
SMBO	Signal matrix for binary outputs
SMMI	Signal matrix for mA inputs
SMAI1 - SMAI20	Signal matrix for analog inputs
3PHSUM	Summation block 3 phase
ATHSTAT	Authority status
ATHCHCK	Authority check
AUTHMAN	Authority management
FTPACCS	FTP access with password
SPACOMMMAP	SPA communication mapping
SPATD	Date and time via SPA protocol
DOSFRNT	Denial of service, frame rate control for front port
DOSLANAB	Denial of service, frame rate control for OEM port AB
DOSLANCD	Denial of service, frame rate control for OEM port CD
DOSSCKT	Denial of service, socket flow control
GBASVAL	Global base values for settings
PRIMVAL	Primary system values
ALTMS	Time master supervision
ALTIM	Time management
ALTRK	Service tracking
ACTIVLOG	Activity logging parameters
FSTACCS	Field service tool access via SPA protocol over ethernet communication
PCMACCS	IED Configuration Protocol
SECALARM	Component for mapping security events on protocols such as DNP3 and IEC103
DNPGEN	DNP3.0 communication general protocol

Table continues on next page

IEC 61850 or function name	Description
DNPGENTCP	DNP3.0 communication general TCP protocol
CHSEROPT	DNP3.0 for TCP/IP and EIA-485 communication protocol
MSTSER	DNP3.0 for serial communication protocol
OPTICAL103	IEC60870-5-103 Optical serial communication
RS485103	IEC60870-5-103 serial communication for RS485
IEC61850-8-1	Parameter setting function for IEC61850
HORZCOMM	Network variables via LON
LONSPA	SPA communication protocol
LEDGEN	General LED indication part for LHMI

1.4.4 IEC61850 edition 1 / edition 2 mapping

Table 6: IEC61850 edition 1 / edition 2 mapping

Function block name	Edition 1 logical nodes	Edition 2 logical nodes
AEGPVOC	AEGGAPC	AEGPVOC
AGSAL	SECLLN0 AGSAL	AGSAL
ALMCALH		ALMCALH
ALTIM		ALTIM
ALTMS		ALTMS
ALTRK		ALTRK
BCZSPDIF	BCZSPDIF	BCZSPDIF
BCZTPDIF	BCZTPDIF	BCZTPDIF
BDCGAPC	SWSGGIO	BDCGAPC
BRCPTOC	BRCPTOC	BRCPTOC
BTIGAPC	B16IFCVI	BTIGAPC
BUSPTRC_B1	BBSPLLN0 BUSPTRC	LLN0 BUSPTRC
BUSPTRC_B2	BUSPTRC	BUSPTRC
BUSPTRC_B3	BUSPTRC	BUSPTRC
BUSPTRC_B4	BUSPTRC	BUSPTRC
BUSPTRC_B5	BUSPTRC	BUSPTRC
BUSPTRC_B6	BUSPTRC	BUSPTRC
BUSPTRC_B7	BUSPTRC	BUSPTRC
BUSPTRC_B8	BUSPTRC	BUSPTRC
BUSPTRC_B9	BUSPTRC	BUSPTRC
BUSPTRC_B10	BUSPTRC	BUSPTRC
BUSPTRC_B11	BUSPTRC	BUSPTRC
BUSPTRC_B12	BUSPTRC	BUSPTRC
Table continues on next page		

Function block name	Edition 1 logical nodes	Edition 2 logical nodes
BUSPTRC_B13	BUSPTRC	BUSPTRC
BUSPTRC_B14	BUSPTRC	BUSPTRC
BUSPTRC_B15	BUSPTRC	BUSPTRC
BUSPTRC_B16	BUSPTRC	BUSPTRC
BUSPTRC_B17	BUSPTRC	BUSPTRC
BUSPTRC_B18	BUSPTRC	BUSPTRC
BUSPTRC_B19	BUSPTRC	BUSPTRC
BUSPTRC_B20	BUSPTRC	BUSPTRC
BUSPTRC_B21	BUSPTRC	BUSPTRC
BUSPTRC_B22	BUSPTRC	BUSPTRC
BUSPTRC_B23	BUSPTRC	BUSPTRC
BUSPTRC_B24	BUSPTRC	BUSPTRC
BUTPTRC_B1	BBTPLLN0 BUTPTRC	LLN0 BUTPTRC
BUTPTRC_B2	BUTPTRC	BUTPTRC
BUTPTRC_B3	BUTPTRC	BUTPTRC
BUTPTRC_B4	BUTPTRC	BUTPTRC
BUTPTRC_B5	BUTPTRC	BUTPTRC
BUTPTRC_B6	BUTPTRC	BUTPTRC
BUTPTRC_B7	BUTPTRC	BUTPTRC
BUTPTRC_B8	BUTPTRC	BUTPTRC
BZNSPDIF_A	BZNSPDIF	BZNSGAPC BZNSPDIF
BZNSPDIF_B	BZNSPDIF	BZNSGAPC BZNSPDIF
BZNTPDIF_A	BZNTPDIF	BZNTGAPC BZNTPDIF
BZNTPDIF_B	BZNTPDIF	BZNTGAPC BZNTPDIF
CBPGAPC	CBPLLN0 CBPMMXU CBPPTRC HOLPTOV HPH1PTOV PH3PTOC PH3PTUC RP3PDOP	LLN0 CBPPTRC HOLPTOV HPH1PTOV PH3PTOC PH3PTUC RP3PDOP
CCPDSC	CCRPLD	CCPDSC
CCRBRF	CCRBRF	CCRBRF
CCSRBRF	CCSRBRF	CCSRBRF
CCSSPVC	CCSRDIF	CCSSPVC
CMMXU	CMMXU	CMMXU
CMSQI	CMSQI	CMSQI
Table continues on next page		

Function block name	Edition 1 logical nodes	Edition 2 logical nodes
COUVGAPC	COUVLLN0 COUVPTOV COUVPTUV	LLN0 COUVPTOV COUVPTUV
CVGAPC	GF2LLN0 GF2MMXN GF2PHAR GF2PTOV GF2PTUC GF2PTUV GF2PVOC PH1PTRC	LLN0 GF2MMXN GF2PHAR GF2PTOV GF2PTUC GF2PTUV GF2PVOC PH1PTRC
CVMMXN	CVMMXN	CVMMXN
DPGAPC	DPGGIO	DPGAPC
DRPRDRE	DRPRDRE	DRPRDRE
ECPSCH	ECPSCH	ECPSCH
ECRWPSCH	ECRWPSCH	ECRWPSCH
EF4PTOC	EF4LLN0 EF4PTRC EF4RDIR GEN4PHAR PH1PTOC	LLN0 EF4PTRC EF4RDIR GEN4PHAR PH1PTOC
EFPIOC	EFPIOC	EFPIOC
ETPMMTR	ETPMMTR	ETPMMTR
FDPSPDIS	FDPSPDIS	FDPSPDIS
FMPSPDIS	FMPSPDIS	FMPSPDIS
FRPSPDIS	FPSRPDIS	FPSRPDIS
FTAQFVR	FTAQFVR	FTAQFVR
FUFSPVC	SDDRFUF	FUFSPVC
GENPDIF	GENPDIF	LLN0 GENGAPC GENPDIF GENPHAR GENPTRC
GOPPDOP	GOPPDOP	LLN0 GOPPDOP PH1PTRC
GRPTTR	GRPTTR	LLN0 GRPTTR GRPTUC
GSPTTR	GSPTTR	GSPTTR
GUPPDUP	GUPPDUP	LLN0 GUPPDUP PH1PTRC
HZPDIF	HZPDIF	HZPDIF
INDCALCH		INDCALH
ITBGAPC	IB16FCVB	ITBGAPC
Table continues on next page		

Function block name	Edition 1 logical nodes	Edition 2 logical nodes
L3CPDIF	L3CPDIF	LLN0 L3CGAPC L3CPDIF L3CPHAR L3CPTRC
L4UFCNT	L4UFCNT	L4UFCNT
L6CPDIF	L6CPDIF	LLN0 L6CGAPC L6CPDIF L6CPHAR L6CPTRC
LAPPGAPC	LAPPLLN0 LAPPPDUP LAPPPUPF	LLN0 LAPPPDUP LAPPPUPF
LCCRPTRC	LCCRPTRC	LCCRPTRC
LCNSPTOC	LCNSPTOC	LCNSPTOC
LCNSPTOV	LCNSPTOV	LCNSPTOV
LCP3PTOC	LCP3PTOC	LCP3PTOC
LCP3PTUC	LCP3PTUC	LCP3PTUC
LCPTTR	LCPTTR	LCPTTR
LCZSPTOC	LCZSPTOC	LCZSPTOC
LCZSPTOV	LCZSPTOV	LCZSPTOV
LD0LLN0	LLN0	LLN0
LDLPSCH	LDLPDIF	LDLPSCH
LDRGFC	STSGGIO	LDRGFC
LEXPDIS	LEXPDIS	LLN0 LEXPDIS LEXPTRC
LFPTTR	LFPTTR	LFPTTR
LMBRFLO	LMBRFLO	LMBRFLO
LOVPTUV	LOVPTUV	LOVPTUV
LPHD	LPHD	LPHD
LT3CPDIF	LT3CPDIF	LLN0 LT3CGAPC LT3CPDIF LT3CPHAR LT3CPTRC
LT6CPDIF	LT6CPDIF	LLN0 LT6CGAPC LT6CPDIF LT6CPHAR LT6CPTRC
MVGAPC	MVGGIO	MVGAPC
NS2PTOC	NS2LLN0 NS2PTOC NS2PTRC	LLN0 NS2PTOC NS2PTRC
Table continues on next page		

Function block name	Edition 1 logical nodes	Edition 2 logical nodes
NS4PTOC	EF4LLN0 EF4PTRC EF4RDIR GEN4PHAR PH1PTOC	LLN0 EF4PTRC EF4RDIR PH1PTOC
OC4PTOC	OC4LLN0 GEN4PHAR PH3PTOC PH3PTRC	LLN0 GEN4PHAR PH3PTOC PH3PTRC
OEXPVPH	OEXPVPH	OEXPVPH
OOSPPAM	OOSPPAM	LLN0 OOSPPAM OOSPTRC
OV2PTOV	GEN2LLN0 OV2PTOV PH1PTRC	LLN0 OV2PTOV PH1PTRC
PAPGAPC	PAPGAPC	PAPGAPC
PCFCNT	PCGGIO	PCFCNT
PH4SPTOC	OCNDLLN0 GEN4PHAR PH1BPTOC PH1PTRC	LLN0 GEN4PHAR PH1BPTOC PH1PTRC
PHPIOC	PHPIOC	PHPIOC
PRPSTATUS	RCHLCCH	RCHLCCH SCHLCCH
PSLPSCH	ZMRPSL	PSLPSCH
PSPPPAM	PSPPPAM	LLN0 PSPPPAM PSPPTRC
QCBAY	QCBAY	LLN0
QCRSV	QCRSV	QCRSV
REFPDIF	REFPDIF	REFPDIF
ROTIPHIZ	ROTIPHIZ	LLN0 ROTIPHIZ ROTIPTRC
ROV2PTOV	GEN2LLN0 PH1PTRC ROV2PTOV	LLN0 PH1PTRC ROV2PTOV
SAPFRC	SAPFRC	SAPFRC
SAPTOF	SAPTOF	SAPTOF
SAPTUF	SAPTUF	SAPTUF
SCCVPTOC	SCCVPTOC	SCCVPTOC
SCILO	SCILO	SCILO
SCSWI	SCSWI	SCSWI
SDEPSDE	SDEPSDE	LLN0 SDEPSDE SDEPTOC SDEPTOV SDEPTRC

Table continues on next page

Function block name	Edition 1 logical nodes	Edition 2 logical nodes
SESRSYN	RSY1LLN0 AUT1RSYN MAN1RSYN SYNRSYN	LLN0 AUT1RSYN MAN1RSYN SYNRSYN
SINGLELCCH		SCHLCCH
SLGAPC	SLGGIO	SLGAPC
SMBRREC	SMBRREC	SMBRREC
SMPPTRC	SMPPTRC	SMPPTRC
SP16GAPC	SP16GGIO	SP16GAPC
SPC8GAPC	SPC8GGIO	SPC8GAPC
SPGAPC	SPGGIO	SPGAPC
SSCBR	SSCBR	SSCBR
SSIMG	SSIMG	SSIMG
SSIML	SSIML	SSIML
STBPTOC	STBPTOC	STBPTOC
STEFPHIZ	STEFPHIZ	STEFPHIZ
STTIPHIZ	STTIPHIZ	STTIPHIZ
SXCBR	SXCBR	SXCBR
SXSWI	SXSWI	SXSWI
T2WPDIF	T2WPDIF	LLN0 T2WGAPC T2WPDIF T2WPHAR T2WPTRC
T3WPDIF	T3WPDIF	LLN0 T3WGAPC T3WPDIF T3WPHAR T3WPTRC
TCLYLTC	TCLYLTC	TCLYLTC
TCMYLTC	TCMYLTC	TCMYLTC
TEIGAPC	TEIGGIO	TEIGAPC
TMAGAPC	TMAGGIO	TMAGAPC
TR1ATCC	TR1ATCC	TR1ATCC
TR8ATCC	TR8ATCC	TR8ATCC
TRPTTR	TRPTTR	TRPTTR
UV2PTUV	GEN2LLN0 PH1PTRC UV2PTUV	LLN0 PH1PTRC UV2PTUV
VDCPTOV	VDCPTOV	VDCPTOV
VDSPVC	VDRFUF	VDSPVC
VMMXU	VMMXU	VMMXU
VMSQI	VMSQI	VMSQI
VNMMXU	VNMMXU	VNMMXU
Table continues on next page		

Function block name	Edition 1 logical nodes	Edition 2 logical nodes
VRPVOC	VRLLN0 PH1PTRC PH1PTUV VRPVOC	LLN0 PH1PTRC PH1PTUV VRPVOC
VSGAPC	VSGGIO	VSGAPC
WRNCALH		WRNCALH
ZC1PPSCH	ZPCPSCH	ZPCPSCH
ZC1WPSCH	ZPCWPSCH	ZPCWPSCH
ZCLCPSCH	ZCLCPLAL	LLN0 ZCLCPSCH
ZCPSCH	ZCPSCH	ZCPSCH
ZCRWPSCH	ZCRWPSCH	ZCRWPSCH
ZCVPSOF	ZCVPSOF	ZCVPSOF
ZGVPDIS	ZGVLLN0 PH1PTRC ZGVPDIS ZGVPTUV	LLN0 PH1PTRC ZGVPDIS ZGVPTUV
ZMCAPDIS	ZMCAPDIS	ZMCAPDIS
ZMCPDIS	ZMCPDIS	ZMCPDIS
ZMFCPDIS	ZMFCLLN0 PSFPDIS ZMFPDIS	LLN0 PSFPDIS ZMFPDIS
ZMFPDIS	ZMFLLN0 PSFPDIS ZMFPDIS	LLN0 PSFPDIS ZMFPDIS
ZMHPDIS	ZMHPDIS	ZMHPDIS
ZMMAPDIS	ZMMAPDIS	ZMMAPDIS
ZMMPDIS	ZMMPDIS	ZMMPDIS
ZMQAPDIS	ZMQAPDIS	ZMQAPDIS
ZMQPDIS	ZMQPDIS	ZMQPDIS
ZMRAPDIS	ZMRAPDIS	ZMRAPDIS
ZMRPDIS	ZMRPDIS	ZMRPDIS
ZMRPSB	ZMRPSB	ZMRPSB
ZSMGAPC	ZSMGAPC	ZSMGAPC

Section 2 Introduction to IEC 61850

The general scope of the IEC 61850 protocol standard is designed to support the communication of all functions being performed in the substation. Its' main goal is interoperability; this is the ability for IEDs from one or different manufacturers to exchange information and use the information for their own functions. Moreover, the standard allows a free allocation of these functions and accepts any system philosophy, from a distributed architecture (for example, decentralised substation automation) to a centralised configuration (for example, RTU based).

The standard separates the functionality represented by the data model and the related communication services from the communication implementation (stack).

The data model of the standard is an object-oriented one, grouping the data into the smallest possible sets referring to the smallest possible functions to be implemented independently. These smallest possible data groups or functions are named logical nodes. The logical nodes and all data and attributes contained are named according to a standardised semantic, which is mandatory.

This manual describes how the IEC61850 standard is in the 670 series IEDs. References and brief descriptions of the standard are also included. It is assumed that the reader has basic knowledge of the IEC 61850 standard.

The following parts of the IEC61850 standard are of importance as they relate to this manual:

- Station Configuration description Language (SCL) is described in IEC 61850-6. The SCL is an XML based definition of how to describe the parts of a substation. This part of the standard also includes the roles of different tools as well as the engineering concepts.
- Communication profile (IEC 61850 stack) is described in IEC 61850-8-1. This part of the standard includes a number of possible communication profiles, and how the services defined in IEC 61850-7-2 are mapped to the communication profile.
- Communication services are described in IEC 61850-7-2. This part deals mainly with the communication facilities from client and server point of view. It includes the different possibilities of communication functionality.
- Logical node data model. This is described in IEC 61850-7-3 and IEC 61850-7-4.
- Conformance tests and the basis for conformance documents are handled in IEC 61850-10.

Detailed information regarding the IEC61850 implementation of the IED 670 is described inside the conformance documents.

- MICS, Modeling Information Conformance Statement, contains the declaration of the used logical node types.
- PICS, Protocol Information Conformance Statement, contains the details and what is supported regarding protocol facilities.
- PIXIT, Protocol Extra Information, contains additional information on how the IEC 61850 is implemented and used.
- TICS, Tissue Information Conformance Statement, contains the supported Tissues, which are handled in the Tissues process as defined by UCA, Utility Communication Architecture forum. The Tissues handling is found in http://www.tissue.iec61850.com.

The conformance documents are unique for each product release and refer to each other; the identities included in the related documents refer to a specific version of the 670 series.

The communication profile in IEC 61850 uses the MMS standard, which uses Ethernet and TCP/IP to handle the information transport within the substation.

The data modelling uses the concept of logical nodes to identify the published information for communication. The standard defines a set of logical nodes, each representing a communication view of a process function with a number of data objects. For example, a transformer differential - or line differential protection, because the standard defines only a differential protection. Therefore, it is possible to adapt the logical node, which is defined in the standard, as a logical node class. The standard defines methods to describe the actually used logical node as a logical node type which is then based upon the logical node class. This allows all partners to interpret the logical node type information because the description is completely given in the standard. The type description of all logical nodes is part of the Data Type Template (DTT) section in the SCL description file of a station or the IED.

Besides the information about the configuration of the communication facilities, this manual contains the full description of all logical nodes available in the 670 series IED. The information about the logical nodes and their data objects may be used to identify which signals are available for the functions as described in the technical manual. The link to the technical manual is done in the logical node tables by listing the signal name as given in the function block, or as seen in PCM600 or the LHMI.

2.1.1 Related documentation to IEC 61850

Use the latest revision of the documents listed, unless stated otherwise.

Document ID	Title
IEC 61850-SER Ed1.0 (2013-12-12) - (English)	Communication networks and systems in substations - ALL PARTS
IEC 61850-3 Ed2.0 (2013-12-12) - (English - French)	Communication networks and systems for power utility automation - Part 3: General requirements
IEC 61850-4 Ed2.0 (2011-04-11) - (English - French)	Communication networks and systems for power utility automation - Part 4: System and project management
IEC 61850-5 Ed2.0 (2013-01-30) - (English - French)	Communication networks and systems for power utility automation - Part 5: Communication requirements for functions and devices models
IEC 61850-6 Ed2.0 (2009-12-17) - (English)	Communication networks and systems for power utility automation - Part 6: Configuration description language for communication in electrical substations related to IEDs
IEC 61850-7-1 Ed2.0 (2011-07-15) - (English - French)	Communication networks and systems for power utility automation - Part 7-1: Basic communication structure - Principles and models
IEC 61850-7-2 Ed2.0 (2010-08-24) - (English)	Communication networks and systems for power utility automation - Part 7-2: Basic information and communication structure - Abstract communication service interface (ACSI)
IEC 61850-7-3 Ed2.0 (2010-12-16) - (English - French)	Communication networks and systems for power utility automation - Part 7-3: Basic communication structure - Common data classes
IEC 61850-7-4 Ed2.0 (2010-03-31) - (English)	Communication networks and systems for power utility automation - Part 7-4: Basic communication structure - Compatible logical node classes and data object classes
IEC 61850-7-410 Ed2.0 (2012-10-30) - (English - French)	Communication networks and systems for power utility automation - Part 7-410: Basic communication structure - Hydroelectric power plants - Communication for monitoring and control
IEC 61850-7-420 Ed1.0 (2009-03-10) - (English)	Communication networks and systems for power utility automation - Part 7-420: Basic communication structure - Distributed energy resources logical nodes

Table continues on next page

IEC 61850-8-1 Ed2.0 (2011-06-17) - (English - French)	Communication networks and systems for power utility automation - Part 8-1: Specific Communication Service Mapping (SCSM) - Mappings to MMS (ISO 9506-1 and ISO 9506-2) and to ISO/IEC 8802-3
IEC 61850-9-2 Ed2.0 (2011-09-22) - (English - French)	Communication networks and systems for power utility automation - Part 9-2: Specific Communication Service Mapping (SCSM) - Sampled values over ISO/IEC 8802-3
IEC 61850-10 Ed2.0 (2012-12-14) - (English - French)	Communication networks and systems for power utility automation - Part 10: Conformance testing
IEC 61850 MICS 1MRG014020	670 series version 2.0 Ed2 - MICS: Modelling implementation conformance statement
IEC 61850 PICS 1MRG014019	670 series version 2.0 Ed2 - PICS: Protocol implementation conformance statement
IEC 61850 PIXIT 1MRG014021	670 series version 2.0 Ed2 - PIXIT: Protocol implementation extra information
IEC 61850 TICS 1MRG014018	670 series version 2.0 Ed2 - TICS: Tissue implementation conformance statement

Section 3 Substation Configuration description Language (SCL)

Four different types of SCL files - SCD, CID, IID, and ICD, can be exported from PCM 600.

The SCL language is based on XML. However, detailed knowledge of the XML contents is not needed.

The SCL XML file (ICD/SCD/CID/IID) contains five sections, which are specified in IEC 61850–6 clause 9.

- Header
- Substation section describes the functional structure and its relation to primary devices.
- Communication section describes the connection between the IED access points to the respective subnetwork. and includes also the properties (addresses) of the access points.
- IED section contains a description of the supported communication services, the access point(s) and the IEDs logical devices, logical nodes and their attributes.
- Data type template section contains a declaration of all types used in the SCL file, logical nodes type, DO types, attributes and enums.

The system structure is defined by the organization of the plant structure in PCM600. The signal engineering and the signal routing are IET600 tasks. The IED needs to be configured with PCM600 before the system is configured with IET600.

The IED section contains the logical node types included in the respective IED configuration and the data sets and the control blocks configured by IET600. The data sets and the control blocks are logically defined as part of the logical nodes (see IEC 61850–7–2 clause 9). IET600 also needs a correctly configured communication section for GOOSE engineering.

The data type templates section provides the correct content description of each logical node type to all tools and users (clients) of the information. Each IED and vendor may have their own logical node type definitions included in the data type template section together with all other logical node types based on the standard.

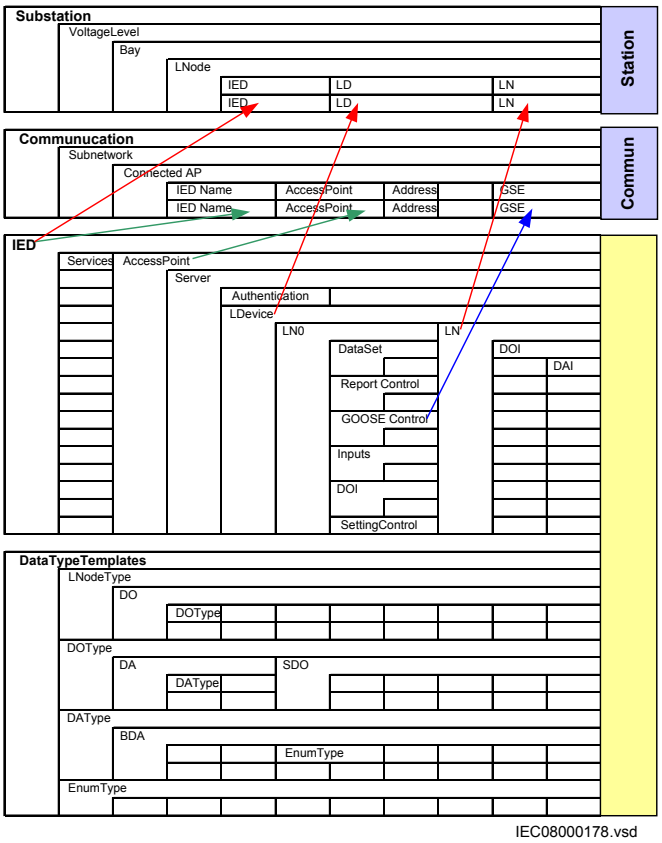

Figure 2: IEC 61850: Principle structure of the SCL XML file

The arrows show the link between the different sections given when an IED is integrated in the substation structure and/or in the communication structure. All needed logical nodes of an IED are linked to the substation section by the SC tool.

A reference to GOOSE Control Blocks (GoCB) is included in the communication section when GoCB is configured.

3.1 The substation section

The substation description in IEC 61850-6 clause 9 describes the arrangement of the primary equipment. In addition, it also includes a list of the applied logical nodes and the relation of those logical nodes to the primary equipment.

3.2 The communication section

The organization of the physical IEDs to the communication network is independent of the substation structure. The IEC 61850 standard defines the

communication network with no relation to an existing media or protocol. The mapping to an existing media and protocol is specified in IEC 61850–8–1.

The IEC 61850 standard describes in part 7–2 the ACSI in a media and protocol independent form. Part 8–1 specifies the mapping of this ACSI to the existing MMS.

The communication section describes how information is routed between the IEDs and contains the following parts:

- Subnetworks
- IEDs connected to different subnetworks
- Access points per IED to subnetworks
- Address
- IP address of LAN network (is exceptionally part of the address elements)
- Link to GoCB message in transmission direction (extended during signal engineering and routing)

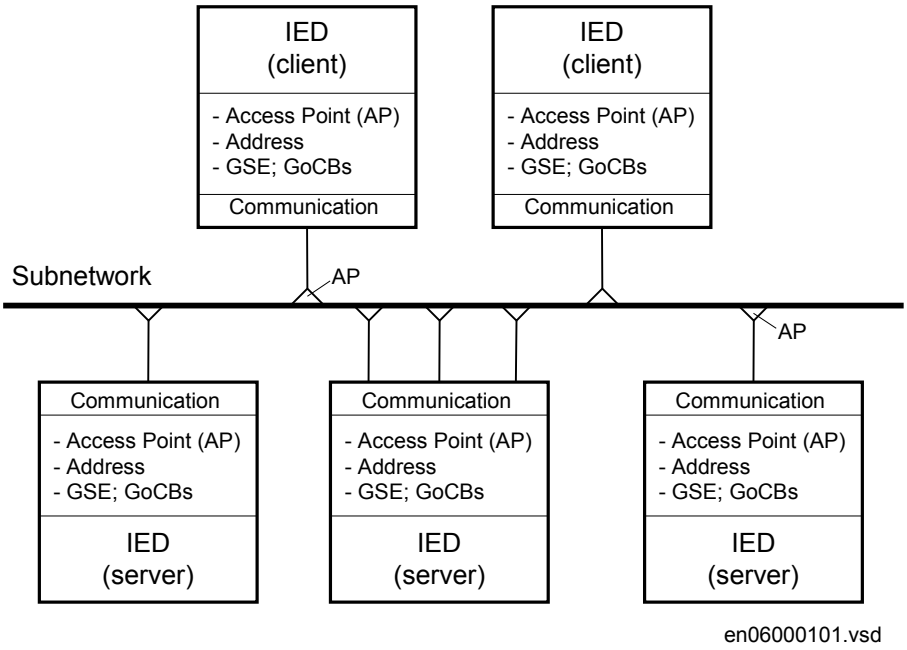

Figure 3: IEC 61850–6: Communication network

Additional information about the server is part of the IED.

3.3 The IED section

The IED section describes the complete IED as it is needed for IEC 61850 communication and signal engineering. The data type template part of an IED may be seen as part of the IED, even when separated in its own section. The IED's ICD

files include the description of the logical nodes, their data type templates and the used or supported services. The structure of the IED section follows the definitions made in the IEC 61850 standard.

Two basic IED types are used in system configuration.

- Station level IEDs
  are located on the station level and are identified as client IEDs when they read or write information from or to the bay IEDs. This functionality is represented by logical nodes of group “Information (I)”. These are the logical nodes (LN) = ITCI, IHMI and ITMI. Client IEDs are the receiver of information in monitoring direction and sender of commands (control). These logical nodes have no data objects. They are only used to link the report control blocks (BRCBs) from the server IEDs. They have to read their information about the signals and the signal configuration from the bay IEDs. This is possible by checking all control blocks for a link to it as a client.
- Bay level IEDs
  are located on the bay level and are identified as server IEDs when they read or write information vertically. When GOOSE messages are received, the bay level IED also has the client role.

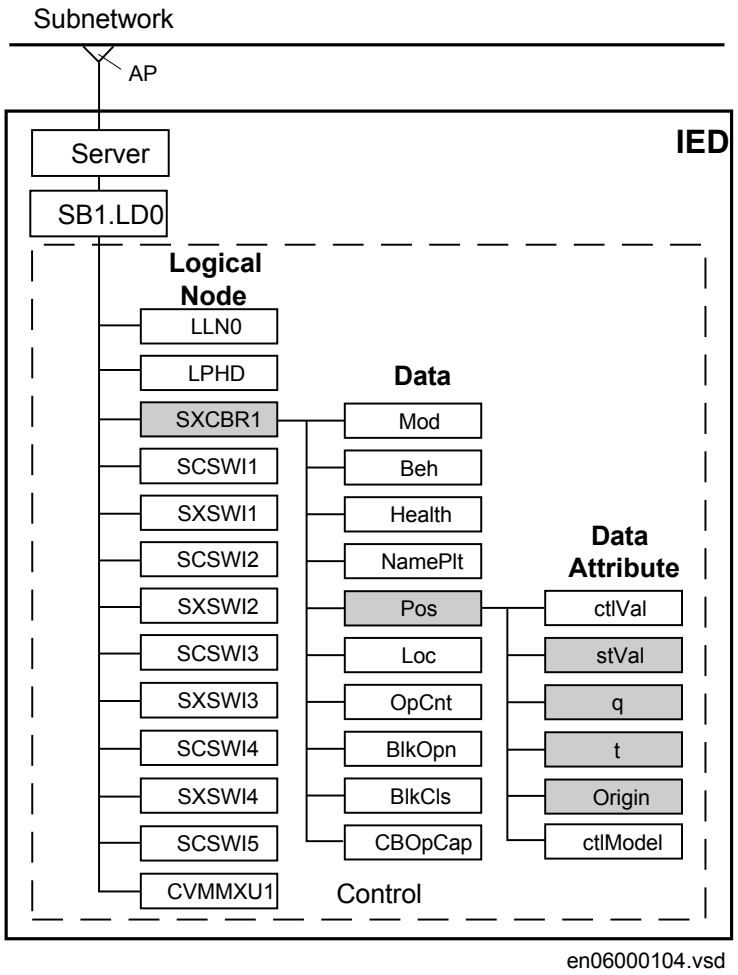

Figure 4: Organization of LDs, LNs, DOs and DAs in an IED

- A server represents the communication interface to the subnetwork (Ethernet).
- One or more logical device(s) (LD) are connected to a server.
- A set of logical nodes belong to a LD.
- The LN LLN0 is a special logical node per LD and contains for example the data sets, the various control blocks, inputs (from GOOSE messages). In IED 670 series, the data sets and the control blocks shall be located to LD0.
- The LN LPHD is a special logical node per LD and contains data objects that describe the status of the physical device (the IED)
- Each logical node represents a function and contains a number of data objects (DO)
- Each DO includes a number of data attributes (DA)

The data objects represent information signals that may be routed to station level IEDs or to other bay IEDs that are communicating via GOOSE. The signal engineering task is to select the requested signals (DOs) and link them to the client IEDs as receiver. When using a dataset for MMS, the requested signals are DOs but when creating a dataset for GOOSE messaging, DAs are used.

The number of data objects and data attributes per DO is defined by the used LN type in the IED. The content of logical node types and DO types are defined in the DTT. This also means that the definitions in the DTT section have to be unique within an SCD file.

3.4 Tool concept

The IEC 61850-6 defines a number of roles for tools. In the Relion® series, PCM600 is defined as the IED tool, and IET600 is defined as the system engineering tool.

The sections in SCL contain properties that are to be configured by these tools. There is no relation between one section and one specific tool. The task of the IED tool is to configure all properties for the IED, while the system tool has the task to define the place of the IED in the system and its communication dependencies. For example, the plant structure in PCM600 results in the subsystem section in SCL regarding the subsystem structure down to the IED level. The PCM600 also configures the IED section as a result of the IED configuration. In PCM600, the configuration properties for SCL are handled automatically as a result of the configuration, except for the receiving of GOOSE information that has a dependency with the system tool.

IEC 61850 engineering with PCM600, PCM600 IEC61850 Configuration tool and IET600

PCM600:

- When an IED is instantiated, its place in the plant structure creates the corresponding structure in the substation section in SCL. The communication facilities is also created in the communication section.
- The functionality of the IED is configured by using ACT in PCM600. For each function, the corresponding logical device and logical node(s) is created in the IED section together with its type definition in data type template section
- The above forms the IED capabilities from a communication perspective and will then be included in the file exported from PCM600 as SCD, ICD or CID file

PCM600: IEC61850 Configuration tool

- Included in PCM600 is the new IEC61850 Configuration tool which allows the user to define data sets and control blocks for both Client Server and GOOSE communication.
- The IEC61850 Configuration tool gives the user the possibility to make the IEC61850 engineering without export / import step.

It does NOT however allow the User to define the substation part.

IET600:

- Open a SCD file or import/merge a SCD, ICD or CID file for the particular IED(s).
- For each IED, the user defines the datasets, the control blocks for reporting (this means unbufffered/buffered reporting and GOOSE) and the properties for each report control block.

Data sets (DS) are generated automatically in PCM600. Report control blocks (RCBs) are not generated automatically in PCM600.

- If client definitions (like client. ICD) are required in the system configuration, they are merged into IET600 and connected to the unbuffered/buffered report control blocks.
- Logical nodes, which are not related to the conducting equipment, must be included in the bay level in the substation section.
- The resulting SCD file is exported from IET600.

PCM600:

Define the inputs for the client in IET600 and cross-reference the signals in SMT. Import the SCD file to PCM600 to receive GOOSE data. For each IED that shall receive GOOSE information, the received data is connected to the applications using SMT in PCM600.

If input signals are not defined for clients in IET600, they will not be visible in SMT. Inputs (GOOSE clients) can also be defined in PCM600.

3.5 Engineering concept in IEC 61850-6

- Top-down approach means that the system engineering tool has ICD files available for each IED to be included in the system configuration. The ICD files may be of the template type and represent a pre-configured IED.
- Bottom-up approach means that the configurations are produced by the IED tool, and that are exported as CID, or IID files (or SCD file) to be imported into the system tools.

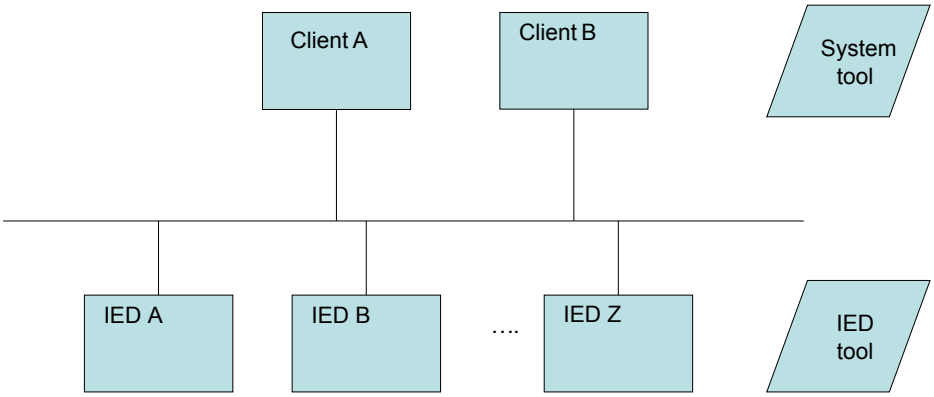

IEC09000151-1-en.vsd

Figure 5: Relation between system and IED tools

Regardless of the engineering approach, the idea is that the IED tool provides the CID, ICD, or IID file for each IED. These ICD/CID/IID files are then imported into the system tool and merged into a SCD file, representing the complete substation or a part of the substation, like one for each voltage level.

Section 4 Communication profile

The IEC 61850 standard is conceptually written to be independent of an existing communication media and message transmission concept. Out of this, a specific communication profile is decided and has been commonly used. The profile contains:

- Ethernet as the media
- TCP/IP
- ISO session and presentation layer
- MMS (Manufacturing Message Specification (ISO 9506-1 and ISO 9506-2)

The IEC 61850 standard describes its requested services in ACSI, which is contained in part 7-2 of the standard. The mapping to the MMS for all aspects of services and Ethernet usage is specified in part 8-1 of IEC 61850.

Each device manufacturer, which is a partner of an IEC 61850 based communication network, has to take these two specifications and adapt their respective product to the requirements and definitions given in the standard. To make this profile visible to all other partners, so they can check what they can expect and what they have to support, the PICS document is defined. The PICS contains in a table based form the possibility of a product or product family.

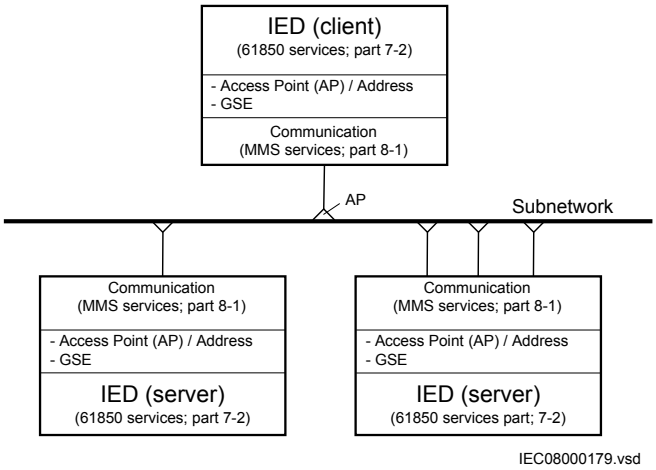

Figure 6: IEC 61850 Protocol: related standards for communication

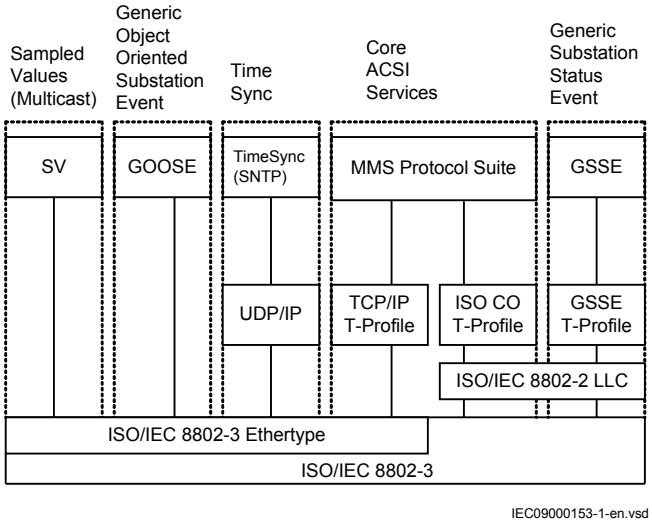

Figure 7: Overview of functionality and profiles according to IEC 61850-8-1

Out of this content, the implementation in the 670 series supports:

- GOOSE
- TimeSync using SNTP
- The peer-to-peer/vertical communication using MMS protocol suite with the T-profile TCP/IP
- Sampled values according to 9-2LE

For each of the above, the resulting underlying protocols as stated in Figure 7.

See the PICS and PIXIT for more information.

Section 5 Supported services

IEC 61850-7-2 describes the services in the standard. IEC 61850-8-1 describes how the services are applied in the communication. The conformance documents contain the description of the supported services in the IED.

Services that are not mentioned in this chapter or in the conformance document are not supported by the IED 670.

GOOSE simulation is supported according to IEC 61850 7-2.

If *LD0.PHD.ST.Sim.stVal* is set to true, then incoming GOOSE with test-bit in GOOSE header set is treated as real GOOSE and real GOOSE is discarded starting on first received GOOSE with test-bit set until *LD0.LPHD.ST.Sim.stVal* is rested to false. After that the real GOOSE is active again and GOOSE with test-bit set is discarded.

Data set

Define data sets by the SCD description.

Create data sets under LD0/LLN0.

For more information on data sets, see ABB 670 series version 2.0 Ed2 - PIXIT 1MRG014021

Substitution

Substitution is supported for the respective DATA, according to IEC 61850-7-4, that have the substitution attributes defined.

Setting group control block

There is only one setting group control block, which is located in LD0/LLN0 (Logical Device/Logical Node 0).

Change or edit of setting values as well as reading of setting values is neither supported nor visible in IEC 61850.

Note that the actual number of used setting groups is defined by the parameter *MaxNoSetGRP* in the function *SETGRPS*, which is configured in PST in PCM600. But six setting groups is the maximum and it cannot be exceeded.

Report control block

For properties about report control blocks, see PIXIT.

UnBuffered reporting as well as Buffered reporting is supported.

Generic object oriented substation event (GOOSE)

The structured GOOSE is supported. This means that the data sets can be defined with FCDA as well as explicit attributes.

The supported data types to be published and received over GOOSE are binary values, double point values, integer values and measured values, together with their quality. One signal is available inside the application to validate the reception of a GOOSE message. Invalid means that the correct GOOSE message is not received prior 2*TAL(Time Allowed to Live).

GOOSE with TAL= 0 ms is treated as GOOSE with TAL = 100 ms and accepted.

Note that the data sets that are used or referred to by GOOSE control blocks can only include a data attribute once. In other words, there may not be the same data attribute in more than one data set.

When publishing a measured value, the user must take care of which measured value data attributes are added to a data set. If the measured value is event-handled (like in the case of MMXU functions), then one can add that value directly to the data set. If the value is not event-handled, (like in the case of Synchrocheck function), it is recommended to connect the value desired to be published to a MVGAPC function block (in ACT) and then use the measured value given by the MVGAPC.

Example of functions that have event-handled measured values (can be added directly to the data set).

- CVMMXN - Measurements
- CMMXU - Phase current measurement
- VMMXU - Phase-phase voltage measurement
- CMSQI - Current sequence component measurement
- VMSQI - Voltage sequence measurement
- VNMMXU - Phase-neutral voltage measurement
- MVGAPC - IEC 61850 generic communication I/ O functions

Generic function blocks are provided to make available to the 61850 bus signals that are not defined inside any of the available function blocks. Example of such functions include:

- SPGAPC - IEC 61850 generic communication I/ O functions
- DPGAPC - IEC 61850 generic communication I/ O functions
- MVGAPC - IEC 61850 generic communication I/ O functions

Control

Of the different control sequences, the ‘direct-with-normal-security’ and ‘SBO-with-enhanced’ security are supported (defined by the ctlModel parameter, IEC 61850-7-2).

Check bits; interlock check and synchrocheck check, are only valid for LN types based upon CSWI class.

Verification of Originator Category is supported, see also PIXIT.

GOOSE simulation

Receiving GOOSE simulation is supported according to IEC 61850-7-2.

You can enable the GOOSE-simulation feature in PST or HMI by setting "AllowGOOSESimulation" to "Yes". By enabling *...LD0.LPHD1.Sim.stVal*, IEC 61850 is set to "true" and GOOSE simulation activates. From then on, receiving GOOSE with simulation-bit (set in the GOOSE header) is treated as real GOOSE and the original real GOOSE is ignored.

If you is switch the simulated GOOSE off, the GOOSE receiver does not automatically switch back to the real original GOOSE. Internal GOOSE data is set to invalid, because the simulated GOOSE is missing. Only if the GOOSE-simulation feature is switched off in PST or HMI by setting "AllowGOOSESimulation" to "No" (*...LD0.LPHD1.Sim.stVal*, IEC 61850 is set to "false"), the real GOOSE becomes active again and simulated GOOSE is ignored.

If the PST setting “AllowGOOSESimulation” is set to “No” (default), all operations to LPHD.Sim data object will be rejected.

Service tracking (available for IEC 61850 Ed2)

The LN ALTRK1 allows to track service parameters. The service parameters will stay visible after the execution of service. For this purpose, common data classes are specified which contain the parameters of the services according to IEC 61850-7-2 Ed2.

These data objects for service tracking are supported:

- **Tracking of services**:
  - SpcTrk: Control service tracking for controllable single point
  - DcpTrk: Control service tracking for controllable double point
  - IncTrk: Control service tracking for controllable integer
  - EncTrk1: Control service tracking for enumerated controllable

  - ApcFTrk: Control service tracking for controllable analogue set point with float command
  - ApcIntTrk: Control service tracking for controllable analogue set point with integer command
  - BscTrk: Control service tracking for binary controlled step position information
  - IscTrk: Control service tracking for integer controlled step position information
  - BacTrk: Control service tracking for binary controlled analogue process value
- **Tracking of generic services:**
  - GenTrk: Common service tracking for all services for which no specific tracking data exists.
    For supported generic services, see PIXIT.
- **Tracking of control block services:**
  - UrcbTrk: Access service tracking for unbuffered report control block
  - BrcbTrk: Access service tracking for buffered report control block
  - LocbTrk: Access service tracking for log control block
  - GocbTrk: Access service tracking for goose control block
  - SgcbTrk Access service tracking for setting group control block

Section 6 Data sets and control blocks

6.1 Data sets

IEC 61850 has defined data sets and report control blocks to transmit signals for monitoring purposes. Data sets are also used for GOOSE messages in horizontal communication among IEDs. The project defines the data objects or single data attributes that should be collected in a data set. The following figure shows a data set where all position information of the apparatuses of a bay are put into one data set.

PCM600 will generate default data sets, based on the current ACT configuration. The default data sets can be modified or removed in the engineering tools. No RCBs are created automatically by PCM600. However, the pre-configured IEDs are delivered with RCBs for all default the data sets.

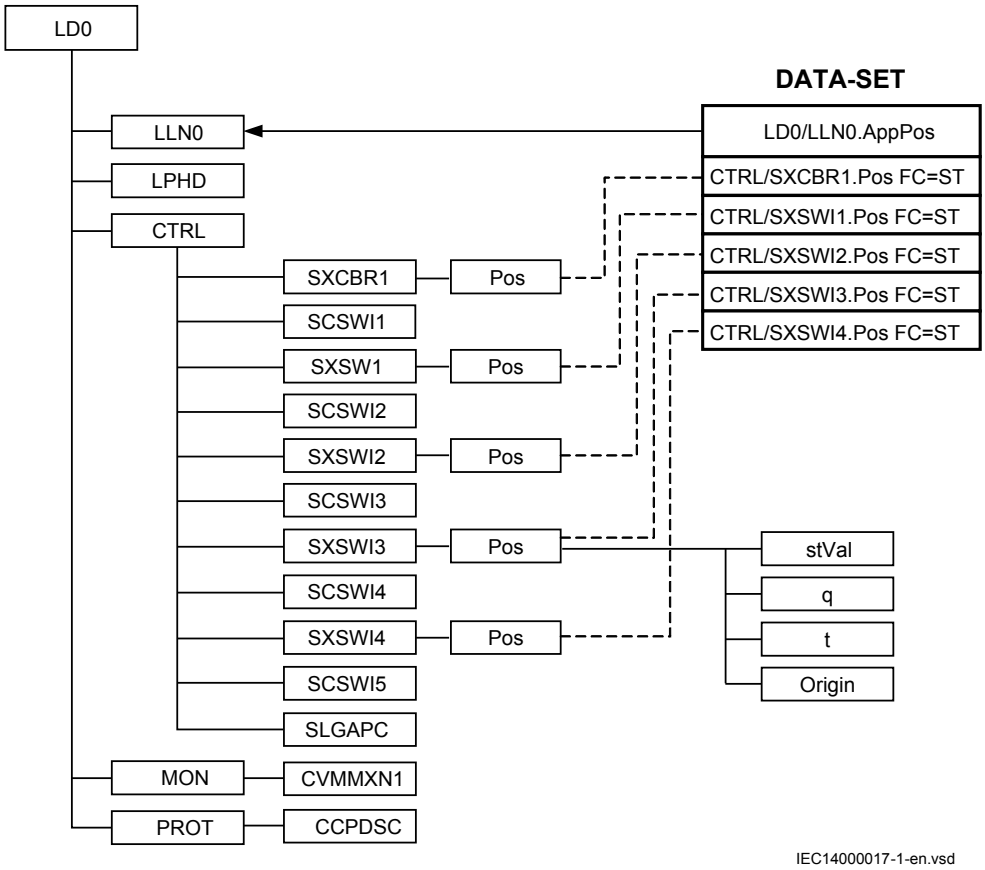

Figure 8: IEC 61850–7–2: Example of a data set for MMS

General rules for data set configuration:

- All data objects or their data attributes can be selected for a data set.
- Only those data attributes of a data object can/will be selected which have the same function constraint (FC).
- Data objects with different FC can be selected for a data set. For example, DOs with FC = ST and DOs with FC=MX can be member in one data set.
- A single data attribute can be selected when it is specified with a trigger option. For example, the data attribute stVal of the data object Pos can be selected as a member of a data set, because it is specified with the trigger option data change detected (dchg).

The description of the data sets with name and the list of data object members (FCDAs is included in the SCL file in the IED section in the Logical device subsection. As specified in IEC 61850–7–2 clause 9, the data sets are part of a logical node. They are most likely included in the LLN0.

6.2 Report control block (URCB/BRCB)

To be able to transmit the signals configured in a DataSet, a report control block must be configured to handle and specify how the events are transmitted to the clients. There are two types of report control blocks; unbuffered and buffered. The buffered report control block stores the events during a communication interrupt, while the unbuffered is sent upon data change and not stored during interruption.

The content of a BRCB is listed in IEC 61850-7-2 in clause 14. The BRCB contains many attributes which are of interest to handle and secure the communication between the client and the server and may be set once as default in a project. Others are of application interest in the way events are handled in a project.

- Buffer time (valid only for BRCB)
  - This parameter describes how long the report should wait for other expected events before it sends the report to the client. When it is known, that additional events are generated as a follow up, it is useful to wait, for example, 500 ms for additional events stored in the report. This feature reduces the number of telegrams transmitted in case of a burst of changes.
- Trigger options
  - The data attributes know three different trigger options (dchg, qchg, dupd). Within the BRCB, the two other can be defined (integrity and general interrogation). The attribute Trigger option is a multiple choice and allows to mask the supported trigger options in this BRCB.
- Integrity period
  - When integrity is selected in the trigger option attribute, it is needed to define an integrity period to force the transmission of all data listed in the DataSet. This is done by the attribute Integrity period. This feature

can be used as a background cycle to ensure that the process image in all partners is the same.

- General interrogation
  - A general interrogation is only done on request from a client. Not all Data-sets may contain information which is needed for a general update of the client. For example data with T(ransient) = TRUE are not part of a GI. When the BRCB attribute general interrogation is set to TRUE a GI request from the client will be handled. The report handler will transmit all data defined in the Data-set with their actual values. The IEC 61850 standard defines that all buffered events shall be transmitted first before the GI is started. A running GI shall be stopped and a new GI shall be started, when a new GI request is received while a GI is running.
- Purge buffer (valid only for BRCB)
  - This BRCB attribute can be used by a client to clean the event buffer from old events. The events are discarded on request of the client. This feature can be used to delete old events not transmitted to the client due to stopped communication. After the link is reestablished the client can decide to clean the buffer or to receive the history.

Trigger Options

IEC 61850 has defined in total five different TrgOp. Three of them belonging to data attributes and marked per data attribute in the column TrgOp of the CDC tables in part 7–3. The other two belonging to the configuration of control blocks.

- dchg = data-change
  - Whenever a process value has changed its value either binary or a measurement a transmission is done.
- qchg = quality change
  - Looking to the possibilities of the quality data attribute type (q) any changes in the quality description will be transmitted.
- dupd = data value update
  - This trigger option give the possibility to define that a transmission should be done on a condition which can be controlled by the application.
- integrity
  - This trigger forces the transmission of all process values defined in the data set when a timer value (the integrity period) expires.
- general interrogation
  - This trigger is forced by the clients (= station level IED; NCC gateway, station HMI, ...). Normally a GI is asked for, when the client and the server start or restart a session. When the client is able to receive the actual values and when the logical device has scanned all process values at least once, an image of the actual process signal status can be transmitted to the client.

Note that the possible trigger options for each attribute are included and defined in the datatype template section in SCL.

Link BRCB to a client LN

The BRCB has to know to whom the events shall be transmitted. This is the signal routing engineering step. The IEC standard 61850–6 describes that this is given by including the LN of the client IED in the ReportBlockEnabled option.

The selected client IED with the corresponding LN, for example, ITCI is included in the SCL structure of the Report Control description of the IED section.

The description of the BRCB with selected DataSet, configured parameters and selected IEDs is included in the SCL file in the IED section in the LN0 structure for the LD where this LN0 belongs to.

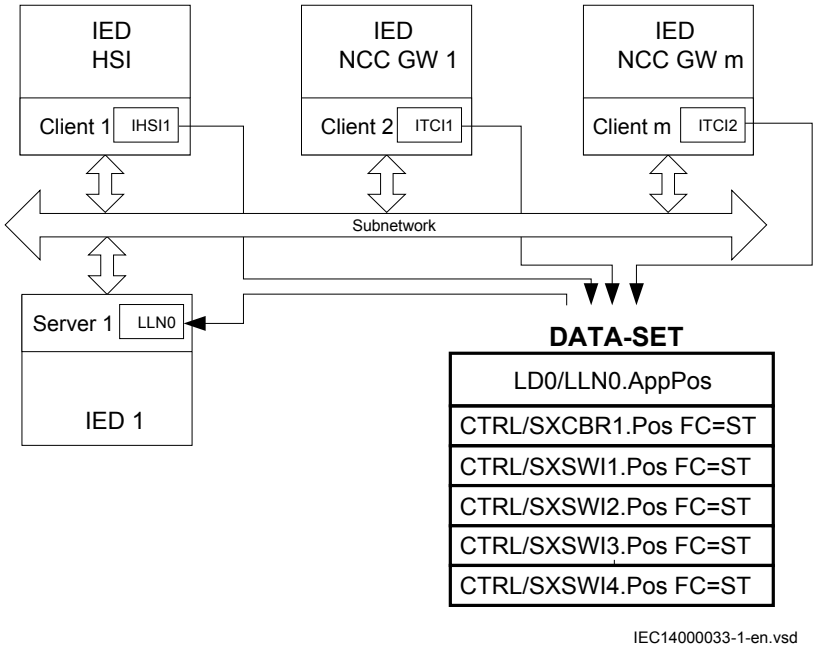

Figure 9: Link BRCB to a client LN

6.3 GOOSE Control Blocks (GoCB)

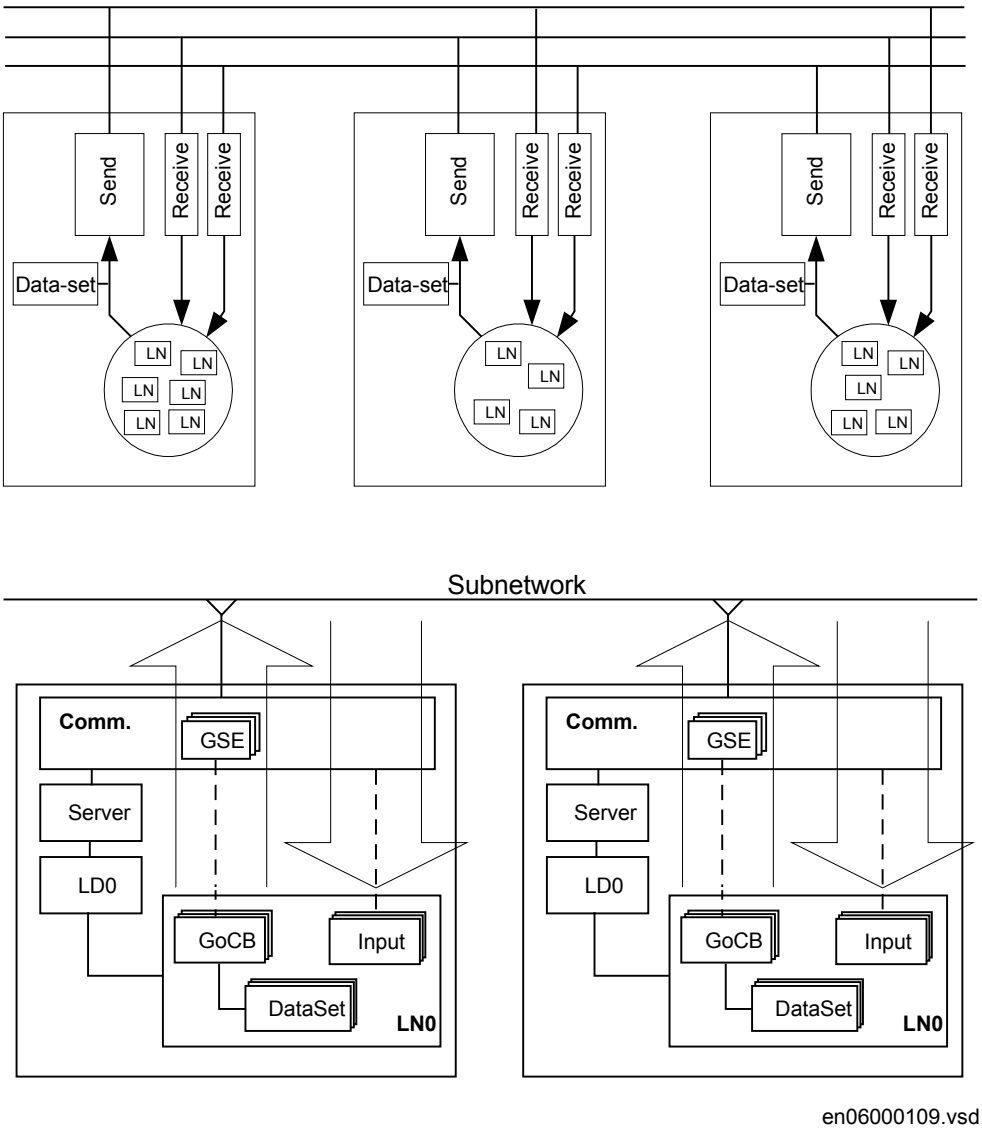

Figure 10: IEC 61850: Principle operation of GOOSE messages

The Generic Object Oriented Substation Event (GOOSE) class model is used to distribute input and output data values between IEDs on bay level (in horizontal direction) through the use of multicast services. GOOSE messages enable fast transmission from a publisher to one or several subscribers (receivers).

The GOOSE service model of IEC 61850-7-2 provides the possibility for fast and reliable system-wide distribution of input and output data values. This implementation uses a specific scheme of re-transmission to achieve the appropriate level of reliability. When a GOOSE server generates a SendGOOSEMessage request, the current data set values are encoded in a GOOSE

message and transmitted on the multicast association. The event that causes the server to invoke a SendGOOSE service is a local application issue as defined in IEC 61850-7-2. Each update may generate a message in order to minimize throughput time.

Additional reliability is achieved by re-transmitting the same data (with gradually increasing SqNum and retransmission time).

T0	retransmission in stable conditions (no event for a long time)
(T0)	retransmission in stable conditions may be shortened by an event
T1	shortest retransmission time after the event
T2, T3	retransmission times until achieving the stable conditions time

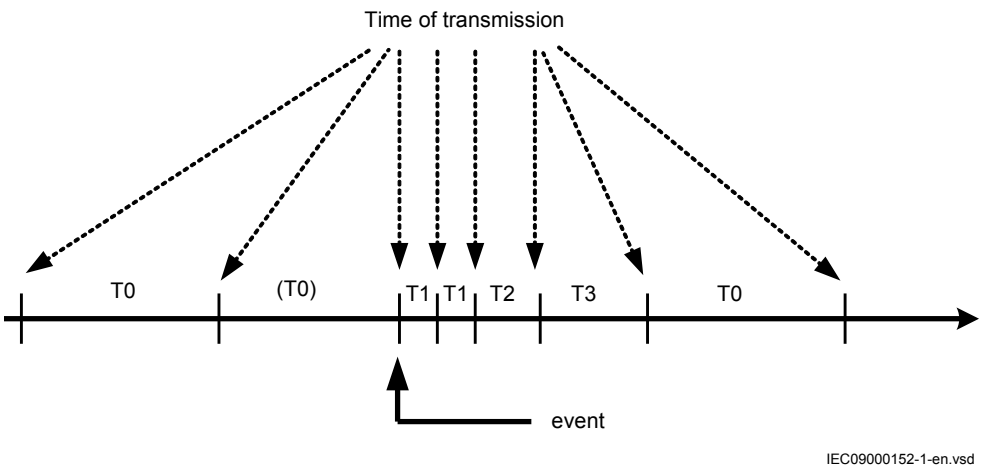

Figure 11: Transmission time for events

Each message in the retransmission sequence carries a timeAllowedToLive parameter that informs the receiver of the maximum time to wait for the next re-transmission. If a new message is not received within that time interval, the receiver assumes that the association is lost. The specific intervals used by any GOOSE publisher are a local issue. The timeAllowedtoLive parameter informs subscribers of how long to wait. The detection time of lost GOOSE is 2* timeAllowedToLive in the subscriber. This allows one lost GOOSE message and to cope with possible transmission delays in the network.

The GOOSE message concept is used for all application functions where two or more IEDs are involved. Typical example is the station-wide interlocking procedure or breaker failure protection.

Figure 10 shows the GOOSE concept for three IEDs which interchange GOOSE messages between each other.

To send GOOSE messages a GoCB must be defined and a data set is needed that contains the data objects of single data attributes to be sent.

A GOOSE message is forced to be transmitted when a trigger change is detected for a data attribute. All members of the data set are copied in the send buffer with their actual value and the message is sent. The subscribers, who knows the address of this GOOSE message, receives the telegram. The GOOSE message includes a sequence number to verify that all messages are received.

Section 7 Logical node data model

The data model used by IEC 61850 is based on logical nodes containing a set of data objects. The data model is defined in the standards.

- IEC 61850-7-4 Compatible logical node classes and data classes
- IEC 61850-7-3 Common data classes

The standard describes only classes of logical nodes and data objects on one side and common data classes for the data object attributes. Also here it is given has the elements in these classes are defined as:

- Mandatory (M)
- Optional (O)
- Conditional optional (Cxxx)
- In addition, the IEC 61850 states rules for adding vendor-specific definitions to the standard, in order to cope with extra functionality.

The possible description of the data model according to the standard allows to adapt a logical node of a LN class to that what the product is supporting or using for this LN. This definition of what parts of a class is used in the actual product and possible addition is called a type, according to IEC 61850-6. There are LN types based upon LN classes. The LN type attributes are called Data Objects (or DATA) and are in of DO types, base upon respective CDC class. This allows all partners in the IEC 61850 project who need this LN to understand the LN in all details for the communication part.

The IEC 61850 standard does not describe the functionality and way of operation. Each supplier has to describe this separately. ABB has described their function blocks that represent a logical node and all other function blocks in the technical manuals. This chapter in the communication protocol manual has two purposes:

- Describe the Logical Node types and their data object attribute types.
- Make the link to the description of the function block.

7.1 Common data objects in each logical node

The IEC 61850 standard describes in part 7-5, a Common Logical Node. The data objects contained in that LN are both mandatory and optional. The mandatory data objects have to be included in each LN. This clause describes the general handling of the data objects within the 670 series products.

The mandatory data objects as defined in IEC 61850-7-4 as part of the Common Logical Node are Mode, Behavior, Health and NamePlate. In Ed.2, Mod, Health and NamePlate are mandatory on the root LLN0, and optional in all other LNs.

Mode

In Ed.2 mode, only On and Off are supported on all LNs except for LD0/LLN0, where On, Blocked, Test, and Test-Blocked are supported. Beh can then get all the possible values (On, Blocked, Test, Test-blocked and Off) as a result of Mod on the Root LLN0 and the individual LNs.

The operation modes ON (enabled) and BLOCKED are supported remotely by a command or locally from the LHMI of the IED.

Note that if the setting “RemoteModControl” is set to “Off” (default), all writes to Mod will be rejected.

Note also that for functions in other Logical devices than LD0, the Mod can only be controlled by communication on LLN0. In 670 2.0, Mod can also be controlled from the LHMI, (both in Ed.1 and Ed.2 mode).

Behaviour

The operational mode as given by the Mode control is shown in the data object Beh with the priority rules as described for Beh in clause 6 of IEC 61850-7-4.

The Beh shows the actual state of the function, dependent upon the hierarchy described in IEC 61850-7-4, clause 6.

In addition, it is possible that the behavior is influenced by other sources as well, independent from the Mod, for example Insertion of the test handle, loss of SV, IED configuration tool (PCM600), or LHMI.

In case the setting “operation” of a function is set to “Off” from the LHMI or by using PCM600, the Beh will be set to “Off” independent of the value of the Mod.

The state OFF can be set from the LHMI or by using PCM600 for the functions having the setting “operation”.

The TEST and the TEST/BLOCKED mode can be operated locally from the LHMI or by using PCM600.

Health

Health will reflect the current status of the IED HW and configuration. Possible values are: OK, Warning, and Alarm.

Health indicates OK, Warning, or Alarm, depending on the IED status.

NamePlt

The name of the logical node and its relation to namespace definition are shown in the data object NamePlt as specified for the SCL structure.

7.2 IEC 61850 data model description, Edition 2, 670 series 2.0

The IEC 61850 data model description, Edition 2, 670 series 2.0 is delivered in online help format on the IED Connectivity package DVD as part of the product delivery. The latest versions can be downloaded from http://www.abb.com/substationautomation.

7.2.1 Using the online help file

1. Download the online help file from this link (1MRK 511 303-WEN): IEC 61850 data model description, Edition 2, 670 series 2.0) and save the file to your local hard drive.
2. Double-click the file.
3. Clear the **Always ask before opening this file** check box.
4. Click **Open**.

7.2.2 DO presence condition description

The Logical Node description uses these conditions:

Condition	Description
AtLeastOne	At least one of marked elements shall be present.
M	Element is mandatory.
MFcond	Not yet defined.
Mmulti	At least one element shall be present; all instances have an instance number within range [1, 99] (see Part 7-1).
MOrootLD	Element is mandatory in the context of a root logical device; otherwise it is optional.
O	Element is optional.
Omulti	Zero or more elements may be present; all instances have an instance number within range [1, 99] (see Part 7-1).

Section 8 Glossary

8.1 Glossary

AC	Alternating current
ACC	Actual channel
ACT	Application configuration tool within PCM600
A/D converter	Analog-to-digital converter
ADBS	Amplitude deadband supervision
ADM	Analog digital conversion module, with time synchronization
AI	Analog input
ANSI	American National Standards Institute
AR	Autoreclosing
ASCT	Auxiliary summation current transformer
ASD	Adaptive signal detection
ASDU	Application service data unit
AWG	American Wire Gauge standard
BBP	Busbar protection
BFOC/2,5	Bayonet fibre optic connector
BFP	Breaker failure protection
BI	Binary input
BIM	Binary input module
BOM	Binary output module
BOS	Binary outputs status
BR	External bistable relay
BS	British Standards
BSR	Binary signal transfer function, receiver blocks
BST	Binary signal transfer function, transmit blocks
C37.94	IEEE/ANSI protocol used when sending binary signals between IEDs
CAN	Controller Area Network. ISO standard (ISO 11898) for serial communication

CB	Circuit breaker
CBM	Combined backplane module
CCITT	Consultative Committee for International Telegraph and Telephony. A United Nations-sponsored standards body within the International Telecommunications Union.
CCM	CAN carrier module
CCVT	Capacitive Coupled Voltage Transformer
Class C	Protection Current Transformer class as per IEEE/ ANSI
CMPPS	Combined megapulses per second
CMT	Communication Management tool in PCM600
CO cycle	Close-open cycle
Codirectional	Way of transmitting G.703 over a balanced line. Involves two twisted pairs making it possible to transmit information in both directions
COM	Command
COMTRADE	Standard Common Format for Transient Data Exchange format for Disturbance recorder according to IEEE/ANSI C37.111, 1999 / IEC60255-24
Contra-directional	Way of transmitting G.703 over a balanced line. Involves four twisted pairs, two of which are used for transmitting data in both directions and two for transmitting clock signals
COT	Cause of transmission
CPU	Central processing unit
CR	Carrier receive
CRC	Cyclic redundancy check
CROB	Control relay output block
CS	Carrier send
CT	Current transformer
CU	Communication unit
CVT or CCVT	Capacitive voltage transformer
DAR	Delayed autoreclosing
DARPA	Defense Advanced Research Projects Agency (The US developer of the TCP/IP protocol etc.)
DBDL	Dead bus dead line
DBLL	Dead bus live line
DC	Direct current
DFC	Data flow control

DFT	Discrete Fourier transform
DHCP	Dynamic Host Configuration Protocol
DIP-switch	Small switch mounted on a printed circuit board
DI	Digital input
DLLB	Dead line live bus
DNP	Distributed Network Protocol as per IEEE Std 1815-2012
DR	Disturbance recorder
DRAM	Dynamic random access memory
DRH	Disturbance report handler
DSP	Digital signal processor
DTT	Direct transfer trip scheme
EHV network	Extra high voltage network
EIA	Electronic Industries Association
EMC	Electromagnetic compatibility
EMF	Electromotive force
EMI	Electromagnetic interference
EnFP	End fault protection
EPA	Enhanced performance architecture
ESD	Electrostatic discharge
F-SMA	Type of optical fibre connector
FAN	Fault number
FCB	Flow control bit; Frame count bit
FOX 20	Modular 20 channel telecommunication system for speech, data and protection signals
FOX 512/515	Access multiplexer
FOX 6Plus	Compact time-division multiplexer for the transmission of up to seven duplex channels of digital data over optical fibers
FUN	Function type
G.703	Electrical and functional description for digital lines used by local telephone companies. Can be transported over balanced and unbalanced lines
GCM	Communication interface module with carrier of GPS receiver module
GDE	Graphical display editor within PCM600
GI	General interrogation command
GIS	Gas-insulated switchgear

GOOSE	Generic object-oriented substation event
GPS	Global positioning system
GSAL	Generic security application
GSM	GPS time synchronization module
GTM	GPS Time Module
HDLC protocol	High-level data link control, protocol based on the HDLC standard
HFBR connector type	Plastic fiber connector
HMI	Human-machine interface
HSAR	High speed autoreclosing
HV	High-voltage
HVDC	High-voltage direct current
ICT	Installation and Commissioning Tool for injection based protection in REG670
IDBS	Integrating deadband supervision
IEC	International Electrical Committee
IEC 60044-6	IEC Standard, Instrument transformers – Part 6: Requirements for protective current transformers for transient performance
IEC 60870-5-103	Communication standard for protection equipment. A serial master/slave protocol for point-to-point communication
IEC 61850	Substation automation communication standard
IEC 61850–8–1	Communication protocol standard
IEEE	Institute of Electrical and Electronics Engineers
IEEE 802.12	A network technology standard that provides 100 Mbits/s on twisted-pair or optical fiber cable
IEEE P1386.1	PCI Mezzanine Card (PMC) standard for local bus modules. References the CMC (IEEE P1386, also known as Common Mezzanine Card) standard for the mechanics and the PCI specifications from the PCI SIG (Special Interest Group) for the electrical EMF (Electromotive force).
IEEE 1686	Standard for Substation Intelligent Electronic Devices (IEDs) Cyber Security Capabilities
IED	Intelligent electronic device
I-GIS	Intelligent gas-insulated switchgear
IOM	Binary input/output module

Instance	When several occurrences of the same function are available in the IED, they are referred to as instances of that function. One instance of a function is identical to another of the same kind but has a different number in the IED user interfaces. The word "instance" is sometimes defined as an item of information that is representative of a type. In the same way an instance of a function in the IED is representative of a type of function.
IP	1. Internet protocol. The network layer for the TCP/IP protocol suite widely used on Ethernet networks. IP is a connectionless, best-effort packet-switching protocol. It provides packet routing, fragmentation and reassembly through the data link layer. 2. Ingression protection, according to IEC 60529
IP 20	Ingression protection, according to IEC 60529, level 20
IP 40	Ingression protection, according to IEC 60529, level 40
IP 54	Ingression protection, according to IEC 60529, level 54
IRF	Internal failure signal
IRIG-B:	InterRange Instrumentation Group Time code format B, standard 200
ITU	International Telecommunications Union
LAN	Local area network
LIB 520	High-voltage software module
LCD	Liquid crystal display
LDCM	Line differential communication module
LDD	Local detection device
LED	Light-emitting diode
LNT	LON network tool
LON	Local operating network
MCB	Miniature circuit breaker
MCM	Mezzanine carrier module
MIM	Milli-ampere module
MPM	Main processing module
MVAL	Value of measurement
MVB	Multifunction vehicle bus. Standardized serial bus originally developed for use in trains.
NCC	National Control Centre
NOF	Number of grid faults

NUM	Numerical module
OCO cycle	Open-close-open cycle
OCP	Overcurrent protection
OEM	Optical Ethernet module
OLTC	On-load tap changer
OTEV	Disturbance data recording initiated by other event than start/pick-up
OV	Overvoltage
Overreach	A term used to describe how the relay behaves during a fault condition. For example, a distance relay is overreaching when the impedance presented to it is smaller than the apparent impedance to the fault applied to the balance point, that is, the set reach. The relay “sees” the fault but perhaps it should not have seen it.
PCI	Peripheral component interconnect, a local data bus
PCM	Pulse code modulation
PCM600	Protection and control IED manager
PC-MIP	Mezzanine card standard
PMC	PCI Mezzanine card
POR	Permissive overreach
POTT	Permissive overreach transfer trip
Process bus	Bus or LAN used at the process level, that is, in near proximity to the measured and/or controlled components
PSM	Power supply module
PST	Parameter setting tool within PCM600
PT ratio	Potential transformer or voltage transformer ratio
PUTT	Permissive underreach transfer trip
RASC	Synchrocheck relay, COMBIFLEX
RCA	Relay characteristic angle
RISC	Reduced instruction set computer
RMS value	Root mean square value
RS422	A balanced serial interface for the transmission of digital data in point-to-point connections
RS485	Serial link according to EIA standard RS485
RTC	Real-time clock
RTU	Remote terminal unit
SA	Substation Automation

SBO	Select-before-operate
SC	Switch or push button to close
SCL	Short circuit location
SCS	Station control system
SCADA	Supervision, control and data acquisition
SCT	System configuration tool according to standard IEC 61850
SDU	Service data unit
SLM	Serial communication module.
SMA connector	Subminiature version A, A threaded connector with constant impedance.
SMT	Signal matrix tool within PCM600
SMS	Station monitoring system
SNTP	Simple network time protocol – is used to synchronize computer clocks on local area networks. This reduces the requirement to have accurate hardware clocks in every embedded system in a network. Each embedded node can instead synchronize with a remote clock, providing the required accuracy.
SOF	Status of fault
SPA	Strömberg Protection Acquisition (SPA), a serial master/ slave protocol for point-to-point communication
SRY	Switch for CB ready condition
ST	Switch or push button to trip
Starpoint	Neutral point of transformer or generator
SVC	Static VAr compensation
TC	Trip coil
TCS	Trip circuit supervision
TCP	Transmission control protocol. The most common transport layer protocol used on Ethernet and the Internet.
TCP/IP	Transmission control protocol over Internet Protocol. The de facto standard Ethernet protocols incorporated into 4.2BSD Unix. TCP/IP was developed by DARPA for Internet working and encompasses both network layer and transport layer protocols. While TCP and IP specify two protocols at specific protocol layers, TCP/IP is often used to refer to the entire US Department of Defense protocol suite based upon these, including Telnet, FTP, UDP and RDP.
TEF	Time delayed earth-fault protection function

TM	Transmit (disturbance data)
TNC connector	Threaded Neill-Concelman, a threaded constant impedance version of a BNC connector
TP	Trip (recorded fault)
TPZ, TPY, TPX, TPS	Current transformer class according to IEC
TRM	Transformer Module. This module transforms currents and voltages taken from the process into levels suitable for further signal processing.
TYP	Type identification
UMT	User management tool
Underreach	A term used to describe how the relay behaves during a fault condition. For example, a distance relay is underreaching when the impedance presented to it is greater than the apparent impedance to the fault applied to the balance point, that is, the set reach. The relay does not “see” the fault but perhaps it should have seen it. See also Overreach.
UTC	Coordinated Universal Time. A coordinated time scale, maintained by the Bureau International des Poids et Mesures (BIPM), which forms the basis of a coordinated dissemination of standard frequencies and time signals. UTC is derived from International Atomic Time (TAI) by the addition of a whole number of "leap seconds" to synchronize it with Universal Time 1 (UT1), thus allowing for the eccentricity of the Earth's orbit, the rotational axis tilt (23.5 degrees), but still showing the Earth's irregular rotation, on which UT1 is based. The Coordinated Universal Time is expressed using a 24-hour clock, and uses the Gregorian calendar. It is used for aeroplane and ship navigation, where it is also sometimes known by the military name, "Zulu time." "Zulu" in the phonetic alphabet stands for "Z", which stands for longitude zero.
UV	Undervoltage
WEI	Weak end infeed logic
VT	Voltage transformer
X.21	A digital signalling interface primarily used for telecom equipment
$3I_O$	Three times zero-sequence current.Often referred to as the residual or the earth-fault current
$3U_O$	Three times the zero sequence voltage. Often referred to as the residual voltage or the neutral point voltage

Contact us

ABB AB
Substation Automation Products
SE-721 59 Västerås, Sweden
Phone +46 (0) 21 32 50 00
Fax +46 (0) 21 14 69 18

www.abb.com/substationautomation

1MRK 511 303-UEN - © Copyright 2014 ABB. All rights reserved.

Power and productivity
for a better world™