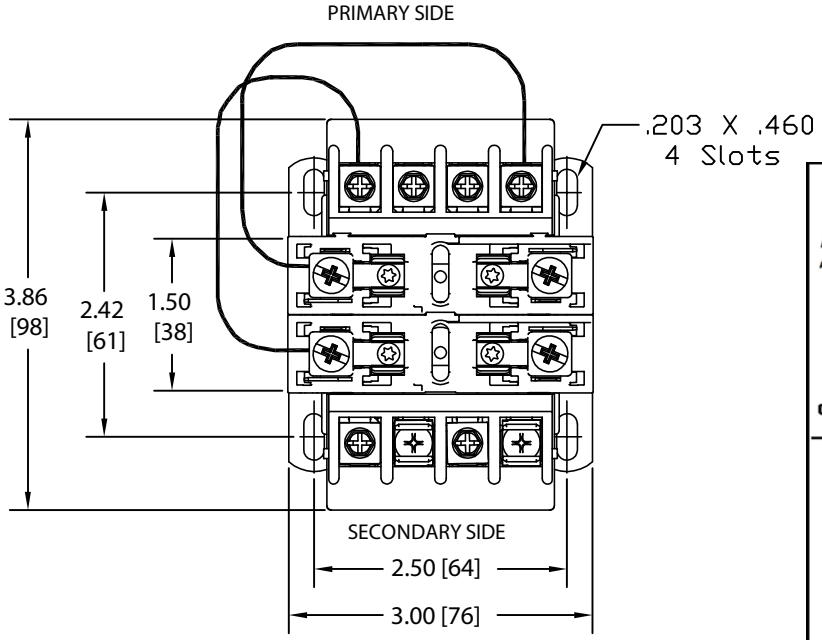

TRANSFORMER SPECIFICATIONS	
PRIMARY VOLTAGE(S)	575 (TRIPLE RATED)
SECONDARY VOLTAGE(S)	115
RATED V.A.	75
RATED FREQUENCY	50/60
INSULATION CLASS	105
AGENCY APPROVALS	UL, CUL
ESTIMATED WEIGHT	3.5 LBS

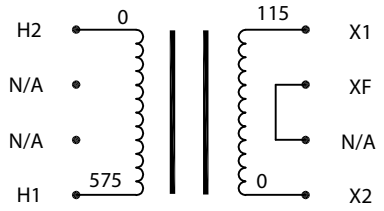

INTERNALLY JUMPERED TO FUSE TERMINAL

CONNECTION DIAGRAM

NOTES:

1. ALL MEASURMENTS IN INCHES (MM)
2. TERMINAL SCREWS ARE COMBO #8-32 PHIL-SLOT-1/4" HEX WITH SEMS WASHER.
3. 2 POLE, CLASS "CC" PRIMARY FUSE BLOCK, ACCOMMODATES TWO 13/32" X 1-1/2" CLASS "CC" FUSES.
4. SECONDARY FUSE CLIP ACCOMMODATES ONE 13/32" X 1-1/2" MIDGET FUSE.

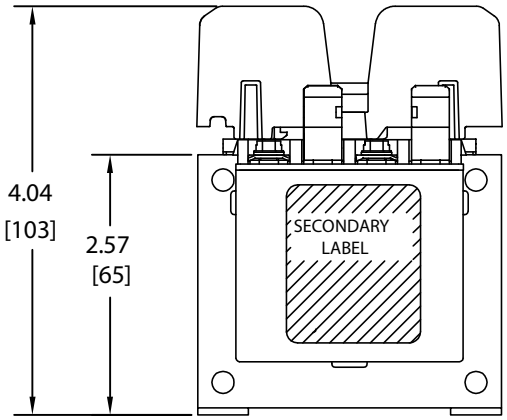

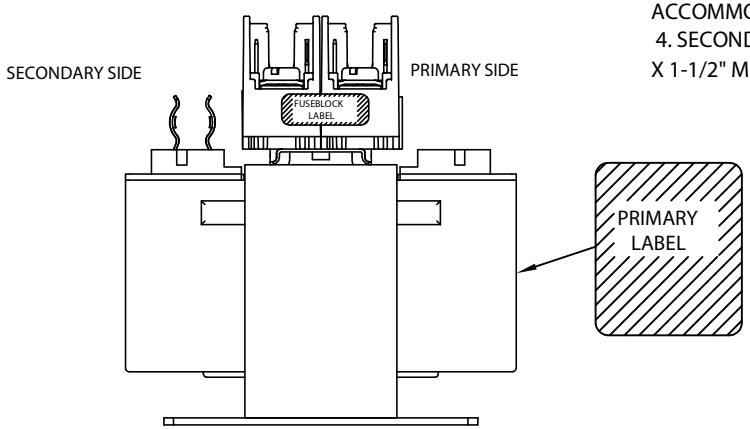

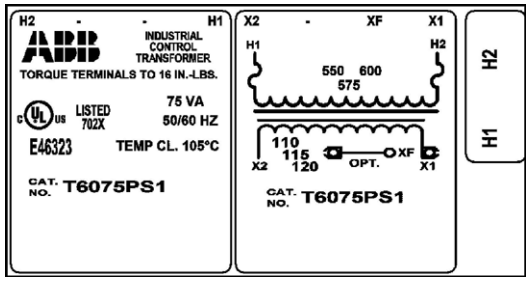

PACKAGED ACCESSORIES	
-	-

A	I3 CONSTRUCTION AN006422	JW	10/7/19
ECL	REVISIONS	BY	DATE

ABB

DATE	DRAWN	CHECKED	APPROVED
10/7/19	JAW		
RELEASE DATE			

1TQY200060X0009

SIZE	SCALE	
C	NONE	T6075PS1