ABB GENERAL PURPOSE DRIVES

ACS580-01 IP66 (UL Type 4X) drives, IEC types

Quick installation and start-up guide

This guide is applicable to the global product types. There is a separate guide for the North American product types.

Documentation in other languages	Ecodesign information (EU 2019/1781 and SI 2021 No. 745)	About this document
		3AXD50001020187 Rev B EN 2024-05-22 © 2024 ABB. All rights reserved. Original instructions. 3AXD50001020187B

Safety instructions

WARNING! Obey these instructions. If you ignore them, injury or death, or damage to the equipment can occur. If you are not a qualified electrical professional, do not do electrical installation or maintenance work.

WARNING! Before you activate the automatic fault reset or automatic restart functions of the drive control program, make sure that no dangerous situations can occur. These functions reset the drive automatically and continue operation after a fault or supply break. If these functions are activated, the installation must be clearly marked as defined in IEC/EN/UL 61800-5-1, subclause 6.5.3, for example, “THIS MACHINE STARTS AUTOMATICALLY”.

- Do not do work on the drive, motor cable, motor, or control cables when the drive is connected to the input power. Before you start the work, isolate the drive from all dangerous voltage sources and make sure that it is safe to start the work. Always wait for 5 minutes after disconnecting the input power to let the intermediate circuit capacitors discharge.
- Do not do work on the drive when a rotating permanent magnet motor is connected to it. A rotating permanent magnet motor energizes the drive, including its input and output terminals.
- Do not tilt the drive. The drive is heavy and has a high center of gravity. It can topple accidentally.
- All frames have lifting eyes to assist with lifting.
- Frames R3: Lifting the drive with a lifting device is recommended since weight exceeds 50 lb (23 kg)

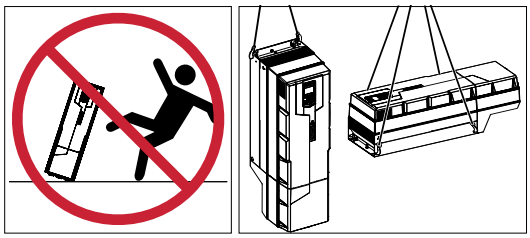

1. Unpack the drive

Keep the drive in its package until you are ready to install it. Make sure that these items are included:

- drive
- mounting template
- control panel (factory-installed inside the cover)
- quick installation and start-up guide
- multilingual residual voltage warning stickers
- hardware and firmware manuals, if ordered
- options in separate packages, if ordered.

Make sure that there are no signs of damage to the items.

2. Reform the capacitors

If the drive has not been powered up for a year or more, you must reform the DC link capacitors. See Related documents or contact ABB technical support.

3. Select the cables and fuses

Obey the local regulations for the environment in which the drive will be installed.

Input power cable: Use symmetrical shielded cable (VFD cable) for the best EMC performance.

Motor cable: Use symmetrically shielded VFD motor cable to reduce bearing current and wear and stress on motor insulation to provide the best EMC performance.

Wet locations and underground cable: Use liquid-tight conduit in wet, dirty, dusty, corrosive or similar locations when using conduit. Usage of Non-metallic conduit underground and in wet locations is allowed. However, these installations inherently have an increased chance for nuisance problems due to the potential for water/moisture in the conduit. Water/moisture in the conduit increases the likelihood of VFD faults or warnings. Proper installation is required to make sure there is no intrusion of water/moisture.

For more information: see Hardware Manual, section Electrical Installation – Global (IEC)

- **Power cable types:** Use only copper conductors.
- **Current rating:** max. load current.
- **Voltage rating minimum:** 600 V AC
- **Temperature rating:** In IEC installations, select a cable rated for at least 70 °C (158 °F) maximum permissible temperature of conductor in continuous use. Insulation temperature can be higher as long as the ampacity is based on 75 °C conductors.
- **Size:** Refer to Ratings, fuses and typical power cable sizes and to Terminal data for power connections.

- Select the control cables. Use double-shielded twisted-pair cable for analog signals. Use double-shielded or single-shielded cable for the digital, relay and I/O signals. Do not run 24 V and 115/230 V signals in the same cable.
- Protect the drive and input power cable with the correct fuses. Refer to Ratings, fuses and typical power cable sizes.

4. Examine the installation site

Examine the site where you will install the drive. Make sure that:

- Site is dry and clean during the installation. Drive is not watertight until installation is complete.
- The installation site is sufficiently ventilated or cooled to remove heat from the drive.
- The ambient conditions meet the requirements. Refer to Ambient conditions.
- Outdoor installations: protect the drive from direct sunlight to prevent overheating. Drive is UV resistant.
- The installation surface is as close to vertical as possible and strong enough to support the weight of the drive. Refer to Weights and free space requirements
- The installation surface, floor and materials near the drive are not flammable.
- There is sufficient free space around the drive for cooling, maintenance and operation. For the minimum free space requirements, refer to Weights and free space requirements
- There are no sources of strong magnetic fields such as high-current single-core conductors or contactor coils near the drive. A strong magnetic field can cause interference or inaccuracy in the operation of the drive.

5. Install the drive on the wall

Select fasteners that comply with local requirements applicable to wall surface materials, drive weight and application.

Prepare the installation site

1. Make marks with the help of the mounting template. Remove the mounting template before you install the drive on the wall.
2. Drill the holes and put anchors or plugs into the holes.
3. Install the screws. Leave a gap between the screw head and mounting surface.

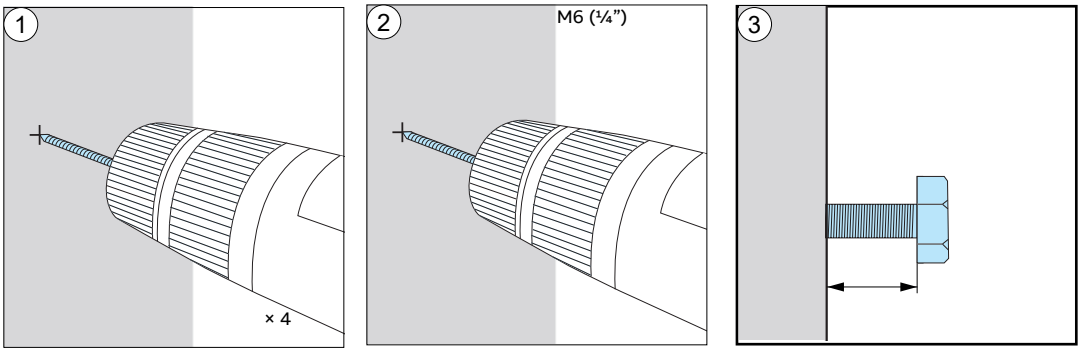

Distance between mounting holes

Frame size	Width (a)		Height (b)	
	mm	in	mm	in
R1	175	6.89	497	19.57
R2	175	6.89	581	22.87
R3	244	9.61	622	24.50

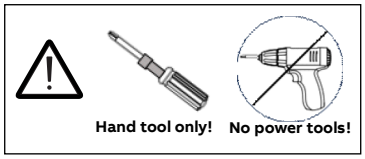

Frame size	Width (a)		Height (b)	
	mm	in	mm	in

Your drive's frame size is shown on the drive nameplate.

Put the drive on the wall and tighten the screws

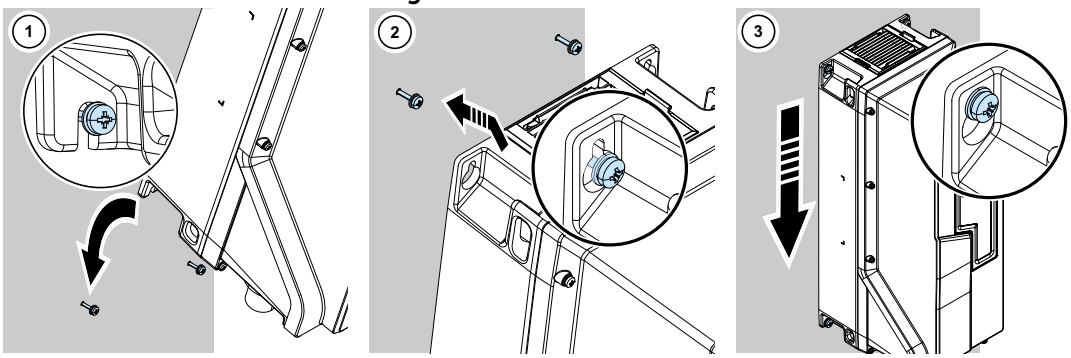

6. Remove the cover(s)

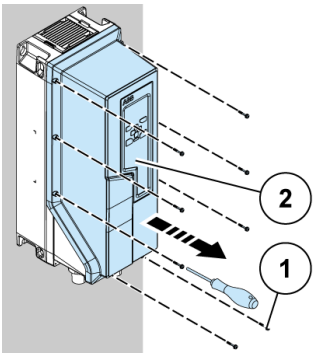

8 screws (Pozidriv #2)

Tighten to 2.5 Nm(1.8 lbf-ft)

7. Optional - remove and replace the cable/conduit box (to modify holes) - 4 screws

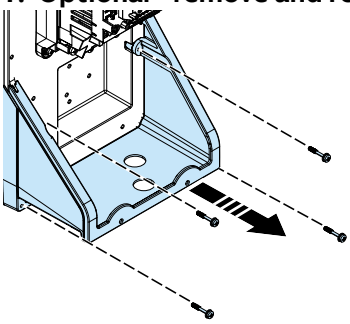

4 screws (Pozidriv #2)

Tighten to 2.5 Nm(1.8 lbf-ft)

WARNING! Cable box screws must be correctly torqued to ensure a water-tight seal.

Use: Hand tool with Pozidriv #2 bit

Torque: 2.5 Nm(1.8 lbf-ft)

DO NOT OVER-TORQUE!

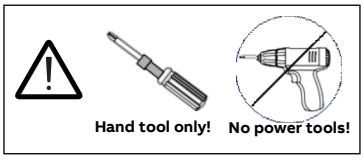

8. Attach a residual voltage warning sticker to the drive in the local language

To the control panel mounting platform.

9. Make sure that the drive is compatible with the grounding system

You can connect all drives to a symmetrically grounded TN-S system (center-grounded wye) without any modifications to the built-in EMC filter or varistors. If you install the drive to a different system, reconfigure the EMC and VAR screws as shown in the table below. The table also shows the optional modifications available.

Frame size	Connection	TN System NEC (B066) Default[3]	TN System IEC (B063) Default[4]	Corner-grounded delta and Midpoint-grounded delta system	IT system	TT system
R1…R3	EMC (DC)	None or plastic	Metal[2]	None or plastic[1]	None or plastic[1]	None or plastic[1]
	VAR	Metal	Metal	None or plastic	None or plastic[1]	None or plastic[1]

1) Metal screw must not be used.
2) Optional, for better noise filtering.
3) NEC (UL) drives (+B066) have these screws installed by default.
4) IEC drives (+B063) have these screws installed by default.

10. Measure the insulation resistance of the power cables and the motor

Measure the insulation resistance of the input cable before you connect it to the drive. Obey local regulations.

Measure the insulation resistance of the motor cable and motor when the cable is disconnected from the drive. Measure the insulation resistance between each phase conductor and the PE conductor. Use a measuring voltage of 1000 V DC. The insulation resistance of an ABB motor must be more than 100 Mohm (reference value at 25 °C or 77 °F). For the insulation resistance of other motors, see the manufacturer's instructions. Moisture inside the motor decreases the insulation resistance. If you think that there is moisture, dry the motor and do the measurement again.

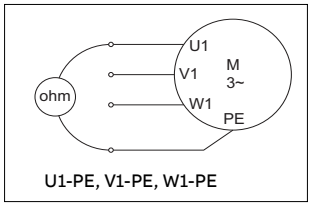

U1-PE, V1-PE, W1-PE

11. Connect the power cables

Connection diagram (shielded cables)

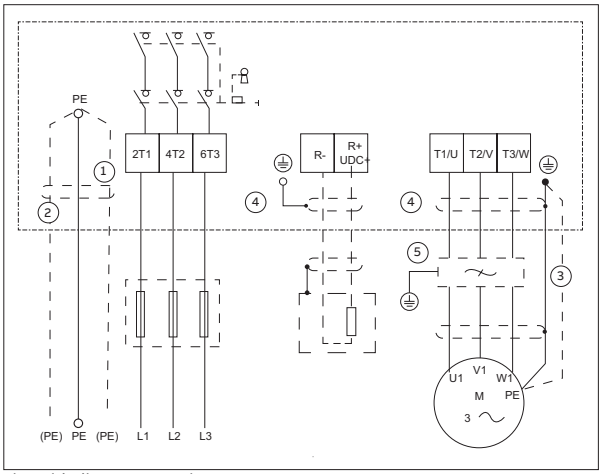

Drive with disconnect option

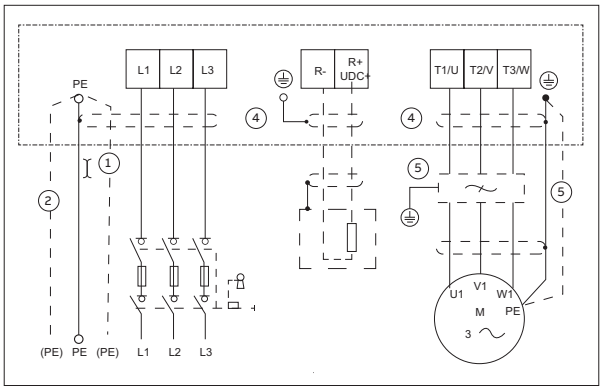

Drive without disconnect option

WARNING: If installing drive indoors or outdoors in a wet, dirty, dusty, corrosive or similar environment, all cable, conduit and glands must be approved for use in this type of environment. Glands must be properly tightened to the drive such that no leakage occurs. Failure to follow these instructions can lead to injury or death, or damage to the equipment.

Frames R1…R3 have a built-in brake chopper. If necessary, you can connect a brake resistor to terminals R-and UDC+/R+. The brake resistor is not included in the drive delivery.

1. Two protective earth (ground) conductors. Drive safety standard IEC/EN/UL 61800-5-1 requires two PE conductors if the cross-sectional area of the PE conductor is less than 10 mm^2 Cu. For example, you can use the cable shield in addition to the fourth conductor.
2. Use a separate grounding cable or a cable with a separate PE conductor for the line side if the conductivity of the fourth conductor or shield does not meet the requirements for the PE conductor.
3. Use a separate grounding cable for the motor side if the conductivity of the shield is not sufficient, or if there is no symmetrically constructed PE conductor in.
4. The shield for the motor cable or the brake resistor cable (if used) may be grounded at both ends, using 360 degree grounding at the drive end.
5. If necessary, install an external filter (du/dt, common mode, or sine filter). Filters are available from ABB.

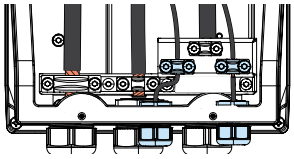

Grounding shelf

Connection procedure

1. Prepare the power cables (shielded cable).
   - Prepare the ends of the input power cable and motor cable as illustrated in the figure below.
   - Install the cord grips and the grounding shelf. For easier installation, don't install (or remove) the top section of the shelf until after the power cables are installed. The top section is for control wires.
   - Slide the cables through the grip. After wires are terminated, complete installation by tightening the cord grip to achieve a water-tight seal.

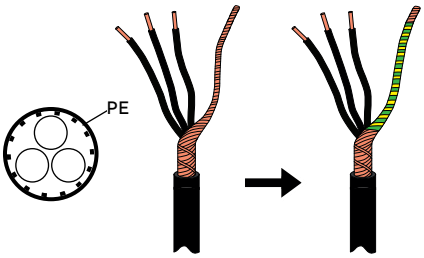

2. Connect the power cables. For the tightening torques, refer to Terminal data for power connections.

- Connect the conductors:
  - Connect the phase conductors of the motor cable to terminals T1/U, T2/V and T3/W. Connect the twisted shield of the cable to the grounding terminal. (3a)
  - Connect the phase conductors of the input power cable as was done for the motor cabling. Use terminals L1, L2 and L3 if no disconnect option is present. When an optional disconnect is present, connect the input power cable conductors to the disconnect switch at terminals 2T1, 4T2 and 6T3. (3b)
  - If used, connect the brake resistor cables.

3. Secure the conduit (if used) outside the unit mechanically. In wet, dirty, dusty, corrosive or similar locations, all cord grips must be properly tight and secured such that no leakage can occur.
4. Ground the motor cable shield at the motor end. For minimum radio frequency interference, ground the motor cable shield 360 degrees at the cable entry of the motor terminal box.

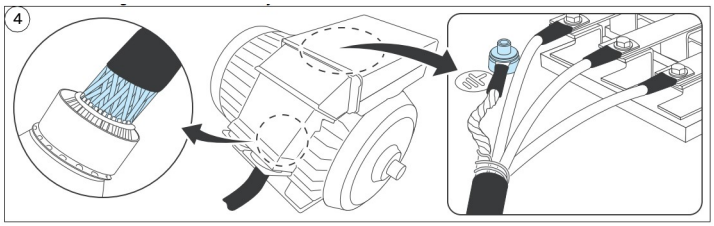

R1…R2 without disconnect

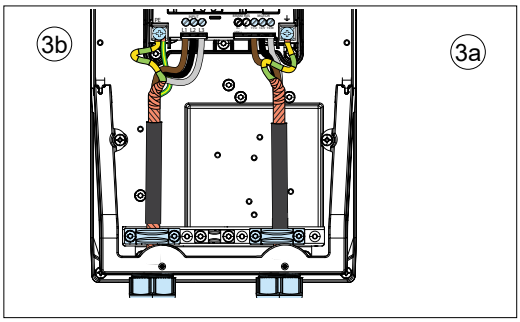

R1...R2 with disconnect

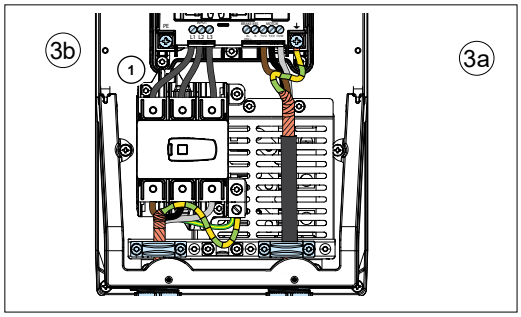

R3 without disconnect

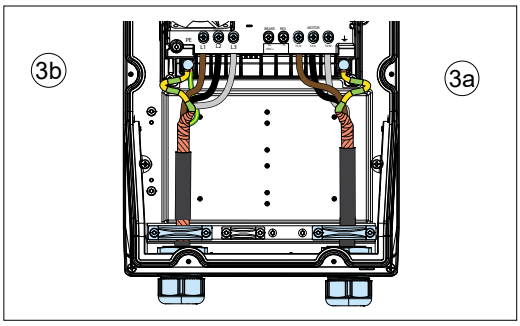

R3 with disconnect

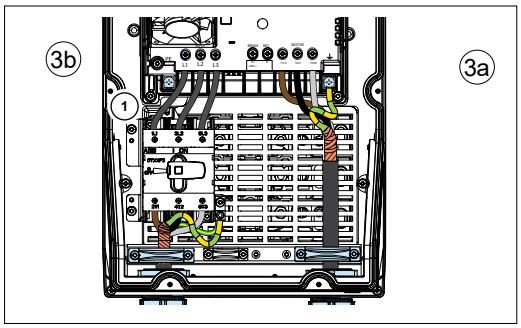

Note 1: Internal fuse block is wired between the disconnect and the drive

12. Connect the control cables

Make the connections according to the application. Keep the signal wire pairs twisted as near to the terminals as possible.

1. Attach cord grip to the small cable entry hole. Slide the control cables through the cord grip.
2. Attach the top shelf of the grounding shelf assembly. Ground the shield at one end of the cable only. If you ground the shield at the source of the signal, do not ground it at the SCR terminal.
3. Tie all control cables to the provided cable tie mounts.
4. Secure the conduit outside the unit mechanically. In wet, dirty, dusty, corrosive or similar locations, all cord grips must be properly tightened and secured such that no leakage can occur.

Default I/O connections (ABB standard macro)

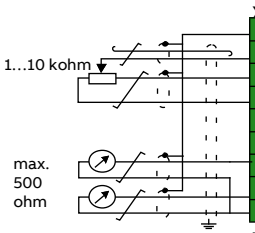

X1		Reference voltage and analog inputs and outputs
1	SCR	Signal cable shield (screen)
2	AI1	Ext. frequency reference 1: 0 … 10 V
3	AGND	Analog input circuit common
4	+10V	Reference voltage 10 V DC
5	AI2	Not configured
6	AGND	Analog input circuit common
7	AO1	Output frequency: 0 … 20 mA
8	AO2	Output current: 0 … 20 mA
9	AGND	Analog output circuit common

X2 & X3		Aux. voltage output and programmable digital inputs
10	+24V	Aux. voltage output +24 V DC, max. 250 mA
11	DGND	Aux. voltage output common
12	DCOM	Digital input common for all
13	DI1	Stop (0) / Start (1)
14	DI2	Forward (0) / Reverse (1)
15	DI3	Constant frequency/speed selection
16	DI4	Constant frequency/speed selection
17	DI5	Ramp set 1 (0) / Ramp set 2 (1)
18	DI6	Not configured

X6, X7, X8		Relay outputs	
19	RO1C		Ready run
20	RO1A		250 V AC / 30 V DC
21	RO1B		2 A
22	RO2C		Running
23	RO2A		250 V AC / 30 V DC
24	RO2B		2 A
25	RO3C		Fault (-1)
26	RO3A		250 V AC / 30 V DC
27	RO3B		2 A

X5		Embedded fieldbus
29	B+	Embedded Modbus RTU (EIA-485)
30	A-	
31	DGND	
S4	TERM	Serial data link termination switch
S5	BIAS	Serial data link bias resistors switch

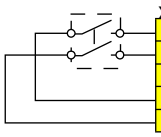

X4		Safe torque off
34	OUT1	Safe torque off (STO). Both circuits must be closed for the drive to start. The drawing shows the simplified connection of a safety circuit through safety contacts. If STO is not used, leave the factory-installed jumpers in place. See also section Safe Torque Off (STO).
35	OUT2	
36	SGND	
37	IN1	
38	IN2	

Total load capacity of the auxiliary voltage output +24V (X2:10) is 6.0 W (250 mA / 24 V DC).

Terminals	Wire size	Tightening torque
+24V, DGND, DCOM, B+, A-, DGND, Ext. 24V	0.2 … 2.5 mm^2 (24 … 14 AWG)	0.5 … 0.6 N·m (5 lbf·in)
DI, AI, AO, AGND, RO, OUT, IN, SGND	0.14 … 1.5 mm^2 (26 … 16 AWG)	

Control cable installation examples

This section shows examples for routing the control cables. Utilize the retaining clips along the edge of the controller.

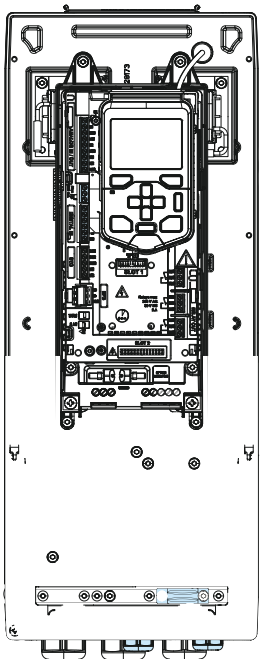

EIA-485 embedded fieldbus connection

You can connect the drive to a serial communication link with a fieldbus adapter module or the embedded fieldbus interface. The embedded fieldbus interface supports Modbus RTU.

To configure Modbus RTU communication with the embedded fieldbus:

1. Connect the fieldbus cable and the required I/O signals. Use Belden 9842 or equivalent. Belden 9842 is a dual twisted, shielded pair cable with a wave impedance of 120 Ohms.
2. If the drive is at the end of the fieldbus, set the termination switch to ON.
3. Power up the drive and set the required parameters. Refer to Motor overload protection.

Overview and connection diagrams for connecting the drive to the fieldbus are shown below.

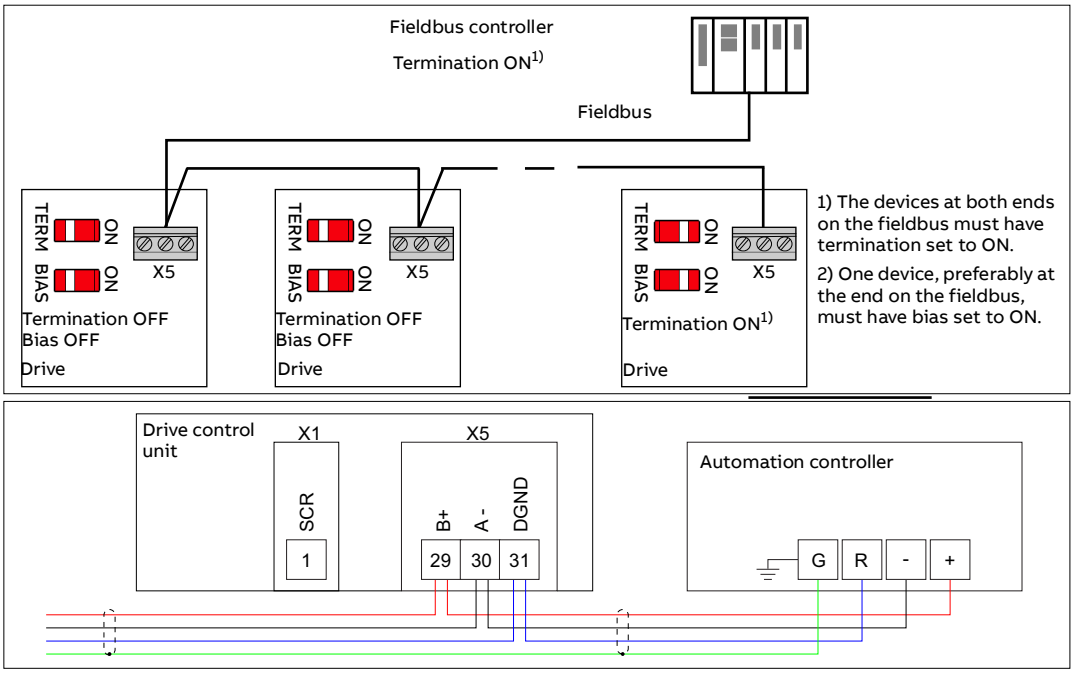

- Connect the cable shields together at each drive, but do not connect them to the drive.
- Connect the shield only to terminal “G” (ground) in the automation controller.
- Connect the DGND conductor to terminal “R” (reference) in the automation controller.

13. Install optional modules, if included in the delivery

14. Before installing the cover, for outdoor installations in conditions when dew or frost is possible: take extra precautions to help prevent the formation of condensation within the drive. This includes:

1. Seal the conduit openings: Cold damp air can enter the drive through the conduit under the right conditions causing frost to form in the cable box. Use a sealant around the wires to prevent air infiltration through the conduit.
2. Enclose the drive with dry air: Very little air is allowed into the drive cavity once the cover is secured. Closing the cover when the ambient air is dry will help prevent condensation from forming. Close the drive when the ambient air is cold (below freezing) or when it is warm but with low RH (relative humidity): 21 °C (70 °F) with RH < 40%; 27 °C (80 °F) with RH < 30%.
3. Maintain power to the drive at all times: Whenever the drive is powered up, even when the motor is not being controlled, the drive will generate heat and the internal fan will run. This will help prevent condensation.

15. Install the cover(s)

The cover installation procedure is the opposite of the removal procedure.Tighten the eight screws until the cover is flush with the heat sink applying 2.5 Nm (1.8 ft-lb) of torque using a Pozidriv #2 bit. Use hand tool only. Do not use power tools. Refer to Remove the cover(s). Notice: Some bowing of the cover between screws is normal.

WARNING! Cover screws must be correctly torqued to ensure a water-tight seal.

Use: Hand tool with Pozidriv #2 bit

Torque: 2.5 Nm (1.8 lbf-ft)

DO NOT OVER-TORQUE!

16. Start up the drive

WARNING! Before you start up the drive, make sure that the installation is completed. Make sure also that it is safe to start the motor. Disconnect the motor from other machinery if there is a risk of damage or injury.

Use the control panel to do the start-up procedure. The two commands at the bottom of the display show the functions of the two softkeys and located below the display. The commands assigned to the softkeys are different

depending on the context. Use the arrow keys ◄, ►, ▲ and ▼ to move the cursor or change values depending on the active view. Key ? shows a context-sensitive help page.

1.	Power up the drive. Make sure that you have the motor name plate data available.	
2.	The First start assistant guides you through the first start-up. The assistant begins automatically. Wait until the control panel shows the language selection screen. Select the language you want to use and press (**OK**). **Note:** After you select the language, it takes a few minutes for the control panel to wake up.	
3.	Select **Start set-up** and press (**Next**).	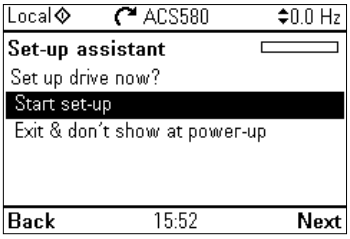
4.	Select the localization you want to use and press (**Next**).	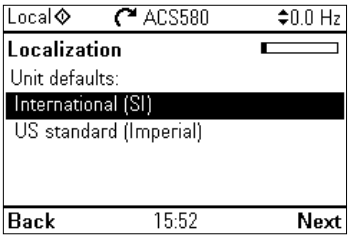
5.	To complete the first start assistant, select the values and settings when prompted by the assistant. Continue until the panel shows that the first start is complete. When the panel shows that the first start is complete, the drive is ready for use. Press (**Done**) to enter the Home view.	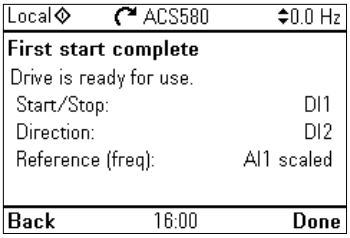
6.	The Home view shows the values of the selected signals.	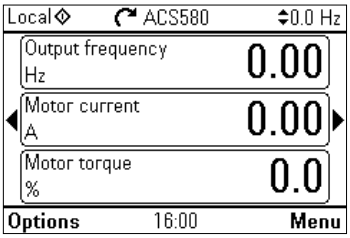

7.	Make additional adjustments, for example macro, ramps and limits, starting from the Main menu. Press (**Menu**) in the Home view to enter the Main menu. Select **Primary settings** and press (**Select**) (or). With the Primary settings menu, you can adjust settings related to the motor, PID, fieldbus, advanced functions and clock, region and display. You can also reset logs, parameters, and the control panel Home view. ABB recommends that you make at least these additional settings: • Choose a macro or set start, stop and reference values separately • Ramps • Limits. To get more information on the Primary settings menu items, press ? to open the help page.	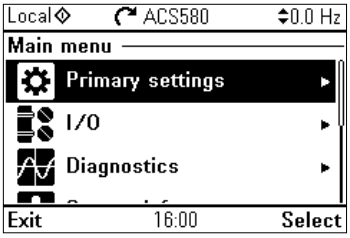 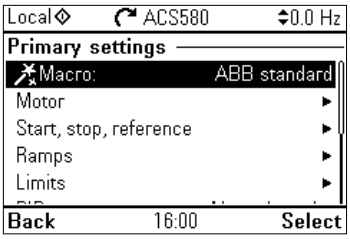

Motor overload protection

The motor thermal overload protection is set to motor current and motor class curves as default. Motor thermal overload protection can also be measured using motor temperature devices or can be estimated using a motor model defined by parameters. To enable protection using motor model parameters or measurement devices set parameter 35.11 and subsequent parameters through 35.55. To adjust motor class curves (default is class 20), change parameters 35.56 and 35.57.

Use the information key (?) on the drive control panel for more information on setting group 35 parameters. You must set the drive overload parameters correctly, or motor damage could occur.

Fieldbus communication

To configure the embedded fieldbus communication for Modbus RTU, you must set at least these parameters:

Parameter	Setting	Description
20.01 Ext1 commands	Embedded fieldbus	Selects fieldbus as the source for the start and stop commands when EXT1 is selected as the active control location.
22.11 Ext1 speed ref1	EFB ref1	Selects a reference received through the embedded fieldbus interface as speed reference 1. Use this parameter with the vector motor control mode.
26.11 Torque ref1 source	EFB ref1	Selects a reference received through the embedded fieldbus interface as torque reference 1. Use this parameter with the vector motor control mode.
28.11 Ext1 frequency ref1	EFB ref1	Selects a reference received through the embedded fieldbus interface as frequency reference 1. Use this parameter with the frequency motor control mode.
58.01 Protocol enable	Modbus RTU	Initializes embedded fieldbus communication.
58.03 Node address	1 (default)	Node address. There must be no two nodes with the same node address online.
58.04 Baud rate	19.2 kbps (default)	Defines the communication speed of the link. Use the same setting as in the master station.
58.05 Parity	8 EVEN 1 (default)	Selects the parity and stop bit setting. Use the same setting as in the master station.
58.06 Communication control	Refresh settings	Validates any changed EFB configuration settings. Use this after changing any parameters in group 58.

Other parameters related to the fieldbus configuration:

58.14 Communication loss action	58.17 Transmit delay	58.28 EFB act1 type	58.34 Word order
58.15 Communication loss mode	58.25 Control profile	58.31 EFB act1 transparent source	58.101 Data I/O 1 … 58.114 Data I/O 14
58.16 Communication loss time	58.26 EFB ref1 type	58.33 Addressing mode	

Warnings and faults

Warning	Fault	Aux. code	Description
A2A1	2281	Current calibration	Warning: Current calibration is done at the next start. Fault: Output phase current measurement fault.
A2B1	2310	Overcurrent	The output current is more than the internal limit. This can also be caused by an earth fault or phase loss.
A2B3	2330	Earth leakage	A load unbalance that is typically caused by an earth fault in the motor or the motor cable.
A2B4	2340	Short circuit	There is a short-circuit in the motor or the motor cable.
-	3130	Input phase loss	The intermediate DC circuit voltage oscillates due to missing input power line phase.
-	3181	Wiring or earth fault	Incorrect input and motor cable connection.
A3A1	3210	DC link overvoltage	Intermediate DC circuit voltage is too high.
A3A2	3220	DC link undervoltage	Intermediate DC circuit voltage is too low.
-	3381	Output phase loss	All three phases are not connected to the motor.
-	5090	STO hardware failure	STO hardware diagnostics has detected hardware failure. Contact ABB.
A5A0	5091	Safe torque off	The Safe torque off (STO) function is active.
A7CE	6681	EFB comm loss	Break in embedded fieldbus communication.
A7C1	7510	FBA A communication	Communication lost between drive (or PLC) and fieldbus adapter.
A7AB	-	Extension I/O configuration failure	The installed C-type module is not the same as configured, or there is an error in the communication between the drive and module.
AFF6	-	Identification run	The motor ID run occurs at the next start.
-	FA81	Safe torque off 1	The Safe torque off circuit 1 is broken.
-	FA82	Safe torque off 2	The Safe torque off circuit 2 is broken.

Ratings, fuses and typical power cable sizes

ACS580-01-...	Nominal ratings						Fuses [2]			Typical power cable sizes, Cu		Frame size
	Input current		Output current		Motor power [1]		gGfuse (IEC 60269)	uR/aR fuse [3] [4] (DIN 43620)	UL class T [5]			
	I_1	I_1 (480 V)	I_2	I_2 (480 V)	P_n		ABB type	Bussmann type				
	A		A		kW	hp				mm^2 [6] [7]	AWG [8]	
U_n = 3-phase 230 V												
04A7-2	4.7	-	4.7	-	0.75	1	OFAF000H25	170M1563	JJS-15	3×6.0 + 6.0	14	R1
06A7-2	6.7	-	6.7	-	1.1	1.5	OFAF000H25	170M1563	JJS-15	3×6.0 + 6.0	14	R1
07A6-2	7.6	-	7.6	-	1.5	2	OFAF000H25	170M1563	JJS-15	3×6.0 + 6.0	14	R1
012A-2	12	-	12	-	3	3	OFAF000H25	170M1563	JJS-15	3×6.0 + 6.0	14	R1
018A-2	16.9	-	16.9	-	4	5	OFAF000H25	170M1563	JJS-30	3×6.0 + 6.0	10	R1
025A-2	24.5	-	24.5	-	5.5	7.5	OFAF000H40	170M1565	JJS-40	3×6.0 + 6.0	8	R2
032A-2	31.2	-	31.2	-	7.5	10	OFAF000H40	170M1565	JJS-40	3×6.0 + 6.0	8	R2
047A-2	46.7	-	46.7	-	11	15	OFAF000H63	170M1566	JJS-80	3×10 + 10	6	R3
060A-2	60	-	60	-	15	20	OFAF000H63	170M1566	JJS-80	3×16 + 16	4	R3
U_n = 3-phase 400 V or 480 V												
02A7-4	2.6	2.1	2.6	2.1	0.75	1	OFAF000H4	170M1561	JJS-15	3×6.0 + 6.0	14	R1
03A4-4	3.3	3	3.3	3	1.1	1.5	OFAF000H6	170M1561	JJS-15	3×6.0 + 6.0	14	R1
04A1-4	4	3.4	4	3.4	1.5	2	OFAF000H6	170M1561	JJS-15	3×6.0 + 6.0	14	R1
05A7-4	5.6	4.8	5.6	4.8	2.2	3	OFAF000H10	170M1561	JJS-15	3×6.0 + 6.0	14	R1
07A3-4	7.2	6	7.2	6	3	3	OFAF000H10	170M1561	JJS-15	3×6.0 + 6.0	14	R1
09A5-4	9.4	7.6	9.4	7.6	4	5	OFAF000H16	170M1561	JJS-15	3×6.0 + 6.0	14	R1
12A7-4	12.6	11	12.6	11	5.5	7.5	OFAF000H16	170M1561	JJS-15	3×6.0 + 6.0	14	R1
018A-4	17	14	17	14	7.5	10	OFAF000H25	170M1563	JJS-30	3×6.0 + 6.0	12	R2
026A-4	25	21	25	21	11	15	OFAF000H32	170M1563	JJS-30	3×6.0 + 6.0	10	R2
033A-4	32	27	32	27	15	20	OFAF000H40	170M1565	JJS-40	3×10 + 10	8	R3
039A-4	38	34	38	34	18.5	25	OFAF000H50	170M1565	JJS-60	3×10 + 10	8	R3
046A-4	45	40	45	40	22	30	OFAF000H63	170M1566	JJS-60	3×10 + 10	6	R3

ACS580-01-...	Nominal ratings						Fuses 2)			Typical power cable sizes, Cu		Frame size
	Input current		Output current		Motor power 1)		gGfuse (IEC 60269)	uR/aR fuse 3) 4) (DIN 43620)	UL class T 5)			
	I_1	I_1 (480 V)	I_2	I_2 (480 V)	P_n		ABB type	Bussmann type				
	A		A		kW	hp				mm² 6) 7)	AWG 8)	

1) P_N = typical motor power with no overload capacity (nominal use). The kilowatt ratings apply to most IEC 4-pole motors. The horsepower ratings apply to most NEMA 4-pole motors.
2) The recommended branch protection fuses that must be used to maintain the IEC/EN/UL 61800-5-1 listing.
3) For IEC installations, ABB recommends aR fuses. See hardware manual for guidelines in selecting between aR and gG fuses, and for additional fuse alternatives.
4) IEC 61439-1: The drive is suitable for use on a circuit capable of delivering not more than 65 kA when protected by the fuses given in this table.
5) UL 61800-5-1, CSA C22.2 No. 274: The drive is suitable for use on a circuit capable of delivering not more than 100,000 symmetrical Amperes (rms) at 600 V maximum when protected by the ABB recommended fuses, internally or externally.
6) IEC Installations: The cable sizing is based on max. 9 cables laid on a cable ladder side by side, three ladder type trays one on top of the other, ambient temperature 30 °C, PVC insulation, surface temperature 70 °C (EN 60204-1 and IEC 60364-5-52/2001). For other conditions, size the cables according to local safety regulations, appropriate input voltage and the load current of the drive.
7) IEC installations: Where 6 mm² is typical, minimum 2.5 mm² (4.0 mm² for 025A-2) is allowed when permitted according to note 6. (Does not apply to 032A-2 or 026A-4)
8) NEC Installations: The cable sizing is based on NEC Table 310-15 for copper wires, 75 °C (167 °F) wire insulation at 40 °C (104 °F) ambient temperature. Not more than three current-carrying conductors in raceway or cable or earth (directly buried). For other conditions, size the cables according to local safety regulations, appropriate input voltage and the load current of the drive.

Terminal data for power connections

Input power cables with disconnect switch option (F253)

Frame size	2T1, 4T2, 6T3						PE (same ground lug for all three frames)			
	Min. wire size (solid/stranded)		Max. wire size (solid/stranded)		Tightening torque		Max. wire size (solid/stranded)		Tightening torque	
	mm²	AWG	mm²	AWG	N·m	lbf·ft	mm²	AWG	N·m	lbf·ft
R1	2.5	14	25	4	6.2	4.6	2.5/2.5	14	4.0	2.9
R2	2.5	14	25	4	6.2	4.6	10/10	8	4.5	3.3
R3	2.5	14	25	4	6.2	4.6	35/35	2	5.1	3.8

Input power cables without disconnect switch option

Frame size	L1, L2, L3						PE			
	Min. wire size (solid/stranded)		Max. wire size (solid/stranded)		Tightening torque		Max. wire size (solid/stranded)		Tightening torque	
	mm²	AWG	mm²	AWG	N·m	lbf·ft	mm²	AWG	N·m	lbf·ft
R1	0.2/0.2	24	6/4	10	1.0	0.7	16/16	6	1.5	1.1
R2	0.5/0.5	20	16/16	6	1.5	1.1	16/16	6	1.5	1.1
R3	0.5/0.5	20	35/25	2	3.5	2.6	35/35	2	1.5	1.1

Output power cables

Frame size	T1/U, T2/V, T3/W, R-, R+/UDC+						PE			
	Min. wire size (solid/stranded)		Max. wire size (solid/stranded)		Tightening torque		Max. wire size (solid/stranded)		Tightening torque	
	mm²	AWG	mm²	AWG	N·m	lbf·ft	mm²	AWG	N·m	lbf·ft
R1	0.2/0.2	24	6/4	10	1.0	0.7	16/16	6	1.5	1.1
R2	0.5/0.5	20	16/16	6	1.5	1.1	16/16	6	1.5	1.1
R3	0.5/0.5	20	35/25	2	3.5	2.6	35/35	2	1.5	1.1

Notes:

- The minimum specified wire size does not necessarily have sufficient current carrying capacity at maximum load.
- The maximum number of conductors per terminal is 1 except where indicated.

Weights and free space requirements

Frame size	Weights		Weights with Sunshield		Free space requirements for vertical installation									
					Stand alone						Side by side [1]			
					Above		Below		Sides		Above		Below	
	kg	lb	kg	lb	mm	in	mm	in	mm	in	mm	in	mm	in
R1	12.7	28	16	35	65	2.6	50	2.0	150	5.9	200	7.9	200	7.9
R2	15.5	34	18.8	41	65	2.6	50	2.0	150	5.9	200	7.9	200	7.9
R3	25.5	56	29.4	65	65	2.6	50	2.0	150	5.9	200	7.9	200	7.9

1) Without free space on the sides.

Frame size	Free space requirements for horizontal installation							
	Fan side		Cable box side		Above		Below	
	mm	in	mm	in	mm	in	mm	in
R1 - R2	150	5.9	50	2.0	30	1.2	200	7.9
R3	200	7.9	50	2.0	30	1.2	200	7.9

Ambient conditions

This table shows the requirements for the ambient conditions when the drive is in operation (installed for stationary use).

Installation altitude	0 … 4000 m (0 … 13123 ft) above sea level. The output current must be derated at altitudes above 1000 m (3281 ft). The derating is 1% for each added 100 m (328 ft) above 1000 m (3281 ft). Above 2000 m (6562 ft), these grounding systems are permitted: TN-S (center-grounded wye), TT, and IT (ungrounded or high-resistance symmetrically grounded). For the installation requirements for corner-grounded systems at this altitude, contact your local ABB representative.
Surrounding air temperature	Operation: -25 … +50 °C (-13 … 122 °F). No frost permitted. At temperatures over 40 °C (104 °F), the rated output current must be derated by 1% for each added 1 °C (1.8 °F). Storage (in the package): -40 to +70 °C (-40 to +158 °F).
Relative humidity	5 … 95%. No condensation permitted. Maximum permitted relative humidity is 60% in the presence of corrosive gases.
Contamination levels (IEC 60721-3-3: 2002)	Chemical gases: Class 3C3/C4 Solid particles: Class 3S2. No conductive dust permitted.
Vibration	Per IEC-60068-2-6

Safe Torque Off (STO)

The drive has a Safe torque off function (STO) in accordance with IEC/EN 61800-5-2. It can be used, for example, as the final actuator device of safety circuits that stop the drive in case of danger (such as an emergency stop circuit).

When activated, the STO function disables the control voltage for the power semiconductors of the drive output stage, thus preventing the drive from generating the torque required to rotate the motor. The control program generates an indication as defined by parameter 31.22. If the motor is running when Safe torque off is activated, it coasts to a stop. Closing the activation switch deactivates the STO. Any faults generated must be reset before restarting.

The STO function has a redundant architecture, that is, both channels must be used in the safety function implementation. The safety data given is calculated for redundant use, and does not apply if both channels are not used.

WARNING! The STO function does not disconnect the voltage from the main and auxiliary circuits of the drive.

Notes:

- If stopping by coasting is not acceptable, stop the drive and machinery using the appropriate stop mode before activating the STO.
- The STO function overrides all other functions of the drive.

Wiring

The safety contacts must open/close within 200 ms of each other.

Double-shielded twisted-pair cable is recommended for the connection. The maximum length of the cabling between the switch and the drive control unit is 300 m (1000 ft). Ground the shield of the cable at the control unit only.

Validation

To ensure the safe operation of a safety function, a validation test is required. The test must be carried out by a competent person with adequate expertise and knowledge of the safety function. The test procedures and report must be documented and signed by this person. Validation instructions of the STO function can be found in the drive hardware manual.

Technical data

- Minimum voltage at IN1 and IN2 to be interpreted as “1”: 13 V DC
- STO reaction time (shortest detectable break): 1 ms
- STO response time: 2 ms (typical), 5 ms (maximum)
- Fault detection time: Channels in different states for longer than 200 ms
- Fault reaction time: Fault detection time + 10 ms
- STO fault indication (parameter 31.22) delay: < 500 ms
- STO warning indication (parameter 31.22) delay: < 1000 ms
- Safety integrity level (EN 62061): SIL 3
- Performance level (EN ISO 13849-1): PL e

The drive STO is a type A safety component as defined in IEC 61508-2.

For the full safety data, exact failure rates and failure modes of the STO function, refer to the drive hardware manual.

Markings

The applicable markings are shown on the type designation label of the drive.

CE UL 1 RCM NSF WEEE TÜV Nord UKCA

Related documents

Document	Code (English)
ACS580-01 (0.75 to 250 kW, 1.0 to 350 hp) hardware manual	3AXD50000044794
ACS580 standard control program firmware manual	3AXD50000016097
ACS-AP-I, -S, -W and ACH-AP-H, -W Assistant control panels user's manual	3AUA0000085685
Drive composer PC tool user's manual	3AUA0000094606
Converter module capacitor reforming instructions	3BFE64059629
Declaration of China RoHS II Conformity	3AXD10001497378

Declarations of conformity

EU Declaration of Conformity_3AXD10001818627

UK Declaration of Conformity_3AXD10001919078