Configuration, programming and setting tool package

CAP 535*1.1

1MRK 511 086-BEN
Page 1
Issued: March 2001
Changed since: October 2000
Data subject to change without notice

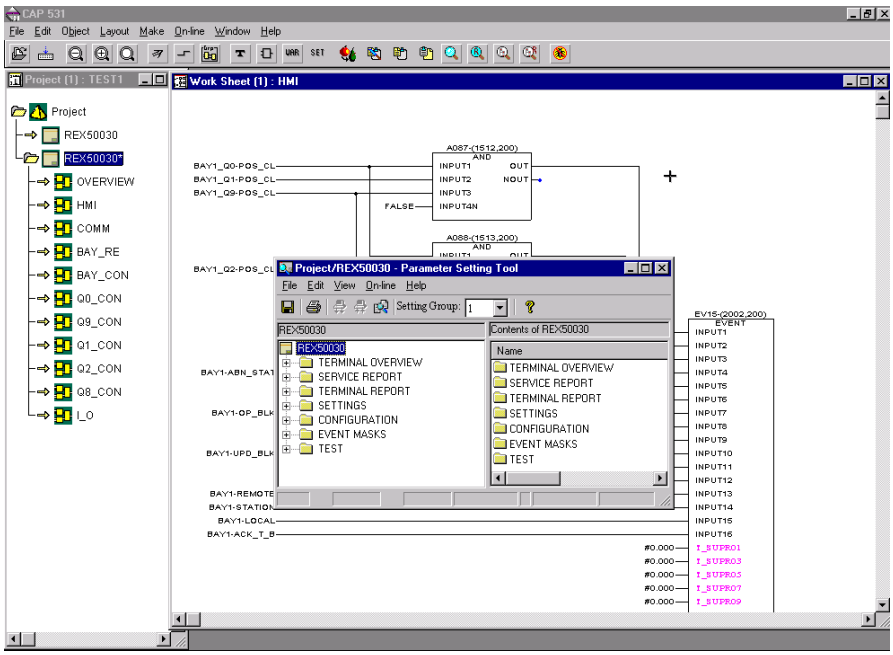

Features

- Graphical stand-alone tool package for programming, configuration and setting of REx 5xx terminals.
- Used for both protection and control terminals
- Based on international standard IEC 1131-3
- Used on a standard PC with MS Windows
- Provides a graphical overview of the terminals' internal connections
- User-friendly navigation
- Automatic down-loading of the configurations directly to the terminal for safe engineering work
- Direct documentation of the configuration
- Easy to change default configuration
- Timers and user-defined names are programmed directly in the configuration
- Monitoring all internal signals on-line facilitates commissioning

Application

The tool package CAP 535 contains these programming, configuration and setting tools and libraries for a range of protection and control terminals:

- CAP 531*1.5; configuration and programming tool
- Configuration library for terminal REx 5xx*2.0, 2.1, 2.2, 2.3 and 3.0
- Configuration library for terminal RET 521*2.1, 2.3 and 3.0
- PST Parameter Setting Tool, ver 1.1
- Parameter setting library for terminal REx 5xx*2.0, 2.1, 2.2, 2.3 and 3.0
- Parameter setting library for terminal RET 521*2.1, 2.3 and 3.0

The package also contains the User's Manuals for the tools in pdf-format and Acrobat Reader to view the manuals.

CAP 535 is used through all stages of a project, from engineering, configuring, programming and setting to testing, commissioning, documentation and maintenance. You can use it to adjust the default configuration, or to make a new configuration.

The engineering work is done off-line in the PC. The configuration is prepared and tested before the commissioning.

The default configuration in the terminals are easily adapted to the customer's needs. The configuration consists of function blocks, logic gates and timers. The functions blocks included in a terminal are available in a library of functions, where the engineer can pick a function and connect it according to the requirements.

CAP 531 offers a compilation check to help the engineer to make a correct configuration.

The monitoring function provides an on-line check of all internal signals in a 500-terminal. It offers a window into the terminal, where the commissioner can see all changes in signal status. With this tool, the commissioner obtains a powerful help.

CAP 531 is used by the protection engineer that, for example, adapts the scheme communication logic in a line protection to the customer's requirements.

It is also used by the control system constructor that for example adapts the interlocking logic to the switchgear configuration of the station.

The configuration can be printed on a user-defined form which gives documentation of the configuration that matches the terminal completely.

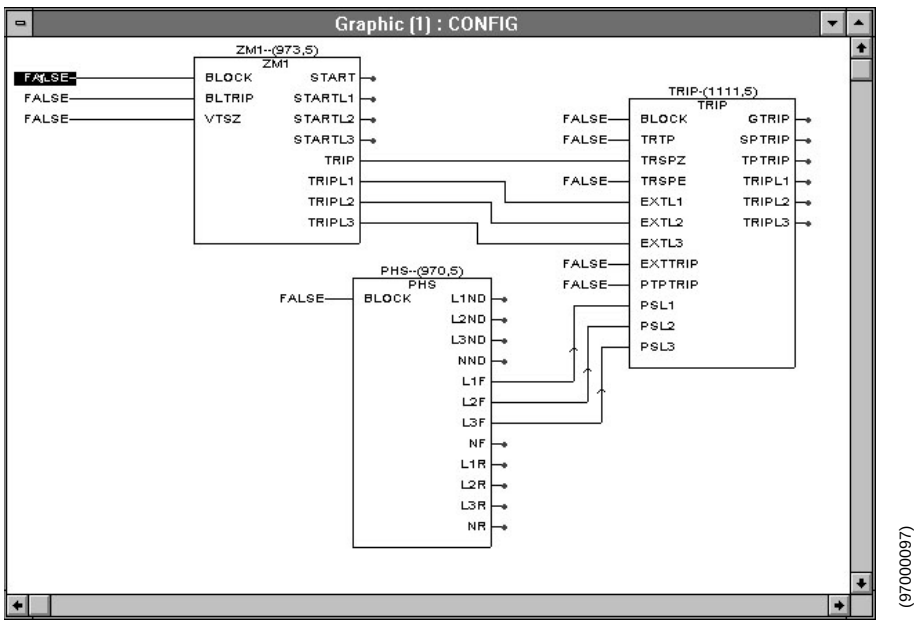

Fig. 1 Example configuration in CAP 531 of line protection terminal

The Parameter Setting Tool, PST, can be started either from the CAP 531 navigator or from within a CAP 531 worksheet. PST is mainly for managing parameters in the terminal.

You can read parameters from the terminal, edit the parameter values and write them to a terminal. You can also change parameter setting groups, compare terminal and PC-file parameters or edit your parameters in advance and write them to the terminal later when it is available.

In addition, PST offer an simple monitoring function and access to service values. The simple monitoring functionality lets you upload several power system values like currents, voltages and frequency. Service values include list of terminal events, current status of internal signals, self supervision, LED status, etc. PST can also monitor communication for the line differential function and display internal measurements from functions like the automatic reclosing function.

PST can be used for a variety of terminals (product families) with the same user interface.

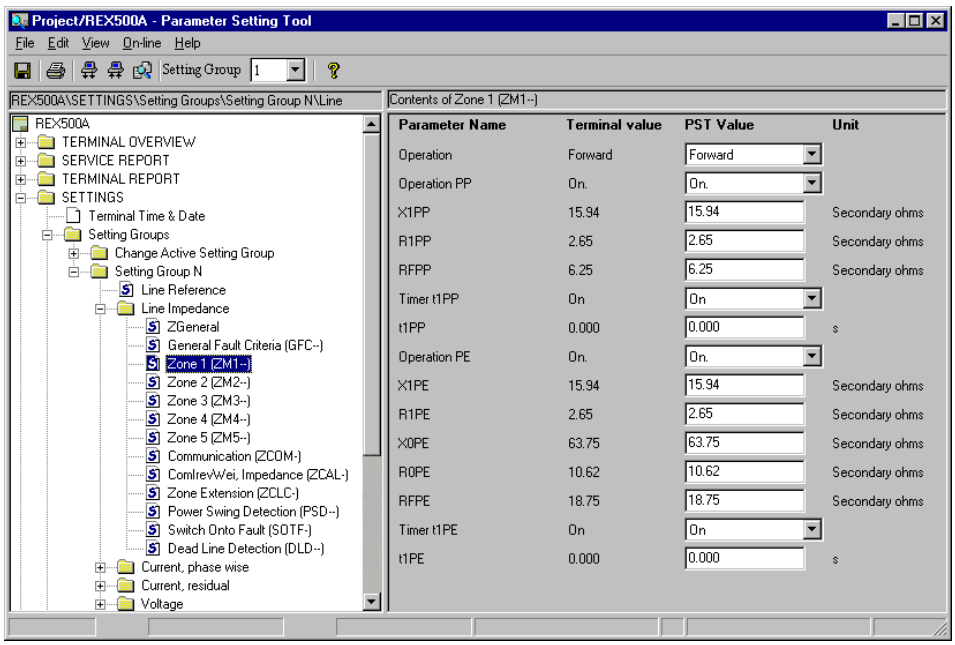

Fig. 2 Example parameter view in PST of line protection function

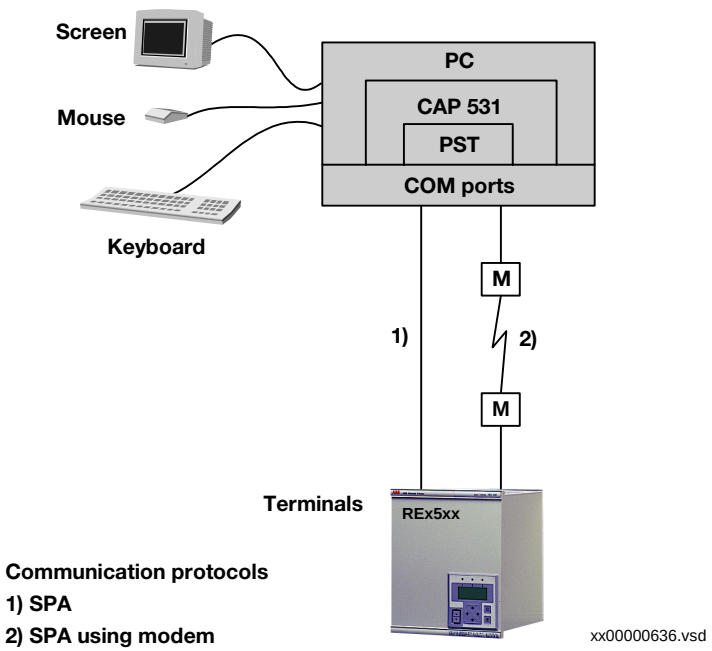

Fig. 3 Communication overview

Design

The design of the configuration tool is modular, with a base tool – CAP 531, and library modules for each type of terminal used. When a new type of terminal is used, you add the new CAP library module.

The network structure presented in the navigator is freely programmable and can also be imported from SMS.

The configuration work is facilitated by the drag-and-drop technique. Both mouse and keyboard short-cuts can be used.

When the configuration work is completed, the files are down-loaded directly into the terminal through the PC port on the front of the terminal, or through the SMS port on the rear of the terminal.

The monitoring function uses on-line communication to open up a window into the terminal. The internal signals are presented on-line with their present values (true or false) directly in the configuration work sheet. The digital value is shown with colours (red or blue) which gives excellent overview of the status of the internal signals in the terminal.

xx00000637

Fig. 4 Example of connection to the terminal

Technical data

The PC shall comply to the following recommended requirements:,

- 486 processor or higher (pentium recommended)
- 166 MHz or higher
- 64 Mb RAM or more available
- 150 Mb disk space available
- VGA compatible monitor, min. resolution 800 x 600, 256 colors
- Windows NT 4.0, 4.0, service pack 3 or higher
- CD-ROM drive, to install the tool package

Ordering

Specify:

- Type designation and ordering numbers
- Quantity
- End user of the software:
  Name, company and address

Type designation	Terminal version	Ordering No.
CAP 535*1.1	–	1MRK 001 943-AB

References

Industrial IT for the Power Industry	1MRK 500 049-SEN
Protection Monitoring and Control Solutions for Transmission Networks	1MRK 500 049-BEN
CAP 535 Broschure	1MRK 500 051-SEN

See the Buyer's Guide for each terminal in the REx 5xx series.

Manufacturer

ABB Automation Products AB
Substation Automation Division
S-721 59 Västerås
Sweden
Tel: +46 (0) 21 34 20 00
Fax: +46 (0) 21 14 69 18