Master Copy

INSTALLATION • OPERATION • MAINTENANCE

INSTRUCTIONS

TYPE TK TIMING RELAY

CAUTION Before putting relays into service, remove all blocking which may have been inserted for the purpose of securing the parts during shipment, make sure that all moving parts operate freely, inspect the contacts to see that they are clean and close properly, and operate the relay to check the settings and electrical connections.

APPLICATION

The Type TK Relay is an a-c timing relay for applications requiring a definite time delay between the closing of an a-c circuit and the closing or opening of other d-c or a-c circuits. Accurate time-settings from two seconds to fifty minutes can be obtained, and, for any setting, the reset time is less than one second.

The relay is used where time delay is required in motor, generator, rectifier, voltage regulator or tap changing transformer control circuits. It is also widely used in industrial applications.

One style of the relay is available for use with a d-c or a-c inverter where a reliable a-c control voltage is not available. The inverter is covered in I.L. 41-545.

CONSTRUCTION AND OPERATION

The type TK relay consists of a synchronous motor, a gear train to provide three different ratios, a clutch interposed in the gear train to permit quick resetting when the relay is de-energized, a contactor which carries the main contacts and operates the clutch, and a tripping mechanism adjustable for time-delay.

Synchronous Motor

The motor for driving the gear train is located on the back plate of the gear train assembly in the lower right-hand corner. It runs at a synchronous speed of 600, 500 or 250 R.P.M. for 60, 50 or 25 cycle relays respectively. Its bearing has an oil reservoir with sufficient capacity for several years of normal operation. On relays rated at 230 or higher, the contactor coil has a tap brought out at the proper place to act as an auto-transformer to supply 115 volts for the motor.

Gear Train and Clutch

The gear train is assembled as a separate unit and consists of two brass bearing plates fastened together at the corners by brass posts. The gear shafts run at low speeds and require no lubrication. The three different speeds are obtained by changing the location of a sliding gear assembly. This assembly consists of two gears on a hub that is free to slide on the clutch shaft and can be locked in any desired position with a set screw. The hub is moved to the position where the larger gear is opposite the arrow on the index plate corresponding to the desired time scale.

The clutch is two aluminum disc with serrated faces, arranged so that they are positively engaged and disengaged by a spring arm on the contactor armature when the latter is in its closed and open positions respectively. The rear disc is fastened to a shaft on the gear train. The front disc is a running fit on the end of the same shaft. The latter disc has fastened to it the pinion which drives the tripping mechanism. When the relay is energized, the clutch discs engage and power is transmitted from the motor, through the gear

train, to the tripping mechanism. When the relay is de-energized, the clutch discs are separated by the opening of the contactor armature.

Contactor

The contactor is a clapper type element with a E shaped magnetic frame with a solenoid coil on the center leg. The moving armature is hinged at the bottom of the magnetic frame, and held open by a spring below the hinge. A spring arm is fastened to the top center of the armature, and its outer end presses against the front half of the clutch when the contactor coil is energized. The position of this arm is controlled by an adjusting screw on a bracket fastened to the front of the armature.

Two contact fingers are pivoted at the lower end of the armature and each is free to move independently of the armature against a spiral spring. Silver contacts are fastened near the top ends of the fingers. The stationary contact arms have silver contact surfaces on the outer ends, and are fastened to terminal posts in the base. The make stationary contacts are mounted on leaf springs with rigid back-up arms to limit the deflection. This construction in which both moving and stationary contact arms deflect slightly, when contact is made, minimizes the possibility of the contacts opening momentarily under severe shock. The break stationary contact arms are leaf springs with rigid supporting arms to prevent overtravel.

The motion of the armature causes the clutch discs to engage but will not close the contacts until the trip mechanism latches are released. When these latches are released and if the armature is still closed the contact arms move to the operated position by the action of the springs connecting the contact arms to the armature.

Some styles of the Type TK Relay are provided with a sealing contact to seal-in the contactor coil until the circuit is opened by an external contact or switch (such as a push button). The sealing contact is operated by an adjustable Micarta button extending from the same armature bracket which carries the adjusting screw for the clutch operating arm. This button closes a make contact mounted on top of the magnetic yoke of the contactor.

Trip Mechanism

The trip mechanism is carried on a shaft thru the top of the gear train assembly. A large gear, a circular scale and two adjustable trip discs are attached to this shaft. The large gear meshes with the pinion on the front clutch disc. The trip discs each have a small bronze index pin projecting approximately 1/32" from its edge. A hexagon headed trip screw in each disc operates one of the two latch arms which in turn releases the moving contact arms to operate the contacts. The latch arms are mounted between bracket arms extending from the gear train front plate. The arrangement is such that the inner trip disc operates only the left hand latch, while the outer trip disc operates both latch arms. The moving contact arms can operate only if the armature is closed. The trip mechanism shaft resets by the action of a spring fastened to the shaft and the gear train assembly plate. The mechanism is adjusted so that the index pins are opposite the zero on the scale plate when the trip screws in the discs have reached a point where they just raise the Micarta latch arm sufficiently to release the contact arms, the trip discs being rotated manually for this check while holding the shaft against its stop.

CHARACTERISTICS

In the 50 and 60 cycle relays the maximum time settings available for the three gear positions are 30 seconds, 5 minutes, and 50 minutes. The smallest sub-division is 1 second on the 30 second scale, 0.1 minute on the 5 minute scale, and 1 minute on the 50 minute scale.

In the 25 cycle relays the maximum time setting available for the three gear positions are 1, 10, and 100 minutes. The smallest subdivision is 2 seconds on the 1 minute scale, 0.2 minute on the 10 minute scale, 2 minutes on the 100 minute scale.

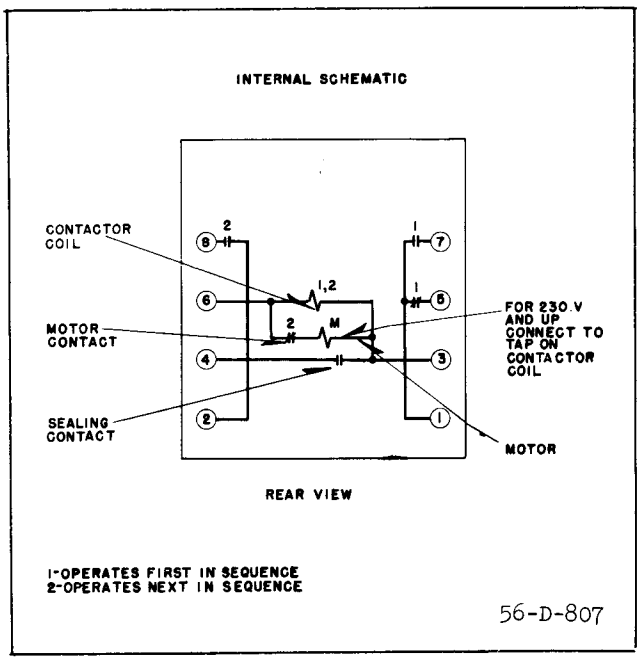

Fig. 1—Internal Wiring Diagram of the Type TK Relay with Sealing Contacts (for a-c Operation) in the 5½" Metal Case.

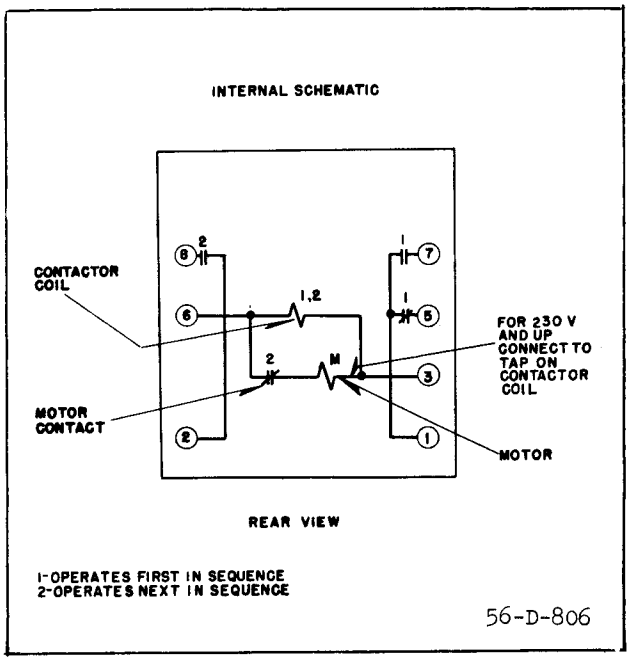

Fig. 2—Internal Wiring Diagram of the Type TK Relay Without Sealing Contacts (for a-c Operation) in the 5½" Metal Case.

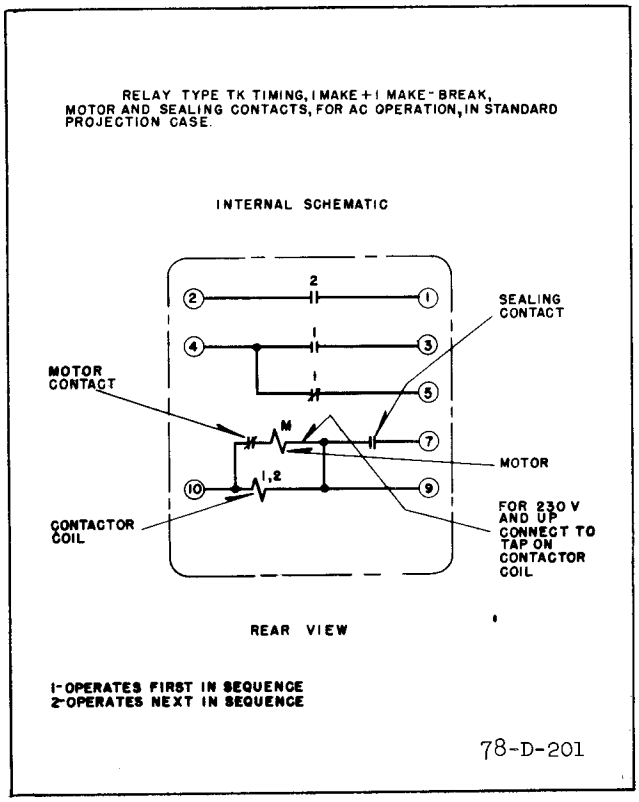

Fig. 3—Internal Wiring Diagram of the Type TK Relay With Sealing Contacts (for a-c Operation) in the Standard Case.

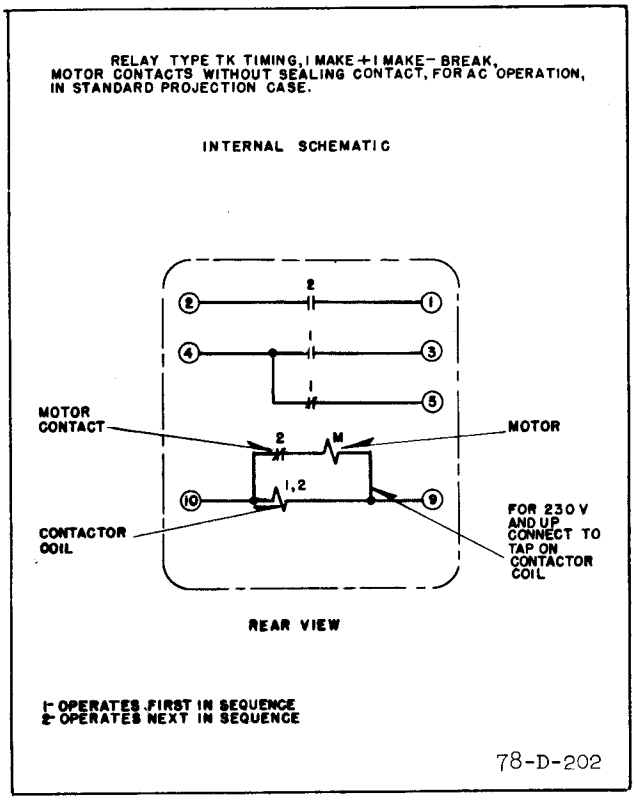

*Fig. 4—Internal Wiring Diagram of the Type TK Relay Without Sealing Contacts (for a-c Operation) in the Standard Case.

The reset time for maximum travel is less than one second. Since the clutch is disengages to reset, the reset time is independent of the position of the sliding gear assembly.

The motor may require one or two seconds to reach synchronous speed after the relay is energized and its average speed during this accelerating period will be something less than synchronous speed. The time scales on the dial make no provision for the effect the accelerating period has upon the total operating time, as this is not noticeable on the intermediate or slow speed settings. When the gears are in the high speed position, it will be more accurate to use a scale setting approximately one second less than the desired time setting. The motor will operate at 10% above or 15% under rated voltage.

The two sets of main contacts can be adjusted to operate either simultaneously or sequentially. The left hand set is single pole double throw (make & break) and the right hand set is single pole single throw (make). The right hand contact arm also operates the independent break motor circuit contact. The make contacts will carry 12 amperes continuously and 20 amperes for 1 minute. The break contact has somewhat less pressure and will carry about 2/3 this rating. The contacts will open 2 amperes at 125 volts d-c; or a non-inductive current of 20 amperes at 115 volts a-c or 15 amperes at 230 volts a-c.

A make sealing contact is supplied on some relays. When supplied it is connected as shown in figures 1, 3 and 6 to 9 and will keep the relay energized until the circuit is opened by a switch or contact external to the relay.

RELAYS IN TYPE FT CASE

The type FT cases are dust-proof enclosures combining relay elements and knife-blade test switches in the same case. This combination provides a compact flexible assembly easy to maintain, inspect, test and adjust. There are three main units of the type FT case; the case, cover, and chassis. The case is an all welded steel housing containing the hinge half of the knife-blade test switches and the terminals for external connections. The cover is a drawn steel frame with a clear window which fits over the front of the case with the switches closed. The chassis is a frame that houses the relay elements and supports the contact jaw half of the test switches. This slides in and out of the case. The electric connections between the base and chassis are completed through the closed knife-blades.

Six different size cases are available to accommodate the various relay elements and flexible terminal arrangements for either flush or projection mounting. These are designated as S10, S20, M10, M20, L10, L20. S refers to the small; M, the medium; and L, the large size chassis frame. The numbers refer to the possible number of test switch positions, 10 or 20. The type TK relay is normally supplied in an S10 case.

Removing Chassis

To remove the chassis, first remove the cover by unscrewing the captive nuts at the corners. There are two cover nuts on the S size case and four on the L and M size cases. This exposes the relay elements and all the test switches for inspection and testing. The next step is to open the test switches. Always open the elongated red handle switches first before any of the black handle switches or the cam action latches. This opens the trip circuit to prevent accidental trip out. Then open all the remaining switches. The order of opening the remaining switches is not important. In opening the test switches they should be moved all the way back against the stops. With all the switches fully opened, grasp the two cam action latch arms and pull outward. This releases the chassis from the case. Using the latch arms as handles, pull the chassis out of the case. The chassis can be set on a test bench in a normal upright position as well as on its top, back or sides for easy inspection, maintenance and test.

After removing the chassis a duplicate chassis may be inserted in the case or the blade portion of the switches can be closed and the cover put in place without the chassis.

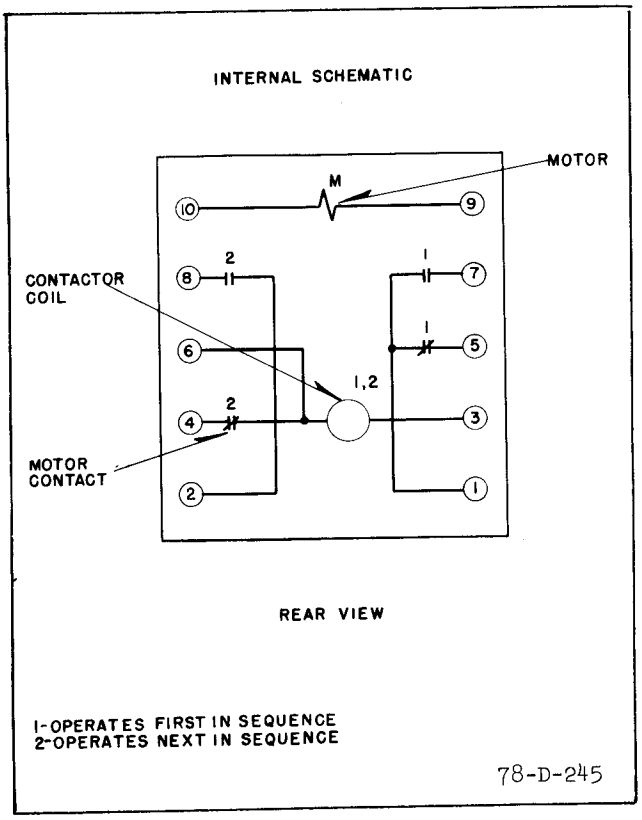

Fig. 5—Internal Wiring Diagram of the Type TK Relay Without Sealing Contacts (for d-c Operation With an Inverter) in the 5½" Metal Case.

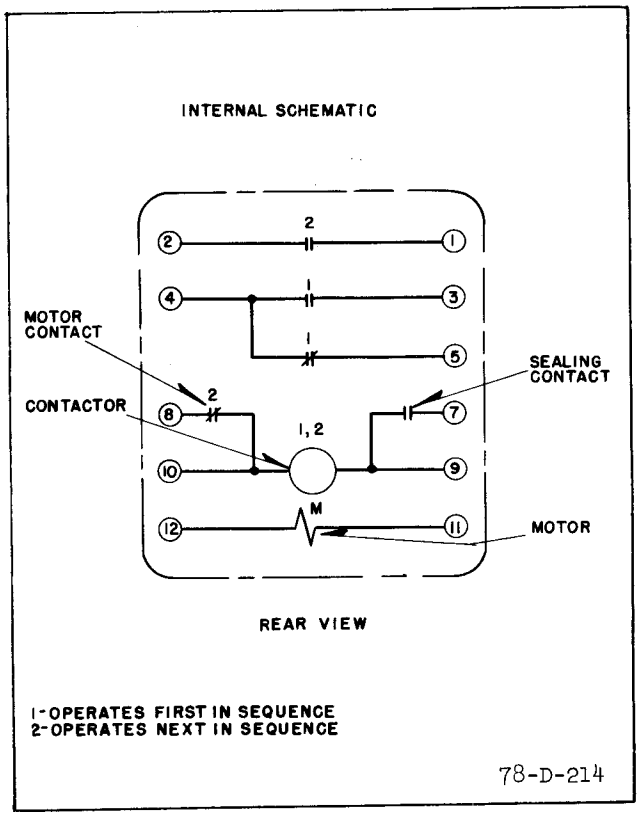

Fig. 6—Internal Wiring Diagram of the Type TK Relay With Sealing Contacts (for d-c Operation With an Inverter) in the Standard Case.

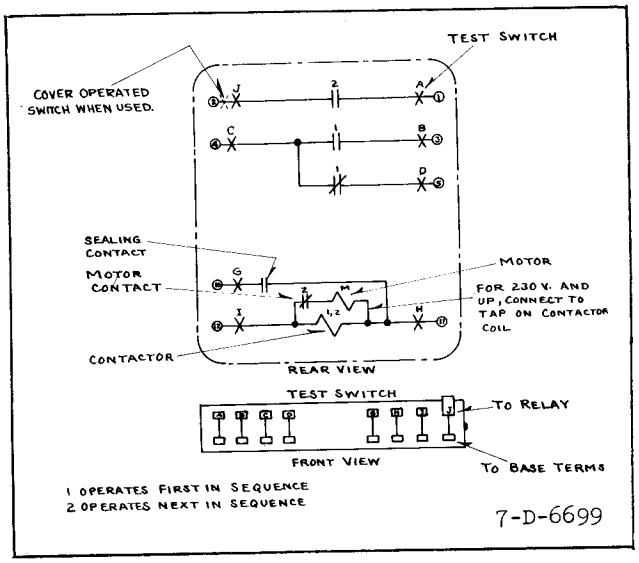

Fig. 7—Internal Schematic of the Type TK Relay With One Make, One-Make-One Break, Motor & Sealing Contacts in the Type FT Case for a-c Operation. For the Relays Without the Sealing Contacts, Omit Terminal 10 & Associated Circuits.

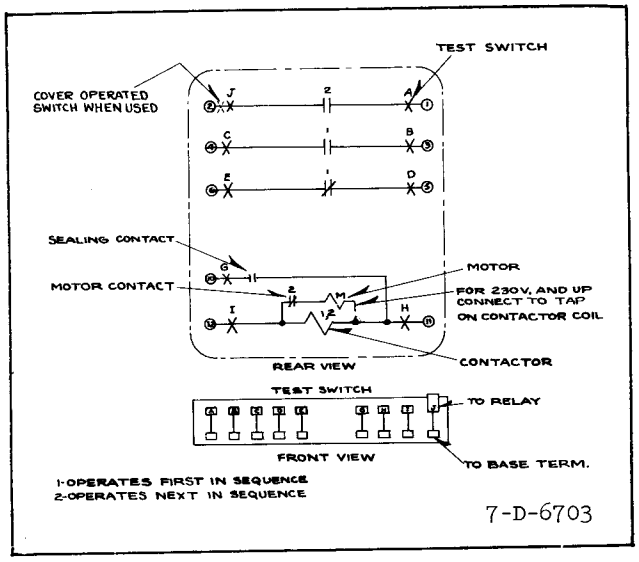

Fig. 8—Internal Schematic of the Type TK Relay With Two Make, One Break All Independent Motor & Sealing Contacts in the Type FT Case for a-c operation. For the Relays Without the Sealing Contact Omit Terminal 10 & Associated Circuits.

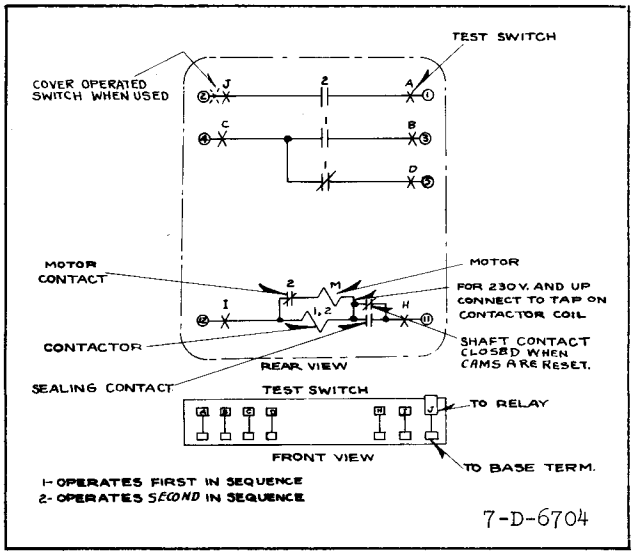

Fig. 9—Internal Schematic of the Type TK Relay With One Make, One Make-One Break, Motor & Sealing Contact With Shaft Contact to Prevent Energization Before Relay Has Reset, in the Type FT Case for a-c Operation.

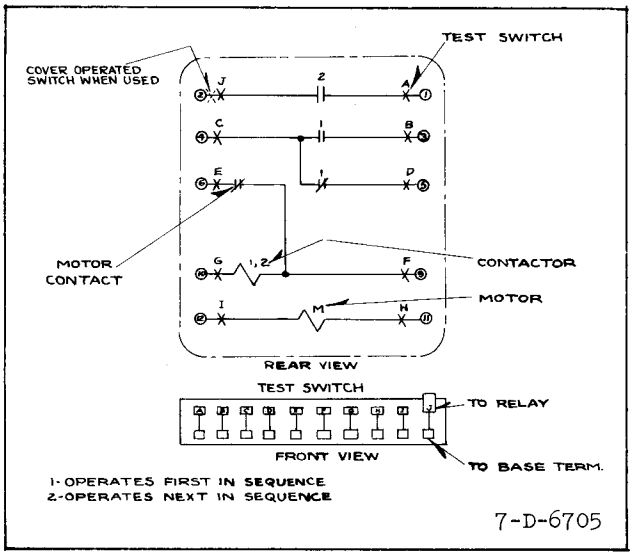

Fig. 10—Internal Schematic of the Type TK Relay With One Make, One Make-One Break, and Motor Contacts in the Type FT Case for d-c Operation With an Inverter.

When the chassis is to be put back in the case, the above procedure is to be followed in the reversed order. The elongated red handle switch should not be closed until after the chassis has been latched in place and all of the black handle switches closed.

Electrical Circuits

Each terminal in the base connects thru a test switch to the relay elements in the chassis as shown on the internal schematic diagrams. The relay terminal is identified by numbers marked on both the inside and outside of the base. The test switch positions are identified by letters marked on the top and bottom surface of the moulded blocks. These letters can be seen when the chassis is removed from the case.

The potential and control circuits thru the relay are disconnected from the external circuit by opening the associated test switches.

A cover operated switch can be supplied with its contacts wired in series with the trip circuit. This switch opens the trip circuit when the cover is removed. This switch can be added to the existing type FT cases at any time.

Testing

The relays can be tested in service, in the case but with the external circuits isolated or out of the case as follows:

Testing In Service

Voltages between the potential circuits can be measured conveniently by clamping #2 clip leads on the projecting clip lead lug on the contact jaw.

Testing In Case

With all blades in the full open position, the ten circuit test plug can be inserted in the contact jaws. This connects the relay elements to a set of binding posts and completely isolated the relay circuits from the external connections by means of an insulating barrier on the plug. The external test circuits are connected to these binding posts. The plug is inserted in the bottom test jaws with the binding posts up and in the top test switch jaws with the binding posts down.

The external test circuits may be made to the relay elements by #2 test clip leads instead of the test plug.

Testing Out of Case

With the chassis removed from the base, relay elements may be tested by using the ten circuit test plug or by #2 test clip leads as described above. The factory calibration is made with the chassis in the case and removing the chassis from the case will change the calibrating values by less than 1% - 2%. It is recommended that the relay be checked in position as a final check on the calibration.

INSTALLATION

Inspect relay for any damage that might have occured in shipment. When removing the blocking from the contactor armature, make sure that the armature has not shifted off its bearings. The armature blocking strips may be left in the relay, with the short slotted ends turned upward, for use in case of possible future shipment of the relay. Rotate the tripping disc mechanism counter-clockwise and allow to reset to make sure that it returns to zero positively. Remove the cover strip at the top of the gear case. This can be readily done by pulling aside one end of the strip which covers the sides and bottom. This strip is held against the top corner posts by a spring. When the bent-over end is clear of the top strip, the strip can be lifted off, exposing the sliding gear assembly and the gear position index plate. With the large gear on clutch shaft set opposite the 30-second mark on index plate, rotate this gear slowly in order to check for apparent friction in gear train.

The relays should be mounted on switchboard panels or their equivalent in a location free from dirt, moisture, excessive vibration and heat. Mount the relay vertically by means of the two mounting studs for the standard cases and the type FT projection case or by means of the four mounting holes on the flange for the semi-flush type FT case. Either of the studs or the mounting screws may be utilized for grounding the relay. The electrical connections may be made direct to the terminals by means of screws for steel panel mounting or to terminal studs furnished with the relay for ebony-asbestos or slate panel mounting. The terminal studs may be easily removed or inserted by locking two nuts on the studs and then turning the proper nut with a wrench. Any appreciable variation from a level position will affect the operating characteristics of the relay.

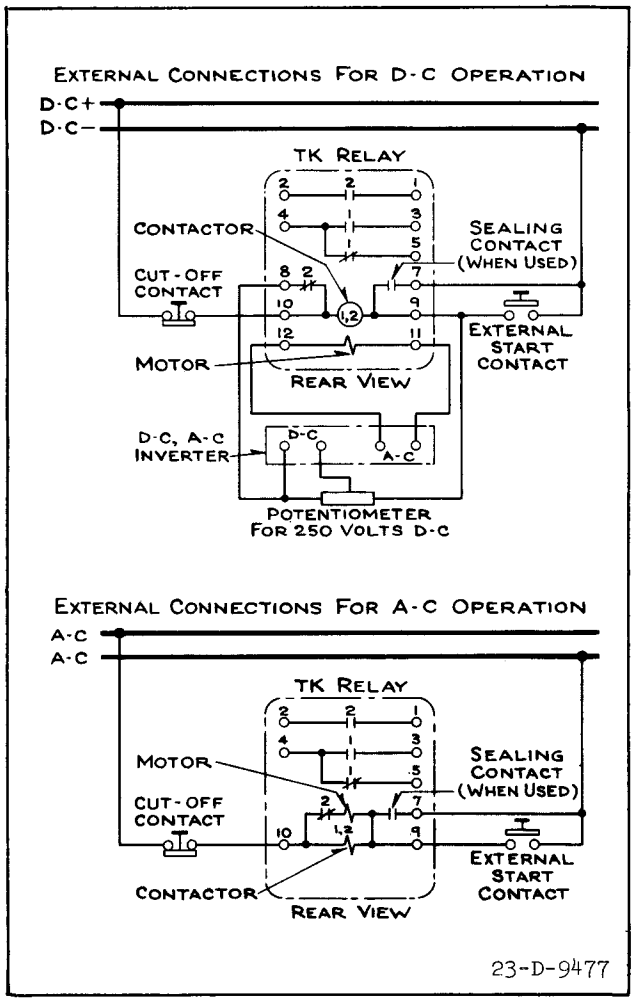

Fig. 11—Typical External Connections for the Type TK Relay in the Standard Case. (Connect Corresponding Terminals similarly for Relays in the FT Case.)

The internal and schematic external wiring diagrams are shown in figures 1 thru 11. The operation of the d-c to a-c inverter is covered in a separate instruction leaflet.

SETTINGS

The type TK Relay is set for the desired operating time by two adjustments:

1. Remove the cover strip at the top of the gear train assembly and shift the gears to the desired time scale.

In order to minimize the mechanical shock due to the quick reset, the time scale used should be the longest of the three which will permit the relay to be set for the shortest desired operating time. (See the third following paragraph).

2. Then loosen the thumb nut locking the two trip discs to the trip mechanism shaft, and rotate them until each index pin is opposite the desired scale marking. Securely tighten the thumb nut.

The disc nearest the scale plate will trip the left finger only; the disc that is nearest the front will trip both contact fingers. To set the contact fingers for sequential operation the left finger must trip first, as the motor is in series with the back contacts on the right-hand side. When this finger is tripped, it opens the motor circuit.

In making these settings the trip disc should not be rotated so that the trip pins are holding the Micarta arms part way up. Under this condition it is possible for the moving contacts to bounce under these arms and close the front contacts instantaneously when the relay is energized. The minimum settings obtainable without partially raising the latch arm are approximately 1-1/2 division on the 30 second scale, and corresponding points on the other scales.

In some applications it may be desired to have the left-hand contact operate instantaneously, as soon as the relay is energized, and have time delay on the right-hand contact only. This can be done by setting the disc nearest the scale plate so that the left-hand latch arm is raised above the end of the contact finger when the trip discs are reset. If any time-delay is desired, however, the minimum setting obtainable without the possibility of erratic operation is the point at which the trip disc begins to raise the latch arm.

ADJUSTMENTS AND MAINTENANCE

The proper adjustments to insure correct operation of this relay have been made at the

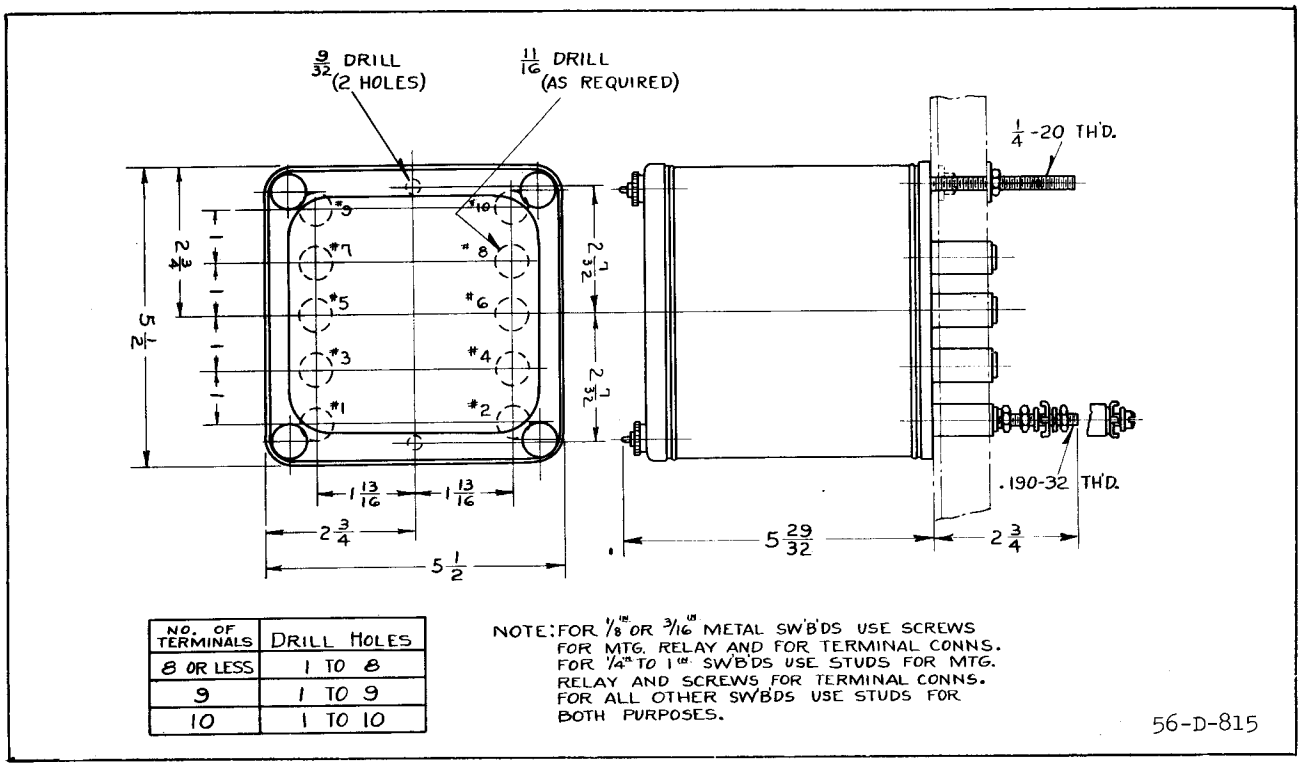

NO. OF TERMINALS	DRILL HOLES
8 OR LESS	1 TO 8
9	1 TO 9
10	1 TO 10

Fig. 12—Outline and Drilling Plan for the 5½" Metal Case With a Glass Front. See the Internal Diagrams for the Terminals Supplied. For Reference Only.

factory and should not be disturbed after receipt by the customer. If the adjustments have been changed, the relay taken apart for repairs, or if it is desired to check the adjustments at regular maintenance periods, instructions below should be followed.

Synchronous Motor

The motor bearing contains a supply of lubricant sufficient for several years of service under average conditions. Since in general application of the relays, some may be required to operate at an ambient temperature of -30° or -40° F, and others may be required to operate at an ambient temperature of over 100° F, a special oil is used which retains sufficient fluidity at low temperatures and does not oxidize or deteriorate otherwise at high temperatures. For relubrication of the motor after a period of service, this oil is supplied in 1 ounce bottles as S#1723639. Because of the close tolerances held in manufacture, no attempt should be made to repair the motor in case of damage. It should be returned to the factory for repair or a complete new motor ordered as a replacement.

Gear Train & Clutch

The gear train shafts run at low speeds and require no lubrication. The mesh of the gear teeth on the sliding gear assembly of tne clutch shaft should be inspected and the hub shifted slightly if necessary to secure a full mesh. Then tighten the set screw securely.

When the armature is held closed, the clutch teeth should have a full mesh and there should be 1/32" to 3/64" follow on the clutch spring. Any necessary adjustment should be made by means of the lower screw in the bracket of the front of the armature, and the lock nut should be securely tightened. One-quarter turn of the adjusting screw, after the clutch is closed and with the operating spring just touching the clutch pinion without deflection, will give about 1/32" follow on the spring. When the armature is released, the clutch teeth should have sufficient separation to prevent any interference with resetting of the trip discs. Too much follow on the clutch spring will prevent the clutch from being held open positively when the relay is de-energized.

If the relay operates very frequently, remains energized for long periods, or is installed where the ambient temperature is high, a small drop of the same oil that is recommended for relubrication of the motor should be applied to the clutch pinion bearing at intervals of six months to one year. It can be applied by dipping a small wire into the oil and touching this to the clutch shaft between the two clutch discs. A very small amount of oil is sufficient. A drop of oil may be applied to the teeth of the clutch pinion at the same time.

The shaft assembly on which the tripping discs are mounted is assembled so that its reset spring has approximately 1-1/4 turns initial tension with the shaft fully reset, and the shaft should be reassembled in this manner after any dismantling.

Trip Mechanism

The die-case bracket which supports the latch arm assembly is secured to the front gear plate by means of screws passing through slotted holes. To adjust the position of this bracket, loosen both the mounting screws and the screw which holds the stop bracket for the right hand (front view) latch arm. Move the sliding gear assembly out of mesh, so that the trip discs will not rotate, and energize the relay. The latch arms should be down so that the contact fingers are held out. Shift the die-case bracket so that with the latch arms touching the aluminum trip discs (not the trip screws), the projection of the end of the latch arm above the top of its adjacent contact finger will be .075 inch for the left-hand finger and .070 inch for the right-hand finger. The dimensions given apply to relays in which the trip discs are 1-1/8 inch in diameter. Earlier relays used discs with a diameter of 1-3/16 inch and on these the dimensions should be .010 inch for the left-hand finger and .120 inch for the right-hand finger. A small strip of metal with the ends

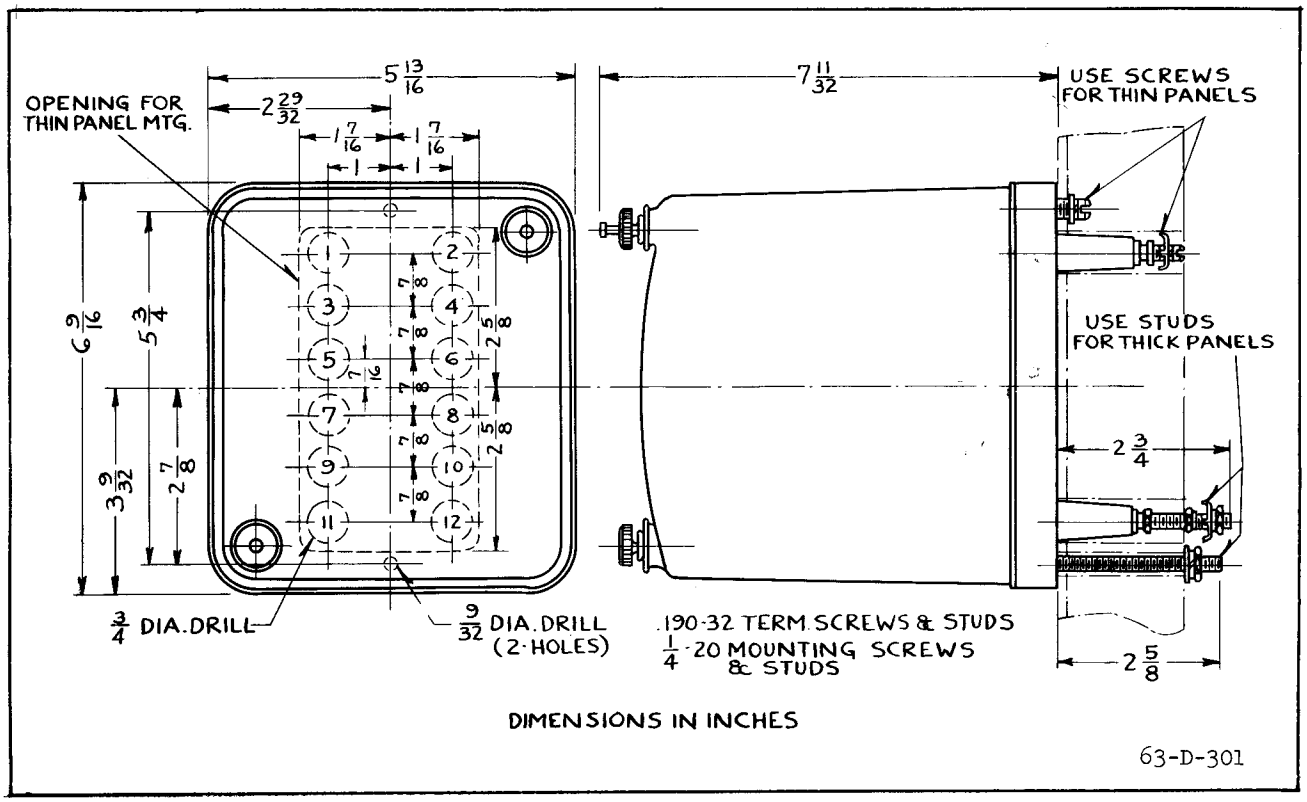

Fig. 13—Outline and Drilling Plan for the Standard Projection Type Case. See the Internal Diagrams for the Terminals Supplied. For Reference Only.

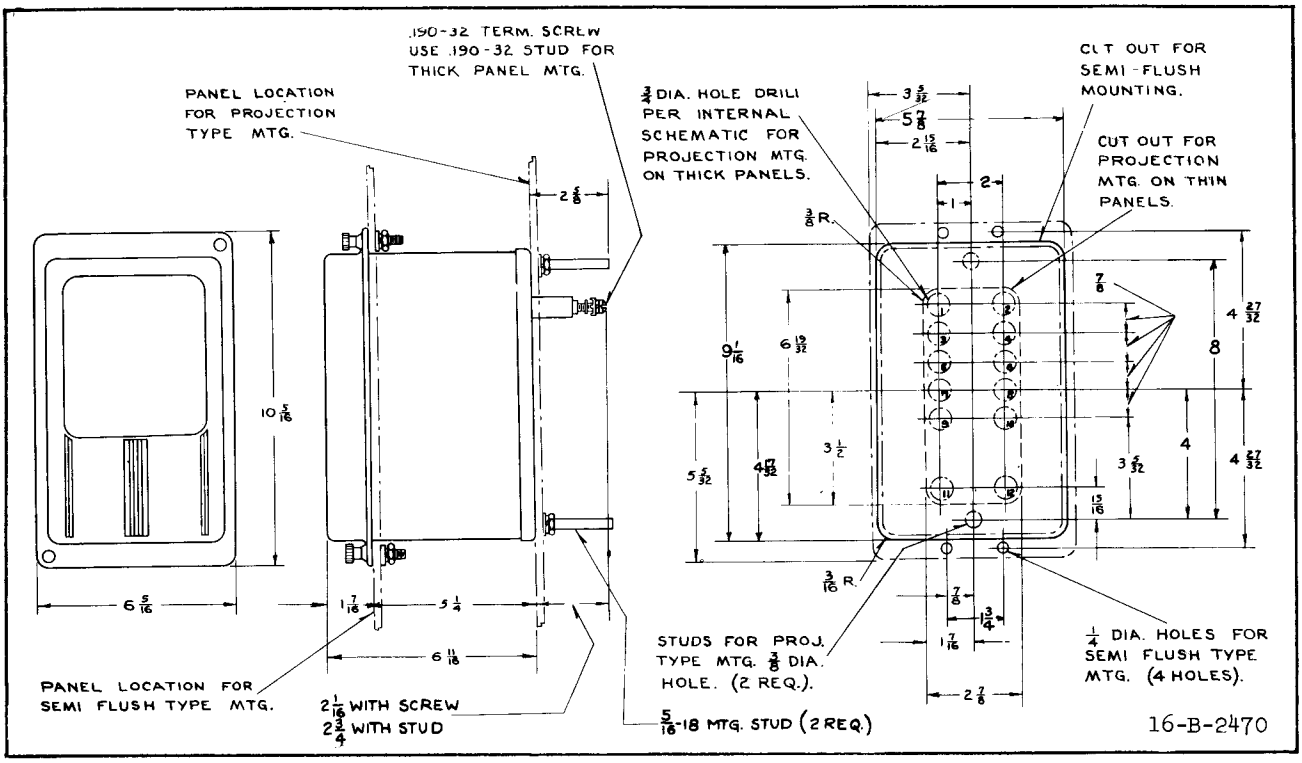

Fig. 14—Outline and Drilling Plan for the S10 Semi-flush Type Flexitest Case. See the Internal Schematics for the Terminals Supplied. For Reference Only.

filed to these dimensions will be convenient to use as a gauge. It can be rested on the ends of the contact fingers and the bracket shifted until the upper front corners of the fingers are even with the ends of the gauge. The mounting screws for the bracket should then be tightened securely. The screw for the right-hand latch arm stop bracket should be tightened and the bracket should be bent up or down until the latch arms just clear the small bronze index pins projecting from the trip disc.

Raise the right-hand latch with the fingers and move the armature in by hand until the tips of the contact fingers are opposite the lowest portions of the latch arms. When the left-hand latch arm is just touching its contact finger, there should be a gap of about .010" to .015 inch between the right-hand arm and its contact finger. (This relation between the latches and the contact fingers prevents any possibility of the left-hand finger tripping first when the trip discs are set for simultaneous tripping).

Loosen the thumb nut locking the two trip discs and energize the relay with the gears still out of mesh. Hold the final gear firmly against its back stop, and rotate each trip disc by hand until it depresses its latch arm far enough to just trip the contact finger. The bronze pin projecting from each trip disc serves as its zero index, and should be opposite the zero on the dial when the contact finger trips. The trip screws are prevented from turning by a locking wire spring which passes through a slot in the inner end of the trip screw and is accessible from the rear of the trip disc. It should be moved out of the slot, and the trip screw should be screwed in or out until the index pin is opposite the zero on the dial when the contact finger is released. Then the locking spring should be placed in the slot of its trip screw to prevent any accidental change in adjustment. The trip discs should release the contact fingers when the trip screws are one scale division or more from the center or lowest position.

Repeated tests have shown that the relay will make more than one million operations before the striking and rubbing action of the contact fingers on the ends of the latch arms wears them sufficiently to require replacement.

Contactor

All contacts should be periodically cleaned with a fine file. S#1002110 file is recommended for this purpose. The use of abrasive material for cleaning contacts is not recommended because of the danger of embedding small particles in the face of the soft silver and thus impairing the contact.

The stationary contacts should be adjusted by bending so that both moving contacts make simultaneously when they move in with the armature, with about 1/16 inch follow. With the relay de-energized, adjust the position of the left-hand back contact spring, by means of the adjusting screw so that there will be a gap of 1/64 inch or slightly more, between the ends of the latch arms and the contact fingers. Tighten the lock nut securely. The gaps between the contact fingers and the ends of the latch arms should be approximately equal. If the gaps are unequal, the contact fingers probably have been bent. When the relay is de-energized and the front clutch member is at the limit of its outward travel there should be a slight clearance between the clutch spring and the washer at the front of the clutch pinion. There should also be clearance between the clutch spring and the dial plate.

The motor circuit contact should have 1/16 inch to 3/32 inch follow when the right-hand contact finger is against the latch arm. When the motor circuit is open, there should be no gap between the rear contact spring (in which the flat contact is assembled) and its stop plate.

On relays provided with a sealing contact, adjust the upper screw in the bracket at the front of the armature so that there will be 1/32 inch to 3/64 inch follow in the seal-in

contact after it has closed. Tighten the lock nut securely. When the relay is de-energized the seal-in contact should have 1/32 inch to 3/64 inch gap.

RENEWAL PARTS

Repair work can be done most satisfactorily at the factory. However, interchangeable parts can be furnished to the customers who are equipped for doing repair work. When ordering parts, always give the complete name-plate data.

ENERGY REQUIREMENTS

The burden of the Type TK Relay at 115 volts, 60 cycles is as follows:

Circuit	Continuous Volt Rating	Watts	Reactive V.A.	Volt-Amps.	P.F.
Motor	115	1.8	1.73	2.5	44° Lag
Contactor	115	11.5	14.5	18.5	51° Lag

The burdens at the other 60 cycle voltage ratings will be approximately the same as above.

WESTINGHOUSE ELECTRIC CORPORATION
METER DIVISION **NEWARK, N.J.**
Printed in U.S.A.